AUTHENTICATED
U.S. GOVERNMENT
INFORMATION
GPO

FEDERAL REGISTER

Vol. 81 Monday,
No. 219 November 14, 2016

Pages 79381–79990

OFFICE OF THE FEDERAL REGISTER

The **FEDERAL REGISTER** (ISSN 0097–6326) is published daily, Monday through Friday, except official holidays, by the Office of the Federal Register, National Archives and Records Administration, Washington, DC 20408, under the Federal Register Act (44 U.S.C. Ch. 15) and the regulations of the Administrative Committee of the Federal Register (1 CFR Ch. I). The Superintendent of Documents, U.S. Government Publishing Office, Washington, DC 20402 is the exclusive distributor of the official edition. Periodicals postage is paid at Washington, DC.

The **FEDERAL REGISTER** provides a uniform system for making available to the public regulations and legal notices issued by Federal agencies. These include Presidential proclamations and Executive Orders, Federal agency documents having general applicability and legal effect, documents required to be published by act of Congress, and other Federal agency documents of public interest.

Documents are on file for public inspection in the Office of the Federal Register the day before they are published, unless the issuing agency requests earlier filing. For a list of documents currently on file for public inspection, see *www.ofr.gov.*

The seal of the National Archives and Records Administration authenticates the Federal Register as the official serial publication established under the Federal Register Act. Under 44 U.S.C. 1507, the contents of the **Federal Register** shall be judicially noticed.

The **Federal Register** is published in paper and on 24x microfiche. It is also available online at no charge at *www.fdsys.gov*, a service of the U.S. Government Publishing Office.

The online edition of the **Federal Register** is issued under the authority of the Administrative Committee of the Federal Register as the official legal equivalent of the paper and microfiche editions (44 U.S.C. 4101 and 1 CFR 5.10). It is updated by 6:00 a.m. each day the **Federal Register** is published and includes both text and graphics from Volume 59, 1 (January 2, 1994) forward. For more information, contact the GPO Customer Contact Center, U.S. Government Publishing Office. Phone 202-512-1800 or 866-512-1800 (toll free). E-mail, *gpocusthelp.com.*

The annual subscription price for the **Federal Register** paper edition is $749 plus postage, or $808, plus postage, for a combined **Federal Register, Federal Register** Index and List of CFR Sections Affected (LSA) subscription; the microfiche edition of the **Federal Register** including the **Federal Register** Index and LSA is $165, plus postage. Six month subscriptions are available for one-half the annual rate. The prevailing postal rates will be applied to orders according to the delivery method requested. The price of a single copy of the daily **Federal Register,** including postage, is based on the number of pages: $11 for an issue containing less than 200 pages; $22 for an issue containing 200 to 400 pages; and $33 for an issue containing more than 400 pages. Single issues of the microfiche edition may be purchased for $3 per copy, including postage. Remit check or money order, made payable to the Superintendent of Documents, or charge to your GPO Deposit Account, VISA, MasterCard, American Express, or Discover. Mail to: U.S. Government Publishing Office—New Orders, P.O. Box 979050, St. Louis, MO 63197-9000; or call toll free 1-866-512-1800, DC area 202-512-1800; or go to the U.S. Government Online Bookstore site, see *bookstore.gpo.gov.*

There are no restrictions on the republication of material appearing in the **Federal Register.**

How To Cite This Publication: Use the volume number and the page number. Example: 81 FR 12345.

Postmaster: Send address changes to the Superintendent of Documents, Federal Register, U.S. Government Publishing Office, Washington, DC 20402, along with the entire mailing label from the last issue received.

SUBSCRIPTIONS AND COPIES

PUBLIC

Subscriptions:

Paper or fiche	**202–512–1800**
Assistance with public subscriptions	**202–512–1806**
General online information	**202–512–1530; 1–888–293–6498**

Single copies/back copies:

Paper or fiche	**202–512–1800**
Assistance with public single copies	**1–866–512–1800 (Toll-Free)**

FEDERAL AGENCIES

Subscriptions:

Assistance with Federal agency subscriptions:

Email	*FRSubscriptions@nara.gov*
Phone	**202–741–6000**

Printed on recycled paper.

Contents

Federal Register

Vol. 81, No. 219

Monday, November 14, 2016

Agriculture Department
See Food and Nutrition Service

Centers for Disease Control and Prevention
NOTICES
Agency Information Collection Activities; Proposals, Submissions, and Approvals, 79488–79489

Centers for Medicare & Medicaid Services
RULES
Medicare Program:
Hospital Outpatient Prospective Payment and Ambulatory Surgical Center Payment Systems and Quality Reporting Programs; Organ Procurement Organization Reporting and Communication; Transplant Outcome Measures and Documentation Requirements; etc., 79562–79892
NOTICES
Medicare and Medicaid Programs:
Quarterly Listing of Program Issuances—July through September 2016, 79489–79501

Children and Families Administration
NOTICES
Agency Information Collection Activities; Proposals, Submissions, and Approvals:
Comprehensive Child Welfare Information System, 79501

Civil Rights Commission
NOTICES
Meetings; Sunshine Act, 79413

Coast Guard
RULES
Drawbridge Operations:
Great Channel, New Jersey Intracoastal Waterway, Stone Harbor, NJ, 79393

Commerce Department
See Economic Development Administration
See Economics and Statistics Administration
See Foreign-Trade Zones Board
See International Trade Administration
See National Institute of Standards and Technology
See National Oceanic and Atmospheric Administration
See Patent and Trademark Office

Commodity Futures Trading Commission
NOTICES
Meetings, 79463

Defense Department
NOTICES
Privacy Act; Systems of Records, 79463–79464

Drug Enforcement Administration
RULES
Schedules of Controlled Substances:
Temporary Placement of U–47700 into Schedule I, 79389–79393

Economic Development Administration
PROPOSED RULES
Revolving Loan Fund Program and Public Works and Economic Development Act:
Public Meeting, 79394

Economics and Statistics Administration
NOTICES
Requests for Nominations:
Commerce Data Advisory Council, 79413–79414

Education Department
NOTICES
Agency Information Collection Activities; Proposals, Submissions, and Approvals, 79465–79466
Agency Information Collection Activities; Proposals, Submissions, and Approvals:
Application for Grants under the Upward Bound Math and Science Program, 79464–79465
William D. Ford Federal Direct Loan Program Repayment Plan Selection Form, 79466

Energy Department
See Federal Energy Regulatory Commission

Federal Aviation Administration
RULES
Airworthiness Directives:
Bombardier, Inc. Airplanes, 79381–79384
The Boeing Co. Airplanes, 79384–79389
PROPOSED RULES
Airworthiness Directives:
The Boeing Co. Airplanes, 79395–79400

Federal Communications Commission
RULES
Use of Spectrum Bands above 24 GHz for Mobile Radio Services, 79894–79945
PROPOSED RULES
Radio Broadcasting Services:
Mullin, TX, 79407–79408
NOTICES
Agency Information Collection Activities; Proposals, Submissions, and Approvals, 79471–79473

Federal Deposit Insurance Corporation
NOTICES
Meetings:
Sunshine Act, 79473

Federal Energy Regulatory Commission
NOTICES
Combined Filings, 79466–79467, 79470–79471
Environmental Reviews:
Moriah Hydro Corp., 79468–79469
Filings:
East Texas Electric Cooperative, Inc., 79467–79468
Initial Market-Based Rate Filings Including Requests for Blanket Section 204 Authorizations:
Beacon Solar 3, LLC, 79470

Meetings:
Utilization in the Organized Markets of Electric Storage Resources as Transmission Assets Compensated through Transmission Rates, for Grid Support Services Compensated in Other Ways, and for Multiple Services, 79469–79470
Petitions for Enforcement:
Otter Creek Solar LLC, Allco Finance Ltd., and PLH LLC, 79467

Federal Financial Institutions Examination Council
NOTICES
Uniform Interagency Consumer Compliance Rating System, 79473–79483

Federal Motor Carrier Safety Administration
NOTICES
Hours of Service of Drivers; Exemption Applications:
Specialized Carriers and Rigging Association; FAST Act Extension of Expiration Date, 79556–79557
Trailways Companies; FAST Act Extension of Expiration Date, 79556
Qualification of Drivers; Exemption Applications:
Diabetes Mellitus, 79554–79556

Federal Reserve System
NOTICES
Agency Information Collection Activities; Proposals, Submissions, and Approvals, 79483–79487
Changes in Bank Control:
Acquisitions of Shares of a Bank or Bank Holding Company, 79484
Formations of, Acquisitions by, and Mergers of Bank Holding Companies, 79487

Federal Trade Commission
NOTICES
Agency Information Collection Activities; Proposals, Submissions, and Approvals, 79487–79488

Fish and Wildlife Service
RULES
Management of Non-Federal Oil and Gas Rights, 79948–79981
PROPOSED RULES
Management of Non-Federal Oil and Gas Rights, 79408–79409
NOTICES
Endangered and Threatened Species:
Final Recovery Plan for the Laurel Dace, 79515–79516
Environmental Assessments; Availability, etc.:
National Elk Refuge, Teton County, WY, 79516–79517

Food and Drug Administration
PROPOSED RULES
Public Disclosure of Certain Data and Information Related to Human Gene Therapy or Xenotransplantation and Crabmeat; Withdrawal, 79400
NOTICES
Agency Information Collection Activities; Proposals, Submissions, and Approvals:
Biological Products: Reporting of Biological Product Deviations and Human Cells, Tissues, and Cellular and Tissue-Based Deviations in Manufacturing, 79504–79506
Debarment Orders:
Edward Manookian (Also Known as Ed Manning), 79501–79502
Guidance for Industry:
Voluntary Qualified Importer Program, 79502–79504

Food and Nutrition Service
NOTICES
Agency Information Collection Activities; Proposals, Submissions, and Approvals:
Supplemental Nutrition Assistance Program; Operating Guidelines, Forms and Waivers, 79411–79413

Foreign-Trade Zones Board
NOTICES
Production Activities:
Brake Parts Inc., Foreign-Trade Zone 176, Rockford, IL, 79415
Reorganizations under Alternative Site Framework:
Foreign-Trade Zone 110, Albuquerque, NM, 79415
Foreign-Trade Zone 261, Alexandria, LA, 79416
Subzone Approvals:
G2 LNG LLC, Subzone 291A, Cameron, LA, 79414–79415

Geological Survey
NOTICES
Meetings:
National Geospatial Advisory Committee, 79517

Health and Human Services Department
See Centers for Disease Control and Prevention
See Centers for Medicare & Medicaid Services
See Children and Families Administration
See Food and Drug Administration
See Health Resources and Services Administration
See National Institutes of Health
NOTICES
Meetings:
Secretary's Advisory Committee on National Health Promotion and Disease Prevention, 79507

Health Resources and Services Administration
NOTICES
Agency Information Collection Activities; Proposals, Submissions, and Approvals:
National Hospital Organ Donation Campaign Activity, 79506–79507

Homeland Security Department
See Coast Guard
NOTICES
Privacy Act; Computer Matching Program, 79508–79513

Housing and Urban Development Department
NOTICES
Meetings:
Manufactured Housing Consensus Committee, 79513–79514
Rental Assistance Demonstration:
Fair Housing and Civil Rights Requirements and Relocation Requirements Applicable to RAD First Component—Public Housing Conversions, 79514–79515

Interior Department
See Fish and Wildlife Service
See Geological Survey
See Land Management Bureau
See National Park Service

International Trade Administration
NOTICES
Antidumping or Countervailing Duty Investigations, Orders, or Reviews:
Aluminum Extrusions from the People's Republic of China, 79444–79446
Corrosion-Resistant Steel Products from the People's Republic of China, 79454–79458
Dioctyl Terephthalate from the Republic of Korea, 79435
Steel Wire Garment Hangers from the People's Republic of China, 79435–79437
Determinations of Sales at Less than Fair Value:
Certain Carbon and Alloy Steel Cut-To-Length Plate from Austria, 79416–79419
Certain Carbon and Alloy Steel Cut-To-Length Plate from Belgium, 79431–79434
Certain Carbon and Alloy Steel Cut-To-Length Plate from France, 79437–79441
Certain Carbon and Alloy Steel Cut-To-Length Plate from Italy, 79423–79427
Certain Carbon and Alloy Steel Cut-To-Length Plate from Japan, 79427–79431
Certain Carbon and Alloy Steel Cut-To-Length Plate from Taiwan, 79420–79423
Certain Carbon and Alloy Steel Cut-To-Length Plate from the Federal Republic of Germany, 79446–79450
Certain Carbon and Alloy Steel Cut-To-Length Plate from the People's Republic of China, 79450–79454
Certain Carbon and Alloy Steel Cut-To-Length Plate from the Republic of Korea, 79441–79444

International Trade Commission
NOTICES
Investigations; Determinations, Modifications, and Rulings, etc.:
Certain Mobile Device Holders and Components Thereof, 79519–79521
Meetings; Sunshine Act, 79519

Justice Department
See Drug Enforcement Administration
NOTICES
Consent Decrees:
Proposed Consent Decrees under CERCLA, 79521

Labor Department
See Mine Safety and Health Administration

Land Management Bureau
NOTICES
Plats of Surveys:
Colorado, 79517–79518

Mine Safety and Health Administration
NOTICES
Petitions for Modifications:
Applications of Existing Mandatory Safety Standards, 79521–79523

National Archives and Records Administration
NOTICES
Meetings:
Advisory Committee on the Records of Congress, 79525
Records Schedules, 79523–79525

National Council on Disability
NOTICES
Meetings; Sunshine Act, 79525

National Highway Traffic Safety Administration
NOTICES
Petitions for Decisions of Inconsequential Noncompliance:
Goodyear Tire and Rubber Company, 79557–79558
Mercedes-Benz USA, LLC, 79558–79559

National Institute of Standards and Technology
NOTICES
Meetings:
Commission on Enhancing National Cybersecurity, 79459

National Institutes of Health
NOTICES
Government-Owned Inventions; Availability for Licensing, 79508
Meetings:
National Center for Advancing Translational Sciences, 79507–79508

National Mediation Board
PROPOSED RULES
Access to Information, 79400–79407

National Oceanic and Atmospheric Administration
PROPOSED RULES
Atlantic Highly Migratory Species:
Atlantic Shark Management Measures; Draft Amendment 5b, 79409–79410
NOTICES
Meetings:
Fisheries of the South Atlantic; Southeast Data, Assessment, and Review, 79462–79463
North Pacific Fishery Management Council, 79460
Pacific Fishery Management Council, 79460
Statement of Organization, Practices, and Procedures:
General Advisory Committee to the United States Section to the Inter-American Tropical Tuna Commission, 79461–79462

National Park Service
NOTICES
National Register of Historic Places:
National Register of Historic Places; Notification of Pending Nominations and Related Actions, 79518
Pending Nominations and Related Actions, 79518–79519

National Science Foundation
NOTICES
Meetings;
Sunshine Act, 79525–79526

Nuclear Regulatory Commission
NOTICES
Agency Information Collection Activities; Proposals, Submissions, and Approvals, 79530–79531
Agency Information Collection Activities; Proposals, Submissions, and Approvals:
Policy Statement for the Criteria for Guidance of States and NRC in Discontinuance of NRC Regulatory Authority and Assumption Thereof By States Through Agreement, etc., 79529–79530
Environmental Assessments; Availability, etc.:
Florida Power and Light Co., St. Lucie Plant, Unit Nos. 1 and 2, 79526–79528
Environmental Impact Statements; Availability, etc.:
Waste Control Specialists LLC, Consolidated Interim Spent Fuel Storage Facility Project, 79531–79534
Meetings; Sunshine Act, 79528–79529

Overseas Private Investment Corporation
NOTICES
Meetings; Sunshine Act, 79534

Patent and Trademark Office
NOTICES
Roundtables and Request for Comments Related to Patent Subject Matter Eligibility, 79463

Postal Regulatory Commission
NOTICES
New Postal Products, 79534

Presidential Documents
PROCLAMATIONS
Special Observances:
Veterans Day (Proc. 9539), 79987–79988
World Freedom Day (Proc. 9538), 79983–79986
ADMINISTRATIVE ORDERS
Burundi; Continuation of National Emergency (Notice of November 9, 2016), 79989

Securities and Exchange Commission
NOTICES
Agency Information Collection Activities; Proposals, Submissions, and Approvals, 79549
Applications:
The Boston Trust & Walden Funds, et al., 79548–79549
Meetings:
Equity Market Structure Advisory Committee, 79546
Sunshine Act, 79551–79552
Self-Regulatory Organizations; Proposed Rule Changes:
Bats BZX Exchange, Inc., 79550–79551
Depository Trust Co., 79543–79546
ISE Gemini, LLC, 79540–79543
NASDAQ BX, Inc., 79534–79536
NASDAQ PHLX, LLC, 79546–79548
NASDAQ Stock Market, LLC, 79536–79540

Small Business Administration
NOTICES
Disaster Declarations:
Florida, 79552
Florida; Amendment 4, 79552
Minnesota, 79552
North Carolina, 79553
North Carolina; Amendment 12, 79552–79553
Virginia, 79553

State Department
NOTICES
Delegation of Authority to the Assistant Secretary for Political-Military Affairs, 79553–79554
Designations as Foreign Terrorist Organizations:
Al-Nusrah Front (and other aliases), 79554
Designations as Global Terrorists:
Al-Nusrah Front, 79554

Transportation Department
See Federal Aviation Administration
See Federal Motor Carrier Safety Administration
See National Highway Traffic Safety Administration
NOTICES
Meetings:
Intelligent Transportation Systems Program Advisory Committee, 79559–79560

Veterans Affairs Department
NOTICES
Agency Information Collection Activities; Proposals, Submissions, and Approvals:
Application for Reinstatement—Insurance Lapsed More than 6 Months and for Reinstatement—Non Medical Comparative Health Statement, 79560

Separate Parts In This Issue

Part II
Health and Human Services Department, Centers for Medicare & Medicaid Services, 79562–79892

Part III
Federal Communications Commission, 79894–79945

Part IV
Interior Department, Fish and Wildlife Service, 79948–79981

Part V
Presidential Documents, 79983–79989

Reader Aids

Consult the Reader Aids section at the end of this issue for phone numbers, online resources, finding aids, and notice of recently enacted public laws.

To subscribe to the Federal Register Table of Contents electronic mailing list, go to https://public.govdelivery.com/accounts/USGPOOFR/subscriber/new, enter your e-mail address, then follow the instructions to join, leave, or manage your subscription.

CFR PARTS AFFECTED IN THIS ISSUE

A cumulative list of the parts affected this month can be found in the Reader Aids section at the end of this issue.

3 CFR

Proclamations:

9538 79985
9539 79987

Administrative Orders:

Notices:
Notice of November 9, 2016 79989

13 CFR

Proposed Rules:

300 79394
301 79394
302 79394
303 79394
304 79394
305 79394
307 79394
309 79394
314 79394

14 CFR

39 (2 documents) 79381, 79384

Proposed Rules:

39 79395

21 CFR

1308 79389

Proposed Rules:

1 79400

29 CFR

Proposed Rules:

1208 79400

33 CFR

117 79393

42 CFR

414 79562
416 79562
419 79562
482 79562
486 79562
488 79562
495 79562

47 CFR

1 79894
2 79894
15 79894
25 79894
30 79894
101 79894

Proposed Rules:

73 79407

50 CFR

28 79948
29 79948

Proposed Rules:

28 79408
29 79408
635 79409

Rules and Regulations

Federal Register

Vol. 81, No. 219

Monday, November 14, 2016

This section of the FEDERAL REGISTER contains regulatory documents having general applicability and legal effect, most of which are keyed to and codified in the Code of Federal Regulations, which is published under 50 titles pursuant to 44 U.S.C. 1510.

The Code of Federal Regulations is sold by the Superintendent of Documents. Prices of new books are listed in the first FEDERAL REGISTER issue of each week.

DEPARTMENT OF TRANSPORTATION

Federal Aviation Administration

14 CFR Part 39

[Docket No. FAA–2016–5593; Directorate Identifier 2015–NM–184–AD; Amendment 39–18687; AD 2016–21–06]

RIN 2120–AA64

Airworthiness Directives; Bombardier, Inc. Airplanes

AGENCY: Federal Aviation Administration (FAA), Department of Transportation (DOT).

ACTION: Final rule.

SUMMARY: We are superseding Airworthiness Directive (AD) 2015–02–23, for certain Bombardier, Inc. Model CL–600–1A11 (CL–600), CL–600–2A12 (CL–601), and CL–600–2B16 (CL–601–3A and CL–601–3R Variants) airplanes. AD 2015–02–23 required repetitive inspections for fractured or incorrectly oriented fasteners on the inboard flap hinge-box forward fittings on both wings, and replacement of all fasteners if necessary. This new AD also requires replacement of the fasteners, which terminates the requirements of this AD. This AD was prompted by reports of incorrectly oriented fasteners. We are issuing this AD to prevent incorrectly oriented or fractured fasteners, which could result in detachment of the flap hinge-box and the flap surface, and consequent reduced controllability of the airplane.

DATES: This AD is effective December 19, 2016.

The Director of the Federal Register approved the incorporation by reference of certain publications listed in this AD as of February 18, 2015 (80 FR 5670, February 3, 2015).

ADDRESSES: For service information identified in this final rule, contact Bombardier, Inc., 400 Côte-Vertu Road West, Dorval, Québec H4S 1Y9, Canada; Widebody Customer Response Center North America toll-free telephone: 1–866–538–1247 or direct-dial telephone: 1–514–855–2999; fax 514–855–7401; email: *ac.yul@aero.bombardier.com;* Internet: *http://www.bombardier.com.* You may view this referenced service information at the FAA, Transport Airplane Directorate, 1601 Lind Avenue SW., Renton, WA. For information on the availability of this material at the FAA, call 425–227–1221. It is also available on the Internet at *http://www.regulations.gov* by searching for and locating Docket No. FAA–2016–5593.

Examining the AD Docket

You may examine the AD docket on the Internet at *http://www.regulations.gov* by searching for and locating Docket No. FAA–2016–5593; or in person at the Docket Management Facility between 9 a.m. and 5 p.m., Monday through Friday, except Federal holidays. The AD docket contains this AD, the regulatory evaluation, any comments received, and other information. The address for the Docket Office (telephone: 800–647–5527) is Docket Management Facility, U.S. Department of Transportation, Docket Operations, M–30, West Building Ground Floor, Room W12–140, 1200 New Jersey Avenue SE., Washington, DC 20590.

FOR FURTHER INFORMATION CONTACT: Aziz Ahmed, Aerospace Engineer, Airframe and Mechanical Systems Branch, ANE–171, FAA, New York Aircraft Certification Office (ACO), 1600 Stewart Avenue, Suite 410, Westbury, NY 11590; telephone: 516–228–7329; fax: 516–794–5531.

SUPPLEMENTARY INFORMATION:

Discussion

We issued a notice of proposed rulemaking (NPRM) to amend 14 CFR part 39 to supersede AD 2015–02–23, Amendment 39–18092 (80 FR 5670, February 3, 2015) (''AD 2015–02–23''). AD 2015–02–23 applied to certain Bombardier, Inc. Model CL–600–1A11 (CL–600), CL–600–2A12 (CL–601), and CL–600–2B16 (CL–601–3A and CL–601–3R Variants) airplanes. AD 2015–02–23 corresponded to Canadian Emergency AD CF–2013–39R2, dated December 12, 2014 (referred to after this as the Mandatory Continuing Airworthiness Information, or ''the MCAI''). The MCAI was issued by Transport Canada Civil Aviation (TCCA), which is the aviation authority for Canada.

The preamble to AD 2015–02–23 explained that we considered the requirements interim action and were considering further rulemaking. We have now determined that further rulemaking is indeed necessary and that, instead of continuing repetitive inspections, for airplanes which have any incorrectly oriented fastener, and no fractured or missing fastener, replacement of all forward and aft fasteners, regardless of condition or orientation, is necessary. This AD follows from that determination.

The NPRM published in the **Federal Register** on April 20, 2016 (81 FR 23202). The NPRM was prompted by reports of incorrectly oriented fasteners. The NPRM proposed to continue to require repetitive inspections for fractured or incorrectly oriented fasteners on the inboard flap hinge-box forward fittings on both wings, and replacement of all fasteners if necessary. The NPRM also proposed to require replacement of the fasteners, which would terminate the requirements of this AD. We are issuing this AD to prevent incorrectly oriented or fractured fasteners, which could result in detachment of the flap hinge-box and the flap surface, and consequent reduced controllability of the airplane.

Comments

We gave the public the opportunity to participate in developing this AD. We received no comments on the NPRM or on the determination of the cost to the public.

Conclusion

We reviewed the available data and determined that air safety and the public interest require adopting this AD as proposed except for minor editorial changes. We have determined that these minor changes:

- Are consistent with the intent that was proposed in the NPRM for correcting the unsafe condition; and
- Do not add any additional burden upon the public than was already proposed in the NPRM.

Related Service Information Under 1 CFR Part 51

Bombardier has issued Alert Service Bulletins A600–0763, Revision 02, dated December 9, 2014, including Appendixes 1 and 2, dated September 26, 2013; and A601–0627, Revision 02, dated December 9, 2014, including Appendixes 1 and 2, dated September 26, 2013. The service information describes procedures for repetitive inspections of the fasteners on the inboard flap hinge-box forward fittings on both wings, and replacement of fasteners. These documents are distinct since they apply to different airplane models. This service information is reasonably available because the interested parties have access to it through their normal course of business or by the means identified in the **ADDRESSES** section.

Costs of Compliance

We estimate that this AD affects 120 airplanes of U.S. registry.

The actions required by AD 2015–02–23, and retained in this AD, take about 1 work-hour per product, at an average labor rate of $85 per work-hour. Based on these figures, the estimated cost of the actions that are required by AD 2015–02–23 is $85 per product.

We also estimate that it would take about 59 work-hours per product to comply with the basic requirements of this AD. The average labor rate is $85 per work-hour. We have received no definitive data that would enable us to provide cost estimates for the parts cost. Based on these figures, we estimate the cost of this AD on U.S. operators to be $601,800, or $5,015 per product.

In addition, we estimate that any necessary follow-on actions will take about 58 work-hours and require parts costing $753, for a cost of $5,683 per product. We have no way of determining the number of aircraft that might need this action.

According to the manufacturer, some of the costs of this AD may be covered under warranty, thereby reducing the cost impact on affected individuals. We do not control warranty coverage for affected individuals. As a result, we have included all available costs in our cost estimate.

Authority for This Rulemaking

Title 49 of the United States Code specifies the FAA's authority to issue rules on aviation safety. Subtitle I, section 106, describes the authority of the FAA Administrator. ''Subtitle VII: Aviation Programs,'' describes in more detail the scope of the Agency's authority.

We are issuing this rulemaking under the authority described in ''Subtitle VII, Part A, Subpart III, Section 44701: General requirements.'' Under that section, Congress charges the FAA with promoting safe flight of civil aircraft in air commerce by prescribing regulations for practices, methods, and procedures the Administrator finds necessary for safety in air commerce. This regulation is within the scope of that authority because it addresses an unsafe condition that is likely to exist or develop on products identified in this rulemaking action.

Regulatory Findings

We determined that this AD will not have federalism implications under Executive Order 13132. This AD will not have a substantial direct effect on the States, on the relationship between the national government and the States, or on the distribution of power and responsibilities among the various levels of government.

For the reasons discussed above, I certify that this AD:

1. Is not a ''significant regulatory action'' under Executive Order 12866;

2. Is not a ''significant rule'' under the DOT Regulatory Policies and Procedures (44 FR 11034, February 26, 1979);

3. Will not affect intrastate aviation in Alaska; and

4. Will not have a significant economic impact, positive or negative, on a substantial number of small entities under the criteria of the Regulatory Flexibility Act.

List of Subjects in 14 CFR Part 39

Air transportation, Aircraft, Aviation safety, Incorporation by reference, Safety.

Adoption of the Amendment

Accordingly, under the authority delegated to me by the Administrator, the FAA amends 14 CFR part 39 as follows:

PART 39—AIRWORTHINESS DIRECTIVES

■ 1. The authority citation for part 39 continues to read as follows:

Authority: 49 U.S.C. 106(g), 40113, 44701.

§ 39.13 [Amended]

■ 2. The FAA amends § 39.13 by removing Airworthiness Directive (AD) 2015–02–23, Amendment 39–18092 (80 FR 5670, February 3, 2015), and adding the following new AD:

2016–21–06 Bombardier, Inc.: Amendment 39–18687; Docket No. FAA–2016–5593; Directorate Identifier 2015–NM–184–AD.

(a) Effective Date

This AD is effective December 19, 2016.

(b) Affected ADs

This AD replaces AD 2015–02–23, Amendment 39–18092 (80 FR 5670, February 3, 2015) (''AD 2015–02–23''). This AD affects AD 2014–03–17, Amendment 39–17754 (79 FR 9389, February 19, 2014) (''AD 2014–03–17'').

(c) Applicability

This AD applies to the Bombardier, Inc. airplanes identified in paragraphs (c)(1), (c)(2), and (c)(3) of this AD, certificated in any category.

(1) Bombardier, Inc. Model CL–600–1A11 (CL–600) airplanes, having serial numbers (S/Ns) 1004 through 1085 inclusive.

(2) Bombardier, Inc. Model CL–600–2A12 (CL–601) airplanes, having S/Ns 3001 through 3066 inclusive.

(3) Bombardier, Inc. Model CL–600–2B16 (CL–601–3A and CL–601–3R Variants) airplanes, having S/Ns 5001 through 5194 inclusive.

(d) Subject

Air Transport Association (ATA) of America Code 57, Wings.

(e) Reason

This AD was prompted by reports of incorrectly oriented fasteners. We are issuing this AD to prevent incorrectly oriented or fractured fasteners, which could result in detachment of the flap hinge-box and the flap surface, and consequent reduced controllability of the airplane.

(f) Compliance

Comply with this AD within the compliance times specified, unless already done.

(g) Retained Inspection on Airplanes Not Previously Inspected, With No Changes

This paragraph restates the requirements of paragraph (g) of AD 2015–02–23, with no changes. For airplanes that have not been inspected as required by paragraph (g) of AD 2014–03–17, as of February 18, 2015 (the effective date of AD 2015–02–23): Within 10 flight cycles after February 18, 2015, or 100 flight cycles after March 6, 2014 (the effective date of AD 2014–03–17), whichever occurs first, do a detailed visual inspection for incorrect orientation and any fractured or missing fastener heads of each inboard flap fastener of the hinge-box forward fitting at wing station (WS) 76.50 and WS 127.25, on both wings, in accordance with the Accomplishment Instructions of the applicable service information specified in paragraphs (g)(1) and (g)(2) of this AD. Accomplishing the inspection required by this paragraph terminates the requirements of paragraph (g) of AD 2014–03–17 for the inspected airplane only.

(1) For Model CL–600–1A11 (CL–600) airplanes having S/Ns 1004 through 1085 inclusive: Bombardier Alert Service Bulletin A600–0763, Revision 02, dated December 9, 2014, including Appendixes 1 and 2, dated September 26, 2013.

(2) For Model CL–600–2A12 (CL–601) airplanes having S/Ns 3001 through 3066

inclusive, and Model CL–600–2B16 (CL–601–3A and CL–601–3R Variants) airplanes having S/Ns 5001 through 5194 inclusive: Bombardier Alert Service Bulletin A601–0627, Revision 02, dated December 9, 2014, including Appendixes 1 and 2, dated September 26, 2013.

(h) Retained Corrective Actions for Paragraph (g) of This AD, With Revised Paragraph (h)(2) of This AD

(1) This paragraph restates the requirements of paragraph (h)(1) of AD 2015–02–23, with no changes. If, during any inspection required by paragraph (g) of this AD, all fasteners are found correctly oriented and not fractured, and no fastener heads are missing (fasteners found intact): No further action is required by this AD.

(2) This paragraph restates the requirements of paragraph (h)(2) of AD 2015–02–23, with revised references to replacement paragraphs. If, during any inspection required by paragraph (g) of this AD, any fastener is found incorrectly oriented but no fasteners are fractured or are missing a fastener head (fasteners found intact), repeat the inspection required by paragraph (g) of this AD thereafter at intervals not to exceed 10 flight cycles until the replacements specified in paragraphs (h)(3), (k), or (n) of this AD are accomplished.

(3) This paragraph restates the requirements of paragraph (h)(3) of AD 2015–02–23, with no changes. If, during any inspection required by paragraph (g) of this AD, any fastener is found fractured or has a missing fastener head: Before further flight, remove and replace all forward and aft fasteners (regardless of orientation or condition) at WS 76.50 and WS 127.25, on both wings, in accordance with the Accomplishment Instructions of the applicable service information specified in paragraphs (h)(3)(i) and (h)(3)(ii) of this AD, except as required by paragraph (m) of this AD. After accomplishing the replacements required by this paragraph, no further action is required by this AD.

(i) For Model CL–600–1A11 (CL–600) airplanes having S/Ns 1004 through 1085 inclusive: Bombardier Alert Service Bulletin A600–0763, Revision 02, dated December 9, 2014, including Appendixes 1 and 2, dated September 26, 2013.

(ii) For Model CL–600–2A12 (CL–601) airplanes having S/Ns 3001 through 3066 inclusive, and Model CL–600–2B16 (CL–601–3A and CL–601–3R Variants) airplanes having S/Ns 5001 through 5194 inclusive: Bombardier Alert Service Bulletin A601–0627, Revision 02, dated December 9, 2014, including Appendixes 1 and 2, dated September 26, 2013.

(i) Retained Inspection for Airplanes Previously Inspected and Found To Have Incorrectly Oriented Fastener(s), With No Changes

This paragraph restates the requirements of paragraph (i) of AD 2015–02–23, with no changes. For airplanes on which an inspection required by paragraph (g) or (j) of AD 2014–03–17, has been done as of the effective date of this AD, and on which any incorrectly oriented fastener was found but no fasteners were fractured (fasteners found intact): Except as provided by paragraph (l) of this AD, within 10 flight cycles after February 18, 2015 (the effective date of AD 2015–02–23), or within 100 flight cycles after accomplishing the most recent inspection required by AD 2014–03–17, whichever occurs first, do a detailed visual inspection for any fractured or missing fastener heads of each inboard flap fastener of the hinge-box forward fitting at WS 76.50 and WS 127.25, on both wings. Do the inspection in accordance with the Accomplishment Instructions of the applicable service information specified in paragraphs (i)(1) and (i)(2) of this AD. Accomplishing the inspection required by this paragraph terminates the requirements of paragraphs (g) and (j) of AD 2014–03–17 for the inspected airplane only.

(1) For Model CL–600–1A11 (CL–600) airplanes having S/Ns 1004 through 1085 inclusive: Bombardier Alert Service Bulletin A600–0763, Revision 02, dated December 9, 2014, including Appendixes 1 and 2, dated September 26, 2013.

(2) For Model CL–600–2A12 (CL–601) airplanes having S/Ns 3001 through 3066 inclusive, and Model CL–600–2B16 (CL–601–3A and CL–601–3R Variants) airplanes having S/Ns 5001 through 5194 inclusive: Bombardier Alert Service Bulletin A601–0627, Revision 02, dated December 9, 2014, including Appendixes 1 and 2, dated September 26, 2013.

(j) Retained Corrective Actions for Paragraph (i) of This AD, With Revised Reference to Additional, New Requirements

(1) This paragraph restates the requirements of paragraph (j)(1) of AD 2015–02–23, with revised reference to additional, new requirements. If, during any inspection required by paragraph (i) of this AD, no fasteners are found fractured or have missing fastener heads (fasteners are intact), repeat the inspection required by paragraph (i) of this AD thereafter at intervals not to exceed 10 flight cycles until the replacement specified in paragraph (j)(2), (k), or (n) of this AD is accomplished.

(2) This paragraph restates the requirements of paragraph (j)(2) of AD 2015–02–23, with no changes. If, during any inspection required by paragraph (i) of this AD, any fastener is found fractured or has a missing fastener head: Before further flight, remove and replace all forward and aft fasteners (regardless of orientation or condition) at WS 76.50 and WS 127.25, on both wings, in accordance with the Accomplishment Instructions of the applicable service information specified in paragraphs (j)(2)(i) and (j)(2)(ii) of this AD, except as required by paragraph (m) of this AD. After accomplishing the replacements required by this paragraph, no further action is required by this AD.

(i) For Model CL–600–1A11 (CL–600) airplanes having S/Ns 1004 through 1085 inclusive: Bombardier Alert Service Bulletin A600–0763, Revision 02, dated December 9, 2014, including Appendixes 1 and 2, dated September 26, 2013.

(ii) For Model CL–600–2A12 (CL–601) airplanes having S/Ns 3001 through 3066 inclusive, and Model CL–600–2B16 (CL–601–3A and CL–601–3R Variants) airplanes having S/Ns 5001 through 5194 inclusive: Bombardier Alert Service Bulletin A601–0627, Revision 02, dated December 9, 2014, including Appendixes 1 and 2, dated September 26, 2013.

(k) Retained Optional Terminating Action for Incorrectly Oriented Fasteners, With No Changes

This paragraph restates the provisions of paragraph (k) of AD 2015–02–23, with no changes. Replacement of all forward and aft fasteners (regardless of orientation or condition) at WS 76.50 and WS 127.25, on both wings, terminates the requirements of this AD. The replacement must be done in accordance with the Accomplishment Instructions of the applicable service information specified in paragraphs (k)(1) and (k)(2) of this AD, except as provided by paragraph (m) of this AD. Doing the replacements specified in this paragraph terminates the requirements of paragraphs (g) and (j) of AD 2014–03–17, only for the airplane on which the replacement was done.

(1) For Model CL–600–1A11 (CL–600) airplanes having S/Ns 1004 through 1085 inclusive: Bombardier Alert Service Bulletin A600–0763, Revision 02, dated December 9, 2014, including Appendixes 1 and 2, dated September 26, 2013.

(2) For Model CL–600–2A12 (CL–601) airplanes having S/Ns 3001 through 3066 inclusive, and Model CL–600–2B16 (CL–601–3A and CL–601–3R Variants) airplanes having S/Ns 5001 through 5194 inclusive: Bombardier Alert Service Bulletin A601–0627, Revision 02, dated December 9, 2014, including Appendixes 1 and 2, dated September 26, 2013.

(l) Retained Exception for Previously Replaced Fasteners, With No Changes

This paragraph restates the provisions of paragraph (l) of AD 2015–02–23, with no changes. Replacement of all fractured and incorrectly oriented forward and aft fasteners, as specified in paragraph (i) or (k) of AD 2014–03–17, if done before the effective date of this AD, is considered acceptable for compliance with the requirements of this AD.

(m) Retained Exception to the Service Information, With No Changes

This paragraph restates the requirements of paragraph (m) of AD 2015–02–23, with no changes. Where Bombardier Alert Service Bulletin A600–0763, Revision 02, dated December 9, 2014, including Appendixes 1 and 2, dated September 26, 2013; and Bombardier Alert Service Bulletin A601–0627, Revision 02, dated December 9, 2014, including Appendixes 1 and 2, dated September 26, 2013; specify to contact Bombardier for repair instructions, before further flight, repair using a method approved by the Manager, New York Aircraft Certification Office (ACO), FAA; or Transport Canada Civil Aviation (TCCA); or Bombardier's TCCA Design Approval Organization (DAO).

(n) New Requirement of This AD: Terminating Action

For airplanes on which any incorrectly oriented fastener, and no fractured or missing fastener, was detected during any inspection required by paragraph (g), (h)(2), (i), and (j)(1) of this AD: Within 24 months after the effective date of this AD, replace all forward and aft fasteners, regardless of condition or orientation, at WS 76.50 and WS 127.25, on affected wings, in accordance with the Accomplishment Instructions of the applicable service information specified in paragraphs (k)(1) and (k)(2) of this AD, except as provided by paragraph (m) of this AD. Doing the replacements specified in this paragraph terminates the requirements of this AD. Doing the replacements specified in this paragraph terminates the requirements of paragraphs (g) and (j) of AD 2014–03–17, only for the airplane on which the replacement was done.

(o) Credit for Previous Actions

This paragraph restates the provisions of paragraph (n) of AD 2015–02–23, with new credit for paragraph (n) of this AD. This paragraph provides credit for actions required by paragraphs (g), (h), (i), and (n) of this AD, if those actions were performed before the effective date of this AD using the applicable service information identified in paragraphs (o)(1) through (o)(4) of this AD.

(1) Bombardier Alert Service Bulletin A600–0763, including Appendixes 1 and 2, dated September 26, 2013, which was previously incorporated by reference on March 6, 2014 (79 FR 9389, February 19, 2014).

(2) Bombardier Alert Service Bulletin A600–0763, Revision 01, dated February 26, 2014, including Appendixes 1 and 2, dated September 26, 2013, which is not incorporated by reference in this AD.

(3) Bombardier Alert Service Bulletin A601–0627, including Appendixes 1 and 2, dated September 26, 2013, which was previously incorporated by reference on March 6, 2014 (79 FR 9389, February 19, 2014).

(4) Bombardier Alert Service Bulletin A601–0627, Revision 01, dated February 26, 2014, including Appendixes 1 and 2, dated September 26, 2013, which is not incorporated by reference in this AD.

(p) Other FAA AD Provisions

The following provisions also apply to this AD:

(1) *Alternative Methods of Compliance (AMOCs):* The Manager, New York ACO, ANE–170, FAA, has the authority to approve AMOCs for this AD, if requested using the procedures found in 14 CFR 39.19. In accordance with 14 CFR 39.19, send your request to your principal inspector or local Flight Standards District Office, as appropriate. If sending information directly to the ACO, send it to ATTN: Program Manager, Continuing Operational Safety, FAA, New York ACO, 1600 Stewart Avenue, Suite 410, Westbury, NY 11590; telephone: 516–228–7300; fax: 516–794–5531. Before using any approved AMOC, notify your appropriate principal inspector, or lacking a principal inspector, the manager of the local flight standards district office/certificate holding district office.

(2) *Contacting the Manufacturer:* For any requirement in this AD to obtain corrective actions from a manufacturer, the action must be accomplished using a method approved by the Manager, New York ACO, ANE–170, FAA; or TCCA; or Bombardier, Inc.'s TCCA DAO. If approved by the DAO, the approval must include the DAO-authorized signature.

(q) Related Information

(1) Refer to Mandatory Continuing Airworthiness Information (MCAI) Canadian Emergency AD CF–2013–39R2, dated December 12, 2014, for related information. This MCAI may be found in the AD docket on the Internet at *http://www.regulations.gov* by searching for and locating Docket No. FAA–2016–5593.

(2) Service information identified in this AD that is not incorporated by reference is available at the addresses specified in paragraphs (r)(4) and (r)(5) of this AD.

(r) Material Incorporated by Reference

(1) The Director of the Federal Register approved the incorporation by reference (IBR) of the service information listed in this paragraph under 5 U.S.C. 552(a) and 1 CFR part 51.

(2) You must use this service information as applicable to do the actions required by this AD, unless this AD specifies otherwise.

(3) The following service information was approved for IBR on February 18, 2015 (80 FR 5670, February 3, 2015).

(i) Bombardier Alert Service Bulletin A600–0763, Revision 02, dated December 9, 2014, including Appendixes 1 and 2, dated September 26, 2013.

(ii) Bombardier Alert Service Bulletin A601–0627, Revision 02, dated December 9, 2014, including Appendixes 1 and 2, dated September 26, 2013.

(4) For service information identified in this AD, contact Bombardier, Inc., 400 Côte-Vertu Road West, Dorval, Québec H4S 1Y9, Canada; Widebody Customer Response Center North America toll-free telephone: 1–866–538–1247 or direct-dial telephone: 1–514–855–2999; fax 514–855–7401; email: *ac.yul@aero.bombardier.com;* Internet: *http://www.bombardier.com.*

(5) You may view this service information at the FAA, Transport Airplane Directorate, 1601 Lind Avenue SW., Renton, WA. For information on the availability of this material at the FAA, call 425–227–1221.

(6) You may view this service information that is incorporated by reference at the National Archives and Records Administration (NARA). For information on the availability of this material at NARA, call 202–741–6030, or go to: *http://www.archives.gov/federal-register/cfr/ibr-locations.html.*

Issued in Renton, Washington, on October 7, 2016.

Michael Kaszycki,

Acting Manager, Transport Airplane Directorate, Aircraft Certification Service.

[FR Doc. 2016–25009 Filed 11–10–16; 8:45 am]

BILLING CODE 4910–13–P

DEPARTMENT OF TRANSPORTATION

Federal Aviation Administration

14 CFR Part 39

[Docket No. FAA–2015–7527; Directorate Identifier 2015–NM–094–AD; Amendment 39–18686; AD 2016–21–05]

RIN 2120–AA64

Airworthiness Directives; The Boeing Company Airplanes

AGENCY: Federal Aviation Administration (FAA), DOT.

ACTION: Final rule.

SUMMARY: We are adopting a new airworthiness directive (AD) for certain The Boeing Company Model 777–200, –200LR, –300, and –300ER series airplanes. This AD was prompted by a report indicating that the manufacturer discovered locations where the control components and wiring of the left and right engine fuel spar valves do not have adequate physical separation to meet the redundant system separation requirements. This AD requires modifying the wiring, and installing a new relay bracket and new location for the relay on the left and right engine fuel spar valves. This AD also requires an inspection to identify the part number of the motor operated valve (MOV) actuators for the left and right engine fuel spar valves; replacement of specified MOV actuators with new MOV actuators; certain bonding resistance measurements; and applicable corrective actions. We are issuing this AD to prevent loss of control of both the left and right engine fuel spar valves during a single event, such as local wire bundle damage or a wire bundle fire, which could cause both engines to shut down or result in the inability to control an engine fire.

DATES: This AD is effective December 19, 2016.

The Director of the Federal Register approved the incorporation by reference of certain publications listed in this AD as of December 19, 2016.

ADDRESSES: For service information identified in this final rule, contact Boeing Commercial Airplanes, Attention: Data & Services Management, P.O. Box 3707, MC 2H–65, Seattle, WA 98124–2207; telephone 206–544–5000, extension 1; fax 206–766–5680; Internet *https://www.myboeingfleet.com.* You may view this referenced service information at the FAA, Transport Airplane Directorate, 1601 Lind Avenue SW., Renton, WA. For information on the availability of this material at the FAA, call 425–227–1221. It is also

available on the Internet at *http://www.regulations.gov* by searching for and locating Docket No. FAA–2015–7527.

Examining the AD Docket

You may examine the AD docket on the Internet at *http://www.regulations.gov* by searching for and locating Docket No. FAA–2015–7527; or in person at the Docket Management Facility between 9 a.m. and 5 p.m., Monday through Friday, except Federal holidays. The AD docket contains this AD, the regulatory evaluation, any comments received, and other information. The address for the Docket Office (phone: 800–647–5527) is Docket Management Facility, U.S. Department of Transportation, Docket Operations, M–30, West Building Ground Floor, Room W12–140, 1200 New Jersey Avenue SE., Washington, DC 20590.

FOR FURTHER INFORMATION CONTACT: Brendan Shanley, Aerospace Engineer, Systems and Equipment Branch, ANM–130S, FAA, Seattle Aircraft Certification Office, 1601 Lind Avenue SW., Renton, WA 98057–3356; telephone: 425–917–6492; fax: 425–917–6590; email: *brendan.shanley@faa.gov.*

SUPPLEMENTARY INFORMATION:

Discussion

We issued a notice of proposed rulemaking (NPRM) to amend 14 CFR part 39 by adding an AD that would apply to certain The Boeing Company Model 777–200, –200LR, –300, and –300ER series airplanes. The NPRM published in the **Federal Register** on December 23, 2015 (80 FR 79754) (''the NPRM''). The NPRM was prompted by a report indicating that the manufacturer discovered locations where the control components and wiring of the left and right engine fuel spar valves do not have adequate physical separation to meet the redundant system separation requirements. The NPRM proposed to require modifying the wiring, and installing a new relay bracket and new location for the relay on the left and right engine fuel spar valves. The NPRM also proposed to require an inspection to identify the part number of the MOV actuators for the left and right engine fuel spar valves; replacement of specified MOV actuators with new MOV actuators; certain bonding resistance measurements; and applicable corrective actions. We are issuing this AD to prevent loss of control of both the left and right engine fuel spar valves during a single event, such as local wire bundle damage or a wire bundle fire, which could cause both engines to shut down or result in the inability to control an engine fire.

Comments

We gave the public the opportunity to participate in developing this AD. The following presents the comments received on the NPRM and the FAA's response to each comment. Boeing stated that it has reviewed the NPRM and concurs with the contents of the NPRM.

Request To Reduce the Compliance Time

One commenter, Geoffrey Barrance, requested that we reduce the compliance time in paragraph (g) of the proposed AD. Mr. Barrance stated he is concerned that the timescale proposed for implementing the required modification, 60 months after the effective date of the AD, is too long. Mr. Barrance commented that the unsafe condition is a common failure affecting the continued operation of both engines, and therefore is critical to the safe flight and landing of any airplane.

We disagree with the commenter's request. It is important to note that while the commenter has indicated there is currently a common mode failure affecting the continued operation of both engines, it is more accurate to say that certain airplanes are currently in a configuration that makes them vulnerable to a single event causing a common mode failure. However, there have been no reports of any events causing this condition. This AD is intended to eliminate that condition.

The compliance time is determined to be appropriate in consideration of the risk and the safety implications, the average utilization rate of the affected fleet, the practical aspects of an orderly modification of the fleet during regular maintenance periods, and the availability of required modification parts. In addition to our own criteria, we have also considered the manufacturer's safety assessment and recommendation for the compliance time. The compliance time accounts for the risk to the fleet, availability of parts, and other factors. Therefore, we have determined that the compliance time is acceptable. We have not changed this AD in this regard.

Request To Remove the Concurrent Requirements

All Nippon Airways (ANA), Japan Airlines (JAL), and United Airlines (UAL) requested that we remove the concurrent requirement for accomplishing Boeing Service Bulletin 777–28A0034, Revision 3, dated September 25, 2015. JAL and ANA stated that there was no relationship between the wiring change and the actuator replacement. ANA, JAL, and UAL commented that Boeing Service Bulletin 777–28A0034, Revision 3, dated September 25, 2015, is already mandated by AD 2013–05–03, Amendment 39–17375 (78 FR 17290, March 21, 2013) (''AD 2013–05–03''), and it addressed MOV actuator part number (P/N) MA20A1001–1; therefore, it should not be a concurrent requirement. ANA also added that because the MOV actuator has been addressed, paragraphs (i)(2) and (i)(3) of the proposed AD should not be included.

We partially agree with the commenters. We agree that the actions in Boeing Service Bulletin 777–28A0034, Revision 3, dated September 25, 2015, are the same actions that are required by AD 2013–05–03 in accordance with Boeing Service Bulletin 777–28A0034, Revision 2, dated September 20, 2010, with a compliance date of April 25, 2018. Because of the overlap in compliance times, the action required by AD 2013–05–03 may not be fully completed by the time the requirements of this AD become effective. To ensure that the actuator change, in accordance with Boeing Service Bulletin 777–28A0034, Revision 3, dated September 25, 2015, is done prior to the wiring change in accordance with Boeing Special Attention Service Bulletin 777–28–0061, Revision 2, dated May 4, 2015, we have required Boeing Service Bulletin 777–28A0034, Revision 3, dated September 25, 2015, as a concurrent requirement in this AD. Without this concurrent requirement, it is possible that this AD could approve certain configurations that are not compliant and safe. The concurrent requirement eliminates this possibility. The requirements of Boeing Service Bulletin 777–28A0034, Revision 3, dated September 25, 2015, and related credit for previous actions, will remain as stated. We have not changed this AD in this regard.

Request To Use Boeing Information Notice for Completing the Requirements in the AD

ANA requested that we include Boeing Service Bulletin Information Notice 777–28–0061, IN 03, dated November 16, 2015, to this AD to allow the operators to complete the proposed requirements of the NPRM.

We partially agree with the commenter's request. We cannot include Boeing Service Bulletin Information Notice 777–28–0061, IN 03, dated November 16, 2015, as an

appropriate source of service information in this AD because it is not an FAA-approved document. However, we acknowledge that for certain airplanes, Figure 22, Sheet 9, of Boeing Special Attention Service Bulletin 777–28–0061, Revision 2, dated May 4, 2015, includes an editorial error, which shows incorrect wire routing. Boeing Service Bulletin Information Notice 777–28–0061, IN 03, dated November 16, 2015, allows for a modification of Group 2 airplanes that meets the requirements of the AD without an additional burden to operators. We have included a corrected figure in paragraph (h) of this AD to address this issue.

In addition, Figure 11, Sheet 1, of Boeing Special Attention Service Bulletin 777–28–0061, Revision 2, dated May 4, 2015, is incorrect in that it shows the cap and stow of an existing wire, W4255–1002–20, which is terminated at splice SP41201. The correct wire number to be capped and stowed is W6251–1002–20, which is terminated at splice SP41201. We have clarified this information in paragraph (h)(2) of this AD.

Request To Clarify the Terminating Action

JAL and UAL requested that we clarify the terminating action specified in the proposed rule. JAL asked that Boeing Service Bulletin 777–28A0034 be used as a terminating action for the requirements of the proposed rule. UAL stated that since AD 2013–05–03 already addressed MOV actuator P/N MA20A2027 and P/N MA30A1001, it contradicts airworthiness limitations (AWL) 28–AWL–MOV, which was mandated in AD 2015–19–01, Amendment 39–18264 (80 FR 55521, dated September 16, 2015) (''AD 2015–19–01'').

We agree that clarification is necessary. We agree that certain configurations in Boeing Service Bulletin 777–28A0034, Revision 3, dated September 25, 2015, in conjunction with previous airplane configurations, alleviate the need to do the AWL task implemented by AD 2013–05–03 because the configurations are outside the applicability of that AWL. However, we disagree with using Boeing Service Bulletin 777–28A0034, Revision 3, dated September 25, 2015, as a terminating action because the requirement of AD 2015–19–01 is to implement the airworthiness limitations items (ALI) into an operator's maintenance program, and this must be done regardless of the configuration of the airplane. Further, certain MOV actuator part numbers can be installed that will place an airplane in the applicability of AWL 28–AWL–MOV, thus requiring periodic inspections to ensure safe operation. Each operator has the option to select a configuration best for its circumstances and can evaluate its configurations and determine if AWL 28–AWL–MOV is applicable to their fleet configuration. We have not changed this AD in this regard.

Request To Review the Design and Certification Process

Geoffrey Barrance requested that we review the design and certification process that allowed for the unsafe condition to exist, as well as a review of designs in other airplanes with similar unsafe conditions. Mr. Barrance commented that the unsafe condition indicated a failure has occurred in the design and certification process for the airplane type. Mr. Barrance also commented that a review of the airplane design is required to prevent the implementation of common mode fault exposures for redundant systems.

We acknowledge the commenter's concerns. We continuously evaluate our certification system and procedures and improve them when problems are found. If the FAA is made aware of potential design deficiencies occurring on a certificated product, we conduct an investigation, evaluate the manufacturer's root-cause analysis, and make a determination whether or not an unsafe condition exists. We then take appropriate action to mitigate the unsafe condition and to identify and incorporate certification system process improvements for future designs. Furthermore, the manufacturer performs a cross model evaluation to determine if the condition exists on other models. We agree with the manufacturer's actions in this regard. We have not changed this AD regarding this issue.

Conclusion

We reviewed the relevant data, considered the comments received, and determined that air safety and the public interest require adopting this AD with the changes described previously and minor editorial changes. We have determined that these minor changes:

- Are consistent with the intent that was proposed in the NPRM for correcting the unsafe condition; and
- Do not add any additional burden upon the public than was already proposed in the NPRM.

We also determined that these changes will not increase the economic burden on any operator or increase the scope of this AD.

Related Service Information Under 1 CFR Part 51

We reviewed Boeing Special Attention Service Bulletin 777–28–0061, Revision 2, dated May 4, 2015. The service information describes procedures for modifying the wiring, and installing a new relay bracket and new location for the relay on the left and right engine fuel spar valves.

We have also reviewed Boeing Service Bulletin 777–28A0034, Revision 3, dated September 25, 2015. The service information describes procedures for an inspection of the MOV actuators of the left and right engine fuel spar valves for (P/N) MA20A1001–1, replacement of MOV actuators, measurement of the electrical resistance of the bond from the adapter plate to the airplane structure, and applicable corrective actions.

This service information is reasonably available because the interested parties have access to it through their normal course of business or by the means identified in the **ADDRESSES** section.

Costs of Compliance

We estimate that this AD affects 133 airplanes of U.S. registry.

We estimate the following costs to comply with this AD:

ESTIMATED COSTS

Action	Labor cost	Parts cost	Cost per product	Cost on U.S. operators
Installation and modification.	119 work-hours × $85 per hour = $10,115.	Up to $3,780 depending on airplane configuration.	Up to $13,895 depending on airplane configuration.	Up to $1,848,035 depending on airplane configuration.
Inspection of MOV actuators [concurrent requirements].	1 work-hour × $85 per hour = $85.	$0	$85	$11,305.

We estimate the following costs to do any necessary replacements and bonding resistance measurements that would be required based on the results of the inspection. We have no way of determining the number of aircraft that might need these replacements:

ON-CONDITION COSTS

Action	Labor cost	Parts cost	Cost per product
Replacement of MOV actuators for the left and right engine fuel spar valves.	Up to 105 work-hours × $85 per hour = $8,925.	Up to $10,954	Up to $19,879.
Bonding resistance measurements	1 work-hour × $85 per hour = $85	$0	$85.

We have received no definitive data on the costs of the corrective actions for the bonding resistance measurement in this AD.

Authority for This Rulemaking

Title 49 of the United States Code specifies the FAA's authority to issue rules on aviation safety. Subtitle I, section 106, describes the authority of the FAA Administrator. Subtitle VII: Aviation Programs, describes in more detail the scope of the Agency's authority.

We are issuing this rulemaking under the authority described in Subtitle VII, Part A, Subpart III, Section 44701: ''General requirements.'' Under that section, Congress charges the FAA with promoting safe flight of civil aircraft in air commerce by prescribing regulations for practices, methods, and procedures the Administrator finds necessary for safety in air commerce. This regulation is within the scope of that authority because it addresses an unsafe condition that is likely to exist or develop on products identified in this rulemaking action.

Regulatory Findings

This AD will not have federalism implications under Executive Order 13132. This AD will not have a substantial direct effect on the States, on the relationship between the national government and the States, or on the distribution of power and responsibilities among the various levels of government.

For the reasons discussed above, I certify that this AD:

(1) Is not a ''significant regulatory action'' under Executive Order 12866,

(2) Is not a ''significant rule'' under DOT Regulatory Policies and Procedures (44 FR 11034, February 26, 1979),

(3) Will not affect intrastate aviation in Alaska, and

(4) Will not have a significant economic impact, positive or negative, on a substantial number of small entities under the criteria of the Regulatory Flexibility Act.

List of Subjects in 14 CFR Part 39

Air transportation, Aircraft, Aviation safety, Incorporation by reference, Safety.

Adoption of the Amendment

Accordingly, under the authority delegated to me by the Administrator, the FAA amends 14 CFR part 39 as follows:

PART 39—AIRWORTHINESS DIRECTIVES

■ 1. The authority citation for part 39 continues to read as follows:

Authority: 49 U.S.C. 106(g), 40113, 44701.

§ 39.13 [Amended]

■ 2. The FAA amends § 39.13 by adding the following new airworthiness directive (AD):

2016–21–05 The Boeing Company: Amendment 39–18686; Docket No. FAA–2015–7527; Directorate Identifier 2015–NM–094–AD.

(a) Effective Date

This AD is effective December 19, 2016.

(b) Affected ADs

None.

(c) Applicability

This AD applies to The Boeing Company Model 777–200, –200LR, –300, and –300ER series airplanes, certificated in any category, as identified in Boeing Special Attention Service Bulletin 777–28–0061, Revision 2, dated May 4, 2015.

(d) Subject

Air Transport Association (ATA) of America Code 2822, Fuel Boost Pump.

(e) Unsafe Condition

This AD was prompted by a report indicating that the manufacturer discovered locations where the control components and wiring of the left and right engine fuel spar valves do not have adequate physical separation to meet the redundant system separation requirements. We are issuing this AD to prevent loss of control of both the left and right engine fuel spar valves during a single event, such as local wire bundle damage or a wire bundle fire, which could cause both engines to shut down or result in the inability to control an engine fire.

(f) Compliance

Comply with this AD within the compliance times specified, unless already done.

(g) Modification

Within 60 months after the effective date of this AD, modify the wiring and install new relay brackets in new locations to allow installation of new relays for the left and right engine fuel spar valves, in accordance with the Accomplishment Instructions of Boeing Special Attention Service Bulletin 777–28–0061, Revision 2, dated May 4, 2015, except as required by paragraph (h) of this AD.

(h) Exceptions to the Service Information

(1) Where Boeing Special Attention Service Bulletin 777–28–0061, Revision 2, dated May 4, 2015, specifies to use Figure 22, Sheet 9, for the wiring installation of the right engine fuel spar valve, this AD requires using figure 1 to paragraph (h) of this AD.

(2) Boeing Special Attention Service Bulletin 777–28–0061, Revision 2, dated May 4, 2015, specifies to use Figure 11, Sheet 1, for the wiring change at E2–6—Shelf to Disconnect Panel and Splice Area. The figure shows the capping and stowing of an existing wire, W4255–1002–20, which is terminated at splice SP41201. The wire number is incorrect. The correct wire number to cap and stow is W6251–1002–20, which is terminated at splice SP41201.

BILLING CODE 4910–13–P

Figure 1 to paragraph (h) of this AD: *Wiring Installation - Right Engine Fuel Spar Valve*

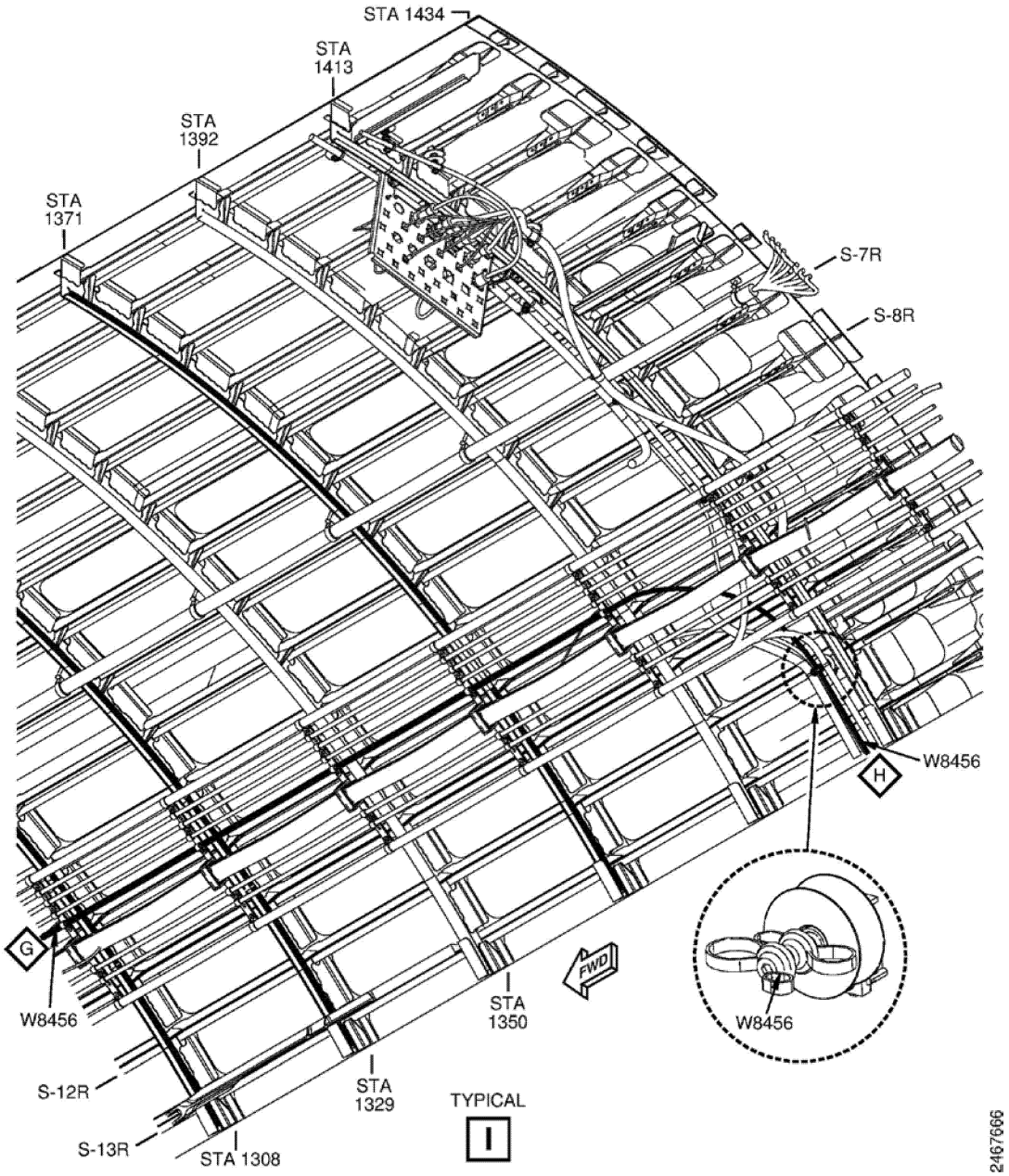

BILLING CODE 4910–13–C

(i) Concurrent Requirements

(1) Prior to or concurrently with accomplishing the requirements of paragraph (g) of this AD: Do an inspection of the motor operated valve (MOV) actuators of the left and right engine fuel spar valves for part number (P/N) MA20A1001–1, in accordance with the Accomplishment Instructions of Boeing Service Bulletin 777–28A0034, Revision 3, dated September 25, 2015. A review of airplane maintenance records is acceptable in lieu of this inspection if the part number can be conclusively determined from that review.

(2) If any MOV actuator having P/N MA20A1001–1 is found during the inspection required by paragraph (i)(1) of this AD, prior to or concurrently with accomplishing the requirements of paragraph (g) of this AD, replace the MOV actuator with either a new or serviceable MOV actuator having P/N MA30A1001, MA30A1017, MA20A2027, or an MOV actuator that meets the criteria specified in paragraphs (i)(2)(i) and (i)(2)(ii) of this AD; and, as applicable, measure the electrical resistance of the bond from the adapter plate to the airplane structure and, before further flight, do all applicable corrective actions. All actions specified in this paragraph for the left and right engine fuel spar valves must be done in accordance with the Accomplishment Instructions of Boeing Service Bulletin 777–28A0034, Revision 3, dated September 25, 2015.

(i) The replacement MOV actuator must be a Boeing part that is approved after the issuance of Boeing Service Bulletin 777–28A0034, Revision 3, dated September 25, 2015, by the Manager, Seattle Aircraft

Certification Office (ACO), FAA; or the Boeing Commercial Airplanes Organization Designation Authorization (ODA) that has been authorized by the Manager, Seattle ACO, to approve the part.

(ii) The replacement MOV actuator must be fully interchangeable with the part specified in Boeing Service Bulletin 777–28A0034, Revision 3, dated September 25, 2015.

(j) Credit for Previous Actions

(1) This paragraph provides credit for the requirements of paragraph (g) of this AD, if those actions were performed before the effective date of this AD using Boeing Special Attention Service Bulletin 777–28–0061, dated October 25, 2010; or Boeing Special Attention Service Bulletin 777–28–0061, Revision 1, dated January 26, 2012; as applicable. These documents are not incorporated by reference in this AD.

(2) This paragraph provides credit for the requirements of paragraph (i) of this AD, if those actions were performed before April 25, 2013 (the effective date of AD 2013–05–03, Amendment 39–17375 (78 FR 17290, March 21, 2013), ''AD 2013–05–03''), using Boeing Alert Service Bulletin 777–28A0034, dated August 2, 2007; or Boeing Alert Service Bulletin 777–28A0034, Revision 1, dated May 20, 2010; except that the replacement of MOV actuators of the left and right engine fuel spar valves must also include cap sealing the bonding jumper, as described in Boeing Service Bulletin 777–28A0034, Revision 2, dated September 20, 2010; and provided that the replacement is an MOV actuator identified in paragraph (j)(2)(i) or (j)(2)(ii) of this AD. Boeing Alert Service Bulletin 777–28A0034, dated August 2, 2007, and Boeing Alert Service Bulletin 777–28A0034, Revision 1, dated May 20, 2010, are not incorporated by reference in this AD. Boeing Service Bulletin 777–28A0034, Revision 2, dated September 20, 2010, is incorporated by reference in AD 2013–05–03.

(i) An MOV actuator that has P/N MA30A1001, MA30A1017, or MA20A2027.

(ii) An MOV actuator that has a part number other than P/N MA20A1001–1 and meets the criteria specified in paragraphs (i)(2)(i) and (i)(2)(ii) of this AD.

(3) This paragraph provides credit for the requirements of paragraph (i) of this AD, if those actions were performed before the effective date of this AD using Boeing Service Bulletin 777–28A0034, Revision 2, dated September 20, 2010, which was incorporated by reference in AD 2013–05–03.

(k) Alternative Methods of Compliance (AMOCs)

(1) The Manager, Seattle ACO, FAA, has the authority to approve AMOCs for this AD, if requested using the procedures found in 14 CFR 39.19. In accordance with 14 CFR 39.19, send your request to your principal inspector or local Flight Standards District Office, as appropriate. If sending information directly to the manager of the ACO, send it to the attention of the person identified in paragraph (l)(1) of this AD. Information may be emailed to: *9-ANM-Seattle-ACO-AMOC-Requests@faa.gov.*

(2) Before using any approved AMOC, notify your appropriate principal inspector, or lacking a principal inspector, the manager of the local flight standards district office/certificate holding district office.

(3) An AMOC that provides an acceptable level of safety may be used for any repair, modification, or alteration required by this AD if it is approved by the Boeing Commercial Airplanes ODA that has been authorized by the Manager, Seattle ACO, to make those findings. To be approved, the repair method, modification deviation, or alteration deviation must meet the certification basis of the airplane and the approval must specifically refer to this AD.

(l) Related Information

(1) For more information about this AD, contact Brendan Shanley, Aerospace Engineer, Systems and Equipment Branch, ANM–130S, FAA, Seattle Aircraft Certification Office, 1601 Lind Avenue SW., Renton, WA 98057–3356; telephone: 425–917–6492; fax: 425–917–6590; email: *brendan.shanley@faa.gov.*

(2) Service information identified in this AD that is not incorporated by reference is available at the addresses specified in paragraphs (m)(3) and (m)(4) of this AD.

(m) Material Incorporated by Reference

(1) The Director of the Federal Register approved the incorporation by reference (IBR) of the service information listed in this paragraph under 5 U.S.C. 552(a) and 1 CFR part 51.

(2) You must use this service information as applicable to do the actions required by this AD, unless the AD specifies otherwise.

(i) Boeing Special Attention Service Bulletin 777–28–0061, Revision 2, dated May 4, 2015.

(ii) Boeing Service Bulletin 777–28A0034, Revision 3, dated September 25, 2015.

(3) For Boeing service information identified in this AD, contact Boeing Commercial Airplanes, Attention: Data & Services Management, P.O. Box 3707, MC 2H–65, Seattle, WA 98124–2207; telephone 206–544–5000, extension 1; fax 206–766–5680; Internet *https://www.myboeingfleet.com.*

(4) You may view this service information at FAA, Transport Airplane Directorate, 1601 Lind Avenue SW., Renton, WA. For information on the availability of this material at the FAA, call 425–227–1221.

(5) You may view this service information that is incorporated by reference at the National Archives and Records Administration (NARA). For information on the availability of this material at NARA, call 202–741–6030, or go to: *http://www.archives.gov/federal-register/cfr/ibr-locations.html.*

Issued in Renton, Washington, on October 7, 2016.

Michael Kaszycki,

Acting Manager, Transport Airplane Directorate, Aircraft Certification Service.

[FR Doc. 2016–25491 Filed 11–10–16; 8:45 am]

BILLING CODE 4910–13–P

DEPARTMENT OF JUSTICE

Drug Enforcement Administration

21 CFR Part 1308

[Docket No. DEA–440]

Schedules of Controlled Substances: Temporary Placement of U–47700 Into Schedule I

AGENCY: Drug Enforcement Administration, Department of Justice.

ACTION: Final order.

SUMMARY: The Administrator of the Drug Enforcement Administration is issuing this final order to temporarily schedule the synthetic opioid, 3,4-dichloro-*N*-[2-(dimethylamino)cyclohexyl]-*N*-methylbenzamide (also known as U–47700), and its isomers, esters, ethers, salts and salts of isomers, esters and ethers, into schedule I pursuant to the temporary scheduling provisions of the Controlled Substances Act. This action is based on a finding by the Administrator that the placement of U–47700 into schedule I of the Controlled Substances Act is necessary to avoid an imminent hazard to the public safety. As a result of this order, the regulatory controls and administrative, civil, and criminal sanctions applicable to schedule I controlled substances will be imposed on persons who handle (manufacture, distribute, reverse distribute, import, export, engage in research, conduct instructional activities or chemical analysis, or possess), or propose to handle,
U–47700.

DATES: This final order is effective on November 14, 2016.

FOR FURTHER INFORMATION CONTACT: Michael J. Lewis, Diversion Control Division, Drug Enforcement Administration; Mailing Address: 8701 Morrissette Drive, Springfield, Virginia 22152; Telephone: (202) 598–6812.

SUPPLEMENTARY INFORMATION:

Legal Authority

The Drug Enforcement Administration (DEA) implements and enforces titles II and III of the Comprehensive Drug Abuse Prevention and Control Act of 1970, as amended. 21 U.S.C. 801–971. Titles II and III are referred to as the ''Controlled Substances Act'' and the ''Controlled Substances Import and Export Act,'' respectively, and are collectively referred to as the ''Controlled Substances Act'' or the ''CSA'' for the purpose of this action. The DEA publishes the implementing regulations

for these statutes in title 21 of the Code of Federal Regulations (CFR), chapter II. The CSA and its implementing regulations are designed to prevent, detect, and eliminate the diversion of controlled substances and listed chemicals into the illicit market while ensuring an adequate supply is available for the legitimate medical, scientific, research, and industrial needs of the United States. Controlled substances have the potential for abuse and dependence and are controlled to protect the public health and safety.

Under the CSA, every controlled substance is classified into one of five schedules based upon its potential for abuse, its currently accepted medical use in treatment in the United States, and the degree of dependence the drug or other substance may cause. 21 U.S.C. 812. The initial schedules of controlled substances established by Congress are found at 21 U.S.C. 812(c), and the current list of all scheduled substances is published at 21 CFR part 1308.

Section 201 of the CSA, 21 U.S.C. 811, provides the Attorney General with the authority to temporarily place a substance into schedule I of the CSA for two years without regard to the requirements of 21 U.S.C. 811(b) if she finds that such action is necessary to avoid an imminent hazard to the public safety. 21 U.S.C. 811(h)(1). In addition, if proceedings to control a substance are initiated under 21 U.S.C. 811(a)(1), the Attorney General may extend the temporary scheduling for up to one year. 21 U.S.C. 811(h)(2).

Where the necessary findings are made, a substance may be temporarily scheduled if it is not listed in any other schedule under section 202 of the CSA, 21 U.S.C. 812, or if there is no exemption or approval in effect for the substance under section 505 of the Federal Food, Drug, and Cosmetic Act (FDCA), 21 U.S.C. 355. 21 U.S.C. 811(h)(1). The Attorney General has delegated her scheduling authority under 21 U.S.C. 811 to the Administrator of the DEA. 28 CFR 0.100.

Background

Section 201(h)(4) of the CSA, 21 U.S.C. 811(h)(4), requires the Administrator to notify the Secretary of the Department of Health and Human Services (HHS) of his intention to temporarily place a substance into schedule I of the CSA.[1] The Administrator transmitted the notice of intent to place U–47700 into schedule I on a temporary basis to the Assistant Secretary by letter dated April 18, 2016. The Assistant Secretary responded to this notice by letter dated April 28, 2016, and advised that based on review by the Food and Drug Administration (FDA), there are currently no investigational new drug applications or approved new drug applications for U–47700. The Assistant Secretary also stated that the HHS has no objection to the temporary placement of U–47700 into schedule I of the CSA. The DEA has taken into consideration the Assistant Secretary's comments as required by 21 U.S.C. 811(h)(4). U–47700 is not currently listed in any schedule under the CSA, and no exemptions or approvals are in effect for U–47700 under section 505 of the FDCA, 21 U.S.C. 355. The DEA has found that the control of U–47700 in schedule I on a temporary basis is necessary to avoid an imminent hazard to the public safety, and as required by 21 U.S.C. 811(h)(1)(A), a notice of intent to temporarily schedule U–47700 was published in the **Federal Register** on September 7, 2016. 81 FR 61636.

To find that placing a substance temporarily into schedule I of the CSA is necessary to avoid an imminent hazard to the public safety, the Administrator is required to consider three of the eight factors set forth in section 201(c) of the CSA, 21 U.S.C. 811(c): The substance's history and current pattern of abuse; the scope, duration and significance of abuse; and what, if any, risk there is to the public health. 21 U.S.C. 811(h)(3). Consideration of these factors includes actual abuse, diversion from legitimate channels, and clandestine importation, manufacture, or distribution. 21 U.S.C. 811(h)(3).

A substance meeting the statutory requirements for temporary scheduling may only be placed into schedule I. 21 U.S.C. 811(h)(1). Substances in schedule I are those that have a high potential for abuse, no currently accepted medical use in treatment in the United States, and a lack of accepted safety for use under medical supervision. 21 U.S.C. 812(b)(1). Available data and information for U–47700, summarized below, indicate that this synthetic opioid has a high potential for abuse, no currently accepted medical use in treatment in the United States, and a lack of accepted safety for use under medical supervision. The DEA's updated three-factor analysis, and the Assistant Secretary's April 28, 2016, letter, are available in their entirety under the tab ''Supporting Documents'' of the public docket of this action at *www.regulations.gov* under FDMS Docket ID: DEA–2016–0016 (Docket Number DEA–440).

Factor 4. History and Current Pattern of Abuse

The recreational abuse of novel opioids continues to be a significant concern. These substances are distributed to users with often unpredictable outcomes. The novel synthetic opioid U–47700 has recently been encountered by law enforcement and public health officials and the adverse health effects and outcomes are documented in the scientific literature. Self-reporting by users describes the effects of U–47700 to be similar to other opioids. The negative effects documented in the scientific literature are also consistent with other opioids. The National Forensic Laboratory Information System (NFLIS) is a national drug forensic laboratory reporting system that systematically collects results from drug chemistry analyses conducted by participating Federal, State, and local forensic laboratories across the country. The DEA utilizes NFLIS to monitor for drug trends. The first laboratory submission of U–47700 was recorded in October 2015; a total of 88 records were reported from State and local forensic laboratories between October 2015—September 2016 according to NFLIS (query date: October 24, 2016).

On October 1, 2014, the DEA implemented STARLiMS (a web-based, commercial laboratory information management system) as its laboratory drug evidence data system of record. DEA laboratory data submitted after September 30, 2014, are reposited in STARLiMS; data from STARLiMS were queried on November 1, 2016. STARLiMS registered 45 reports containing U–47700 in 2016 from California, Connecticut, Florida, Maryland, Montana, North Dakota, New Jersey, New York, Tennessee, Texas, Virginia, West Virginia, and the District of Columbia. Through information collected from NFLIS, law enforcement reports, and email communications, the DEA is aware of the identification of U–47700 from toxicology reports and submitted evidence to forensic laboratories in several states, including Arkansas, California, Colorado, Connecticut, Florida, Georgia, Iowa, Kentucky, Missouri, Montana, New

[1] As discussed in a memorandum of understanding entered into by the Food and Drug Administration (FDA) and the National Institute on Drug Abuse (NIDA), the FDA acts as the lead agency within the HHS in carrying out the Secretary's scheduling responsibilities under the CSA, with the concurrence of NIDA. 50 FR 9518, Mar. 8, 1985. The Secretary of the HHS has delegated to the Assistant Secretary for Health of the HHS the authority to make domestic drug scheduling recommendations. 58 FR 35460, July 1, 1993.

Hampshire, New Jersey, New York, North Carolina, North Dakota, Ohio, Oklahoma, Oregon, Pennsylvania, Texas, and Wisconsin. These identifications occurred in 2015 and 2016.

Evidence suggests that the pattern of abuse of U–47700 parallels that of heroin, prescription opioid analgesics, and other novel opioids. Seizures of U–47700 have been encountered in powder form and in counterfeit tablets that mimic pharmaceutical opioids. U–47700 has also been encountered in glassine bags and envelopes and knotted corners of plastic bags. These clandestine forms of distribution demonstrate the abuse of this substance as a replacement for heroin or other opioids, either knowingly or unknowingly. Further, U–47700 has been encountered as a single substance as well as in combination with other substances, including heroin, fentanyl, and furanyl fentanyl in drug exhibits.

The scientific literature and information collected by DEA demonstrate U–47700 is being abused for its opioid properties. The distribution of U–47700 and the increased prevalence of abuse remain deeply concerning to the DEA.

Factor 5. Scope, Duration and Significance of Abuse

The scientific literature and reports collected by the DEA demonstrate U–47700 is being abused for its opioid properties. This abuse of U–47700 has resulted in morbidity and mortality (see updated DEA 3-Factor Analysis for full discussion). The DEA has received reports for at least 46 confirmed fatalities [2] associated with U–47700. The information on these deaths occurring in 2015 and 2016 was collected from email communications and toxicology and medical examiner reports and was reported from New Hampshire (1), New York (31), North Carolina (10), Ohio (1), Texas (2), and Wisconsin (1). The scientific literature notes additional fatal overdoses connected to U–47700. The population likely to abuse U–47700 appears to overlap with the populations abusing prescription opioid analgesics, other ''designer opioids,'' and heroin, as evidenced by drug use history documented in U–47700 fatal overdose cases. This observation is further supported by U–47700 being sold on the illicit market in glassine bags, some of which are marked with stamped logos, imitating the sale of heroin.

[2] Due to a proofreading error, the number of fatalities listed in the U–47700 NOI, which was 15, is incorrect. The correct number, 46, has been added to this Final Order.

Additionally, U–47700 has been found in counterfeit pills. Because abusers of U–47700 are likely to obtain this substance through non-regulated sources (*i.e.*, on-line purchases or drug dealers), the identity, purity, and quantity are uncertain and inconsistent, thus posing significant adverse health risks to the end user. Individuals who initiate (*i.e.*, use a drug for the first time) U–47700 abuse are likely to be at risk of developing substance use disorder, overdose, and death similar to that of other opioid analgesics (*e.g.*, fentanyl, morphine, etc.).

STARLiMS contains 45 reports in which U–47700 was identified in drug exhibits submitted in 2016. A query of NFLIS returned 88 records of U–47700 being identified in exhibits submitted to State and local forensic laboratories between October 2015—September 2016. The DEA is not aware of any laboratory analyses of drug evidence identifying U–47700 prior to 2015, indicating that this synthetic opioid only recently became available as a replacement for other opioids that are commonly abused (*i.e.* oxycodone, heroin, fentanyl). U–47700 is available over the Internet and is marketed as a ''research chemical.'' The on-line sale and marketing of U–47700 are similar to other new psychoactive substances that have rapidly appeared on the recreational drug market and also resulted in negative consequences for the user.

Factor 6. What, if Any, Risk There Is to the Public Health

U–47700 exhibits pharmacological profiles similar to that of morphine and other mu-opioid receptor agonists. Cases of intoxication are reported in the literature with morbidity and mortality associated with U–47700 use. The toxic effects of U–47700 in humans are demonstrated by overdoses and overdose fatalities associated with this substance, as reported in the scientific literature. Abusers of U–47700 may not know the origin, identity, or purity of this substance, thus posing significant adverse health risks when compared to abuse of pharmaceutical preparations of opioid analgesics, such as morphine and oxycodone. Additionally, the potent opioid U–47700 may serve as a precursor to problematic opioid use and dependence.

Based on reports in the scientific literature and information received by the DEA, the abuse of U–47700 leads to the same qualitative public health risks as heroin, fentanyl and other opioid analgesic substances. As with any non-medically approved opioid, the health and safety risks for users are great. The public health risks attendant to the abuse of heroin and opioid analgesics are well established and have resulted in large numbers of drug treatment admissions, emergency department visits, and fatal overdoses.

U–47700 has been associated with a number of fatalities and non-fatal overdoses as detailed in the scientific literature. The DEA has received information connecting U–47700 to at least 46 confirmed overdose deaths, occurring in 2015 and 2016 in New Hampshire (1), New York (31), North Carolina (10), Ohio (1), Texas (2), and Wisconsin (1).

Finding of Necessity of Schedule I Placement To Avoid Imminent Hazard to Public Safety

In accordance with 21 U.S.C. 811(h)(3), based on the data and information summarized above, the continued uncontrolled manufacture, distribution, importation, exportation, and abuse of U–47700 pose an imminent hazard to the public safety. The DEA is not aware of any currently accepted medical uses for this substance in the United States. A substance meeting the statutory requirements for temporary scheduling, 21 U.S.C. 811(h)(1), may only be placed into schedule I. Substances in schedule I are those that have a high potential for abuse, no currently accepted medical use in treatment in the United States, and a lack of accepted safety for use under medical supervision. Available data and information for U–47700 indicate that this substance has a high potential for abuse, no currently accepted medical use in treatment in the United States, and a lack of accepted safety for use under medical supervision. As required by section 201(h)(4) of the CSA, 21 U.S.C. 811(h)(4), the Administrator, through a letter dated April 18, 2016, notified the Assistant Secretary of the DEA's intention to temporarily place this substance into schedule I.

Conclusion

In accordance with the provisions of section 201(h) of the CSA, 21 U.S.C. 811(h), the Administrator considered available data and information, herein sets forth the grounds for his determination that it is necessary to temporarily schedule U–47700 into schedule I of the CSA, and finds that placement of this synthetic opioid into schedule I of the CSA is necessary to avoid an imminent hazard to the public safety. Because the Administrator hereby finds it necessary to temporarily place this synthetic opioid into schedule I to avoid an imminent hazard

to the public safety, this final order temporarily scheduling U–47700 will be effective on the date of publication in the **Federal Register**, and will be in effect for a period of two years, with a possible extension of one additional year, pending completion of the regular (permanent) scheduling process. 21 U.S.C. 811(h) (1) and (2).

The CSA sets forth specific criteria for scheduling a drug or other substance. Permanent scheduling actions in accordance with 21 U.S.C. 811(a) are subject to formal rulemaking procedures done ''on the record after opportunity for a hearing'' conducted pursuant to the provisions of 5 U.S.C. 556 and 557. 21 U.S.C. 811. The permanent scheduling process of formal rulemaking affords interested parties with appropriate process and the government with any additional relevant information needed to make a determination. Final decisions that conclude the permanent scheduling process of formal rulemaking are subject to judicial review. 21 U.S.C. 877. Temporary scheduling orders are not subject to judicial review. 21 U.S.C. 811(h)(6).

Requirements for Handling

Upon the effective date of this final order, U–47700 will become subject to the regulatory controls and administrative, civil, and criminal sanctions applicable to the manufacture, distribution, reverse distribution, importation, exportation, engagement in research, and conduct of instructional activities or chemical analysis with, and possession of schedule I controlled substances including the following:

1. *Registration.* Any person who handles (manufactures, distributes, reverse distributes, imports, exports, engages in research, or conducts instructional activities or chemical analysis with, or possesses), or who desires to handle, U–47700 must be registered with the DEA to conduct such activities pursuant to 21 U.S.C. 822, 823, 957, and 958 and in accordance with 21 CFR parts 1301 and 1312, as of November 14, 2016. Any person who currently handles U–47700, and is not registered with the DEA, must submit an application for registration and may not continue to handle U–47700 as of November 14, 2016, unless the DEA has approved that application for registration pursuant to 21 U.S.C. 822, 823, 957, 958, and in accordance with 21 CFR parts 1301 and 1312. Retail sales of schedule I controlled substances to the general public are not allowed under the CSA. Possession of any quantity of this substance in a manner not authorized by the CSA on or after November 14, 2016 is unlawful and those in possession of any quantity of this substance may be subject to prosecution pursuant to the CSA.

2. *Disposal of stocks.* Any person who does not desire or is not able to obtain a schedule I registration to handle U–47700, must surrender all quantities of currently held U–47700.

3. *Security.* U–47700 is subject to schedule I security requirements and must be handled and stored pursuant to 21 U.S.C. 821, 823, 871(b), and in accordance with 21 CFR 1301.71–1301.93, as of November 14, 2016.

4. *Labeling and packaging.* All labels, labeling, and packaging for commercial containers of U–47700 must be in compliance with 21 U.S.C. 825, 958(e), and be in accordance with 21 CFR part 1302. Current DEA registrants shall have 30 calendar days from November 14, 2016, to comply with all labeling and packaging requirements.

5. *Inventory.* Every DEA registrant who possesses any quantity of U–47700 on the effective date of this order must take an inventory of all stocks of this substance on hand, pursuant to 21 U.S.C. 827 and 958, and in accordance with 21 CFR 1304.03, 1304.04, and 1304.11. Current DEA registrants shall have 30 calendar days from the effective date of this order to be in compliance with all inventory requirements. After the initial inventory, every DEA registrant must take an inventory of all controlled substances (including U–47700) on hand on a biennial basis, pursuant to 21 U.S.C. 827 and 958, and in accordance with 21 CFR 1304.03, 1304.04, and 1304.11.

6. *Records.* All DEA registrants must maintain records with respect to U–47700 pursuant to 21 U.S.C. 827 and 958, and in accordance with 21 CFR parts 1304, and 1312, 1317 and § 1307.11. Current DEA registrants shall have 30 calendar days from the effective date of this order to be in compliance with all recordkeeping requirements.

7. *Reports.* All DEA registrants who manufacture or distribute U–47700 must submit reports pursuant to 21 U.S.C. 827 and in accordance with 21 CFR parts 1304, and 1312 as of November 14, 2016.

8. *Order Forms.* All DEA registrants who distribute U–47700 must comply with order form requirements pursuant to 21 U.S.C. 828 and in accordance with 21 CFR part 1305 as of November 14, 2016.

9. *Importation and Exportation.* All importation and exportation of U–47700 must be in compliance with 21 U.S.C. 952, 953, 957, 958, and in accordance with 21 CFR part 1312 as of November 14, 2016.

10. *Quota.* Only DEA registered manufacturers may manufacture U–47700 in accordance with a quota assigned pursuant to 21 U.S.C. 826 and in accordance with 21 CFR part 1303 as of November 14, 2016.

11. *Liability.* Any activity involving U–47700 not authorized by, or in violation of the CSA, occurring as of November 14, 2016, is unlawful, and may subject the person to administrative, civil, and/or criminal sanctions.

Regulatory Matters

Section 201(h) of the CSA, 21 U.S.C. 811(h), provides for a temporary scheduling action where such action is necessary to avoid an imminent hazard to the public safety. As provided in this subsection, the Attorney General may, by order, schedule a substance in schedule I on a temporary basis. Such an order may not be issued before the expiration of 30 days from (1) the publication of a notice in the **Federal Register** of the intention to issue such order and the grounds upon which such order is to be issued, and (2) the date that notice of the proposed temporary scheduling order is transmitted to the Assistant Secretary. 21 U.S.C. 811(h)(1).

Inasmuch as section 201(h) of the CSA directs that temporary scheduling actions be issued by order and sets forth the procedures by which such orders are to be issued, the DEA believes that the notice and comment requirements of the Administrative Procedure Act (APA) at 5 U.S.C. 553, do not apply to this temporary scheduling action. In the alternative, even assuming that this action might be subject to 5 U.S.C. 553, the Administrator finds that there is good cause to forgo the notice and comment requirements of 5 U.S.C. 553, as any further delays in the process for issuance of temporary scheduling orders would be impracticable and contrary to the public interest in view of the manifest urgency to avoid an imminent hazard to the public safety.

Further, the DEA believes that this temporary scheduling action is not a ''rule'' as defined by 5 U.S.C. 601(2), and, accordingly, is not subject to the requirements of the Regulatory Flexibility Act. The requirements for the preparation of an initial regulatory flexibility analysis in 5 U.S.C. 603(a) are not applicable where, as here, the DEA is not required by the APA or any other law to publish a general notice of proposed rulemaking.

Additionally, this action is not a significant regulatory action as defined by Executive Order 12866 (Regulatory Planning and Review), section 3(f), and, accordingly, this action has not been

reviewed by the Office of Management and Budget (OMB).

This action will not have substantial direct effects on the States, on the relationship between the national government and the States, or on the distribution of power and responsibilities among the various levels of government. Therefore, in accordance with Executive Order 13132 (Federalism) it is determined that this action does not have sufficient federalism implications to warrant the preparation of a Federalism Assessment.

As noted above, this action is an order, not a rule. Accordingly, the Congressional Review Act (CRA) is inapplicable, as it applies only to rules. However, if this were a rule, pursuant to the Congressional Review Act, ''any rule for which an agency for good cause finds that notice and public procedure thereon are impracticable, unnecessary, or contrary to the public interest, shall take effect at such time as the federal agency promulgating the rule determines.'' 5 U.S.C. 808(2). It is in the public interest to schedule this substance immediately because it poses a public health risk. This temporary scheduling action is taken pursuant to 21 U.S.C. 811(h), which is specifically designed to enable the DEA to act in an expeditious manner to avoid an imminent hazard to the public safety. 21 U.S.C. 811(h) exempts the temporary scheduling order from standard notice and comment rulemaking procedures to ensure that the process moves swiftly. For the same reasons that underlie 21 U.S.C. 811(h), that is, the DEA's need to move quickly to place this substance into schedule I because it poses an imminent hazard to the public safety and it would be contrary to the public interest to delay implementation of the temporary scheduling order. Therefore, this order shall take effect immediately upon its publication. The DEA has submitted a copy of this final order to both Houses of Congress and to the Comptroller General, although such filing is not required under the Small Business Regulatory Enforcement Fairness Act of 1996 (Congressional Review Act), 5 U.S.C. 801–808, because, as noted above, this action is an order, not a rule.

List of Subjects in 21 CFR Part 1308

Administrative practice and procedure, Drug traffic control, Reporting and recordkeeping requirements.

For the reasons set out above, the DEA amends 21 CFR part 1308 as follows:

PART 1308—SCHEDULES OF CONTROLLED SUBSTANCES

■ 1. The authority citation for part 1308 continues to read as follows:

Authority: 21 U.S.C. 811, 812, 871(b), unless otherwise noted.

■ 2. Amend § 1308.11 by adding paragraph (h)(18) to read as follows:

§ 1308.11 Schedule I.

* * * * *

(h) * * *

(18) 3,4-Dichloro-*N*-[2-(dimethylamino)cyclohexyl]-*N*-methylbenzamide, its isomers, esters, ethers, salts and salts of isomers, esters and ethers (Other name: U–47700) ..... (9547)

* * * * *

Dated: November 7, 2016.

Chuck Rosenberg,

Acting Administrator.

[FR Doc. 2016–27357 Filed 11–10–16; 8:45 am]

BILLING CODE 4410–09–P

DEPARTMENT OF HOMELAND SECURITY

Coast Guard

33 CFR Part 117

[Docket No. USCG–2016–1008]

Drawbridge Operation Regulation; Great Channel, New Jersey Intracoastal Waterway, Stone Harbor, NJ

AGENCY: Coast Guard, DHS.

ACTION: Notice of deviation from drawbridge regulation.

SUMMARY: The Coast Guard has issued a temporary deviation from the operating schedule that governs the Stone Harbor Boulevard (CR657) Bridge across the Great Channel, mile 102.0, New Jersey Intracoastal Waterway, at Stone Harbor, NJ. This deviation is necessary to avoid bridge failure and perform emergency bridge repairs. This deviation allows the bridge to remain in the closed-to-navigation position.

DATES: This deviation is effective without actual notice from November 14, 2016 through 4 p.m. on December 2, 2016. For the purposes of enforcement, actual notice will be used from November 8, 2016, until November 14, 2016.

ADDRESSES: The docket for this deviation, [USCG–2016–1008] is available at *http://www.regulations.gov.* Type the docket number in the ''SEARCH'' box and click ''SEARCH''. Click on Open Docket Folder on the line associated with this deviation.

FOR FURTHER INFORMATION CONTACT: If you have questions on this temporary deviation, call or email Mr. Hal R. Pitts, Bridge Administration Branch Fifth District, Coast Guard, telephone 757–398–6222, email *Hal.R.Pitts@uscg.mil.*

SUPPLEMENTARY INFORMATION: The County of Cape May, NJ, that owns and operates the Stone Harbor Boulevard (CR657) Bridge across the Great Channel, mile 102.0, New Jersey Intracoastal Waterway, at Stone Harbor, NJ, has requested a temporary deviation from the current operating regulations to avoid bridge failure and perform emergency repairs to the bridge, due to a serious crack in one of two main bridge girders, causing the bridge to be unsafe for vehicular traffic and movement of the bascule spans. The bridge is a bascule drawbridge and has a vertical clearance in the closed position of 10 feet above mean high water.

The current operating schedule is set out in 33 CFR 117.733(h). Under this temporary deviation, the bridge will remain in the closed-to-navigation position until 4 p.m. on December 2, 2016.

The Great Channel, New Jersey Intracoastal Waterway is used by a variety of vessels including small public vessels, small commercial vessels, tug and barge traffic, and recreational vessels. The Coast Guard has carefully considered the nature and volume of vessel traffic on the waterway in publishing this temporary deviation.

Vessels able to safely pass through the bridge in the closed position may do so at any time. The bridge will not be able to open for emergencies and there is no immediate alternate route for vessels to pass. The Coast Guard will also inform the users of the waterways through our Local and Broadcast Notices to Mariners of the change in operating schedule for the bridge so that vessel operators can arrange their transit to minimize any impact caused by the temporary deviation.

In accordance with 33 CFR 117.35(e), the drawbridge must return to its regular operating schedule immediately at the end of the effective period of this temporary deviation. This deviation from the operating regulations is authorized under 33 CFR 117.35.

Dated: November 8, 2016.

Hal R. Pitts,

Bridge Program Manager, Fifth Coast Guard District.

[FR Doc. 2016–27281 Filed 11–10–16; 8:45 am]

BILLING CODE 9110–04–P

Proposed Rules

Federal Register

Vol. 81, No. 219

Monday, November 14, 2016

This section of the FEDERAL REGISTER contains notices to the public of the proposed issuance of rules and regulations. The purpose of these notices is to give interested persons an opportunity to participate in the rule making prior to the adoption of the final rules.

DEPARTMENT OF COMMERCE

Economic Development Administration

13 CFR Parts 300, 301, 302, 303, 304, 305, 307, 309, and 314

Webinar on Notice of Proposed Rulemaking, Revolving Loan Fund Program Changes and General Updates to PWEDA Regulations

AGENCY: Economic Development Administration, U.S. Department of Commerce.

ACTION: Notice.

SUMMARY: The Economic Development Administration (''EDA''), U.S. Department of Commerce (''DOC''), will hold a webinar to discuss proposed updates to the agency's regulations implementing the Public Works and Economic Development Act of 1965, as amended (''PWEDA''). On October 3, 2016, EDA published a Notice of Proposed Rulemaking (''NPRM'') in the **Federal Register** at 81 FR 68186. Through this NPRM, EDA is proposing important changes to the regulations governing the Revolving Loan Fund (''RLF'') program that are intended to reflect current best practices and strengthen EDA's efforts to evaluate, monitor, and improve RLF performance by establishing the Risk Analysis System, a risk-based management framework, to evaluate and manage the RLF program. EDA also proposes to reorganize the RLF regulations to improve their readability and clarify the requirements that apply to the distinct phases of an RLF award. In addition, EDA proposes specific changes to RLF requirements to make RLF awards more efficient for Recipients to administer and for EDA to monitor. Through this NPRM EDA proposes important, but less comprehensive updates to other parts of its regulations, including revising definitions, replacing references to superseded regulations to reflect the promulgation of the Uniform Administrative Requirements, Cost Principles, and Audit Requirements (2 CFR part 200) (''Uniform Guidance''), streamlining the provisions that outline EDA's application process, and clarifying EDA's property management regulations. Given the more comprehensive nature of the changes being proposed to the RLF program, EDA will use this webinar to focus on the proposed RLF changes and explain both the rationale behind those changes and their potential impact. All members of the public are invited to participate.

DATES: The webinar will be held on Tuesday, November 15, 2016, at 2 p.m. Eastern Standard Time.

ADDRESSES: The webinar will be held through Adobe Connect. No registration is required to participate.

You may join the webinar using the following link: *https://doc-eda.adobeconnect.com/rlf-nprmwebinar/*.

To join by audio conference, please dial the following number: 800–832–0736. When prompted, please enter the following Conference Room Number: 4130458

FOR FURTHER INFORMATION CONTACT: If you have questions about the meeting, please contact Mitchell Harrison, Program Analyst, Performance and National Programs Division, Economic Development Administration, U.S. Department of Commerce, 1401 Constitution Avenue NW., Suite 71030, Washington, DC 20230; telephone: (202) 482–4696.

SUPPLEMENTARY INFORMATION:

a. *What is the agenda for the webinar?* The agenda for the webinar includes: (1) Introduction by Tom Guevara, Deputy Assistant Secretary for Regional Affairs, EDA, (2) overview of the RLF program, (3) explanation of key RLF changes proposed in the NRPM, and (4) public questions and comments.

b. *Will the webinar be recorded?* Following the webinar, a recording of the webinar will be posted on EDA's YouTube page at *https://www.youtube.com/user/EDACommerce*.

c. *May I submit questions or comments during the webinar?* You may submit a written comment or question during the presentation. We have scheduled the last fifteen minutes of the meeting, from 2:45 to 3 p.m., to address questions or comments from the public. Please note that this public question and comment period may start before 2:45 p.m. if all other agenda items have been covered and may end before 3 p.m. if we have responded to all submitted questions before that time.

d. *What do I do if I need additional assistance during the webinar?* For information on facilities or services for individuals with disabilities or to request special assistance at the teleconference, please contact the individual listed in the **FOR FURTHER INFORMATION CONTACT** section, as soon as possible.

e. *Can I submit questions after the webinar?* In addition to submitting questions or comments during the webinar, members of the public may also submit a comment in writing until December 2, 2016, as indicated in the NPRM, using one of the following methods:

- *Federal eRulemaking Portal: http://www.regulations.gov*. Follow the instructions for submitting comments. All comments received are a part of the public record and will generally be posted for public viewing on *www.regulations.gov* without change. All personal identifying information (*e.g.,* name, address, etc.), confidential business information, or otherwise sensitive information submitted voluntarily by the sender will be publicly accessible. EDA will accept anonymous comments (enter ''N/A'' in the required fields if you wish to remain anonymous).
- *Email: regulations@eda.gov*. Include ''Comments on EDA's regulations'' and Docket No. 160519444–6444–01 in the subject line of the message.
- *Fax:* (202) 482–5671. Please indicate ''Attention: Office of Chief Counsel,'' ''Comments on EDA's regulations,'' and Docket No. 160519444–6444–01 on the cover page.
- *Mail:* Office of the Chief Counsel, Economic Development Administration, U.S. Department of Commerce, 1401 Constitution Avenue NW., Suite 72023, Washington, DC 20230. Please indicate ''Comments on EDA's regulations'' and Docket No. 160519444–6444–01 on the envelope.

Dated: November 2, 2016.

Roy K.J. Williams,

Assistant Secretary of Commerce for Economic Development.

[FR Doc. 2016–27293 Filed 11–10–16; 8:45 am]

BILLING CODE 3510–24–P

DEPARTMENT OF TRANSPORTATION

Federal Aviation Administration

14 CFR Part 39

[Docket No. FAA–2015–3984; Directorate Identifier 2015–NM–033–AD]

RIN 2120–AA64

Airworthiness Directives; The Boeing Company Airplanes

AGENCY: Federal Aviation Administration (FAA), DOT.

ACTION: Supplemental notice of proposed rulemaking (SNPRM); reopening of comment period.

SUMMARY: We are revising an earlier proposal to supersede Airworthiness Directive (AD) 2008–13–12 R1, for certain The Boeing Company Model 737–100, –200, –200C, –300, –400, and –500 series airplanes. AD 2008–13–12 R1 requires various repetitive inspections for cracking of the upper-frame-to-side-frame splice of the fuselage, and other specified and corrective actions if necessary; and also provides for an optional preventive modification, which would terminate the repetitive inspections. This action revises the notice of proposed rulemaking (NPRM) by adding post-repair/post-modification inspections. We are proposing this SNPRM to detect and correct fatigue cracking of the upper-frame-to-side-frame splice of the fuselage, which could result in reduced structural integrity of the frame and adjacent lap joint, causing increased loading in the fuselage skin, which will accelerate skin crack growth and result in decompression of the airplane. Since these actions impose an additional burden over that proposed in the NPRM, we are reopening the comment period to allow the public the chance to comment on these proposed changes.

DATES: We must receive comments on this SNPRM by December 29, 2016.

ADDRESSES: You may send comments, using the procedures found in 14 CFR 11.43 and 11.45, by any of the following methods:

- *Federal eRulemaking Portal:* Go to *http://www.regulations.gov.* Follow the instructions for submitting comments.
- *Fax:* 202–493–2251.
- *Mail:* U.S. Department of Transportation, Docket Operations, M–30, West Building Ground Floor, Room W12–140, 1200 New Jersey Avenue SE., Washington, DC 20590.
- *Hand Delivery:* U.S. Department of Transportation, Docket Operations, M–30, West Building Ground Floor, Room W12–140, 1200 New Jersey Avenue SE., Washington, DC 20590, between 9 a.m. and 5 p.m., Monday through Friday, except Federal holidays.

For service information identified in this SNPRM, contact Boeing Commercial Airplanes, Attention: Data & Services Management, P.O. Box 3707, MC 2H–65, Seattle, WA 98124–2207; telephone 206–544–5000, extension 1; fax 206–766–5680; Internet *https://www.myboeingfleet.com.* You may view this referenced service information at the FAA, Transport Airplane Directorate, 1601 Lind Avenue SW., Renton, WA. For information on the availability of this material at the FAA, call 425–227–1221. It is also available on the Internet at *http://www.regulations.gov* by searching for and locating Docket No. FAA–2015–3984.

Examining the AD Docket

You may examine the AD docket on the Internet at *http://www.regulations.gov* by searching for and locating Docket No. FAA–2015–3984; or in person at the Docket Management Facility between 9 a.m. and 5 p.m., Monday through Friday, except Federal holidays. The AD docket contains this proposed AD, the regulatory evaluation, any comments received, and other information. The street address for the Docket Office (phone: 800–647–5527) is in the **ADDRESSES** section. Comments will be available in the AD docket shortly after receipt.

FOR FURTHER INFORMATION CONTACT: Wayne Lockett, Aerospace Engineer, Airframe Branch, ANM–120S, FAA, Seattle Aircraft Certification Office, 1601 Lind Avenue SW., Renton, WA 98057–3356; phone: 425–917–6447; fax: 425–917–6590; email: *wayne.lockett@faa.gov.*

SUPPLEMENTARY INFORMATION:

Comments Invited

We invite you to send any written relevant data, views, or arguments about this proposed AD. Send your comments to an address listed under the **ADDRESSES** section. Include ''Docket No. FAA–2015–3984; Directorate Identifier 2015–NM–033–AD'' at the beginning of your comments. We specifically invite comments on the overall regulatory, economic, environmental, and energy aspects of this proposed AD. We will consider all comments received by the closing date and may amend this proposed AD because of those comments.

We will post all comments we receive, without change, to *http://www.regulations.gov,* including any personal information you provide. We will also post a report summarizing each substantive verbal contact we receive about this proposed AD.

Discussion

We issued an NPRM to amend 14 CFR part 39 to supersede AD 2008–13–12 R1, Amendment 39–15719 (73 FR 67383, November 14, 2008) (''AD 2008–13–12 R1''). AD 2008–13–12 R1 applied to certain The Boeing Company Model 737–100, –200, –200C, –300, –400, and –500 series airplanes. AD 2008–13–12 R1 requires various repetitive inspections for cracking of the upper-frame-to-side-frame splice of the fuselage, and other specified and corrective actions if necessary. AD 2008–13–12 R1 also provides for an optional preventive modification, which terminates the repetitive inspections. AD 2008–13–12 R1 resulted from a report that the upper frame of the fuselage was severed between stringers (S) S–13L and S–14L at station (STA) 747, and the adjacent frame at STA 767 had a 1.3-inch-long crack at the same stringer location. The NPRM published in the **Federal Register** on October 9, 2015 (80 FR 61133) (''The NPRM''). The NPRM was prompted by reports of additional fatigue cracking of the upper-frame-to-side-frame splice of the fuselage, and one report of a severed frame. The NPRM proposed to add, for certain airplanes, an inspection to determine if the existing frame repair meets all specified requirements, and for certain other airplanes, a new modification of the upper-frame-to-side-frame splice, which would terminate the repetitive inspections. The NPRM also proposed to reduce certain inspection thresholds and repetitive intervals.

Actions Since Previous NPRM Was Issued

Since we issued the NPRM, we have determined that it is necessary to require post-repair/post-modification inspections that were not included in the NPRM.

Related Service Information Under 1 CFR Part 51

We reviewed Boeing Alert Service Bulletin 737–53A1261, Revision 1, dated January 30, 2015. The service information describes procedures for various repetitive inspections for cracking of the upper-frame-to-side-frame splice of the fuselage, a preventive modification to prevent WFD, an inspection to determine if the existing frame repair meets all specified requirements, and corrective actions. This service information is reasonably available because the interested parties

have access to it through their normal course of business or by the means identified in the **ADDRESSES** section.

Comments

We gave the public the opportunity to comment on the NPRM. The following presents the comments received on the NPRM and the FAA's response to each comment. One commenter supported the actions specified in the NPRM.

Request To Require Post-Repair/Post-Modification Inspections

Boeing asked that we change paragraph (j) of the proposed AD (in the NPRM) to require the post-repair/post-modification inspections that are not required in that paragraph. Boeing stated that the WFD evaluation of the frame repair/modification specified in Boeing Alert Service Bulletin 737–53A1261, Revision 1, dated January 30, 2015, indicated the need for reduced repetitive inspection intervals from those provided in Boeing Damage Tolerance Inspection Data Service Bulletin 737–00–1006, dated March 12, 2010. Boeing added that since the inspections specified in Boeing Service Bulletin 737–00–1006, dated March 12, 2010, are not to be used for the post-repair/post-modification inspections required by 14 CFR 121.1109(c)(2) or 129.109(c)(2), they should be required by paragraph (j) of the proposed AD.

We agree with the commenter for the reasons provided. We have changed paragraph (j) of this SNPRM to require that post-repair/post-modification inspections be done in accordance with the Accomplishment Instructions of Boeing Alert Service Bulletin 737–53A1261, Revision 1, dated January 30, 2015.

Effect of Winglets on Accomplishment of the Proposed Actions

Aviation Partners Boeing stated that accomplishing the Supplemental Type Certificate (STC) ST01219SE does not affect the actions specified in the NPRM.

We agree with the commenter. We have changed paragraph (c) of this proposed AD to state that installation of STC ST01219SE does not affect the ability to accomplish the actions required by this final rule. Therefore, for airplanes on which STC ST01219SE is installed, a ''change in product'' alternative methods of compliance (AMOC) approval request is not necessary to comply with the requirements of 14 CFR 39.17.

Request To Clarify That the NPRM Addresses WFD

Boeing asked that we update the language in ''Actions Since AD 2008–13–12 R1, Amendment 39–15719 (73 FR 67383, November 14, 2008) Was Issued'' section of the NPRM to clarify that this action is intended to address WFD by supporting the airplane's limit of validity (LOV). Boeing noted that a recently issued WFD-related AD action used different language regarding WFD. Boeing stated that Boeing Alert Service Bulletin 737–53A1261, Revision 1, dated January 30, 2015, was released in support of the requirements of 14 CFR 26.21(b) and (c) and provides additional service action required to support LOV.

We agree to provide clarification. The NPRM addressed WFD in several locations in the preamble. To clarify, this action is intended to address WFD by supporting the airplane's LOV, as stated by Boeing. However, we have not updated the language in that section of the NPRM because that section of the NPRM is not carried over to this SNPRM. Therefore, no change to this SNPRM is necessary in this regard.

Request To Clarify Certain Procedures in the Related Service Information Section

Boeing asked that we change the ''Related Service Information under 1 CFR part 51'' section in the NPRM to clarify the description of the modification procedures in the service information. Boeing asked that the proposed language ''. . . a new preventive modification, which would eliminate the need for the repetitive inspections'' be changed to ''. . . a preventive modification to prevent the WFD.'' Boeing stated that Boeing Alert Service Bulletin 737–53A1261, Revision 1, dated January 30, 2015, retains all inspections specified in Boeing Alert Service Bulletin 737–53A1261, dated January 19, 2006, and mandates the previously optional preventive modification to mitigate the WFD concern.

We agree with the commenter for the reasons provided. We have clarified the ''Related Service Information under 1 CFR part 51'' section of this SNPRM accordingly.

Request To Clarify Reason for Supersedure

Boeing asked that we clarify in the **SUMMARY** section of the NPRM the events that prompted the proposed supersedure of AD 2008–13–12 R1. Boeing stated that instead of two reports of severed frames, as specified in the NPRM, there was just one report of a severed frame.

We agree to provide clarification. We agree that the commenter's statement is accurate. However, we have removed details relating to the NPRM from the **SUMMARY** section of this SNPRM; therefore, no change is necessary to this SNPRM in this regard.

Request To Clarify Provisions Related to Repetitive Actions

Boeing asked that we clarify paragraph (g)(1)(ii) of the proposed AD (in the NPRM) to state that the actions are to be repeated until the preventive modification in paragraph (k) or the terminating action in paragraph (l) of the proposed AD has been accomplished. Boeing added that this change is consistent with the provisions of Boeing Alert Service Bulletin 737–53A1261, Revision 1, dated January 30, 2015, and the requirements of AD 2008–13–12 R1.

We agree with the commenter for the reasons provided. We have clarified paragraph (g)(1)(ii) of this proposed AD accordingly.

Request To Clarify Inspection Locations

Boeing asked that we change paragraph (g)(2)(i) of the proposed AD (in the NPRM) to clarify that the inspections are for ''existing frame repairs,'' instead of ''frames.'' Boeing requested that we change ''frame'' to ''frame repairs,'' and ''tied frames'' to ''existing frame repairs.''

We agree with the commenter. We have revised paragraph (g)(2)(i) of this proposed AD accordingly.

Request To Revise Inspection Type

Boeing asked that we revise paragraphs (k) and (l) of the proposed AD (in the NPRM) by changing ''detailed and HFEC inspections'' to just ''HFEC inspections.'' Boeing stated that detailed inspections are not specified during accomplishment of the preventive modification in Boeing Alert Service Bulletin 737–53A1261, Revision 1, dated January 30, 2015.

We agree with the commenter for the reason provided. We have removed ''detailed'' inspections from paragraphs (k) and (l) of this proposed AD.

Request To Change Certain Language in Paragraph (l)(2) of the Proposed AD

Boeing asked that we change paragraph (l)(2) of the proposed AD (in the NPRM), which stated that the repair would terminate the repetitive inspections required by paragraph (g)(1) of this AD. Boeing requested that the proposed AD instead state that the repair would terminate not only the repetitive inspections, but also the preventive modification required by

paragraph (k) of the proposed AD. Boeing added that Boeing Alert Service Bulletin 737–53A1261, Revision 1, dated January 30, 2015, provides a terminating action provision for the repetitive inspections and the preventive modification under the repair. Boeing stated that accomplishment of the repair removes the WFD, and therefore the preventive modification is not required for repaired frames.

We agree with the commenter for the reasons provided. We have clarified the language in paragraph (l)(2) of this proposed AD accordingly.

Request To Move Terminating Action in Paragraph (l)(3) of the Proposed AD to the Credit Paragraph

Boeing asked that we move the terminating action specified in paragraph (l)(3) of the proposed AD (in the NPRM) into the credit for previous actions specified in paragraph (m) of the proposed AD (in the NPRM) for clarification. Boeing stated that accomplishment of the repair or preventive modification, as specified in Boeing Message M–7200–02–1294, dated August 20, 2002, is a ''previous action'' similar to accomplishment of the repair or preventive modification specified in Boeing Alert Service Bulletin 737–53A1261, dated January 19, 2006. Boeing added that paragraph (l)(3) of the proposed AD (in the NPRM) stated that the repair or preventive modification done before the effective date of the AD terminates the repetitive inspection requirements of paragraph (g)(1) of the proposed AD (in the NPRM). Boeing also asked that we revise the proposed AD (in the NPRM) to state that accomplishment of the repair or preventive modification in accordance with Boeing Message M–7200–02–1294, dated August 20, 2002, if performed before the effective date of the AD, would also terminate the preventive modification required by paragraph (k) of the proposed AD (in the NPRM).

We agree to revise paragraph (l)(3) of this proposed AD to state that a repair or preventive modification done in accordance with Boeing Message M–7200–02–1294, dated August 20, 2002, is acceptable for terminating both the inspections and the preventive modification requirements in paragraphs (g)(1) and (k) of this proposed AD respectively. We have changed paragraph (l)(3) of this proposed AD accordingly.

We do not agree to move paragraph (l)(3) of the proposed AD (in the NPRM) into the credit for previous actions specified in paragraph (m) of this proposed AD. Paragraph (m) of this proposed AD is intended to give credit for actions accomplished using previous revisions of service information for accomplishing corresponding actions prior to the effective date of the AD; it does not terminate any actions and does not address future actions.

Request To Provide Credit for Certain Repairs

Boeing asked that we change paragraph (m) of the proposed AD (in the NPRM) to provide credit for repairs that were accomplished before the effective date of the AD, in accordance with Boeing Alert Service Bulletin 737–53A1261, dated January 19, 2006. Boeing stated that the repair procedures are the same as those in Boeing Alert Service Bulletin 737–53A1261, Revision 1, dated January 30, 2015 (as specified in paragraph (l)(2) of the proposed AD (in the NPRM)).

We agree with the commenter for the reason provided. We have added a new paragraph (m)(3) to this proposed AD to give credit for repairs specified in paragraph (l)(2) of the this proposed AD that are accomplished before the effective date of this proposed AD.

Request To Remove Repairs as Terminating Action Under Certain Conditions

Boeing asked that we change paragraph (l)(4) of the proposed AD (in the NPRM) to remove repairs as acceptable terminating action. Boeing stated that paragraph (l)(4) of the proposed AD (in the NPRM) would provide a terminating action provision for the repetitive inspections required by paragraph (g)(2) of the proposed AD (in the NPRM) if a repair or preventive modification is accomplished that is different from the one provided in Boeing Alert Service Bulletin 737–53A1261, Revision 1, dated January 30, 2015, provided it has been approved by the Manager, Los Angeles Aircraft Certification Office. Boeing added that there have been repairs performed in the past that involve trimming the production upper frame web near S–11 and replacing it with an identical replacement frame web without additional reinforcement similar to the preventive modification or repair. Boeing noted that the repair is structurally acceptable; however, it does not sufficiently reinforce the frame to provide terminating action for the inspections, and would require further service actions, including inspections and a preventive modification. Boeing added that the additional inspection requirements should be specified in the AMOC approval, and noted that a preventive modification would not necessarily be required since prior approvals would not have taken the WFD requirements into account.

We agree with the commenter for the reasons provided. All previously installed repairs or modifications installed in accordance with Boeing Alert Service Bulletin 737–53A1261, dated January 19, 2006, must be reevaluated or replaced to ensure that all WFD requirements are met. Therefore, we have removed paragraph (l)(4) of the proposed AD (in the NPRM) from this proposed AD.

FAA's Determination

We are proposing this SNPRM because we evaluated all the relevant information and determined the unsafe condition described previously is likely to exist or develop in other products of the same type design. Certain changes described above expand the scope of the NPRM. As a result, we have determined that it is necessary to reopen the comment period to provide additional opportunity for the public to comment on this SNPRM.

Proposed Requirements of This SNPRM

This SNPRM would require accomplishing the actions specified in the service information described previously, except as discussed under ''Difference Between this AD and the Service Information.'' Refer to this service information for information on the procedures and compliance times.

Difference Between This SNPRM and the Service Information

Boeing Alert Service Bulletin 737–53A1261, Revision 1, dated January 30, 2015, specifies to contact the manufacturer for certain repair instructions, but this proposed AD would require repair methods, modification deviations, and alteration deviations in one of the following ways:

- In accordance with a method that we approve; or
- Using data that meet the certification basis of the airplane, and that have been approved by the Boeing Commercial Airplanes Organization Designation Authorization (ODA) whom we have authorized to make those findings.

Costs of Compliance

We estimate that this proposed AD affects 391 airplanes of U.S. registry.

We estimate the following costs to comply with this proposed AD:

ESTIMATED COSTS

Action	Labor cost	Parts cost	Cost per product	Cost on U.S. operators
Retained inspections from AD 2008–13–12 R1.	Between 18 and 38 work-hours × $85 per hour, depending on airplane configuration = between $1,530 and $3,230 per inspection cycle.	$0	Between $1,530 and $3,230 per inspection cycle.	Between $598,230 and $1,262,930, per inspection cycle.
New proposed inspections.	213 work-hours × $85 per hour, $18,105 per inspection cycle	$0	$18,105 per inspection cycle.	$7,079,055, per inspection cycle.
New proposed modification.	256 work-hours × $85 per hour = $21,760	([1])	$21,760	$8,508,160

[1] We currently have no specific cost estimates associated with the parts necessary for the proposed modification.

We have received no definitive data that would enable us to provide a cost estimate for the on-condition actions specified in this proposed AD.

Authority for This Rulemaking

Title 49 of the United States Code specifies the FAA's authority to issue rules on aviation safety. Subtitle I, section 106, describes the authority of the FAA Administrator. ''Subtitle VII: Aviation Programs'' describes in more detail the scope of the Agency's authority.

We are issuing this rulemaking under the authority described in Subtitle VII, Part A, Subpart III, Section 44701: ''General requirements.'' Under that section, Congress charges the FAA with promoting safe flight of civil aircraft in air commerce by prescribing regulations for practices, methods, and procedures the Administrator finds necessary for safety in air commerce. This regulation is within the scope of that authority because it addresses an unsafe condition that is likely to exist or develop on products identified in this rulemaking action.

Regulatory Findings

We determined that this proposed AD would not have federalism implications under Executive Order 13132. This proposed AD would not have a substantial direct effect on the States, on the relationship between the national Government and the States, or on the distribution of power and responsibilities among the various levels of government.

For the reasons discussed above, I certify this proposed regulation:

(1) Is not a ''significant regulatory action'' under Executive Order 12866,

(2) Is not a ''significant rule'' under the DOT Regulatory Policies and Procedures (44 FR 11034, February 26, 1979),

(3) Will not affect intrastate aviation in Alaska, and

(4) Will not have a significant economic impact, positive or negative, on a substantial number of small entities under the criteria of the Regulatory Flexibility Act.

List of Subjects in 14 CFR Part 39

Air transportation, Aircraft, Aviation safety, Incorporation by reference, Safety.

The Proposed Amendment

Accordingly, under the authority delegated to me by the Administrator, the FAA proposes to amend 14 CFR part 39 as follows:

PART 39—AIRWORTHINESS DIRECTIVES

■ 1. The authority citation for part 39 continues to read as follows:

Authority: 49 U.S.C. 106(g), 40113, 44701.

§ 39.13 [Amended]

■ 2. The FAA amends § 39.13 by removing Airworthiness Directive (AD) 2008–13–12 R1, Amendment 39–15719 (73 FR 67383, November 14, 2008), and adding the following new AD.

The Boeing Company: Docket No. FAA–2015–3984; Directorate Identifier 2015–NM–033–AD.

(a) Comments Due Date

We must receive comments by December 29, 2016.

(b) Affected ADs

This AD replaces AD 2008–13–12 R1, Amendment 39–15719 (73 FR 67383, November 14, 2008) (''AD 2008–13–12 R1'').

(c) Applicability

(1) This AD applies to The Boeing Company Model 737–100, –200, –200C, –300, –400, and –500 series airplanes, certificated in any category, as identified in Boeing Alert Service Bulletin 737–53A1261, Revision 1, dated January 30, 2015.

(2) Installation of Supplemental Type Certificate (STC) ST01219SE *(http://rgl.faa.gov/Regulatory_and_Guidance_Library/rgstc.nsf/0/BE866B732F6CF31086257B9700692796?OpenDocument&Highlight=st01219se)* does not affect the ability to accomplish the actions required by this AD. Therefore, for airplanes on which STC ST01219SE is installed, a ''change in product'' alternative method of compliance (AMOC) approval request is not necessary to comply with the requirements of 14 CFR 39.17.

(d) Subject

Air Transport Association (ATA) of America Code 53, Fuselage.

(e) Unsafe Condition

This AD was prompted by reports of additional fatigue cracking of the upper-frame-to-side-frame splice of the fuselage, and one report of a severed frame due to susceptibility to widespread fatigue damage (WFD). We are issuing this AD to detect and correct fatigue cracking of the upper-frame-to-side-frame splice of the fuselage, which could result in reduced structural integrity of the frame and adjacent lap joint, causing increased loading in the fuselage skin, which will accelerate skin crack growth and result in decompression of the airplane.

(f) Compliance

Comply with this AD within the compliance times specified, unless already done.

(g) Repetitive Inspections and Corrective Actions for Certain Airplanes

(1) For Groups 1 through 3, Configurations 1, 3, 4, and 5 airplanes; Group 7, Configurations 1, 3, 4, and 5 airplanes; Groups 4 through 6, Configurations 1, 3, 4, and 6 airplanes; and Groups 8 through 11, Configurations 1, 3, 4, and 6 airplanes; as identified in Boeing Alert Service Bulletin 737–53A1261, Revision 1, dated January 30, 2015: Do the actions specified in paragraphs (g)(1)(i) and (g)(1)(ii) of this AD, and all applicable corrective actions, in accordance with the Accomplishment Instructions of Boeing Alert Service Bulletin 737–53A1261, Revision 1, dated January 30, 2015, except as required by paragraph (i)(3) of this AD. Do all applicable corrective actions before further flight.

(i) At the applicable time specified in Tables 1, 2, 3, 5, 6, and 8 of paragraph 1.E., ''Compliance,'' of Boeing Alert Service Bulletin 737–53A1261, Revision 1, dated January 30, 2015, except as required by paragraphs (i)(1) and (i)(2) of this AD: Do medium frequency eddy current inspections for cracking of the upper-frame-to-side-frame splice of the fuselage.

(ii) Repeat the inspections specified in paragraph (g)(1)(i) of this AD at the applicable time specified in Tables 1, 2, 3, 5, 6, and 8 of paragraph 1.E., ''Compliance,'' of

Boeing Alert Service Bulletin 737–53A1261, Revision 1, dated January 30, 2015, until the preventive modification required by paragraph (k) of this AD, or a terminating action specified in paragraph (l) of this AD, has been accomplished. The inspections are terminated for the repaired or modified areas only.

(2) For Groups 4 through 6, Configurations 2 and 5 airplanes; and Groups 8 through 11, Configurations 2 and 5 airplanes; as identified in Boeing Alert Service Bulletin 737–53A1261, Revision 1, dated January 30, 2015: Do the actions specified in paragraphs (g)(2)(i) and (g)(2)(ii) of this AD, and all applicable corrective actions, in accordance with the Accomplishment Instructions of Boeing Alert Service Bulletin 737–53A1261, Revision 1, dated January 30, 2015, except as required by paragraph (i)(3) of this AD. Do all applicable corrective actions before further flight.

(i) At the applicable time specified in Tables 4 and 7 of paragraph 1.E., ''Compliance,'' of Boeing Alert Service Bulletin 737–53A1261, Revision 1, dated January 30, 2015, except as required by paragraphs (i)(1) and (i)(2) of this AD: Do a detailed inspection to determine if the existing frame repair meets all requirements specified in Boeing Alert Service Bulletin 737–53A1261, Revision 1, dated January 30, 2015, and for any frame repair that does meet all requirements, do detailed and high frequency eddy current (HFEC) inspections for cracking of the existing frame repairs.

(ii) Repeat the inspections for cracking specified in paragraph (g)(2)(i) of this AD at the applicable time specified in Tables 4 and 7 of paragraph 1.E., ''Compliance,'' of Boeing Alert Service Bulletin 737–53A1261, Revision 1, dated January 30, 2015.

(h) Post-Repair and Post-Modification Actions for Certain Airplanes

For Group 1, Configurations 2 and 6 airplanes; Group 2, Configurations 2 and 6 airplanes; Group 3, Configurations 2 and 6 airplanes; and Group 7, Configurations 2 and 6 airplanes; as identified in Boeing Alert Service Bulletin 737–53A1261, Revision 1, dated January 30, 2015: Within 120 days after the effective date of this AD, do post-repair and post-modification actions using a method approved in accordance with the procedures specified in paragraph (n) of this AD.

(i) Exceptions to Service Bulletin Specifications

(1) Where Boeing Alert Service Bulletin 737–53A1261, Revision 1, dated January 30, 2015, specifies a compliance time ''after the Revision 1 date of this service bulletin,'' this AD requires compliance within the specified compliance time after the effective date of this AD.

(2) Where the ''Condition'' column of paragraph 1.E., ''Compliance,'' of Boeing Alert Service Bulletin 737–53A1261, Revision 1, dated January 30, 2015, specifies a condition based on whether an airplane has or has not been inspected, this AD bases the condition on whether an airplane has or has not been inspected as of the effective date of this AD.

(3) Where Boeing Alert Service Bulletin 737–53A1261, Revision 1, dated January 30, 2015, specifies to contact Boeing for repair instructions: Before further flight, repair using a method approved in accordance with the procedures specified in paragraph (n) of this AD.

(j) Post-Repair/Post-Modification Inspections

For Groups 4 through 6, Configurations 1, 3, 4, 6, 7, 8, 9, and 10 airplanes; and Groups 8 through 11, Configurations 1, 3, 4, 6, 7, 8, 9, and 10 airplanes; as identified in Boeing Alert Service Bulletin 737–53A1261, Revision 1, dated January 30, 2015: Except as provided by paragraphs (i)(1) and (i)(2) of this AD, at the applicable time specified in Tables 12 through 17 of paragraph 1.E., ''Compliance,'' of Boeing Alert Service Bulletin 737–53A1261, Revision 1, dated January 30, 2015; do the post-repair/post-modification inspections, in accordance with the Accomplishment Instructions of Boeing Alert Service Bulletin 737–53A1261, Revision 1, dated January 30, 2015, except as required by paragraph (i)(3) of this AD. Do all applicable corrective actions before further flight.

(k) Preventive Modification for Certain Airplanes

For Groups 4 through 6, Configurations 1, 3, 4, and 6 airplanes; and Groups 8 through 11, Configurations 1, 3, 4, and 6 airplanes; as identified in Boeing Alert Service Bulletin 737–53A1261, Revision 1, dated January 30, 2015: Except as provided by paragraphs (i)(1) and (i)(2) of this AD, at the applicable time specified in Tables 3, 5, 6, and 8 in paragraph 1.E., ''Compliance,'' of Boeing Alert Service Bulletin 737–53A1261, Revision 1, dated January 30, 2015, do the preventive modification, including HFEC inspections for cracking and applicable corrective actions, in accordance with Part 4 of the Accomplishment Instructions of Boeing Alert Service Bulletin 737–53A1261, Revision 1, dated January 30, 2015, except as required by paragraph (i)(3) of this AD. Do all applicable corrective actions before further flight. Accomplishing the modification required by this paragraph terminates the inspections required by paragraph (g)(1) of this AD for the modified area only.

(l) Terminating Action

(1) For Groups 4 through 6, Configurations 1, 3, 4, and 6 airplanes; and Groups 8 through 11, Configurations 1, 3, 4, and 6 airplanes; as identified in Boeing Alert Service Bulletin 737–53A1261, Revision 1, dated January 30, 2015: Accomplishing the preventive modification, including HFEC inspections for cracking and applicable corrective actions, in accordance with Part 4 of the Accomplishment Instructions of Boeing Alert Service Bulletin 737–53A1261, Revision 1, dated January 30, 2015, except as required by paragraph (i)(3) of this AD, terminates the inspections required by paragraph (g)(1) of this AD for the modified area only.

(2) For Groups 4 through 6, Configurations 3 and 6 airplanes; and Groups 8 through 11, Configurations 3 and 6 airplanes; as identified in Boeing Alert Service Bulletin 737–53A1261, Revision 1, dated January 30, 2015: Accomplishing the repair, including HFEC inspections for cracking and applicable corrective actions, in accordance with Part 3 of the Accomplishment Instructions of Boeing Alert Service Bulletin 737–53A1261, Revision 1, dated January 30, 2015, except as required by paragraph (i)(3) of this AD, terminates the repetitive inspections required by paragraph (g)(1) of this AD, and the preventive modification required by paragraph (k) of this AD, for the repaired area only.

(3) Accomplishment of the repair or the preventive modification specified in Boeing Message M–7200–02–1294, dated August 20, 2002, before the effective date of this AD terminates the repetitive inspections required by paragraph (g)(1) of this AD and the preventive modification required by paragraph (k) of this AD for the repaired or modified area only.

(m) Credit for Previous Actions

(1) This paragraph provides credit for the inspections required by paragraph (g) of this AD, if those inspections were performed before the effective date of this AD using Boeing Alert Service Bulletin 737–53A1261, dated January 19, 2006, which was incorporated by reference in AD 2008–13–12, Amendment 39–15575 (73 FR 38905, July 8, 2008) (''AD 2008–13–12'').

(2) This paragraph provides credit for the modification specified in paragraphs (k) and (l)(1) of this AD, if performed before the effective date of this AD using Boeing Alert Service Bulletin 737–53A1261, dated January 19, 2006.

(3) This paragraph provides credit for repairs specified in paragraphs (l)(2) of this AD, if performed before the effective date of this AD using Boeing Alert Service Bulletin 737–53A1261, dated January 19, 2006.

(n) Alternative Methods of Compliance (AMOCs)

(1) The Manager, Los Angeles ACO, FAA, has the authority to approve AMOCs for this AD, if requested using the procedures found in 14 CFR 39.19. In accordance with 14 CFR 39.19, send your request to your principal inspector or local Flight Standards District Office, as appropriate. If sending information directly to the manager of the ACO, send it to the attention of the person identified in paragraph (o)(1) of this AD. Information may be emailed to: *9-ANM-LAACO-AMOC-Requests@faa.gov.*

(2) Before using any approved AMOC, notify your appropriate principal inspector, or lacking a principal inspector, the manager of the local flight standards district office/certificate holding district office.

(3) An AMOC that provides an acceptable level of safety may be used for any repair required by this AD if it is approved by the Boeing Commercial Airplanes Organization Designation Authorization (ODA) that has been authorized by the Manager, Los Angeles ACO, to make those findings. For a repair method to be approved, the repair must meet the certification basis of the airplane, and the approval must specifically refer to this AD.

(4) AMOCs approved for AD 2008–13–12, and AD 2008–13–12 R1; are approved as AMOCs for the corresponding provisions of paragraph (g) of this AD.

(o) Related Information

(1) For more information about this AD, contact Wayne Lockett, Aerospace Engineer, Airframe Branch, ANM–120S, FAA, Seattle ACO, 1601 Lind Avenue SW., Renton, WA 98057–3356; phone: 425–917–6447; fax: 425–917–6590; email: *wayne.lockett@faa.gov.*

(2) For service information identified in this AD, contact Boeing Commercial Airplanes, Attention: Data & Services Management, P.O. Box 3707, MC 2H–65, Seattle, WA 98124–2207; telephone 206–544–5000, extension 1; fax 206–766–5680; Internet *https://www.myboeingfleet.com.* You may view this referenced service information at the FAA, Transport Airplane Directorate, 1601 Lind Avenue SW., Renton, Washington. For information on the availability of this material at the FAA, call 425–227–1221.

Issued in Renton, Washington, on September 12, 2016.

Michael Kaszycki,

Acting Manager, Transport Airplane Directorate, Aircraft Certification Service.

[FR Doc. 2016–22699 Filed 11–10–16; 8:45 am]

BILLING CODE 4910–13–P

DEPARTMENT OF HEALTH AND HUMAN SERVICES

Food and Drug Administration

21 CFR Chapter 1

[Docket No. FDA–2008–N–0622]

Withdrawal of Two Proposed Rules

AGENCY: Food and Drug Administration, HHS.

ACTION: Notice of withdrawal.

SUMMARY: The Food and Drug Administration (FDA) is announcing the withdrawal of two proposed rules that published in the **Federal Register** more than 5 years ago. These proposed rules are no longer considered viable candidates for final action. FDA is taking this action because these proposed rules are out of date.

DATES: The proposed rules are withdrawn on November 14, 2016.

FOR FURTHER INFORMATION CONTACT: Lisa M. Helmanis, Regulations Policy and Management Staff, Office of the Commissioner, Food and Drug Administration, 10903 New Hampshire Ave., Bldg. 32, Rm. 3326, Silver Spring, MD 20993–0002, 301–796–9135, email: *Lisa.Helmanis.@fda.hhs.gov.*

SUPPLEMENTARY INFORMATION:

I. Background

In 1990, FDA began a process of periodically conducting comprehensive reviews of its regulation process, including reviewing the backlog of notices of proposed rulemakings that were never finalized. As FDA removed many proposed rules that had not been finalized, the Agency was able to clean out the backlog and implement a process of reviewing these proposed rules every 5 years. In the **Federal Register** of December 12, 2008 (73 FR 75625), FDA withdrew four proposed rules that were more than 5 years old that it did not intend to finalize.

Recently, FDA has conducted a review of proposed rules that are more than 5 years old, and is announcing the withdrawal the following two proposed rules:

	Title of proposed rule	Publication date and Docket No.	Reason for withdrawal
1	Availability for Public Disclosure and Submission to FDA for Public Disclosure of Certain Data and Information Related to Human Gene Therapy or Xenotransplantation.	1/18/2001, 00N–0989	FDA has reconsidered our position on this issue and deemed our concerns from 2001 outdated. We will continue to assess whether rulemaking in this area is necessary, and if so, we will proceed with a new proposed rule.
2	Crabmeat; Amendment of Common or Usual Name Regulation.	4/23/1998, 94P–0043	This proposed rule is obsolete because FDA has created a new process that allows for routine updates to the seafood names without going through notice and comment rulemaking. See FDA's Guide to Acceptable Market Names for Seafood Sold in Interstate Commerce.

The withdrawal of these proposals identified in this document does not preclude the Agency from reinstituting rulemaking concerning the issues addressed in the proposals listed in the chart. Should we decide to undertake such rulemakings in the future, we will re-propose the actions and provide new opportunities for comment. Furthermore, this notice is only intended to address the specific actions identified in this document, and not any other pending proposals that the Agency has issued or is considering. The Agency notes that withdrawal of a proposal does not necessarily mean that the preamble statement of the proposal no longer reflects the current position of FDA on the matter addressed. You may wish to review the Agency's Web site (*http://www.fda.gov*) for any current guidance on the matter.

Dated: November 8, 2016.

Leslie Kux,

Associate Commissioner for Policy.

[FR Doc. 2016–27329 Filed 11–10–16; 8:45 am]

BILLING CODE 4164–01–P

NATIONAL MEDIATION BOARD

29 CFR Part 1208

[Docket No. C–7156]

RIN 3140–AA00

Access to Information

AGENCY: National Mediation Board.

ACTION: Proposed rule with request for comments; notice of hearing.

SUMMARY: The National Mediation Board (NMB or Board) proposes to revise its Freedom of Information Act (FOIA) regulations in order to implement the FOIA Improvement Act of 2016 and to amend its regulations regarding responding to subpoenas. The NMB also proposes to update these regulations where needed in accordance with Department of Justice guidance, Executive Order 12,600, and changes in Agency practice and procedure.

DATES: Submit comments on or before January 13, 2017. The NMB will hold a public hearing on Thursday, December 8, 2016. Submit requests to speak at the hearing until 4 p.m. EST on Thursday, December 1, 2016.

ADDRESSES: You may submit comments by any of the methods listed below. Please submit requests to speak and materials for the public hearing only to the NMB's physical or email address. Clearly identify all submissions by Docket Number C–7156.

- *Federal eRulemaking Portal: http://www.regulations.gov.* Follow the instructions for submitting comments.

- *Agency Web site: www.nmb.gov.* Follow the instructions for submitting comments.
- *Email: legal@nmb.gov.* Include docket number in the subject line of the message.
- *Fax:* (202) 692–5085.
- *Mail and Hand Delivery:* National Mediation Board, 1301 K Street NW., Suite 250E, Washington, DC, 20005.

See **SUPPLEMENTARY INFORMATION** for other information about electronic submission.

FOR FURTHER INFORMATION CONTACT: Mary Johnson, General Counsel, National Mediation Board, 202–692–5050, *legal@nmb.gov.*

SUPPLEMENTARY INFORMATION:

I. Introduction
II. Section-by-Section Analysis
III. Public Hearing Under Railway Labor Act
IV. Procedural Requirements

I. Introduction

The NMB proposes revisions to all seven sections of part 1208 entitled ''Availability of Information.'' Most of these revisions implement the FOIA Improvement Act of 2016 (Pub. L. 114–185). In addition, section 1208.7 proposes ''Touhy'' regulations to address the NMB's response to subpoenas and other formal requests for information. Other proposed changes reflect current NMB practice and procedures. In drafting proposed changes, the NMB consulted Guidance for Agency FOIA Regulations issued by the Department of Justice's Office for Information Policy (OIP).

The Board invites commenters to address any matters they consider relevant to the changes in the regulations. The NMB may incorporate any comments in a Final Rule. All submissions must include the agency name and docket number. All comments received will be posted without change to *www.nmb.gov,* including any personal information provided. For access to the docket or to read background documents or comments received, go to *www.nmb.gov.*

II. Section-by-Section Analysis

1208.1 General Provisions

Current sections 1208.1 ''Purpose'' and 1208.3 ''General Policy'' have been combined into this proposed section. Proposed section 1208.1(c) includes the requirement in the FOIA Improvement Act of 2016 that an agency must release information unless it ''reasonably foresees that disclosure would harm an interest protected by an exemption.'' Proposed section 1208.1(d) has been added to specify that the NMB will preserve all correspondence related to FOIA requests until destruction or other disposition is authorized pursuant to Title 44 of the United States Code or under General Records Schedule 14 of the National Archives and Records Administration.

1208.2 Requests for Records or Information Under the Freedom of Information Act

Proposed section 1208.2(a) generally updates procedures for requesting documents under the FOIA, including providing updated Agency contact information. Several existing paragraphs will be renumbered to accommodate new provisions described here.

Proposed section 1208.2(a)(2) provides requesters with the option to contact the NMB's FOIA Public Liaison for assistance in formulating a request.

Proposed section 1208.2(b) generally updates procedures related to the NMB's processing of FOIA requests. The FOIA allows agencies to toll the 20-day response period one time to request information from the requester or to clarify a fee issue. 5 U.S.C. 552(a)(6)(A). This procedure has been expressly added to proposed section 1208.2(b)(1).

The FOIA Improvement Act of 2016 requires agencies to notify requesters of their right to engage in dispute resolution services from the Office of Government Information Services. Proposed section 1208.2(b)(2) requires the NMB to notify a requester of this right whenever the NMB requests an extension of longer than 10 days to respond to a request. Proposed section 1208.2(b)(6)(iii) includes the requirement that the NMB notify the requester of this right whenever a FOIA request is not granted in full.

Proposed section 1208.2(b)(4) includes procedures that the NMB follows when it receives a request for records that originated at another agency or contain information of interest to another agency, in accordance with prior guidance from the OIP. The NMB currently follows these procedures, but they are not included in current regulations.

Proposed section 1208.2(b)(5) relates to requests for confidential business information provided to the NMB that may be protected from disclosure under Exemption 4 of the FOIA, 5 U.S.C. 552(b)(4). Executive Order 12,600 requires agencies to notify submitters of confidential business information when such information is the subject of a FOIA request. Proposed sections 1208.2(b)(5)(i) through (ii) describe the procedure for notifying submitters of the request and allowing an opportunity to object to disclosure. Proposed section 1208.2(b)(5)(iv) requires submitters of confidential business information to use a good faith effort to designate information they consider protected by Exemption 4.

Proposed section 1208.2(c) extends the time to appeal from 30 days to 90 days when a request for records has been denied in whole or part. This change is required by the FOIA Improvement Act of 2016.

1208.3 Proactive Disclosure of Information

The NMB proposes to replace current section 1208.3 with provisions related to the proactive disclosure of information as required by the FOIA Improvement Act of 2016. Among the provisions related to proactive disclosure is the ''rule of three'' requirement. This proposed section requires the NMB to post on its Web site any materials released in response to a FOIA request and for which the NMB has received at least three requests or which the NMB determines are likely to become the subject of subsequent requests.

1208.4 Material Relating to Representation Function

Proposed section 1208.4(b) discusses which materials related to the NMB's representation function are generally available and which remain confidential and not available for release. Proposed section 1208.4(b) clarifies that evidence submitted in connection with the showing of interest in a representation dispute will be treated as confidential.

1208.5 Material Relating to Mediation Function

Proposed section 1208.5 describes which material related to the NMB's mediation function is confidential, clarifying and updating language in the current section 1208.5.

1208.6 Fees Under the Freedom of Information Act

Proposed section 1208.6 has been redrafted based on Guidance for Agency FOIA Regulations issued by the OIP. Most provisions remain the same while the language has been streamlined and updated.

Proposed section 1208.6(d)(2) would prohibit the NMB from charging fees when it has failed to comply with the FOIA's time limits for responding to requests, except in limited circumstances. This change is required by the FOIA Improvement Act of 2016.

1208.7 Subpoenas and Other Requests for Testimony and Production of Documents in Legal Proceedings Where the NMB Is Not a Party

The NMB has on occasion received formal demands or subpoenas to produce records, information, or testimony in judicial, legislative, or administrative proceedings in which it or the United States is not a party. Many federal agencies have issued regulations to address these requests and provide a process for evaluating and responding to such requests. The United States Supreme Court has upheld this type of regulation in *United States ex rel. Touhy* v. *Ragen,* 340 U.S. 462 (1951). The NMB has never before issued a regulation governing the submission, evaluation, and processing of subpoenas and other similar demands for information. Proposed section 1208.7 would replace current rule 1208.7 addressing compliance with subpoenas. This proposed rule would prohibit NMB employees from producing records, information, or testimony in response to demands, unless those demands are submitted in accordance with the provisions in proposed section 1208.7(a) and release has been authorized by the NMB's General Counsel. Proposed section 1208.7(c) describes the factors the General Counsel will consider in determining whether to release information.

III. Public Hearing

Pursuant to provisions in the Railway Labor Act, the NMB will hold an open public hearing on Thursday, December 8, 2016 from 10 a.m. until 12 p.m. The public hearing will be held in the Agency's offices at 1301 K Street NW., Suite 250E, Washington, DC, 20005. The purpose of the hearing will be to solicit views of interested persons concerning the proposed rule changes.

Individuals desiring to attend the meeting must notify the NMB at the above listed physical or email address by the deadline posted. If the individual desires to make a presentation to the Board at the meeting, he or she is required to submit a brief outline of the presentation when making the request. In addition, a full written statement must be submitted no later than 4 p.m. on Monday, December 5, 2016. In lieu of making an oral presentation, individuals may submit a written statement for the record. To attend the meeting, all potential attendees must include in their request: (1) Their full name and (2) organizational affiliation (if any). Attendees are reminded to bring a photo identification card with them to the public meeting in order to gain admittance to the building.

IV. Procedural Requirements

Paperwork Reduction Act

This rule does not contain information collection requirements that require approval by the Office of Management and Budget under the Paperwork Reduction Act (44 U.S.C. 3507 *et seq.*).

Regulatory Flexibility Act

The NMB certifies that this rule will not have a significant impact on a substantial number of small entities under the Regulatory Flexibility Act (5 U.S.C. 601 *et seq.*). The proposed rule imposes no requirements upon carriers or derivative carriers subject to the RLA. The proposed rule would not directly affect any entities that are small businesses under the Regulatory Flexibility Act. Accordingly, the National Mediation Board certifies that it will not have a significant impact on a substantial number of small entities.

National Environmental Policy Act

This proposal will not have any significant impact on the quality of the human environment under the National Environmental Policy Act (42 U.S.C. 4321 *et seq.*).

List of Subjects in 29 CFR Part 1208

Information, Confidential business information, Freedom of information.

For the reasons stated in the preamble, the National Mediation Board proposes to revise 29 CFR part 1208 to read as follows:

PART 1208—AVAILABILITY OF INFORMATION

Sec.
1208.1 General provisions.
1208.2 Requests for records or information under the Freedom of Information Act.
1208.3 Proactive disclosure of information.
1208.4 Material relating to representation function.
1208.5 Material relating to mediation function.
1208.6 Fees under the Freedom of Information Act.
1208.7 Subpoenas and other requests for testimony and production of documents in legal proceedings where the NMB is not a party.

Authority: 44 Stat. 577, as amended; 45 U.S.C. 151–163.

§ 1208.1 General provisions.

(a) The purpose of this part is to set forth the regulations of the NMB regarding the availability and disclosure of information in its possession and to implement the Freedom of Information Act (FOIA). These regulations establish procedures for requesting access to records maintained by the NMB and should be read together with the FOIA, the 1987 Office of Management and Budget Guidelines for FOIA Fees, Executive Order 12,600, and the NMB's other rules and regulations.

(b) Public policy and the successful effectuation of the NMB's mission require that Board members and the employees of the NMB maintain a reputation for impartiality and integrity. Labor and management and other interested parties participating in mediation efforts must have assurance, as must labor organizations, carriers, and individuals involved in questions of representation, that confidential information disclosed to Board members and employees of the NMB will not be divulged, voluntarily or by compulsion.

(c) Notwithstanding this general policy, the Board will under all circumstances endeavor to make public as much information as can be allowed. The Board will withhold information under the FOIA only if it reasonably foresees that disclosure would harm an interest protected by one of the exemptions described in the FOIA or when disclosure is prohibited by law. When full disclosure is not possible, the NMB will consider whether partial disclosure of information is possible and will take necessary steps to segregate and release nonexempt information.

(d) The NMB will preserve all correspondence pertaining to requests it receives under the FOIA, as well as copies of all requested records, until disposition or destruction is authorized pursuant to Title 44 of the United States Code or the General Records Schedule 14 of the National Archives and Records Administration. The NMB will not dispose of or destroy records while they are the subject of a pending request, appeal, or lawsuit under the FOIA.

§ 1208.2 Requests for records or information under the Freedom of Information Act.

(a) *Requests for records.* (1) All requests for NMB records shall be filed in writing by emailing *FOIA@nmb.gov* or mailing the request to the Chief FOIA Officer, National Mediation Board, 1301 K Street NW., Suite 250E, Washington, DC, 20005. Additional information about submitting requests is available at *www.nmb.gov.* Requesters must provide contact information, such as their phone number, email address, and/or mailing address, to assist in communications about the request.

(2) The request shall reasonably describe the records being sought in a

manner which permits identification and location of the records. To the extent possible, requesters should include specific information that may help the NMB identify the requested records, such as the date, title or name, author, recipient, subject matter, case or file number, or reference number. Before submitting a request, a requester may contact the NMB's FOIA Public Liaison to discuss the records sought or to receive assistance in describing the records.

(3) The request shall include any request for waiver of fees, clearly outlining the reasons for any such request.

(4) Requests may specify the preferred form or format (including electronic formats) for the records sought. The NMB will accommodate such requests if the record is readily reproducible in that form or format.

(5) Upon receipt of a request for the records, the Chief FOIA Officer shall assign the request a FOIA tracking number and record the date and time received, the name and address of the requester, and the nature of the records requested. If the request will take more than 10 working days to process, the Chief FOIA Officer will acknowledge the request in writing, providing the requester with an individualized tracking number and a brief description of records sought.

(6) All time limitations established pursuant to this section with respect to processing initial requests and appeals shall commence at the time a written request for records is received at the Board's offices in Washington, DC or via email.

(b) *Processing the request.* (1) *Time limits.* Within 20 working days after a request for records is received, the Chief FOIA Officer shall determine whether to comply with the request and immediately notify the requester, unless an extension is taken under paragraph (b)(2) of this section. The NMB may make one request for additional information from the requester or clarify a fee issue with the requester and may toll the 20-day period while awaiting receipt of the additional information.

(2) *Extension of time.* In unusual circumstances as specified in this paragraph, the Chief FOIA Officer may extend the time for initial determination on requests up to a total of 10 days (excluding Saturdays, Sundays, and legal public holidays). Extensions shall be made by written notice to the requester within 20 working days of receipt of the request and shall set forth the reason for the extension, provide the date on which a determination is expected to be dispatched, and make available the NMB's Public Liaison to assist with any disputes between the requester and the NMB. Where the extension exceeds 10 working days, the Chief FOIA Officer will notify the requester of the right to seek dispute resolution services from the Office of Government Information Services. As used in this paragraph ''unusual circumstances'' means, but only to the extent necessary to the proper processing of the request:

(i) The need to search for, collect, and appropriately examine a voluminous amount of separate and distinct records which are demanded in a single request; or

(ii) The need for consultation, according to the procedures set forth in paragraph (b)(4), with another agency having substantial interest in the determination of the request.

(3) *Expedited processing.* The Chief FOIA Officer shall process a request on an expedited basis whenever a requester demonstrates a compelling need. A request for expedited processing may be made at any time.

(i) For purposes of this section, ''compelling need'' means that a failure to obtain the requested records on an expedited basis could reasonably be expected to pose an imminent threat to the life or physical safety of an individual or, with respect to a request made by a person primarily engaged in disseminating information, urgency to inform the public concerning actual or alleged Federal Government activity.

(ii) The Chief FOIA Officer shall make a determination of whether to provide expedited processing, and notice of the determination shall be provided to the person making the request, within 10 days after the date of the request.

(4) *Consultations and referrals.*

(i) When the NMB receives a request for a record (or a portion thereof) in its possession that originated with another federal agency, the Chief FOIA Officer shall refer the request and record to that agency for direct response to the requester. The Chief FOIA Officer will notify the requester of any referral and provide the requester with the name and FOIA contact information of the agency to which the request was referred.

(ii) In instances where a record is requested that originated with the NMB and another federal agency has a significant interest in the record (or a portion thereof), the NMB shall consult with that federal agency before responding to a requester.

(iii) All consultations and referrals received by the NMB will receive a tracking number and be processed according to the date that the first agency received the request.

(5) *Requests for business information provided to the NMB.* Business information is financial or commercial information obtained by the NMB from a submitter that may be protected from disclosure under Exemption 4 of the FOIA, 5 U.S.C. 552(b)(4).

(i) When the NMB has reason to believe that requested information may fall under Exemption 4, it will promptly provide written notice to the submitter. The notice will either describe the requested business information or include a copy of the requested records. The NMB shall provide the submitter with seven days (excepting Saturdays, Sunday, and legal public holidays) to provide a statement of any objection to disclosure.

(ii) The NMB will consider the submitter's objections in deciding whether to disclose business information. If the NMB decides to disclose business information over such objection, it shall provide written notice to the submitter of its reasons for not sustaining the objections, a description of information to be disclosed, and the disclosure date.

(iii) Whenever the NMB provides a submitter with notice and the opportunity to object under paragraph (b)(5)(ii) of this section, it shall also inform the requestor that the request is being processed according to these provisions and there may be a subsequent delay in processing.

(iv) A submitter of confidential business information must use good faith efforts to designate any portion of its submission that it considers to be protected from disclosure under Exemption 4. These designations expire 10 years after the date of the submission unless the submitter requests and provides justification for a longer designation period.

(6) *Response to requests.* Within 20 days (excepting Saturdays, Sunday, and legal public holidays) after the receipt of a request, the requester shall be notified of the determination and the right to seek assistance from the NMB's FOIA Public Liaison. If the request for records is not granted in full, the final response letter shall also include:

(i) A reference to the specific exemption or exemptions under the FOIA authorizing the withholding of the record or parts of the record and a brief explanation of how the exemption applies to the record withheld.

(ii) A statement that the denial may be appealed within 90 days by writing to the Chairman, by emailing *FOIA@nmb.gov,* or by writing to National Mediation Board, 1301 K Street NW., Suite 250E, Washington, DC 20005, and that judicial review will thereafter be

available in the district in which the requester resides, or has his principal place of business, or the district in which Agency records are situated, or the District of Columbia.

(iii) A notification of the right to seek dispute resolution services from the Office of Government Information Services.

(7) *Treatment of delay as a denial.* If no determination has been dispatched at the end of the 20-day period, or the last extension thereof, the requester may deem the request denied, and exercise a right of appeal, in accordance with paragraph (c) of this section. When no determination can be dispatched within the applicable time limit, the Chief FOIA Officer shall continue to process the request and shall inform the requester of the reason for the delay, the date on which a determination may be expected to be dispatched, and of the right to treat the delay as a denial and to appeal to the Chairman of the Board in accordance with paragraph (c) of this section.

(c) *Appeals to the Chairman of the Board.* (1) When a request for records has been denied in whole or in part by the Chief FOIA Officer or other person authorized to deny requests, the requester may, within 90 days of its receipt, appeal the denial to the Chairman of the Board. Appeals to the Chairman shall be in writing, addressed to the Chairman, National Mediation Board, Washington, DC 20005 or emailed to *FOIA@nmb.gov.*

(2) The Chairman of the Board will act upon the appeal within 20 working days (excluding Saturdays, Sundays and legal public holidays) of its receipt unless an extension is made under paragraph (c)(3) of this section.

(3) In unusual circumstances as defined in paragraph (b)(2) of this section, the time for action on an appeal may be extended up to 10 days (excluding Saturdays, Sundays and legal public holidays). Written notice of such extension shall be made prior to the expiration of the 20-day response period, setting forth the reason for the extension and the date on which a determination is expected to be dispatched.

(4) If no determination on the appeal has been dispatched at the end of the 20-day period or the last extension thereof, the requester is deemed to have exhausted administrative remedies, giving rise to a right of review in a district court of the United States, as specified in 5 U.S.C. 552(a)(4). When no determination can be dispatched within the applicable time limit, the appeal will nevertheless continue to be processed; on expiration of the time limit the requester shall be informed of the reason for the delay, of the date on which a determination may be expected to be dispatched, and of a right to seek judicial review in the United States district court in the district in which they reside or have their principal place of business, the district in which the Board records are situated or the District of Columbia. The requester may be asked to forego judicial review until determination of the appeal.

§ 1208.3 Proactive disclosure of information.

The NMB shall, in conformance with 5 U.S.C. 552(a)(2), maintain and make available for public inspection, by posting on its Web site (unless the Board determines by order published in the **Federal Register** that such publication would be unnecessary or impracticable) the following information: Final opinions, including concurring and dissenting opinions made in representation cases; statements of policy and interpretation made by the NMB but not published in the **Federal Register**; administrative staff materials, such as the Representation Manual; frequently requested materials, defined as those released in response to a FOIA request and for which the Agency has received at least three requests or those records that because of the nature of their subject matter the Agency determines are likely to become the subject of subsequent requests; and a general index of records available under this section.

§ 1208.4 Material relating to representation function.

(a) The documents constituting the record of a case, such as the notices of hearing, motions, rulings, findings upon investigation, determinations of craft or class, dismissals, withdrawals, and certifications, are matters of official record and shall be made available on the NMB's Web site.

(b) This part notwithstanding, the NMB will treat as confidential evidence submitted in connection with the showing of interest in a representation dispute, including authorization cards and signature samples, and other personally identifying information received during an investigation.

§ 1208.5 Material relating to mediation function.

All files, reports, letters, memoranda, and documents relating to the mediation function of the NMB, with the exception of procedural or administrative materials, such as applications, docket letters, or public meeting notices, in the custody of the NMB or its employees relating to or acquired in their mediatory capacity under the Railway Labor Act are hereby declared to be confidential. No such confidential documents or the material contained therein shall be disclosed to any unauthorized person, or be taken or withdrawn, copied or removed from the custody of the NMB or its employees by any person or by any agent of such person or their representative without the explicit consent of the NMB.

§ 1208.6 Fees under the Freedom of Information Act.

(a) *In general.* The NMB will charge for processing requests under the FOIA in accordance with the provisions of this section and with Office of Management and Budget Guidelines. For purposes of assessing fees, the FOIA establishes three categories of requesters: (1) Commercial use requesters, (2) non-commercial scientific or educational institutions or news media requesters, and (3) all other requesters. Different fees are assessed depending on the category. Requesters may seek a fee waiver. The NMB will consider requests for fee waivers in accordance with the requirements in paragraph (k) of this section. To resolve any fee issues that arise under this section, the NMB may contact a requester for additional information. The NMB ordinarily will collect all applicable fees before sending copies of records to a requester. Requesters must pay fees by check or money order made payable to the United States Treasury.

(b) *Definitions.* For purposes of this section:

Commercial use request is a request that asks for information for a use or a purpose that furthers a commercial, trade, or profit interest, which can include furthering those interests through litigation. An agency's decision to place a requester in the commercial use category will be made on a case-by-case basis based on the requester's intended use of the information. The NMB will notify requesters of their placement in this category.

Direct costs are those expenses that an agency incurs in searching for and duplicating (and, in the case of commercial use requests, reviewing) records in order to respond to a FOIA request. For example, direct costs include the salary of the employee performing the work (*i.e.,* the basic rate of pay for the employee, plus 16 percent of that rate to cover benefits) and the cost of operating computers and other electronic equipment, such as photocopiers and scanners. Direct costs do not include overhead expenses such

as the costs of space, and of heating or lighting a facility.

Duplication is reproducing a copy of a record, or of the information contained in it, necessary to respond to a FOIA request. Copies can take the form of paper, audiovisual materials, or electronic records, among others.

Educational institution is any school that operates a program of scholarly research. A requester in this fee category must show that the request is made in connection with his or her role at the educational institution. Agencies may seek verification from the requester that the request is in furtherance of scholarly research, and agencies will advise requesters of their placement in this category.

Noncommercial scientific institution is an institution that is not operated on a ''commercial'' basis, as defined in this paragraph (b) and that is operated solely for the purpose of conducting scientific research the results of which are not intended to promote any particular product or industry. A requester in this category must show that the request is authorized by and is made under the auspices of a qualifying institution and that the records are sought to further scientific research and are not for a commercial use. The NMB will advise requesters of their placement in this category.

Representative of the news media is any person or entity that gathers information of potential interest to a segment of the public, uses its editorial skills to turn the raw materials into a distinct work, and distributes that work to an audience. The term ''news'' means information that is about current events or that would be of current interest to the public. Examples of news media entities include television or radio stations that broadcast ''news'' to the public at large and publishers of periodicals that disseminate ''news'' and make their products available through a variety of means to the general public, including news organizations that disseminate solely on the Internet. A request for records supporting the news-dissemination function of the requester will not be considered to be for a commercial use. ''Freelance'' journalists who demonstrate a solid basis for expecting publication through a news media entity will be considered as a representative of the news media. A publishing contract would provide the clearest evidence that publication is expected; however, agencies can also consider a requester's past publication record in making this determination. The NMB will advise requesters of their placement in this category.

Review is the examination of a record located in response to a request in order to determine whether any portion of it is exempt from disclosure. Review time includes processing any record for disclosure, such as doing all that is necessary to prepare the record for disclosure, including the process of redacting the record and marking the appropriate exemptions. Review costs are properly charged even if a record ultimately is not disclosed. Review time also includes time spent both obtaining and considering any formal objection to disclosure made by a confidential business information submitter under section 1208.2(b)(5), but it does not include time spent resolving general legal or policy issues regarding the application of exemptions.

Search is the process of looking for and retrieving records or information responsive to a request. Search time includes page-by-page or line-by-line identification of information within records and the reasonable efforts expended to locate and retrieve information from electronic records.

(c) *Charging fees.* In responding to FOIA requests, the NMB will charge the following fees unless a waiver or reduction of fees has been granted under paragraph (k) of this section. Because the fee amounts provided below already account for the direct costs associated with a given fee type, the NMB will not add any additional costs to charges calculated under this section. (1) *Search.*

(i) Requests made by educational institutions, noncommercial scientific institutions, or representatives of the news media are not subject to search fees. The NMB will charge search fees for all other requesters, subject to the restrictions of paragraph (d) of this section. The NMB may properly charge for time spent searching even if it does not locate any responsive records or determines that the records are entirely exempt from disclosure.

(ii) For each quarter hour spent by personnel searching for requested records, including electronic searches that do not require new programming, direct costs will be charged.

(iii) The NMB will also charge direct costs associated with conducting any search that requires the creation of a new computer program to locate the requested records. The NMB will notify the requester of the costs associated with creating such a program, and the requester must agree to pay the associated costs before the costs may be incurred.

(2) *Duplication.* The NMB will charge duplication fees to all requesters, subject to the restrictions of paragraph (d) of this section. The NMB will honor a requester's preference for receiving a record in a particular form or format where it can readily reproduce it in the form or format requested. Where photocopies are supplied, the NMB will provide one copy per request at the cost of 15 cents per page. For copies of records produced on tapes, disks, or other media, the NMB will charge the direct costs of producing the copy, including operator time. Where paper documents must be scanned in order to comply with a requester's preference to receive the records in an electronic format, the requester must also pay the direct costs associated with scanning those materials. For other forms of duplication, the NMB will charge the direct costs.

(3) *Review.* The NMB will charge review fees to requesters who make commercial use requests. Review fees will be assessed in connection with the initial review of the record, *i.e.,* the review conducted by the NMB to determine whether an exemption applies to a particular record or portion of a record. No charge will be made for review at the administrative appeal stage of exemptions applied at the initial review stage. However, if a particular exemption is deemed to no longer apply, any costs associated with the re-review of the records in order to consider the use of other exemptions may be assessed as review fees. Review fees will be charged at the same rates as those charged for a search under paragraph (c)(1)(ii) of this section.

(d) *Restrictions on charging fees.* (1) When the NMB determines that a requester is an educational institution, non-commercial scientific institution, or representative of the news media, and the records are not sought for commercial use, it will not charge search fees.

(2)(i) If the NMB fails to comply with the time limits described in section 1208.2(b)(1) in which to respond to a request, it may not charge search fees, or, in the instances of requests from requesters described in paragraph (d)(1) of this section, may not charge duplication fees, except as described in paragraph (d)(2)(ii) through (iv) of this section.

(ii) If the NMB has determined that unusual circumstances as defined in section 1208.2(b)(2) apply and the NMB provided timely written notice to the requester in accordance with that section, a failure to comply with the time limit shall be excused for an additional 10 days.

(iii) If the NMB has determined that unusual circumstances apply and more than 5,000 pages are necessary to

respond to the request, the NMB may charge search fees, or, in the case of requesters described in paragraph (d)(1) of this section, may charge duplication fees, if the following steps are taken. The NMB must have provided timely written notice of unusual circumstances to the requester in accordance with the FOIA and must have discussed with the requester via written mail, email, or telephone (or made not less than three good-faith attempts to do so) how the requester could effectively limit the scope of the request in accordance with 5 U.S.C. 552(a)(6)(B)(ii). If this exception is satisfied, the NMB may charge all applicable fees incurred in the processing of the request.

(iv) If a court has determined that exceptional circumstances exist, as defined by the FOIA, a failure to comply with the time limits shall be excused for the length of time provided by the court order.

(3) No search or review fees will be charged for a quarter-hour period unless more than half of that period is required for search or review.

(4) Except for requesters seeking records for a commercial use, the NMB will provide without charge:

(i) The first 100 pages of duplication (or the cost equivalent for other media); and

(ii) The first two hours of search.

(5) No fee will be charged when the total fee, after deducting the 100 free pages (or its cost equivalent) and the first two hours of search, is equal to or less than $25.

(e) *Notice of anticipated fees in excess of $25.00.* (1) When the NMB determines or estimates that the fees to be assessed in accordance with this section will exceed $25.00, the Agency must notify the requester of the actual or estimated amount of the fees, including a breakdown of the fees for search, review or duplication, unless the requester has indicated a willingness to pay fees as high as those anticipated. If only a portion of the fee can be estimated readily, the NMB will advise the requester accordingly. If the request is not for noncommercial use, the notice will specify that the requester is entitled to the statutory entitlements of 100 pages of duplication at no charge and, if the requester is charged search fees, two hours of search time at no charge, and will advise the requester whether those entitlements have been provided.

(2) If the NMB notifies the requester that the actual or estimated fees are in excess of $25.00, the request will not be considered received and further work will not be completed until the requester commits in writing to pay the actual or estimated total fee, or designates some amount of fees the requester is willing to pay, or in the case of a noncommercial use requester who has not yet been provided with the requester's statutory entitlements, designates that the requester seeks only that which can be provided by the statutory entitlements. The requester must provide the commitment or designation in writing, and must, when applicable, designate an exact dollar amount the requester is willing to pay. The NMB is not required to accept payments in installments.

(3) If the requester has indicated a willingness to pay some designated amount of fees, but the NMB estimates that the total fee will exceed that amount, it will toll the processing of the request when it notifies the requester of the estimated fees in excess of the amount the requester has indicated a willingness to pay. The NMB will inquire whether the requester wishes to revise the amount of fees the requester is willing to pay or modify the request. Once the requester responds, the time to respond will resume from where it was at the date of the notification.

(4) The NMB will make available its FOIA Public Liaison or other FOIA professional to assist any requester in reformulating a request to meet the requester's needs at a lower cost.

(f) *Charges for other services.* Although not required to provide special services, if the NMB chooses to do so as a matter of administrative discretion, the direct costs of providing the service will be charged. Examples of such services include certifying that records are true copies, providing multiple copies of the same document, or sending records by means other than first class mail.

(g) *Charging interest.* The NMB may charge interest on any unpaid bill starting on the 31st day following the date of billing the requester. Interest charges will be assessed at the rate provided in 31 U.S.C. 3717 and will accrue from the billing date until payment is received by the Agency. The NMB will follow the provisions of the Debt Collection Act of 1982 (Public Law 97–365, 96 Stat. 1749), as amended, and its administrative procedures, including the use of consumer reporting agencies, collection agencies, and offset.

(h) *Aggregating requests.* When the NMB reasonably believes that a requester or a group of requesters acting in concert is attempting to divide a single request into a series of requests for the purpose of avoiding fees, it may aggregate those requests and charge accordingly. The NMB may presume that multiple requests of this type made within a 30-day period have been made in order to avoid fees. For requests separated by a longer period, the NMB will aggregate them only where there is a reasonable basis for determining that aggregation is warranted in view of all the circumstances involved. Multiple requests involving unrelated matters cannot be aggregated.

(i) *Advance payments.* (1) For requests other than those described in paragraphs (i)(2) or (i)(3) of this section, the NMB will not require the requester to make an advance payment before work is commenced or continued on a request. Payment owed for work already completed (*i.e.,* payment before copies are sent to a requester) is not an advance payment.

(2) When the NMB determines or estimates that a total fee to be charged under this section will exceed $250.00, it may require that the requester make an advance payment up to the amount of the entire anticipated fee before beginning to process the request. The NMB may elect to process the request prior to collecting fees when it receives a satisfactory assurance of full payment from a requester with a history of prompt payment.

(3) Where a requester has previously failed to pay a properly charged FOIA fee within 30 calendar days of the billing date, the NMB may require that the requester pay the full amount due, plus any applicable interest on that prior request, and it may require that the requester make an advance payment of the full amount of any anticipated fee before beginning to process a new request or continuing to process a pending request or any pending appeal. Where the NMB has a reasonable basis to believe that a requester has misrepresented the requester's identity in order to avoid paying outstanding fees, it may require that the requester provide proof of identity.

(4) In cases in which the NMB requires advance payment, the request will not be considered received and further work will not be completed until the required payment is received. If the requester does not pay the advance payment within 30 calendar days after the date of the fee determination, the request will be closed.

(j) *Other statutes specifically providing for fees.* The fee schedule of this section does not apply to fees charged under any statute that specifically requires the NMB to set and collect fees for particular types of records. In instances where records responsive to a request are subject to a statutorily-based fee schedule program, the NMB must inform the requester of the contact information for that program.

(k) *Requirements for waiver or reduction of fees.* (1) Requesters may seek a waiver of fees by submitting a written application demonstrating how disclosure of the requested information is in the public interest because it is likely to contribute significantly to public understanding of the operations or activities of the government and is not primarily in the commercial interest of the requester.

(2) The NMB will furnish records responsive to a request without charge or at a reduced rate when it determines, based on all available information, that the factors described in paragraphs (k)(2)(i) through (iii) of this section are satisfied:

(i) Disclosure of the requested information would shed light on the operations or activities of the government. The subject of the request must concern identifiable operations or activities of the Federal Government with a connection that is direct and clear, not remote or attenuated.

(ii) Disclosure of the requested information is likely to contribute significantly to public understanding of those operations or activities. This factor is satisfied when the following criteria are met:

(A) Disclosure of the requested records must be meaningfully informative about government operations or activities. The disclosure of information that already is in the public domain, in either the same or a substantially identical form, would not be meaningfully informative if nothing new would be added to the public's understanding.

(B) The disclosure must contribute to the understanding of a reasonably broad audience of persons interested in the subject, as opposed to the individual understanding of the requester. A requester's expertise in the subject area as well as the requester's ability and intention to effectively convey information to the public must be considered. Agencies will presume that a representative of the news media will satisfy this consideration.

(iii) The disclosure must not be primarily in the commercial interest of the requester. To determine whether disclosure of the requested information is primarily in the commercial interest of the requester, agencies will consider the following criteria:

(A) The NMB will identify whether the requester has any commercial interest that would be furthered by the requested disclosure. A commercial interest includes any commercial, trade, or profit interest. Requesters must be given an opportunity to provide explanatory information regarding this consideration.

(B) If there is an identified commercial interest, the NMB must determine whether that is the primary interest furthered by the request. A waiver or reduction of fees is justified when the requirements of paragraphs (k)(2)(i) and (ii) of this section are satisfied and any commercial interest is not the primary interest furthered by the request. The NMB will presume that when a news media requester has satisfied the factors in paragraphs (k)(2)(i) and (ii) of this section, the request is not primarily in the commercial interest of the requester. Disclosure to data brokers or others who merely compile and market government information for direct economic return will not be presumed to primarily serve the public interest.

(3) Where only some of the records to be released satisfy the requirements for a waiver of fees, a waiver will be granted for those records.

(4) Requests for a waiver or reduction of fees should be made when the request is first submitted and should address the criteria referenced above. A requester may submit a fee waiver request at a later time so long as the underlying record request is pending or on administrative appeal. When a requester who has committed to pay fees subsequently asks for a waiver of those fees and that waiver is denied, the requester must pay any costs incurred up to the date the fee waiver request was received.

§ 1208.7 Subpoenas and other requests for testimony and production of documents in legal proceedings where the NMB is not a party.

(a) In legal proceedings between private litigants, a subpoena or other demand for the production of records held by the Agency or for oral or written testimony of a current or former NMB employee should be addressed to the General Counsel, National Mediation Board, 1301 K Street NW., Suite 250E, Washington, DC 20005. No other official or employee of the NMB is authorized to accept service of a demand or subpoena on behalf of the Agency.

(b) No current or former employee may produce official records or information or provide testimony in response to a demand or subpoena unless authorized by the General Counsel.

(c) The General Counsel may grant an employee permission to testify or produce official records or information in response to a demand or subpoena. In making this determination, the General Counsel shall consider whether:

(1) Release of the requested records or testimony is prohibited under § 1208.5;

(2) The disclosure is appropriate under the rules of procedure governing the case or matter;

(3) The requested testimony or records are privileged under the relevant substantive law concerning privilege;

(4) Disclosure would violate a statute or regulation;

(5) Disclosure would reveal trade secrets without the owner's consent; and

(6) Allowing testimony or production of records would be in the best interest of the NMB or the United States.

Dated: November 3, 2016.

Mary Johnson,

General Counsel, National Mediation Board.

[FR Doc. 2016–26986 Filed 11–10–16; 8:45 am]

BILLING CODE 7550–01–P

FEDERAL COMMUNICATIONS COMMISSION

47 CFR Part 73

[DA 16–1229; MB Docket No. 16–362; RM–11776]

Radio Broadcasting Services; Mullin, Texas

AGENCY: Federal Communications Commission.

ACTION: Proposed rule.

SUMMARY: This document proposes to amend the FM Table of Allotments, by substituting Channel 277A for vacant Channel 224A at Mullin, Texas, to accommodate the hybrid application requesting modification of the license for Station KNUZ(FM), San Saba, Texas to specify operation on Channel 224A rather than Channel 291A at San Saba, Texas. A staff engineering analysis indicates that Channel 277A can be allotted to Mullin consistent with the minimum distance separation requirements of the Commission's rules with site restriction 3.1 km (1.9 miles) north of the city. The reference coordinates are 31–35–00 NL and 98–40–31 WL.

DATES: Comments must be filed on or before December 19, 2016, and reply comments on or before January 3, 2017.

ADDRESSES: Federal Communications Commission, 445 12th Street SW., Washington, DC 20554. In addition to filing comments with the FCC, interested parties should serve the rule making petitioner and the counter proponent as follows: John C. Trent, Esq., Putbrese, Hunsaker & Trust, 200 S. Church Street, Woodstock, VA 22664.

FOR FURTHER INFORMATION CONTACT: Adrienne Y. Denysyk, Media Bureau, (202) 418–2700.

SUPPLEMENTARY INFORMATION: This is a synopsis of the Commission's *Notice of Proposed Rule Making,* MB Docket No. 16–362, adopted October 27, 2016. The FM Table of Allotment does not contain vacant Channel 224A at Mullins, Texas because the channel was removed from the FM Table because it was auctioned in Auction 93, and considered an authorized station. *See* 79 FR 64125, published October 28, 2014. Channel 224A at Mullins, Texas is no longer considered an authorized station but instead a vacant allotment because the construction permit for Station DKFON was cancelled on January 8, 2016. *See* File No. BNPH–20120523ABP. The full text of this Commission decision is available for inspection and copying during normal business hours in the FCC's Reference Information Center at Portals II, CY–A257, 445 12th Street, SW., Washington, DC 20554. The full text is also available online at *http://apps.fcc.gov/ecfs/.* This document does not contain proposed information collection requirements subject to the Paperwork Reduction Act of 1995, Public Law 104–13. In addition, therefore, it does not contain any proposed information collection burden ''for small business concerns with fewer than 25 employees,'' pursuant to the Small Business Paperwork Relief Act of 2002, Public Law 107–198, *see* 44 U.S.C. 3506(c)(4).

Provisions of the Regulatory Flexibility Act of l980 do not apply to this proceeding.

Members of the public should note that from the time a Notice of Proposed Rule Making is issued until the matter is no longer subject to Commission consideration or court review, all *ex parte* contacts are prohibited in Commission proceedings, such as this one, which involve channel allotments. See 47 CFR 1.1204(b) for rules governing permissible *ex parte* contacts.

For information regarding proper filing procedures for comments, see 47 CFR 1.415 and 1.420.

List of Subjects in 47 CFR Part 73

Radio, Radio broadcasting.

Federal Communications Commission.

Nazifa Sawez,

Assistant Chief, Audio Division, Media Bureau.

For the reasons discussed in the preamble, the Federal Communications Commission proposes to amend 47 CFR part 73 as follows:

PART 73—RADIO BROADCAST SERVICES

■ 1. The authority citation for part 73 continues to read as follows:

Authority: 47 U.S.C. 154, 303, 334, 336 and 339.

§ 73.202 [Amended]

■ 2. In § 73.202(b) amend the table under Texas by adding Mullin, Channel 277A to read as follows:

§ 73.202 Table of Allotments.

* * * * *

(b) *Table of FM Allotments.*

Texas	
* * * * *	
Mullin	277A
* * * * *	

* * * * *

[FR Doc. 2016–27221 Filed 11–10–16; 8:45 am]

BILLING CODE 6712–01–P

DEPARTMENT OF THE INTERIOR

Fish and Wildlife Service

50 CFR Parts 28 and 29

[Docket No. FWS–HQ–NWRS–2012–0086; FXRS12610900000–167–FF09R24000]

RIN 1018–AX36

Management of Non-Federal Oil and Gas Rights

AGENCY: Fish and Wildlife Service, Interior.

ACTION: Proposed rule; availability of record of decision.

SUMMARY: We, the U.S. Fish and Wildlife Service (Service), make available the final record of decision (ROD) on revising regulations governing non-Federal oil and gas activities on National Wildlife Refuge System lands in order to improve our ability to protect refuge resources, visitors, and the general public's health and safety from potential impacts associated with non-Federal oil and gas operations located within refuges. The Service has selected Alternative B, implementation of the final rule, Management of Non-Federal Oil and Gas Rights, which revises current Service regulations, as its final decision. This decision is described and analyzed in the final environmental impact statement and summarized in the ROD.

ADDRESSES: Copies of the ROD are available for public review at *http://www.fws.gov/refuges/oil-and-gas/rulemaking.html* and at *http://www.regulations.gov* under Docket No. FWS–HQ–NWRS–2012–0086.

FOR FURTHER INFORMATION CONTACT: Scott Covington, U.S. Fish and Wildlife Service, Division of Natural Resources and Planning, MS: NWRS, 5275 Leesburg Pike, Falls Church, Virginia 22041; telephone 703–358–2427. If you use a telecommunications device for the deaf (TDD), call the Federal Information Relay Service (FIRS) at 800–877–8339. Further contact information can be found on the Refuge's Energy Program Web site at *http://www.fws.gov/refuges/oil-and-gas/rulemaking.html.*

SUPPLEMENTARY INFORMATION:

Background

With this document, we announce the availability of the record of decision (ROD) for the final environmental impact statement (EIS) analyzing revisions to the Service's regulations governing non-Federal oil and gas development on lands of the National Wildlife Refuge System (NWRS). Non-Federal oil and gas development refers to oil and gas activities associated with any private, State, or tribally owned mineral interest where the surface estate is administered by the Service as part of the Refuge System.

On February 24, 2014, we issued an advance notice of proposed rulemaking (79 FR 10080) to assist us in developing a proposed rule and announced our intent to prepare an EIS; the comment period for this document closed April 25, 2014. In response to requests we received, on June 9, 2014, we reopened the comment period until July 9, 2014 (79 FR 32903). During the two comment periods, we received almost 80,000 responses, mostly form letters, of which greater than 99 percent were in support of revising the existing regulations. We reviewed and considered substantive comments as we drafted the proposed rule. On December 11, 2015, we published a proposed rule and draft EIS (80 FR 77200). In response to the proposed rule and draft EIS, we received almost 40,000 responses, mostly form letters. All comments we received were carefully considered and, where appropriate, incorporated into the final rule and EIS. On August 22, 2016, we announced the availability of a final EIS, which evaluated the impacts of three alternatives (81 FR 56575):

The FEIS evaluates the impacts of the following three alternatives:

Alternative A, the no-action alternative, retains the current level of regulation and oversight of oil and gas activities by the Service.

Alternative B, the Service's selected alternative to implement, establishes a uniform process for when and how an operator must obtain an ''operations permit'' and ensures that all new operations on the NWRS are conducted under a suite of performance-based standards for avoiding or minimizing impacts to refuge resources or visitor uses. Alternative B also ensures that all operators on the NWRS successfully reclaim their area of operations once operations end. Under Alternative B, operations in Alaska would continue to be governed by title XI of the Alaska National Interest Lands Conservation Act (16 U.S.C. 410hh–410hh–5, 16 U.S.C. 3101 *et seq.,* 43 U.S.C. 1601 *et seq.*), and the Department's implementing regulations and standards found at 43 CFR part 36.

Alternative C includes all the proposed changes in Alternative B, with these additions: Service jurisdiction would expand to regulate non-Federal oil and gas operations that occur on private surface within the boundary of a refuge (*i.e.,* inholdings) and to operations on non-Federal surface locations that use directional drilling to access non-Federal oil and gas underneath the surface of a refuge; and performance-based standards and the permitting process would expand to actively regulate downhole operations such as well cementing, well casing, and well integrity testing.

Decision

The Service has determined that Alternative B, the agency-preferred alternative, best meets the agency's purpose and needs for revising regulations governing non-Federal oil and gas activities on the NWRS, because it most appropriately balances protection for refuge resources and uses with the administrative and cost burden imposed on both the regulated community and the Service. Therefore, it is the Service's decision to implement Alternative B, and make final the rule defined by that alternative for managing non-Federal oil and gas activities on the NWRS. This decision is based on the information contained in the final EIS. The ROD was prepared pursuant to the requirements of the Council on Environmental Quality regulations for implementing NEPA at 40 CFR parts 1500–1508 and the Department of the Interior's implementing regulations.

Authority

We issue this document under the authority of the National Environmental Policy Act (NEPA) (42 U.S.C. 4321 *et seq.*) and the Department of the Interior regulations that implement NEPA (part 46 of title 43 of the Code of Federal Regulations) and the National Wildlife Refuge System Administration Act, as amended by the National Wildlife Refuge System Improvement Act (16 U.S.C. 668dd *et seq.*).

Dated: October 5, 2016

Michael J. Bean,

Principal Deputy Assistant Secretary for Fish and Wildlife and Parks.

[FR Doc. 2016–27215 Filed 11–10–16; 8:45 am]

BILLING CODE 4333–15–P

DEPARTMENT OF COMMERCE

National Oceanic and Atmospheric Administration

50 CFR Part 635

RIN 0648–BD22

Atlantic Highly Migratory Species; Atlantic Shark Management Measures; Draft Amendment 5b

AGENCY: National Marine Fisheries Service (NMFS), National Oceanic and Atmospheric Administration (NOAA), Commerce.

ACTION: Notice of change of public hearing location.

SUMMARY: On October 18, 2016, NMFS published a proposed rule for Amendment 5b to the 2006 Consolidated Highly Migratory Species (HMS) Fishery Management Plan (FMP) based on the results of the 2016 stock assessment update for Atlantic dusky sharks. Based on the assessment update, NMFS determined that the stock remains overfished and is experiencing overfishing. As described in the proposed rule, NMFS proposed management measures that would reduce fishing mortality on dusky sharks and rebuild the dusky shark population, consistent with legal requirements. The proposed rule included times and locations of several public hearings. This notice announces that we are changing the location of the Florida public hearing.

DATES: NMFS will hold six public hearings on Draft Amendment 5b as announced in the October 18, 2016 proposed rule, except the November 21, 2016 meeting location has changed from Melbourne, Florida, to Satellite Beach, Florida. Written comments on the October 18, 2016 proposed rule for Amendment 5b will be accepted until December 22, 2016. See **SUPPLEMENTARY INFORMATION** for the revised Florida meeting location. See **SUPPLEMENTARY INFORMATION** in the Amendment 5b proposed rule (October 18, 2016, 81 FR 71672) for the other public hearings, conference calls, and an HMS Advisory Panel meeting dates, times, and locations.

ADDRESSES: NMFS will hold a public hearing on the proposed rule for Amendment 5b to the 2006 Consolidated HMS FMP (October 18, 2016, 81 FR 71672) in Satellite Beach, FL. For specific location, date and time see the **SUPPLEMENTARY INFORMATION** section of this document.

Copies of the supporting documents—including the draft environmental impact statement (DEIS), Regulatory Impact Review (RIR), Initial Regulatory Flexibility Analysis (IRFA), and the 2006 Consolidated Atlantic HMS FMP are available from the HMS Web site at *http://www.nmfs.noaa.gov/sfa/hms/* or by contacting Tobey Curtis at 978–281–9273.

FOR FURTHER INFORMATION CONTACT: Tobey Curtis at 978–281–9273 or Karyl Brewster-Geisz at 301–427–8503.

SUPPLEMENTARY INFORMATION:

Background

On October 18, 2016, NMFS published a proposed rule (81 FR 71672) for Draft Amendment 5b to the 2006 Consolidated HMS FMP based on the results of the 2016 stock assessment update for Atlantic dusky sharks. Based on this assessment, NMFS determined that the dusky shark stock remains overfished and is experiencing overfishing and in the Draft Amendment proposed management measures that would reduce fishing mortality on dusky sharks and rebuild the dusky shark population consistent with legal requirements. The comment period for the proposed rule closes December 22, 2016, and any comments received during the comment period will be considered in the development of Final Amendment 5b to the 2006 Consolidated HMS FMP.

Request for Comments

As announced in the proposed rule, NMFS will hold six public hearings (in New Jersey, Rhode Island, Louisiana, Texas, Florida, and North Carolina) to provide the opportunity for public comment on the proposed measures. NMFS will also hold one public conference call/webinar to provide individuals an opportunity to submit public comment if they are unable to attend a public hearing. Due to a scheduling conflict at the Melbourne Public Library, the location of the Florida public hearing announced in the proposed rule has changed. The public hearing will now be held in Satellite Beach, FL; the date and time have not

changed (Table 1). None of the other public hearing locations have changed.

TABLE 1—DATE, TIME AND LOCATION OF RESCHEDULED PUBLIC HEARING

Venue	Date/Time	Meeting locations	Location contact information
Public Hearing	November 21, 2016, 5 p.m.–8 p.m..	Satellite Beach, FL	Satellite Beach Public Library, 751 Jamaica Blvd., Satellite Beach, FL 32937.

The public is reminded that NMFS expects participants at the public hearing to conduct themselves appropriately. At the beginning of each public hearing, a representative of NMFS will explain the ground rules (*e.g.,* alcohol is prohibited from the hearing room; attendees will be called to give their comments in the order in which they registered to speak; each attendee will have an equal amount of time to speak; and attendees should not interrupt one another). The NMFS representative will attempt to structure the meeting so that all attending members of the public will be able to comment, if they choose, regardless of the controversial nature of the subject(s). Attendees are expected to respect the ground rules, and, if they do not, they may be asked to leave the hearing or conference call.

Authority: 16 U.S.C. 971 *et seq.;* 16 U.S.C. 1801 *et seq.*

Dated: November 8, 2016.

Jennifer M. Wallace,

Acting Director, Office of Sustainable Fisheries, National Marine Fisheries Service.

[FR Doc. 2016–27287 Filed 11–10–16; 8:45 am]

BILLING CODE 3510–22–P

Notices

Federal Register
Vol. 81, No. 219
Monday, November 14, 2016

This section of the FEDERAL REGISTER contains documents other than rules or proposed rules that are applicable to the public. Notices of hearings and investigations, committee meetings, agency decisions and rulings, delegations of authority, filing of petitions and applications and agency statements of organization and functions are examples of documents appearing in this section.

DEPARTMENT OF AGRICULTURE

Food and Nutrition Service

Agency Information Collection Activities: Revision of Approved Information Collection; Comment Request—Supplemental Nutrition Assistance Program (SNAP): Operating Guidelines, Forms and Waivers

AGENCY: Food and Nutrition Service (FNS), USDA.

ACTION: Notice.

SUMMARY: In accordance with the Paperwork Reduction Act of 1995, this notice invites the general public and other public agencies to comment on this information collection. This is a revision of a currently approved collection. This information collection package consists of five components of State agency reporting and/or recordkeeping: a budget projection statement, a program activity report, State plans of operation updates, waiver requests and other plans and submissions such as advance planning documents for information systems and for electronic benefit transfer (EBT) systems.

DATES: Written comments must be received on or before January 13, 2017.

ADDRESSES: Comments are invited on: (a) Whether the proposed collection of information is necessary for the proper performance of the functions of the agency, including whether the information shall have practical utility; (b) the accuracy of the agency's estimate of the burden of the proposed collection of information, including the validity of the methodology and assumptions that were used; (c) ways to enhance the quality, utility and clarity of the information to be collected; and (d) ways to minimize the burden of the collection of information on those who are to respond, including use of appropriate automated, electronic, mechanical or other technological collection techniques or other forms of information technology.

Comments may be sent to: Ralph Badette, Food and Nutrition Service, U.S. Department of Agriculture, 3101 Park Center Drive, Room 818, Alexandria, VA 22302. Comments will also be accepted through the Federal eRulemaking Portal. Go to *http://www.regulations.gov,* and follow the online instructions for submitting comments electronically.

All written comments will be open for public inspection at the office of the Food and Nutrition Service during regular business hours (8:30 a.m. to 5:00 p.m. Monday through Friday) at 3101 Park Center Drive, Room 810, Alexandria, Virginia 22302.

All responses to this notice will be summarized and included in the request for Office of Management and Budget approval. All comments will be a matter of public record.

FOR FURTHER INFORMATION CONTACT: Requests for additional information or copies of this information collection should be directed to Ralph Badette at 703–457–7717.

SUPPLEMENTARY INFORMATION:

Title: Operating Guidelines, Forms and Waivers.

OMB Number: 0584–0083.

Forms: FNS–366A; FNS–366B; SNAP Waiver Request Form

Expiration Date: April 30, 2017.

Type of Request: Revision of a currently approved collection.

Abstract: Section 16(a) of the Food and Nutrition Act of 2008 (the Act) authorizes 50 percent Federal reimbursement for State agency costs to administer the program. 7 CFR 272.2(a) of SNAP regulations requires that State agencies plan and budget program operations and establish objectives for the next year. The basic components of the State Plan of Operation are the Federal/State Agreement, the Budget Projection Statement (FNS–366A) and the Program Activity Statement (FNS–366B) (7 CFR 272.2(a)(2)). Under 7 CFR 272.2(c), the State agency shall submit to FNS for approval a Budget Projection Statement (which projects total Federal administrative costs for the upcoming fiscal year) and a Program Activity Statement (which provides program activity data for the preceding fiscal year). In addition, certain attachments to the plan as specified in subparagraphs (c) and (d) are to be submitted. As specified in subparagraph (f), State agencies only have to provide FNS with changes to these attachments as they occur. Consequently, these attachments are considered State plan updates. Under Section 11(o) of the Act each State agency is required to develop and submit plans for the use of automated data processing (ADP) and information retrieval systems to administer SNAP. Section 16(a) of the Act authorizes partial Federal reimbursement of State costs for State ADP systems that the Secretary determines will assist meeting the requirements of the Act, meets conditions prescribed by the Secretary, are likely to provide more efficient and effective administration of the program, and are compatible with certain other Federally-funded systems.

Under 7 CFR 277.18(c)(1) of SNAP regulations, State agencies must obtain prior written approval from FNS when it plans to acquire ADP equipment with a total acquisition cost of $5 million or more in Federal and State funds. The State agency must submit an Advance Planning Document (APD) prior to acquiring planning services and an Implementation APD prior to acquiring ADP equipment or services. Additionally, State agencies administering SNAP may submit formal written requests, SNAP waiver requests, to obtain approval from FNS to deviate from a specific program rule or regulation. Current procedures require that in order for FNS to approve a SNAP waiver request, the State agency must submit the SNAP Waiver Request Form via the SWIM application.

In 2014, FNS submitted a change justification for the SNAP Recipient Trafficking Data Survey, which added 26.5 hours to this burden. This survey is no longer being conducted, and the associated hours are removed from this collection with this notice. The reporting burden for forms FNS–366A and FNS–366B was merged in 2015 with the burden for the Food Programs Reporting System (OMB control number 0584–0594, expiration date September 30, 2019); therefore, reporting hours associated with these forms are removed from this collection with this notice. However, recordkeeping requirements for these forms remains in this OMB Control Number.

Burden Estimates

The burden within this collection consists of reporting and recordkeeping burden for the State Plan of Operation Updates and APD Plans or Updates; reporting burden for SNAP Waiver Requests via the SNAP Workflow Information Management (SWIM) system; and recordkeeping burden for forms FNS–366A and FNS–366B. The current burden is 2,754 hours. The revised estimated burden for this collection is 1,120.95 hours (1,088.62 reporting hours and 32.33 recordkeeping hours). This results in a decrease of 1,633 hours, which is a result of removing the reporting burden for forms FNS–366A and FNS–366B and the SNAP Trafficking Survey from this collection. The calculation of the burden for each of these components is described below:

Reporting

Reporting Burden Estimates:

Affected Public: State, Local and Tribal Government Agencies.

Estimated Number of Respondents: 53.

Estimated Number of Responses per Respondent: 8.35.

Estimated Total Annual Responses: 442.3.

Estimated Reporting Time per Response: 3.36.

Estimated Annual Reporting Burden Hours: 1,088.62.

State Plan of Operation Updates. Fifty-three (53) State agencies submit 1 response annually for a total of 53 annual responses. The reporting burden for submission of updates to State Plans of Operation is 6.58 hours per respondent, resulting in estimated burden hours of 348.99 (53 × 6.5847 = 348.99).

APD Plans or Updates. We estimate that up to 53 State agencies may submit on an average of four (4) APD, plan, or update submission for a total of 212 annual responses at an average estimate of 2.5 hours per respondent. The reporting burden is 530 hours.

SNAP Waiver Request Form. FNS estimates that out of 53 State agencies 45 State will submit 3.94 of the three identified waivers annually for a total number of 177 Waivers annually. Completion and submission of these waivers take approximately 1 hour for a total of 177 burden hours annually.

Affected public	Forms	Number of respondents	Frequency of response	Total annual responses	Time per response (hrs)	Annual reporting burden hours
State Agencies	Plan of Operation Updates	53	1	53	6.58	348.99
	Other APD Plan or Update	53	4	212	2.5	530
	SNAP Waiver Request Form (SWIM).	45	3.94	177.3	1	177.3
Reporting Total Burden Estimates.		53.00	2.98	442.3	3.36	1,056.29

Recordkeeping

Recordkeeping Burden Estimates:

Affected Public: State, Local and Tribal Government Agencies.

Estimated Number of Recordkeepers: 53.

Estimated Number of Records per Recordkeepers: 6.84.

Estimated Total Annual Records: 363.

Estimated Recordkeeping time per Recordkeepers: 0.07.

Estimated Annual Recordkeeping Burden Hours: 31.77.

FNS–366A. State agencies are required to submit to FNS for approval a Budget Projection Statement, Form FNS–366A, which includes projections of the total Federal costs for major areas of program operations. There is a total of 53 recordkeepers for each activity. Each State agency submits 1 response annually for a total of 53 annual responses. A copy is maintained for 3 years. It takes approximately 0.05 minutes to maintain each record. Total annual recordkeeping burden for FNS–366A is estimated at 2.65 hours annually per recordkeeper.

FNS–366B. State agencies are required to submit to FNS a Program Activity Statement, Form FNS–366B, providing a summary of program activity for the State agency's operations during its preceding fiscal year. Each State agency submits 1 response annually for a total of 53 annual responses; each record takes approximately 0.05 minutes to maintain. The annual recordkeeping burden for FNS–366B is estimated annually at 2.65 hours per recordkeeper.

State Plan of Operation Updates. Each State agency submits 1 response annually for a total of 45 annual responses; each record takes approximately 0.07 minutes to maintain. The annual recordkeeping burden for updates to State Plans of Operation as attachments to the FNS–366B is 3.15 hours per record-keeper.

Other APD Plans and Updates. FNS estimated that up to 53 State agencies may submit an average of 4 APD, Plan, or Update submissions and approximately 212 records at an average estimate of 0.11 minutes per record keeper for an estimated total of 23.32 recordkeeping burden for this activity hours.

Affected public	(b) Form No. or activity	(c) Number recordkeepers	(d) Number records per respondent	(e) Estimate total annual records (cxd)	(f) Hours per recordkeeper	(g) Total burden (exf)
RECORDKEEPING						
State Agencies	FNS–366A	53	1	53	0.05	2.65
	FNS–366B	53	1	53	0.05	2.65
	Plan of Operations Updates	45	1	45	0.07	3.15
	Other APD Plan or Update	53	4	212	0.11	23.32
Recordkeeping Total Burden Estimates.		53	1.75	363	0.07	31.77

Dated: October 26, 2016.

Telora T. Dean,

Acting Administrator, Food and Nutrition Service.

[FR Doc. 2016–27334 Filed 11–10–16; 8:45 am]

BILLING CODE 3410–34–P

COMMISSION OF CIVIL RIGHTS

Sunshine Act Meeting Notice

AGENCY: United States Commission on Civil Rights.

ACTION: Notice of Commission business meeting.

SUMMARY: Notice is hereby given, pursuant to the provisions of the rules and regulations of the U.S. Commission on Civil Rights (Commission), and the Federal Advisory Committee Act (FACA), that a Business Meeting of the U.S. Commission on Civil Rights will be convened at 10 a.m. on Friday, November 18, 2016.

DATES: Friday, November 18, 2016, at 10 a.m. EST.

ADDRESSES: National Place Building, 1331 Pennsylvania Ave. NW., 11th Floor, Suite 1150, Washington, DC 20425 (Entrance on F Street NW.).

FOR FURTHER INFORMATION CONTACT: Brian Walch, Communications and Public Engagement Director. Telephone: (202) 376–8371; TTY: (202) 376–8116; Email: *publicaffairs@usccr.gov.*

SUPPLEMENTARY INFORMATION: This business meeting is open to the public. If you would like to listen to the business meeting, please contact the above for the call-in information.

Hearing-impaired persons who will attend the briefing and require the services of a sign language interpreter should contact Pamela Dunston at (202) 376–8105 or at *signlanguage@usccr.gov* at least three business days before the scheduled date of the meeting.

Meeting Agenda

I. Approval of Agenda
II. Business Meeting
A. Program Planning
- Discussion and Vote on Outline, Timeline, and Discovery Plan for FY2017 Statutory Enforcement Report

B. State Advisory Committees
- Presentation by the Chair of the Michigan Advisory Committee on the Committee's Report on Civil Forfeiture in Michigan
- State Advisory Committee Appointments
- Arkansas
- Pennsylvania
- Iowa
- Ohio

C. Management and Operations.
- Staff Director's Report

III. Adjourn Meeting

Dated: November 9, 2016.

Brian Walch,

Director, Communications and Public Engagement.

[FR Doc. 2016–27403 Filed 11–9–16; 11:15 am]

BILLING CODE 6335–01–P

DEPARTMENT OF COMMERCE

Economics and Statistics Administration

Request for Nominations of Member To Serve on the Commerce Data Advisory Council (CDAC)

AGENCY: Economics and Statistics Administration (ESA), Department of Commerce.

ACTION: Notice of request for nominations to the CDAC.

SUMMARY: The Secretary of Commerce is requesting nomination of individuals to the Commerce Data Advisory Council. The Secretary will consider nominations received in response to this notice, as well as from other sources. The **SUPPLEMENTARY INFORMATION** section of this notice provides committee and membership criteria.

DATES: The Economics and Statistics Administration must receive nominations for members by midnight November 10, 2016.

ADDRESSES: Please submit nominations to the email account *DataAdvisoryCouncil@doc.gov*, this account is specifically set up to receive Data Advisory Council applications. Nominations may also be submitted by postal delivery to Burton Reist, Director of External Affairs, Economics and Statistics Administration/DFO CDAC, Department of Commerce, 1401 Constitution Avenue NW., Washington, DC 20230.

FOR FURTHER INFORMATION CONTACT: Burton Reist, Director of External Affairs, Economics and Statistics Administration, Department of Commerce, at (202) 482–3331 or email *BReist@doc.gov*, also at 1401 Constitution Avenue NW., Washington, DC 20230.

SUPPLEMENTARY INFORMATION:

I. Background

The Department of Commerce (Department) collects, compiles, analyzes, and disseminates a treasure trove of data, including data on the Nation's economy, population, and environment. This data is fundamental to the Department's mission and is used for the protection of life and property, for scientific purposes, and to enhance economic growth. However, the Department's capacity to disseminate the increasing amount of data held and to disseminate it in formats most useful to its customers is significantly constrained.

In order to realize the potential value of the data the Department collects, stores, and disseminates, the Department must minimize barriers to accessing and using the data. Consistent with privacy and security considerations, the Department is firmly committed to unleashing its untapped data resources in ways that best support downstream information access, processing, analysis, and dissemination.

The Commerce Data Advisory Council (CDAC) provides advice and recommendations, to include process and infrastructure improvements, to the Secretary on ways to make Commerce data easier to find, access, use, combine and disseminate. The aim of this advice shall be to maximize the value of Commerce data to all users including governments, businesses, communities, academia, and individuals.

The Secretary will draw CDAC membership from the data industry academia, non-profits and state and local governments with a focus on recognized expertise in collection, compilation, analysis, and dissemination. As privacy concerns span the entire data lifecycle, expertise in privacy protection also will be represented on the Council. The Secretary will select members that represent the entire spectrum of Commerce data including demographic, economic, scientific, environmental, patent, and geospatial data. The Secretary will select members from the information technology, business, non-profit, and academic communities, and state and local governments. Collectively, their knowledge will include all types of data Commerce distributes and the full lifecycle of data collection, compilation, analysis, and dissemination.

II. Description of Duties

The Council shall advise the Secretary on ways to make Commerce data easier to find, access, use, combine, and disseminate. Such advice may include recommended process and infrastructure improvements. The aim of this advice shall be to maximize the value of Commerce data to governments, businesses, communities, and individuals.

In carrying out its duties, the Council may consider the following:

—Data management practices that make it easier to track and disseminate integrated, interoperable data for diverse users;

—Best practices that can be deployed across Commerce to achieve common, open standards related to taxonomy, vocabulary, application programming interfaces (APIs), metadata, and other key data characteristics;

—Policy issues that arise from expanding access to data, including issues related to privacy, confidentiality, latency, and consistency;

—Opportunities and risks related to the combination of public and private data sources and the development of joint data products and services resulting from public-private partnerships;

—External uses of Commerce data and similar federal, state, and private data sets by businesses; and,

—Methods to enhance communication and collaboration between stakeholders and subject-matter experts at Commerce on data access and use.

The Council meets up to four times a year, budget permitting. Special meetings may be called when appropriate.

Federal Advisory Committee Act (5 U.S.C. Appendix 2), which sets forth standards for the formation and use of advisory committees, is the governing instrument for the CDAC.

III. Membership

1. The Council shall consist of up to 20 members.

2. The Secretary shall select and appoint members and members shall serve at the pleasure of the Secretary.

3. Members shall represent a cross-section of business, academic, non-profit, and non-governmental organizations.

4. The Secretary will choose members of the Council who ensure objectivity and balance, a diversity of perspectives, and guard against potential for conflicts of interest.

5. Members shall be prominent experts in their fields, recognized for their professional and other relevant achievements and their objectivity.

6. In order to ensure the continuity of the Commerce Data Advisory Council, the Council shall be appointed so that each year the terms expire of approximately one-third of the members of the Council.

7. Council members serve for terms of two years and may be reappointed to any number of additional terms. Initial appointments may be for 12-, 18- and 24-month increments to provide staggered terms.

8. Nominees must be able to actively participate in the tasks of the Council, including, but not limited to regular meeting attendance, Council meeting discussant responsibilities, and review of materials, as well as participation in conference calls, webinars, working groups, and special Council activities.

9. Should a council member be unable to complete a two-year term and when vacancies occur, the Secretary will select replacements who can best either replicate the expertise of the departing member or provide the CDAC with a new, identified needed area of expertise. An individual chosen to fill a vacancy shall be appointed for the remainder of the term of the member replaced or for a two-year term as deemed. A vacancy shall not affect the exercise of any power of the remaining members to execute the duties of the Council.

10. No employee of the federal government can serve as a member of the Census Scientific Advisory Committee.

All members of the Commerce Data Advisory Council shall adhere to the conflict of interest rules applicable to Special Government Employees as such employees are defined in 18 U.S.C. 202(a). These rules include relevant provisions in 18 U.S.C. related to criminal activity, Standards of Ethical Conduct for Employees of the Executive Branch (5 CFR part 2635), and Executive Order 12674 (as modified by Executive Order 12731).

IV. Compensation

1. Membership is under voluntary circumstances and therefore members do not receive compensation for service on the Commerce Data Advisory Council.

2. Members shall receive per diem and travel expenses as authorized by 5 U.S.C. 5703, as amended, for persons employed intermittently in the Government service.

V. Nominations Information

The Secretary will consider nominations of all qualified individuals to ensure that the CDAC includes the areas of subject matter expertise noted above (see ''Background and Membership''). Individuals may nominate themselves or other individuals, and professional associations and organizations may nominate one or more qualified persons for membership on the CDAC. Nominations shall state that the nominee is willing to serve as a member of the Council.

A nomination package should include the following information for each nominee:

1. A letter of nomination stating the name, affiliation, and contact information for the nominee, the basis for the nomination (*i.e.*, what specific attributes recommend him/her for service in this capacity), and the nominee's field(s) of expertise;

2. A biographical sketch of the nominee and a copy of his/her resume or curriculum vitae; and

3. The name, return address, email address, and daytime telephone number at which the nominator can be contacted.

The Department of Commerce is committed to equal opportunity in the workplace and seeks diverse Committee membership. The Department has special interest in assuring that women, minority groups, and the physically disabled are adequately represented on advisory committees; and therefore, extends particular encouragement to nominations for appropriately qualified female, minority, or disabled candidates. The Department of Commerce also encourages geographic diversity in the composition of the Council. All nomination information should be provided in a single, complete package and received by the stated deadline, November 10, 2016. Interested applicants should send their nomination package to the email or postal address provided above.

Potential candidates will be asked to provide detailed information concerning financial interests, consultancies, research grants, and/or contracts that might be affected by recommendations of the Council to permit evaluation of possible sources of conflicts of interest. Finally, nominees will be required to certify that they are not subject to the Foreign Agents Registration Act (22 U.S.C. 611) or the Lobbying Disclosure Act (2 U.S.C. 1601 *et seq.*).

Dated: November 5, 2016.

Austin Durrer,

Chief of Staff for Under Secretary for Economic Affairs.

[FR Doc. 2016–27296 Filed 11–10–16; 8:45 am]

BILLING CODE P

DEPARTMENT OF COMMERCE

Foreign-Trade Zones Board

[Order No. 2015]

Approval of Subzone Status; G2 LNG LLC; Cameron, Louisiana

Pursuant to its authority under the Foreign-Trade Zones Act of June 18, 1934, as amended (19 U.S.C. 81a–81u), the Foreign-

Trade Zones Board (the Board) adopts the following Order:

Whereas, the Foreign-Trade Zones Act provides for ''. . . the establishment . . . of foreign-trade zones in ports of entry of the United States, to expedite and encourage foreign commerce, and for other purposes,'' and authorizes the Foreign-Trade Zones Board to grant to qualified corporations the privilege of establishing foreign-trade zones in or adjacent to U.S. Customs and Border Protection ports of entry;

Whereas, the Board's regulations (15 CFR part 400) provide for the establishment of subzones for specific uses;

Whereas, the West Cameron Port Commission, grantee of Foreign-Trade Zone 291, has made application to the Board for the establishment of a subzone at the facility of G2 LNG LLC located in Cameron, Louisiana (FTZ Docket B–22–2016, docketed April 20, 2016);

Whereas, notice inviting public comment has been given in the **Federal Register** (81 FR 24563, April 26, 2016) and the application has been processed pursuant to the FTZ Act and the Board's regulations; and,

Whereas, the Board adopts the findings and recommendations of the examiner's memorandum, and finds that the requirements of the FTZ Act and the Board's regulations are satisfied;

Now, therefore, the Board hereby approves subzone status at the facility of G2 LNG LLC, located in Cameron, Louisiana (Subzone 291A), as described in the application and **Federal Register** notice, subject to the FTZ Act and the Board's regulations, including Section 400.13.

Signed at Washington, DC, this 1st day of November 2016.

Paul Piquado,

Assistant Secretary of Commerce for Enforcement and Compliance, Alternate Chairman, Foreign-Trade Zones Board.

Andrew McGilvray,

Executive Secretary.

[FR Doc. 2016–27344 Filed 11–10–16; 8:45 am]

BILLING CODE 3510–DS–P

DEPARTMENT OF COMMERCE

Foreign-Trade Zones Board

[Order No. 2018]

Reorganization of Foreign-Trade Zone 110 Under the Alternative Site Framework; Albuquerque, New Mexico

Pursuant to its authority under the Foreign-Trade Zones Act of June 18, 1934, as amended (19 U.S.C. 81a–81u), the Foreign-Trade Zones Board (the Board) adopts the following Order:

Whereas, the Board adopted the alternative site framework (ASF) (15 CFR Sec. 400.2(c)) as an option for the establishment or reorganization of zones;

Whereas, the City of Albuquerque, New Mexico, grantee of Foreign-Trade Zone 110, submitted an application to the Board (FTZ Docket B–32–2016, docketed May 10, 2016, amended August 22, 2016) for authority to reorganize under the ASF with a service area of Bernalillo and Valencia Counties and the Cities of Santa Fe, Rio Rancho, Bernalillo and Moriarty, New Mexico, in and adjacent to the Albuquerque, New Mexico U.S Customs and Border Protection port of entry, and FTZ 110's existing Site 1 would be categorized as a magnet site;

Whereas, notice inviting public comment was given in the **Federal Register** (81 FR 30516, May 17, 2016) and the application has been processed pursuant to the FTZ Act and the Board's regulations; and,

Whereas, the Board adopts the findings and recommendations of the examiner's report, and finds that the requirements of the FTZ Act and the Board's regulations are satisfied;

Now, Therefore, the Board hereby orders:

The amended application to reorganize FTZ 110 under the ASF is approved, subject to the FTZ Act and the Board's regulations, including Section 400.13, to the Board's standard 2,000-acre activation limit for the zone.

Signed at Washington, DC, this 1st day of November 2016.

Paul Piquado,

Assistant Secretary of Commerce for Enforcement and Compliance, Alternate Chairman, Foreign-Trade Zones Board.

ATTEST:

Andrew McGilvray,

Executive Secretary.

[FR Doc. 2016–27349 Filed 11–10–16; 8:45 am]

BILLING CODE 3510–DS–P

DEPARTMENT OF COMMERCE

Foreign-Trade Zones Board

[B–73–2016]

Foreign-Trade Zone (FTZ) 176—Rockford, Illinois; Notification of Proposed Production Activity; Brake Parts Inc (Automotive Parts Kitting); McHenry, Illinois

Brake Parts Inc (BPI) submitted a notification of proposed production activity to the FTZ Board for its facility in McHenry, Illinois, within FTZ 176. The notification conforming to the requirements of the regulations of the FTZ Board (15 CFR 400.22) was received on November 2, 2016.

The BPI facility is located within Subzone 176G. The facility is used for the kitting of aftermarket automotive parts. Pursuant to 15 CFR 400.14(b), FTZ activity would be limited to the specific foreign-status materials and components and specific finished products described in the submitted notification (as described below) and subsequently authorized by the FTZ Board.

Production under FTZ procedures could exempt BPI from customs duty payments on the foreign-status components used in export production. On its domestic sales, BPI would be able to choose the duty rates during customs entry procedures that apply to master cylinder kits, brake drum kits, brake pad kits, brake shoe kits and brake caliper kits (duty rate free to 2.5%) for the foreign-status inputs noted below. Customs duties also could possibly be deferred or reduced on foreign-status production equipment.

The components and materials sourced from abroad include: Rubber O-rings; rubber seals; rubber brake components; paperboard corrugated boxes; steel hex bolts; steel bolts; steel brake clips; galvanized cast iron brake brackets; master cylinders; brake drums; brake pads; brake shoes; and, wheel cylinders (duty rate ranges from free to 2.5%).

Public comment is invited from interested parties. Submissions shall be addressed to the Board's Executive Secretary at the address below. The closing period for their receipt is December 27, 2016,

A copy of the notification will be available for public inspection at the Office of the Executive Secretary, Foreign-Trade Zones Board, Room 21013, U.S. Department of Commerce, 1401 Constitution Avenue NW., Washington, DC 20230–0002, and in the ''Reading Room'' section of the Board's Web site, which is accessible via *www.trade.gov/ftz.*

For further information, contact Christopher Kemp at *Christopher.Kemp@trade.gov* or (202) 482–0862.

Dated: November 7, 2016.

Andrew McGilvray,

Executive Secretary.

[FR Doc. 2016–27335 Filed 11–10–16; 8:45 am]

BILLING CODE 3510–DS–P

DEPARTMENT OF COMMERCE

Foreign-Trade Zones Board

[Order No. 2017]

Reorganization of Foreign-Trade Zone 261 Under Alternative Site Framework; Alexandria, Louisiana

Pursuant to its authority under the Foreign-Trade Zones Act of June 18, 1934, as amended (19 U.S.C. 81a–81u), the Foreign-Trade Zones Board (the Board) adopts the following Order:

Whereas, the Board adopted the alternative site framework (ASF) (15 CFR Sec. 400.2(c)) as an option for the establishment or reorganization of zones;

Whereas, the England Economic & Industrial Development District, grantee of Foreign-Trade Zone 261, submitted an application to the Board (FTZ Docket B–37–2016, docketed May 25, 2016) for authority to reorganize under the ASF with a service area of Rapides Parish, Louisiana, adjacent to the Morgan City Customs and Border Protection port of entry, to remove Site 3 from the zone, and FTZ 261's existing Sites 1 and 2 would be categorized as magnet sites;

Whereas, notice inviting public comment was given in the **Federal Register** (81 FR 35298, June 2, 2016) and the application has been processed pursuant to the FTZ Act and the Board's regulations; and,

Whereas, the Board adopts the findings and recommendations of the examiner's report, and finds that the requirements of the FTZ Act and the Board's regulations are satisfied;

Now, therefore, the Board hereby orders:

The application to reorganize FTZ 261 under the ASF is approved, subject to the FTZ Act and the Board's regulations, including Section 400.13, to the Board's standard 2,000-acre activation limit for the zone, and to an ASF sunset provision for magnet sites that would terminate authority for Site 2 if not activated within five years from the month of approval.

Dated: November 1, 2016.

Paul Piquado,

Assistant Secretary of Commerce for Enforcement and Compliance, Alternate Chairman, Foreign-Trade Zones Board.

Andrew McGilvray,

Executive Secretary.

[FR Doc. 2016–27318 Filed 11–10–16; 8:45 am]

BILLING CODE 3510–DS–P

DEPARTMENT OF COMMERCE

International Trade Administration

[A–433–812]

Certain Carbon and Alloy Steel Cut-To-Length Plate From Austria: Preliminary Determination of Sales at Less Than Fair Value and Postponement of the Final Determination

AGENCY: Enforcement and Compliance, International Trade Administration, Department of Commerce.

SUMMARY: The Department of Commerce (the Department) preliminarily determines that certain carbon and alloy steel cut-to-length plate (CTL plate) from Austria is being, or is likely to be, sold in the United States at less than fair value (LTFV). The period of investigation (POI) is April 1, 2015, through March 31, 2016. The estimated weighted-average dumping margins of sales at LTFV are shown in the ''Preliminary Determination'' section of this notice. Interested parties are invited to comment on this preliminary determination.

DATES: Effective November 14, 2016.

FOR FURTHER INFORMATION CONTACT: Edythe Artman or Madeline Heeren, AD/CVD Operations, Office VI, Enforcement and Compliance, International Trade Administration, U.S. Department of Commerce, 1401 Constitution Avenue NW., Washington, DC 20230; telephone: (202) 482–3931 or (202) 482–9179, respectively.

SUPPLEMENTARY INFORMATION:

Background

The Department published the initiation of this investigation on April 28, 2016.[1] For a complete description of the events that followed the initiation of this investigation, *see* the memorandum that is dated concurrently with this determination and hereby adopted by this notice.[2] A list of topics in the Preliminary Decision Memorandum is included as Appendix II to this notice.

The Preliminary Decision Memorandum is a public document and is made available to the public *via* Enforcement and Compliance's Antidumping and Countervailing Duty Centralized Electronic Service System (ACCESS). ACCESS is available to registered users at *https://access.trade.gov,* and is available to all parties in the Department's Central Records Unit, room B8024 of the main Department of Commerce building. In addition, a complete version of the Preliminary Decision Memorandum can be accessed directly on the internet at *http://enforcement.trade.gov/frn/.* The signed Preliminary Decision Memorandum and the electronic version of the Preliminary Decision Memorandum are identical in content.

Scope of the Investigation

The product covered by this investigation is CTL plate from Austria. For a full description of the scope of this investigation, *see* the ''Scope of the Investigation,'' in Appendix I of this notice.

Scope Comments

In accordance with the *Preamble* to the Department's regulations,[3] the *Initiation Notice* set aside a period of time for parties to raise issues regarding product coverage, *i.e.,* scope.[4] Certain interested parties commented on the scope of the concurrent CTL plate investigations as it appeared in the *Initiation Notice.* For a summary of the product coverage comments and rebuttal responses submitted to the records of this and the concurrent CTL plate investigations, and a discussion and analysis of all comments timely received, *see* the Department's Preliminary Scope Decision Memorandum and the Department's Additional Preliminary Scope Decision Memorandum.[5] The Department has

[1] *See Certain Carbon and Alloy Steel Cut-To-Length Plate From Austria, Belgium, Brazil, France, the Federal Republic of Germany, Italy, Japan, the Republic of Korea, the People's Republic of China, South Africa, Taiwan, and the Republic of Turkey: Initiation of Less-Than-Fair Value Investigations,* 81 FR 27089 (May 5, 2016) (*Initiation Notice*).

[2] *See* Memorandum from Christian Marsh, Deputy Assistant Secretary for Antidumping and Countervailing Duty Operations, to Paul Piquado, Assistant Secretary for Enforcement and Compliance, entitled ''Decision Memorandum for the Preliminary Determination in the Antidumping Duty Investigation of Certain Carbon and Alloy Steel Cut-To-Length Plate From Italy'' (Preliminary Decision Memorandum), dated concurrently with this notice.

[3] *See Antidumping Duties; Countervailing Duties; Final Rule,* 62 FR 27296, 27323 (May 19, 1997) (*Preamble*).

[4] *See Initiation Notice,* 81 FR at 27090.

[5] *See* Memorandum to Christian Marsh, Deputy Assistant Secretary for Antidumping and Countervailing Duty Operations, ''Certain Carbon and Alloy Steel Cut-to-Length Plate From Austria, Belgium, Brazil, the People's Republic of China, France, the Federal Republic of Germany, Italy, Japan, the Republic of Korea, the Republic of South Africa, Taiwan, and Turkey: Scope Comments Decision Memorandum for the Preliminary Determinations,'' dated September 6, 2016 (Preliminary Scope Decision Memorandum), and Memorandum to Christian Marsh, Deputy Assistant Secretary for Antidumping and Countervailing Duty Operations, ''Certain Carbon and Alloy Steel Cut-to-Length Plate From Austria, Belgium, Brazil, the People's Republic of China, France, the Federal Republic of Germany, Italy, Japan, the Republic of Korea, the Republic of South Africa, Taiwan, and Turkey: Additional Scope Comments Preliminary Decision Memorandum and Extension of Deadlines for Scope Case Briefs and Scope Rebuttal Briefs,''

preliminarily modified the scope language as it appeared in the *Initiation Notice* to clarify the exclusion for stainless steel plate, correct two tariff numbers that were misidentified in the Petitions and in the *Initiation Notice,* and modify language pertaining to existing steel plate and hot-rolled flat-rolled steel orders.[6]

Methodology

The Department is conducting this investigation in accordance with section 731 of the Tariff Act of 1930, as amended (the Act). There is one mandatory respondent participating in this investigation. Export price and, where appropriate, constructed export price are calculated in accordance with section 772 of the Act. Normal value (NV) is calculated in accordance with section 773 of the Act. For a full description of the methodology underlying our preliminary conclusions, *see* the Preliminary Decision Memorandum.

All Others Rate

Section 735(c)(5)(A) of the Act provides that the estimated ''all others'' rate shall be an amount equal to the weighted-average of the estimated weighted-average dumping margins established for exporters and producers individually investigated, excluding any zero or *de minimis* margins, and any margins determined entirely under section 776 of the Act.

Voestalpine is the only respondent for which the Department calculated a company-specific rate.[7] Therefore, for purposes of determining the ''all others'' rate and pursuant to section 735(c)(5)(A) of the Act, we are using the estimated weighted-average dumping margin calculated for voestalpine as the all-others rate, as referenced in the ''Preliminary Determination'' section below.

Preliminary Determination

The Department preliminarily determines that CTL plate from Austria is being, or is likely to be, sold in the United States at LTFV, pursuant to section 733 of the Act, and that the following estimated weighted-average dumping margins exist:

Exporter/manufacturer	Weighted-average dumping margin (percent)
Bohler Edelstahl GmbH & Co KG; Bohler Bleche GmbH & Co KG; Bohler International GmbH; voestalpine Grobblech GmbH; voestalpine Steel Service Center GmbH	41.97
All Others	41.97

Suspension of Liquidation

In accordance with section 733(d)(2) of the Act, we will direct U.S. Customs and Border Protection (CBP) to suspend liquidation of all entries of subject merchandise from Austria, as described in Appendix I of this notice, which are entered, or withdrawn from warehouse, for consumption on or after the date of publication of this notice in the **Federal Register**, except for voestalpine, as described below.

Section 733(e)(2) of the Act provides that, given an affirmative determination of critical circumstances, any suspension of liquidation shall apply to unliquidated entries of merchandise entered, or withdrawn from warehouse, for consumption on or after the later of (a) the date which is 90 days before the date on which the suspension of liquidation was first ordered, or (b) the date on which notice of initiation of the investigation was published.

Because we have preliminarily found that critical circumstances exist with regard to imports produced and exported by the mandatory respondent voestalpine,[8] we will instruct CBP to suspend liquidation of all entries of CTL plate from Austria, as described in the scope of the investigation, from voestalpine that are entered, or withdrawn from warehouse, for consumption on or after the date that is 90 days prior to the date on which suspension of liquidation is first ordered, *e.g.,* the date of publication of this notice.

Pursuant to section 733(d) of the Act and 19 CFR 351.205(d), we will instruct CBP to require a cash deposit[9] equal to the weighted-average amount by which NV exceeds U.S. price, as indicated in the chart above, as follows: (1) The rate for the mandatory respondent listed above will be the respondent-specific rate we determined in this preliminary determination; (2) if the exporter is not a mandatory respondent identified above, but the producer is, the rate will be the specific rate established for the producer of the subject merchandise; (3) the rate for all other producers or exporters will be the all-others rate. These suspension of liquidation instructions will remain in effect until further notice.

Disclosure

We intend to disclose the calculations performed to interested parties in this proceeding within five days of the public announcement of this preliminary determination in accordance with 19 CFR 351.224(b).

Verification

As provided in section 782(i) of the Act, we intend to verify information relied upon in making our final determination.

Public Comment

Interested parties are invited to comment on this preliminary determination. Case briefs or other written comments may be submitted to the Assistant Secretary for Enforcement and Compliance no later than seven days after the date on which the final verification report is issued in this proceeding, and rebuttal briefs, limited to issues raised in case briefs, may be submitted no later than five days after the deadline date for case briefs.[10] Pursuant to 19 CFR 351.309(c)(2) and (d)(2), parties who submit case briefs or rebuttal briefs in this proceeding are encouraged to submit with each argument: (1) A statement of the issue; (2) a brief summary of the argument; and (3) a table of authorities.

The Department established separate deadlines for interested parties to provide comments on scope issues.[11]

dated October 13, 2016 (Additional Preliminary Scope Decision Memorandum), respectively.

[6] *See* Preliminary Scope Decision Memorandum at 2 and 56, and Additional Preliminary Scope Decision Memorandum at 10–11 and 20.

[7] For this preliminary determination, the Department has preliminarily determined to collapse, and treat as a single entity, Bohler Edelstahl GmbH & Co KG (BEG), Bohler Bleche GmbH & Co KG (BBG), Bohler International GmbH (BIG), voestalpine Grobblech (Grobblech), and voestalpine Steel Service Center GmbH (SSC) (collectively, voestalpine). *See* Memorandum to the File, entitled ''Certain Carbon and Alloy Steel Cut-to-Length Plate from Austria, Less-Than-Fair-Value Investigation: voestalpine Collapsing Memorandum,'' dated concurrently with this notice.

[8] *See Certain Carbon and Alloy Steel Cut-to-Length Plate From Austria, Belgium, Brazil, the Republic of Korea, Taiwan, and Turkey; Antidumping and Countervailing Duty Investigations: Preliminary Determinations of Critical Circumstances,* 81 FR 61666 (September 7, 2016).

[9] *See Modification of Regulations Regarding the Practice of Accepting Bonds During the Provisional Measures Period in Antidumping and Countervailing Duty Investigations,* 76 FR 61042 (October 3, 2011).

[10] *See* 19 CFR 351.309; *see also* 19 CFR 351.303 (for general filing requirements).

[11] *See* Preliminary Scope Decision Memorandum, Additional Preliminary Scope Decision Memorandum, and Memorandum to the File ''Deadlines for Submitting Scope Case Briefs and Scope Rebuttal Briefs,'' dated October 18, 2016 (Deadline Memo for Scope Briefs); and Memorandum to the File ''Extension of Deadline for Submitting Scope Rebuttal Briefs,'' dated October

Continued

Specifically, case briefs on scope issues were to be submitted no later than October 21, 2016. Scope rebuttal briefs, limited to issues raised in the scope case briefs, were to be submitted no later than November 1, 2016.[12] The Department explained that parties should limit comments on scope issues to their scope case brief and their scope rebuttal brief.[13] Thus, comments on scope issues belong in parties' scope case briefs and scope rebuttal briefs only and not in other case briefs and rebuttal briefs submitted in this investigation. The Department intends to address parties' scope comments in a final scope memorandum.

Pursuant to 19 CFR 351.310(c), interested parties who wish to request a hearing must submit a written request to the Assistant Secretary for Enforcement and Compliance, U.S. Department of Commerce, within 30 days after the date of publication of this notice. Requests should contain the party's name, address, and telephone number, the number of participants, and a list of the issues to be discussed. If a request for a hearing is made, the Department intends to hold the hearing at the U.S. Department of Commerce, 1401 Constitution Avenue NW., Washington, DC 20230, at a time and date to be determined. Parties should confirm by telephone the date, time, and location of the hearing two days before the scheduled date.

All documents in this investigation must be filed electronically using ACCESS. An electronically-filed request must be received successfully in its entirety by ACCESS by 5:00 p.m. Eastern Standard Time.

Postponement of Final Determination and Extension of Provisional Measures

Section 735(a)(2) of the Act provides that a final determination may be postponed until not later than 135 days after the date of the publication of the preliminary determination if, in the event of an affirmative preliminary determination, a request for such postponement is made by exporters who account for a significant proportion of exports of the subject merchandise, or in the event of a negative preliminary determination, a request for such postponement is made by the petitioner. 19 CFR 351.210(e)(2) requires that requests by respondents for postponement of a final determination be accompanied by a request for extension of provisional measures from a four-month period to a period not more than six months in duration.

Respondent voestalpine has requested that, in the event of an affirmative preliminary determination in this investigation, the Department postpone its final determination, *i.e.,* no later than 135 days after the publication of the preliminary determination in the **Federal Register**, and agreed to extend the application of the provisional measures prescribed under section 733(d) of the Act and 19 CFR 351.210(e)(2), from a four-month period to a period not to exceed six months.[14]

In accordance with section 735(a)(2)(A) of the Act and 19 CFR 351.210(b)(2)(ii), because (1) our preliminary determination is affirmative; (2) the requesting exporters account for a significant proportion of exports of the subject merchandise; and (3) no compelling reasons for denial exist, we are postponing the final determination until no later than 135 days after the publication of this notice in the **Federal Register** and extending the provisional measures from a four-month period to a period not greater than six months. Accordingly, we will issue our final determination no later than 135 days after the date of publication of this preliminary determination, pursuant to section 735(a)(2) of the Act.[15]

International Trade Commission (ITC) Notification

In accordance with section 733(f) of the Act, we are notifying the ITC of our affirmative preliminary determination of sales at LTFV. If our final determination is affirmative, the ITC will determine before the later of 120 days after the date of this preliminary determination or 45 days after our final determination whether these imports are materially injuring, or threaten material injury to, the U.S. industry.

This determination is issued and published in accordance with sections 733(f) and 777(i)(1) of the Act and 19 CFR 351.205(c).

Dated: November 4, 2016.

Paul Piquado,

Assistant Secretary for Enforcement and Compliance.

Appendix I—Scope of the Investigation

The products covered by this investigation are certain carbon and alloy steel hot-rolled or forged flat plate products not in coils, whether or not painted, varnished, or coated with plastics or other non-metallic substances (cut-to-length plate). Subject merchandise includes plate that is produced by being cut-to-length from coils or from other discrete length plate and plate that is rolled or forged into a discrete length. The products covered include (1) Universal mill plates (*i.e.,* flat-rolled products rolled on four faces or in a closed box pass, of a width exceeding 150 mm but not exceeding 1250 mm, and of a thickness of not less than 4 mm, which are not in coils and without patterns in relief), and (2) hot-rolled or forged flat steel products of a thickness of 4.75 mm or more and of a width which exceeds 150 mm and measures at least twice the thickness, and which are not in coils, whether or not with patterns in relief. The covered products described above may be rectangular, square, circular or other shapes and include products of either rectangular or non-rectangular cross-section where such non-rectangular cross-section is achieved subsequent to the rolling process, *i.e.,* products which have been ''worked after rolling'' (*e.g.,* products which have been beveled or rounded at the edges).

For purposes of the width and thickness requirements referenced above, the following rules apply:

(1) Except where otherwise stated where the nominal and actual thickness or width measurements vary, a product from a given subject country is within the scope if application of either the nominal or actual measurement would place it within the scope based on the definitions set forth above; and

(2) Where the width and thickness vary for a specific product (*e.g.,* the thickness of certain products with non-rectangular cross-section, the width of certain products with non-rectangular shape, *etc.*), the measurement at its greatest width or thickness applies.

Steel products included in the scope of this investigation are products in which: (1) Iron predominates, by weight, over each of the other contained elements; and (2) the carbon content is 2 percent or less by weight.

Subject merchandise includes cut-to-length plate that has been further processed in the subject country or a third country, including but not limited to pickling, oiling, levelling, annealing, tempering, temper rolling, skin passing, painting, varnishing, trimming, cutting, punching, beveling, and/or slitting, or any other processing that would not otherwise remove the merchandise from the scope of the investigation if performed in the country of manufacture of the cut-to-length plate.

All products that meet the written physical description, are within the scope of this investigation unless specifically excluded or covered by the scope of an existing order. The following products are outside of, and/or specifically excluded from, the scope of this investigation:

(1) products clad, plated, or coated with metal, whether or not painted, varnished or coated with plastic or other non-metallic substances;

(2) military grade armor plate certified to one of the following specifications or to a specification that references and incorporates one of the following specifications:

28, 2016 (Extension Memo for Scope Rebuttal Briefs).

[12] *See* Deadline Memo for Scope Briefs and Extension Memo for Scope Rebuttal Briefs.

[13] *See e.g.,* Deadline Memo for Scope Briefs.

[14] *See* letter from voestalpine entitled, ''Antidumping Duty Investigation of Certain Carbon and Alloy Steel Cut-To-Length Plate From Austria: Request to Postpone Final Determination,'' dated October 24, 2016.

[15] *See* 19 CFR 351.210(b)(2) and (e).

- MIL–A–12560,
- MIL–DTL–12560H,
- MIL–DTL–12560J,
- MIL–DTL–12560K,
- MIL–DTL–32332,
- MIL–A–46100D,
- MIL–DTL–46100–E,
- MIL–46177C,
- MIL–S–16216K Grade HY80,
- MIL–S–16216K Grade HY100,
- MIL–S–24645A HSLA–80;
- MIL–S–24645A HSLA–100,
- T9074–BD–GIB–010/0300 Grade HY80,
- T9074–BD–GIB–010/0300 Grade HY100,
- T9074–BD–GIB–010/0300 Grade HSLA80,
- T9074–BD–GIB–010/0300 Grade HSLA100, and
- T9074–BD–GIB–010/0300 Mod. Grade HSLA115,

except that any cut-to-length plate certified to one of the above specifications, or to a military grade armor specification that references and incorporates one of the above specifications, will not be excluded from the scope if it is also dual- or multiple-certified to any other non-armor specification that otherwise would fall within the scope of this order;

(3) stainless steel plate, containing 10.5 percent or more of chromium by weight and not more than 1.2 percent of carbon by weight;

(4) CTL plate meeting the requirements of ASTM A–829, Grade E 4340 that are over 305 mm in actual thickness;

(5) Alloy forged and rolled CTL plate greater than or equal to 152.4 mm in actual thickness meeting each of the following requirements:

(a) Electric furnace melted, ladle refined & vacuum degassed and having a chemical composition (expressed in weight percentages):

- Carbon 0.23–0.28,
- Silicon 0.05–0.20,
- Manganese 1.20–1.60,
- Nickel not greater than 1.0,
- Sulfur not greater than 0.007,
- Phosphorus not greater than 0.020,
- Chromium 1.0–2.5,
- Molybdenum 0.35–0.80,
- Boron 0.002–0.004,
- Oxygen not greater than 20 ppm,
- Hydrogen not greater than 2 ppm, and
- Nitrogen not greater than 60 ppm;

(b) With a Brinell hardness measured in all parts of the product including mid thickness falling within one of the following ranges:

(i) 270–300 HBW,

(ii) 290–320 HBW, or

(iii) 320–350HBW;

(c) Having cleanliness in accordance with ASTM E45 method A (Thin and Heavy): A not exceeding 1.5, B not exceeding 1.0, C not exceeding 0.5, D not exceeding 1.5; and

(d) Conforming to ASTM A578–S9 ultrasonic testing requirements with acceptance criteria 2 mm flat bottom hole;

(6) Alloy forged and rolled steel CTL plate over 407 mm in actual thickness and meeting the following requirements:

(a) Made from Electric Arc Furnace melted, Ladle refined & vacuum degassed, alloy steel with the following chemical composition (expressed in weight percentages):

- Carbon 0.23–0.28,
- Silicon 0.05–0.15,
- Manganese 1.20–1.50,
- Nickel not greater than 0.4,
- Sulfur not greater than 0.010,
- Phosphorus not greater than 0.020,
- Chromium 1.20–1.50,
- Molybdenum 0.35–0.55,
- Boron 0.002–0.004,
- Oxygen not greater than 20 ppm,
- Hydrogen not greater than 2 ppm, and
- Nitrogen not greater than 60 ppm;

(b) Having cleanliness in accordance with ASTM E45 method A (Thin and Heavy): A not exceeding 1.5, B not exceeding 1.5, C not exceeding 1.0, D not exceeding 1.5;

(c) Having the following mechanical properties:

(i) With a Brinell hardness not more than 237 HBW measured in all parts of the product including mid thickness; and having a Yield Strength of 75ksi min and UTS 95ksi or more, Elongation of 18% or more and Reduction of area 35% or more; having charpy V at −75 degrees F in the longitudinal direction equal or greater than 15 ft. lbs (single value) and equal or greater than 20 ft. lbs (average of 3 specimens) and conforming to the requirements of NACE MR01–75; or

(ii) With a Brinell hardness not less than 240 HBW measured in all parts of the product including mid thickness; and having a Yield Strength of 90 ksi min and UTS 110 ksi or more, Elongation of 15% or more and Reduction of area 30% or more; having charpy V at −40 degrees F in the longitudinal direction equal or greater than 21 ft. lbs (single value) and equal or greater than 31 ft. lbs (average of 3 specimens);

(d) Conforming to ASTM A578–S9 ultrasonic testing requirements with acceptance criteria 3.2 mm flat bottom hole; and

(e) Conforming to magnetic particle inspection in accordance with AMS 2301;

(7) Alloy forged and rolled steel CTL plate over 407 mm in actual thickness and meeting the following requirements:

(a) Made from Electric Arc Furnace melted, ladle refined & vacuum degassed, alloy steel with the following chemical composition (expressed in weight percentages):

- Carbon 0.25–0.30,
- Silicon not greater than 0.25,
- Manganese not greater than 0.50,
- Nickel 3.0–3.5,
- Sulfur not greater than 0.010,
- Phosphorus not greater than 0.020,
- Chromium 1.0–1.5,
- Molybdenum 0.6–0.9,
- Vanadium 0.08 to 0.12
- Boron 0.002–0.004,
- Oxygen not greater than 20 ppm,
- Hydrogen not greater than 2 ppm, and
- Nitrogen not greater than 60 ppm.

(b) Having cleanliness in accordance with ASTM E45 method A (Thin and Heavy): A not exceeding 1.0(t) and 0.5(h), B not exceeding 1.5(t) and 1.0(h), C not exceeding 1.0(t) and 0.5(h), and D not exceeding 1.5(t) and 1.0(h);

(c) Having the following mechanical properties: A Brinell hardness not less than 350 HBW measured in all parts of the product including mid thickness; and having a Yield Strength of 145ksi or more and UTS 160ksi or more, Elongation of 15% or more and Reduction of area 35% or more; having charpy V at −40 degrees F in the transverse direction equal or greater than 20 ft. lbs (single value) and equal or greater than 25 ft. lbs (average of 3 specimens);

(d) Conforming to ASTM A578–S9 ultrasonic testing requirements with acceptance criteria 3.2 mm flat bottom hole; and

(e) Conforming to magnetic particle inspection in accordance with AMS 2301.

The products subject to the investigation are currently classified in the Harmonized Tariff Schedule of the United States (HTSUS) under item numbers: 7208.40.3030, 7208.40.3060, 7208.51.0030, 7208.51.0045, 7208.51.0060, 7208.52.0000, 7211.13.0000, 7211.14.0030, 7211.14.0045, 7225.40.1110, 7225.40.1180, 7225.40.3005, 7225.40.3050, 7226.20.0000, and 7226.91.5000.

The products subject to the investigation may also enter under the following HTSUS item numbers: 7208.40.6060, 7208.53.0000, 7208.90.0000, 7210.70.3000, 7210.90.9000, 7211.19.1500, 7211.19.2000, 7211.19.4500, 7211.19.6000, 7211.19.7590, 7211.90.0000, 7212.40.1000, 7212.40.5000, 7212.50.0000, 7214.10.0000, 7214.30.0010, 7214.30.0080, 7214.91.0015, 7214.91.0060, 7214.91.0090, 7225.11.0000, 7225.19.0000, 7225.40.5110, 7225.40.5130, 7225.40.5160, 7225.40.7000, 7225.99.0010, 7225.99.0090, 7226.11.1000, 7226.11.9060, 7226.19.1000, 7226.19.9000, 7226.91.0500, 7226.91.1530, 7226.91.1560, 7226.91.2530, 7226.91.2560, 7226.91.7000, 7226.91.8000, and 7226.99.0180.

The HTSUS subheadings above are provided for convenience and customs purposes only. The written description of the scope of the investigation is dispositive.

Appendix II—List of Topics Discussed in the Preliminary Decision Memorandum

1. Summary
2. Background
3. Period of Investigation
4. Preliminary Determination of Critical Circumstances
5. Scope Comments
6. Affiliation and Collapsing of Affiliates
7. Discussion of the Methodology
   a. Determination of Comparison Method
   b. Results of the Differential Pricing Analysis
8. Product Comparisons
9. Date of Sale
10. Export Price/Constructed Export Price
11. Normal Value
   a. Home Market Viability
   b. Affiliated Party Transactions and Arm's Length Test
   c. Level of Trade
   d. Cost of Production Analysis
   1. Calculation of COP
   2. Test of Comparison Market Sales Prices
   4. Results of the COP Test
   e. Calculation of NV Based on Comparison-Market Prices
11. Currency Conversion
12. Conclusion

[FR Doc. 2016–27305 Filed 11–10–16; 8:45 am]

BILLING CODE 3510–DS–P

DEPARTMENT OF COMMERCE

International Trade Administration

[A–583–858]

Certain Carbon and Alloy Steel Cut-to-Length Plate From Taiwan: Preliminary Determination of Sales at Less Than Fair Value

AGENCY: Enforcement and Compliance, International Trade Administration, Department of Commerce.

SUMMARY: The Department of Commerce (the Department) preliminarily determines that certain carbon and alloy steel cut-to-length plate (CTL plate) from Taiwan is being, or is likely to be, sold in the United States at less than fair value (LTFV). The period of investigation (POI) is April 1, 2015, through March 31, 2016. The estimated weighted-average dumping margins of sales at LTFV are shown in the ''Preliminary Determination'' section of this notice. Interested parties are invited to comment on this preliminary determination.

DATES: Effective November 14, 2016.

FOR FURTHER INFORMATION CONTACT: Davina Friedmann or Tyler Weinhold, AD/CVD Operations, Office VI, Enforcement and Compliance, International Trade Administration, U.S. Department of Commerce, 1401 Constitution Avenue NW., Washington, DC 20230; telephone: (202) 482–0698 or (202) 482–1121, respectively.

SUPPLEMENTARY INFORMATION:

Background

The Department initiated this investigation on April 28, 2016.[1] We selected two mandatory respondents in this investigation, China Steel Corporation (China Steel) and Shang Chen Steel Co., Ltd. (Shang Chen). For a complete description of the events that followed the initiation of this investigation, *see* the memorandum that is dated concurrently with this determination and hereby adopted by this notice.[2] A list of topics in the Preliminary Decision Memorandum is included as Appendix II to this notice.

The Preliminary Decision Memorandum is a public document and is made available to the public via Enforcement and Compliance's Antidumping and Countervailing Duty Centralized Electronic Service System (ACCESS). ACCESS is available to registered users at *https://access.trade.gov,* and is available to all parties in the Department's Central Records Unit, room B8024 of the main Department of Commerce building. In addition, a complete version of the Preliminary Decision Memorandum can be accessed directly on the internet at *http://enforcement.trade.gov/frn/.* The signed Preliminary Decision Memorandum and the electronic version of the Preliminary Decision Memorandum are identical in content.

Scope of the Investigation

The product covered by this investigation is CTL plate from Taiwan. For a full description of the scope of this investigation, *see* the ''Scope of the Investigation,'' in Appendix I of this notice.

Scope Comments

In accordance with the *Preamble* to the Department's regulations,[3] the *Initiation Notice* set aside a period of time for parties to raise issues regarding product coverage, *i.e.,* scope.[4] Certain interested parties commented on the scope of the concurrent CTL plate investigations as it appeared in the *Initiation Notice.* For a summary of the product coverage comments and rebuttal responses submitted to the records of this and the concurrent CTL plate investigations, and a discussion and analysis of all comments timely received, *see* the Department's Preliminary Scope Decision Memorandum and the Department's Additional Preliminary Scope Decision Memorandum.[5] The Department has preliminarily modified the scope language as it appeared in the *Initiation Notice* to clarify the exclusion for stainless steel plate, corrected two tariff numbers that were misidentified in the Petitions and in the *Initiation Notice,* and modified language pertaining to existing steel plate and hot-rolled flat-rolled steel orders.[6]

Methodology

The Department is conducting this investigation in accordance with section 731 of the Act. Export price is calculated in accordance with section 772 of the Tariff Act of 1930, as amended (the Act). Normal value (NV) is calculated in accordance with section 773 of the Act.[7] For a full description of the methodology underlying our preliminary conclusions, *see* the Preliminary Decision Memorandum.

Adverse Facts Available

Because mandatory respondent China Steel failed to cooperate to the best of its ability in responding to the Department's questionnaires, we preliminarily determine to use adverse facts available (AFA) with respect to this respondent, in accordance with sections 776(a) and (b) of the Act and 19 CFR 351.308. For further discussion, *see* the Preliminary Decision Memorandum.

All-Others Rate

Consistent with sections 733(d)(1)(A)(ii) and 735(c)(5) of the Act, the Department also calculated an estimated all-others rate. Section 735(c)(5)(A) of the Act provides that the estimated all-others rate shall be an amount equal to the weighted average of the estimated weighted-average dumping margins established for exporters and producers individually investigated, excluding any zero and *de minimis* margins, and any margins determined entirely under section 776 of the Act.

In this investigation, because the margin for China Steel was determined entirely under section 776 of the Act, and hence, because Shang Chen was the only respondent for which we calculated a weighted-average dumping margin, we based our determination of the all-others rate on the estimated

[1] *See Certain Carbon and Alloy Steel Cut-To-Length Plate From Austria, Belgium, Brazil, France, the Federal Republic of Germany, Italy, Japan, the Republic of Korea, the People's Republic of China, South Africa, Taiwan, and the Republic of Turkey: Initiation of Less-Than-Fair Value Investigations,* 81 FR 27089 (May 5, 2016) (*Initiation Notice*).

[2] *See* Memorandum from Christian Marsh, Deputy Assistant Secretary for Antidumping and Countervailing Duty Operations, to Paul Piquado, Assistant Secretary for Enforcement and Compliance, entitled ''Decision Memorandum for the Preliminary Determination in the Antidumping Duty Investigation of Certain Carbon and Alloy Steel Cut-To-Length Plate From Taiwan'' (Preliminary Decision Memorandum), dated concurrently with this notice.

[3] *See Antidumping Duties; Countervailing Duties; Final rule,* 62 FR 27296, 27323 (May 19, 1997) (*Preamble*).

[4] *See Initiation Notice,* 81 FR at 27090.

[5] *See* Memorandum to Christian Marsh, Deputy Assistant Secretary for Antidumping and Countervailing Duty Operations, ''Certain Carbon and Alloy Steel Cut-to-Length Plate From Austria, Belgium, Brazil, the People's Republic of China, France, the Federal Republic of Germany, Italy, Japan, the Republic of Korea, the Republic of South Africa, Taiwan, and Turkey: Scope Comments Decision Memorandum for the Preliminary Determinations,'' dated September 6, 2016 (Preliminary Scope Decision Memorandum), and Memorandum to Christian Marsh, Deputy Assistant Secretary for Antidumping and Countervailing Duty Operations, ''Certain Carbon and Alloy Steel Cut-to-Length Plate From Austria, Belgium, Brazil, the People's Republic of China, France, the Federal Republic of Germany, Italy, Japan, the Republic of Korea, the Republic of South Africa, Taiwan, and Turkey: Additional Scope Comments Preliminary Decision Memorandum and Extension of Deadlines for Scope Case Briefs and Scope Rebuttal Briefs,'' dated October 13, 2016 (Additional Preliminary Scope Decision Memorandum), respectively.

[6] *See* Preliminary Scope Decision Memorandum at 2 and 56, and Additional Preliminary Scope Decision Memorandum at 10–11 and 20.

[7] We have determined that Shang Chen does not have Constructed Export Price (CEP) sales.

weighted-average dumping margin calculated for Shang Chen.[8]

Preliminary Determination

The Department preliminarily determines that CTL plate from Taiwan is being, or is likely to be, sold in the United States at LTFV, pursuant to section 733 of the Act, and that the following estimated weighted-average dumping margins exist:

Exporter/manufacturer	Weighted-average dumping margin (percent)
China Steel Corporation	28.00
Shang Chen Steel Co., Ltd	3.51
All Others	3.51

Suspension of Liquidation

In accordance with section 733(d)(2) of the Act, we will direct U.S. Customs and Border Protection (CBP) to suspend liquidation of all entries of CTL plate from Taiwan, as described in the Scope of the Investigation in Appendix I, from Shang Chen that are entered, or withdrawn from warehouse, for consumption on or after the date of publication of this notice in the **Federal Register**.

Section 733(e)(2) of the Act provides that, given an affirmative preliminary determination of critical circumstances, any suspension of liquidation shall apply to unliquidated entries of merchandise entered, or withdrawn from warehouse, for consumption on or after the later of (a) the date which is 90 days before the date on which the suspension of liquidation was first ordered, or (b) the date on which notice of initiation of the investigation was published.

Because we have preliminarily found that critical circumstances exist with regard to imports produced and exported by China Steel and ''all other'' companies,[9] we will instruct CBP to suspend liquidation of all entries of CTL plate from Taiwan, as described in the scope of the investigation, from China Steel and the ''all other'' companies that are entered, or withdrawn from warehouse, for consumption on or after the date that is 90 days prior to the date on which suspension of liquidation is first ordered (*e.g.,* the date of publication of this notice).

Pursuant to section 733(d) of the Act and 19 CFR 351.205(d), we will instruct CBP to require cash deposits [10] equal to the weighted-average amount by which the NV exceeds U.S. price, as indicated in the chart above, as follows: (1) The rate for the mandatory respondents listed above will be the respondent-specific rates we determined in this preliminary determination; (2) if the exporter is not a mandatory respondent identified above, but the producer is, the rate will be the specific rate established for the producer of the subject merchandise; and (3) the rate for all other producers or exporters will be the all-others rate. The suspension of liquidation instructions will remain in effect until further notice.

Disclosure

We intend to disclose the calculations performed to interested parties in this proceeding within five days of the date of publication of this notice in accordance with 19 CFR 351.224(b).

Verification

As provided in section 782(i) of the Act, we intend to verify information relied upon in making our final determination.

Public Comment

Interested parties are invited to comment on this preliminary determination. Case briefs or other written comments may be submitted to the Assistant Secretary for Enforcement and Compliance no later than seven days after the date on which the final verification report is issued in this proceeding, and rebuttal briefs, limited to issues raised in case briefs, may be submitted no later than five days after the deadline date for case briefs.[11] Pursuant to 19 CFR 351.309(c)(2) and (d)(2), parties who submit case briefs or rebuttal briefs in this proceeding are encouraged to submit with each argument: (1) A statement of the issue; (2) a brief summary of the argument; and (3) a table of authorities.

The Department established separate deadlines for interested parties to provide comments on scope issues.[12] Specifically, case briefs on scope issues were to be submitted no later than October 21, 2016. Scope rebuttal briefs, limited to issues raised in the scope case briefs, were to be submitted no later than November 1, 2016.[13] The Department explained that parties should limit comments on scope issues to their scope case brief and their scope rebuttal brief.[14] Thus, comments on scope issues belong in parties' scope case briefs and scope rebuttal briefs only and not in other case briefs and rebuttal briefs submitted in this investigation. The Department intends to address parties' scope comments in a final scope memorandum.

Pursuant to 19 CFR 351.310(c), interested parties who wish to request a hearing must submit a written request to the Assistant Secretary for Enforcement and Compliance, U.S. Department of Commerce, within 30 days after the date of publication of this notice. Requests should contain the party's name, address, and telephone number, the number of participants, and a list of the issues to be discussed. If a request for a hearing is made, the Department intends to hold the hearing at the U.S. Department of Commerce, 1401 Constitution Avenue NW., Washington, DC 20230, at a time and date to be determined. Parties should confirm by telephone the date, time, and location of the hearing two days before the scheduled date.

All documents must be filed electronically using ACCESS. An electronically-filed request must be received successfully in its entirety by ACCESS by 5:00 p.m. Eastern Standard Time.

Postponement of Final Determination and Extension of Provisional Measures

Section 735(a)(2) of the Act provides that a final determination may be postponed until not later than 135 days after the date of the publication of the preliminary determination if, in the event of an affirmative preliminary determination, a request for such postponement is made by exporters who account for a significant proportion of exports of the subject merchandise, or in the event of a negative preliminary determination, a request for such postponement is made by the petitioner. 19 CFR 351.210(e)(2) requires that requests by respondents for

[8] *See, e.g., Welded Line Pipe From the Republic of Turkey: Final Determination of Sales at Less Than Fair Value,* 80 FR 61362, 61363 (October 13, 2015).

[9] *See Certain Carbon and Alloy Steel Cut-to-Length Plate From Austria, Belgium, Brazil, the Republic of Korea, Taiwan, and Turkey; Antidumping and Countervailing Duty Investigations: Preliminary Determinations of Critical Circumstances,* 81 FR 61666 (September 7, 2016).

[10] *See Modification of Regulations Regarding the Practice of Accepting Bonds During the Provisional Measures Period in Antidumping and Countervailing Duty Investigations,* 76 FR 61042 (October 3, 2011).

[11] *See* 19 CFR 351.309; *see also* 19 CFR 351.303 (for general filing requirements).

[12] *See* Preliminary Scope Decision Memorandum; Additional Preliminary Scope Decision Memorandum; Memorandum to the File ''Deadlines for Submitting Scope Case Briefs and Scope Rebuttal Briefs,'' dated October 18, 2016 (''Deadline Memo for Scope Briefs''); and Memorandum to the File regarding, ''Extension of Deadline for Submitting Scope Rebuttal Briefs,'' dated October 28, 2016 (''Extension Memo for Scope Rebuttal Briefs'').

[13] *See* Deadline Memo for Scope Briefs and Extension Memo for Scope Rebuttal Briefs.

[14] *See, e.g.,* Deadline Memo for Scope Briefs.

postponement of a final determination be accompanied by a request for extension of provisional measures from a four-month period to a period not more than six months in duration.

Respondents China Steel and Shang Chen have requested that, in the event of an affirmative preliminary determination in this investigation, the Department postpone its final determination, *i.e.,* no later than 135 days after the publication of the preliminary determination in the **Federal Register**, and agreed to extend the application of the provisional measures prescribed under section 733(d) of the Act and 19 CFR 351.210(e)(2), from a four-month period to a period not to exceed six months.[15]

In accordance with section 735(a)(2)(A) of the Act and 19 CFR 351.210(b)(2)(ii), because (1) our preliminary determination is affirmative; (2) the requesting exporters account for a significant proportion of exports of the subject merchandise; and (3) no compelling reasons for denial exist, we are postponing the final determination until no later than 135 days after the publication of this notice in the **Federal Register** and extending the provisional measures from a four-month period to a period not greater than six months. Accordingly, we will issue our final determination no later than 135 days after the date of publication of this preliminary determination, pursuant to section 735(a)(2) of the Act.[16]

International Trade Commission (ITC) Notification

In accordance with section 733(f) of the Act, we are notifying the ITC of our affirmative preliminary determination of sales at LTFV. If our final determination is affirmative, the ITC will determine before the later of 120 days after the date of this preliminary determination or 45 days after our final determination whether these imports are materially injuring, or threaten material injury to, the U.S. industry.

This determination is issued and published in accordance with sections 733(f) and 777(i)(1) of the Act and 19 CFR 351.205(c).

Dated: November 4, 2016.

Paul Piquado,

Assistant Secretary for Enforcement and Compliance.

Appendix I—Scope of the Investigation

The products covered by this investigation are certain carbon and alloy steel hot-rolled or forged flat plate products not in coils, whether or not painted, varnished, or coated with plastics or other non-metallic substances (cut-to-length plate). Subject merchandise includes plate that is produced by being cut-to-length from coils or from other discrete length plate and plate that is rolled or forged into a discrete length. The products covered include (1) Universal mill plates (*i.e.,* flat-rolled products rolled on four faces or in a closed box pass, of a width exceeding 150 mm but not exceeding 1250 mm, and of a thickness of not less than 4 mm, which are not in coils and without patterns in relief), and (2) hot-rolled or forged flat steel products of a thickness of 4.75 mm or more and of a width which exceeds 150 mm and measures at least twice the thickness, and which are not in coils, whether or not with patterns in relief. The covered products described above may be rectangular, square, circular or other shapes and include products of either rectangular or non-rectangular cross-section where such non-rectangular cross-section is achieved subsequent to the rolling process, *i.e.,* products which have been ''worked after rolling'' (*e.g.,* products which have been beveled or rounded at the edges).

For purposes of the width and thickness requirements referenced above, the following rules apply:

(1) Except where otherwise stated where the nominal and actual thickness or width measurements vary, a product from a given subject country is within the scope if application of either the nominal or actual measurement would place it within the scope based on the definitions set forth above unless the product is already covered by an order existing on that specific country (*i.e., Notice of Antidumping Duty Order; Certain Hot-Rolled Carbon Steel Flat Products From Taiwan,* 66 FR 59563 (November 29, 2001).); and

(2) where the width and thickness vary for a specific product (*e.g.,* the thickness of certain products with non-rectangular cross-section, the width of certain products with non-rectangular shape, *etc.*), the measurement at its greatest width or thickness applies.

Steel products included in the scope of this investigation are products in which:

(1) Iron predominates, by weight, over each of the other contained elements; and

(2) the carbon content is 2 percent or less by weight.

Subject merchandise includes cut-to-length plate that has been further processed in the subject country or a third country, including but not limited to pickling, oiling, levelling, annealing, tempering, temper rolling, skin passing, painting, varnishing, trimming, cutting, punching, beveling, and/or slitting, or any other processing that would not otherwise remove the merchandise from the scope of the investigation if performed in the country of manufacture of the cut-to-length plate.

All products that meet the written physical description, are within the scope of this investigation unless specifically excluded or covered by the scope of an existing order. The following products are outside of, and/or specifically excluded from, the scope of this investigation:

(1) Products clad, plated, or coated with metal, whether or not painted, varnished or coated with plastic or other non-metallic substances;

(2) military grade armor plate certified to one of the following specifications or to a specification that references and incorporates one of the following specifications:

- MIL–A–12560,
- MIL–DTL–12560H,
- MIL–DTL–12560J,
- MIL–DTL–12560K,
- MIL–DTL–32332,
- MIL–A–46100D,
- MIL–DTL–46100–E,
- MIL–46177C,
- MIL–S–16216K Grade HY80,
- MIL–S–16216K Grade HY100,
- MIL–S–24645A HSLA–80;
- MIL–S–24645A HSLA–100,
- T9074–BD–GIB–010/0300 Grade HY80,
- T9074–BD–GIB–010/0300 Grade HY100,
- T9074–BD–GIB–010/0300 Grade HSLA80,
- T9074–BD–GIB–010/0300 Grade HSLA100, and
- T9074–BD–GIB–010/0300 Mod. Grade HSLA115,

except that any cut-to-length plate certified to one of the above specifications, or to a military grade armor specification that references and incorporates one of the above specifications, will not be excluded from the scope if it is also dual- or multiple-certified to any other non-armor specification that otherwise would fall within the scope of this order;

(3) stainless steel plate, containing 10.5 percent or more of chromium by weight and not more than 1.2 percent of carbon by weight;

(4) CTL plate meeting the requirements of ASTM A–829, Grade E 4340 that are over 305 mm in actual thickness;

(5) Alloy forged and rolled CTL plate greater than or equal to 152.4 mm in actual thickness meeting each of the following requirements:

(a) Electric furnace melted, ladle refined & vacuum degassed and having a chemical composition (expressed in weight percentages):

- Carbon 0.23–0.28,
- Silicon 0.05–0.20,
- Manganese 1.20–1.60,
- Nickel not greater than 1.0,
- Sulfur not greater than 0.007,
- Phosphorus not greater than 0.020,
- Chromium 1.0–2.5,
- Molybdenum 0.35–0.80,
- Boron 0.002–0.004,
- Oxygen not greater than 20 ppm,
- Hydrogen not greater than 2 ppm, and
- Nitrogen not greater than 60 ppm;

(b) With a Brinell hardness measured in all parts of the product including mid thickness falling within one of the following ranges:

[15] *See* letters from China Steel and Shang Chen regarding, ''Certain Carbon and Alloy Steel Cut-to-Length Plate From Taiwan—Request for Extension of the Deadline for the Department's Final Determination,'' dated October 31, 2016.

[16] *See* 19 CFR 351.210(b)(2) and (e).

(i) 270–300 HBW,
(ii) 290–320 HBW, or
(iii) 320–350 HBW;
(c) Having cleanliness in accordance with ASTM E45 method A (Thin and Heavy): A not exceeding 1.5, B not exceeding 1.0, C not exceeding 0.5, D not exceeding 1.5; and
(d) Conforming to ASTM A578–S9 ultrasonic testing requirements with acceptance criteria 2 mm flat bottom hole;
(6) Alloy forged and rolled steel CTL plate over 407 mm in actual thickness and meeting the following requirements:
(a) Made from Electric Arc Furnace melted, Ladle refined & vacuum degassed, alloy steel with the following chemical composition (expressed in weight percentages):
- Carbon 0.23–0.28,
- Silicon 0.05–0.15,
- Manganese 1.20–1.50,
- Nickel not greater than 0.4,
- Sulfur not greater than 0.010,
- Phosphorus not greater than 0.020,
- Chromium 1.20–1.50,
- Molybdenum 0.35–0.55,
- Boron 0.002–0.004,
- Oxygen not greater than 20 ppm,
- Hydrogen not greater than 2 ppm, and
- Nitrogen not greater than 60 ppm;

(b) Having cleanliness in accordance with ASTM E45 method A (Thin and Heavy): A not exceeding 1.5, B not exceeding 1.5, C not exceeding 1.0, D not exceeding 1.5;
(c) Having the following mechanical properties:
(i) With a Brinell hardness not more than 237 HBW measured in all parts of the product including mid thickness; and having a Yield Strength of 75ksi min and UTS 95ksi or more, Elongation of 18% or more and Reduction of area 35% or more; having charpy V at −75 degrees F in the longitudinal direction equal or greater than 15 ft. lbs (single value) and equal or greater than 20 ft. lbs (average of 3 specimens) and conforming to the requirements of NACE MR01–75; or
(ii) With a Brinell hardness not less than 240 HBW measured in all parts of the product including mid thickness; and having a Yield Strength of 90 ksi min and UTS 110 ksi or more, Elongation of 15% or more and Reduction of area 30% or more; having charpy V at −40 degrees F in the longitudinal direction equal or greater than 21 ft. lbs (single value) and equal or greater than 31 ft. lbs (average of 3 specimens);
(d) Conforming to ASTM A578–S9 ultrasonic testing requirements with acceptance criteria 3.2 mm flat bottom hole; and
(e) Conforming to magnetic particle inspection in accordance with AMS 2301;
(7) Alloy forged and rolled steel CTL plate over 407 mm in actual thickness and meeting the following requirements:
(a) Made from Electric Arc Furnace melted, ladle refined & vacuum degassed, alloy steel with the following chemical composition (expressed in weight percentages):
- Carbon 0.25–0.30,
- Silicon not greater than 0.25,
- Manganese not greater than 0.50,
- Nickel 3.0–3.5,
- Sulfur not greater than 0.010,
- Phosphorus not greater than 0.020,
- Chromium 1.0–1.5,
- Molybdenum 0.6–0.9,
- Vanadium 0.08 to 0.12
- Boron 0.002–0.004,
- Oxygen not greater than 20 ppm,
- Hydrogen not greater than 2 ppm, and
- Nitrogen not greater than 60 ppm.

(b) Having cleanliness in accordance with ASTM E45 method A (Thin and Heavy): A not exceeding 1.0(t) and 0.5(h), B not exceeding 1.5(t) and 1.0(h), C not exceeding 1.0(t) and 0.5(h), and D not exceeding 1.5(t) and 1.0(h);
(c) Having the following mechanical properties: A Brinell hardness not less than 350 HBW measured in all parts of the product including mid thickness; and having a Yield Strength of 145ksi or more and UTS 160ksi or more, Elongation of 15% or more and Reduction of area 35% or more; having charpy V at −40 degrees F in the transverse direction equal or greater than 20 ft. lbs (single value) and equal or greater than 25 ft. lbs (average of 3 specimens);
(d) Conforming to ASTM A578–S9 ultrasonic testing requirements with acceptance criteria 3.2 mm flat bottom hole; and
(e) Conforming to magnetic particle inspection in accordance with AMS 2301.

The products subject to the investigation are currently classified in the Harmonized Tariff Schedule of the United States (HTSUS) under item numbers: 7208.40.3030, 7208.40.3060, 7208.51.0030, 7208.51.0045, 7208.51.0060, 7208.52.0000, 7211.13.0000, 7211.14.0030, 7211.14.0045, 7225.40.1110, 7225.40.1180, 7225.40.3005, 7225.40.3050, 7226.20.0000, and 7226.91.5000.

The products subject to the investigation may also enter under the following HTSUS item numbers: 7208.40.6060, 7208.53.0000, 7208.90.0000, 7210.70.3000, 7210.90.9000, 7211.19.1500, 7211.19.2000, 7211.19.4500, 7211.19.6000, 7211.19.7590, 7211.90.0000, 7212.40.1000, 7212.40.5000, 7212.50.0000, 7214.10.0000, 7214.30.0010, 7214.30.0080, 7214.91.0015, 7214.91.0060, 7214.91.0090, 7225.11.0000, 7225.19.0000, 7225.40.5110, 7225.40.5130, 7225.40.5160, 7225.40.7000, 7225.99.0010, 7225.99.0090, 7226.11.1000, 7226.11.9060, 7226.19.1000, 7226.19.9000, 7226.91.0500, 7226.91.1530, 7226.91.1560, 7226.91.2530, 7226.91.2560, 7226.91.7000, 7226.91.8000, and 7226.99.0180.

The HTSUS subheadings above are provided for convenience and customs purposes only. The written description of the scope of the investigation is dispositive.

Appendix II—List of Topics Discussed in the Preliminary Decision Memorandum

1. Summary
2. Background
3. Period of Investigation
4. Preliminary Determination of Critical Circumstances
5. Postponement of Final Determination and Extension of Provisional Measures
6. Scope Comments
7. Affiliation and Collapsing
8. Discussion of the Methodology
   a. Determination of Comparison Method
   b. Results of the Differential Pricing Analysis
9. Date of Sale
10. Product Comparisons
11. Export Price/Constructed Export Price
12. Normal Value
   a. Home Market Viability
   b. Affiliated-Party Transactions and Arm's-Length Test
   c. Level of Trade
   d. Cost of Production Analysis
1. Calculation of COP
2. Test of Comparison-Market Sales Prices
3. Results of the COP Test
   e. Calculation of NV Based on Comparison-Market Prices
11. Application of Facts Available and Use of Adverse Inferences
   a. Use of Adverse Inference
   b. Application of Facts Available with an Adverse Inference
   c. Selection of the AFA Rate
12. Currency Conversion
13. Conclusion

[FR Doc. 2016–27306 Filed 11–10–16; 8:45 am]

BILLING CODE 3510–DS–P

DEPARTMENT OF COMMERCE

International Trade Administration

[A–475–834]

Certain Carbon and Alloy Steel Cut-To-Length Plate From Italy: Preliminary Determination of Sales at Less Than Fair Value, Affirmative Determination of Critical Circumstances, and Postponement of Final Determination

AGENCY: Enforcement and Compliance, International Trade Administration, Department of Commerce.

SUMMARY: The Department of Commerce (the Department) preliminarily determines that certain carbon and alloy steel cut-to-length plate (CTL plate) from Italy is being, or is likely to be, sold in the United States at less than fair value (LTFV). The period of investigation (POI) is April 1, 2015, through March 31, 2016. The estimated weighted-average dumping margins of sales at LTFV are shown in the ''Preliminary Determination'' section of this notice. Interested parties are invited to comment on this preliminary determination.

DATES: Effective November 14, 2016

FOR FURTHER INFORMATION CONTACT: Alice Maldonado or Blaine Wiltse, AD/CVD Operations, Office II, Enforcement and Compliance, International Trade Administration, U.S. Department of Commerce, 1401 Constitution Avenue NW., Washington, DC 20230; telephone: (202) 482–4682 or (202) 482–6345, respectively.

SUPPLEMENTARY INFORMATION:

Background

The Department initiated this investigation on April 28, 2016.[1] For a complete description of the events that followed the initiation of this investigation, *see* the memorandum that is dated concurrently with this determination and hereby adopted by this notice.[2] A list of topics in the Preliminary Decision Memorandum is included as Appendix II to this notice.

The Preliminary Decision Memorandum is a public document and is made available to the public via Enforcement and Compliance's Antidumping and Countervailing Duty Centralized Electronic Service System (ACCESS). ACCESS is available to registered users at *https://access.trade.gov,* and is available to all parties in the Department's Central Records Unit, room B8024 of the main Department of Commerce building. In addition, a complete version of the Preliminary Decision Memorandum can be accessed directly on the internet at *http://enforcement.trade.gov/frn/.* The signed Preliminary Decision Memorandum and the electronic version of the Preliminary Decision Memorandum are identical in content.

Scope of the Investigation

The product covered by this investigation is CTL plate from Italy. For a full description of the scope of this investigation, *see* the ''Scope of the Investigation,'' in Appendix I of this notice.

Scope Comments

In accordance with the *Preamble* to the Department's regulations,[3] the *Initiation Notice* set aside a period of time for parties to raise issues regarding product coverage, *i.e.,* scope.[4] Certain interested parties commented on the scope of the concurrent CTL plate investigations as it appeared in the *Initiation Notice.* For a summary of the product coverage comments and rebuttal responses submitted to the records of this and the concurrent CTL plate investigations, and a discussion and analysis of all comments timely received, *see* the Department's Preliminary Scope Decision Memorandum and the Department's Additional Preliminary Scope Decision Memorandum.[5] The Department has preliminarily modified the scope language as it appeared in the *Initiation Notice* to clarify the exclusion for stainless steel plate, corrected two tariff numbers that were misidentified in the Petitions and in the *Initiation Notice,* and modified language pertaining to existing steel plate and hot-rolled flat-rolled steel orders.[6]

Methodology

The Department is conducting this investigation in accordance with section 731 of the Act. Export price and, where appropriate, constructed export price are calculated in accordance with section 772 of the Tariff Act of 1930, as amended (the Act). Normal value (NV) is calculated in accordance with section 773 of the Act. For a full description of the methodology underlying our preliminary conclusions, *see* the Preliminary Decision Memorandum.

Preliminary Affirmative Determination of Critical Circumstances, in Part

On October 7, 2016, the petitioners timely filed an amendment to the petition, pursuant to section 733(e)(1) of the Act and 19 CFR 351.206(c)(2)(i), alleging that critical circumstances exist with respect to imports of subject merchandise.[7] We preliminarily determine that critical circumstances do not exist for all non-individually examined companies, but do exist for NLMK Verona SpA (NVR) and Officine Tecnosider s.r.l. (OTS). Further, pursuant to sections 776(a)(1) and 776(a)(2)(A)–(D) and section 776(b) of the Act, we preliminarily find as adverse facts available (AFA) that critical circumstances do exist for Marcegaglia SpA (Marcegaglia), a non-participating mandatory respondent. For a full description of the methodology and results of our analysis, *see* the Preliminary Decision Memorandum.

Adverse Facts Available

Because mandatory respondent Marcegaglia failed to respond to the Department's questionnaire, we preliminarily determine to apply AFA to this respondent, in accordance with sections 776(a) and (b) of the Act and 19 CFR 351.308. For further discussion, *see* the Preliminary Decision Memorandum.

All-Others Rate

Consistent with sections 733(d)(1)(A)(ii) and 735(c)(5) of the Act, the Department also calculated an estimated all-others rate. Section 735(c)(5)(A) of the Act provides that the estimated all-others rate shall be an amount equal to the weighted average of the estimated weighted-average dumping margins established for exporters and producers individually investigated, excluding any zero and *de minimis* margins, and any margins determined entirely under section 776 of the Act.

In this investigation, we based our calculation of the all-others rate on the weighted-average of the margins calculated for NVR and OTS using publicly-ranged data. Because we cannot apply our normal methodology of calculating a weighted-average margin due to requests to protect business-proprietary information, we find this rate to be the best proxy of the actual weighted-average margin determined for these respondents.[8] For further discussion of this calculation, *see* the memorandum entitled ''Certain Carbon and Alloy Steel Cut-to-Length Plate from Italy: Calculation of the Preliminary Margin for All Other Companies,'' dated concurrently with this notice.

Preliminary Determination

The Department preliminarily determines that CTL plate from Italy is being, or is likely to be, sold in the

[1] *See Certain Carbon and Alloy Steel Cut-To-Length Plate From Austria, Belgium, Brazil, France, the Federal Republic of Germany, Italy, Japan, the Republic of Korea, the People's Republic of China, South Africa, Taiwan, and the Republic of Turkey: Initiation of Less-Than-Fair Value Investigations,* 81 FR 27089 (May 5, 2016) (*Initiation Notice*).

[2] *See* Memorandum from Christian Marsh, Deputy Assistant Secretary for Antidumping and Countervailing Duty Operations, to Paul Piquado, Assistant Secretary for Enforcement and Compliance, entitled, ''Decision Memorandum for the Preliminary Determination in the Antidumping Duty Investigation of Certain Carbon and Alloy Steel Cut-To-Length Plate From Italy'' (Preliminary Decision Memorandum), dated concurrently with this notice.

[3] *See Antidumping Duties; Countervailing Duties; Final rule,* 62 FR 27296, 27323 (May 19, 1997) (*Preamble*).

[4] *See Initiation Notice,* 81 FR at 27090.

[5] *See* Memorandum to Christian Marsh, Deputy Assistant Secretary for Antidumping and Countervailing Duty Operations, entitled, ''Certain Carbon and Alloy Steel Cut-to-Length Plate From Austria, Belgium, Brazil, the People's Republic of China, France, the Federal Republic of Germany, Italy, Japan, the Republic of Korea, the Republic of South Africa, Taiwan, and Turkey: Scope Comments Decision Memorandum for the Preliminary Determinations,'' dated September 6, 2016 (Preliminary Scope Decision Memorandum), and Memorandum to Christian Marsh, Deputy Assistant Secretary for Antidumping and Countervailing Duty Operations, entitled, ''Certain Carbon and Alloy Steel Cut-to-Length Plate From Austria, Belgium, Brazil, the People's Republic of China, France, the Federal Republic of Germany, Italy, Japan, the Republic of Korea, the Republic of South Africa, Taiwan, and Turkey: Additional Scope Comments Preliminary Decision Memorandum and Extension of Deadlines for Scope Case Briefs and Scope Rebuttal Briefs,'' dated October 13, 2016 (Additional Preliminary Scope Decision Memorandum), respectively.

[6] *See* Preliminary Scope Decision Memorandum at 2 and 56, and Additional Preliminary Scope Decision Memorandum at 10–11 and 20.

[7] *See* Letter from the Petitioners, entitled, ''Certain Carbon and Alloy Steel Cut-to-Length Plate From Italy: Critical Circumstances Allegation,'' dated October 7, 2016.

[8] *See, e.g., Welded Line Pipe From the Republic of Turkey: Final Determination of Sales at Less Than Fair Value,* 80 FR 61362, 61363 (October 13, 2015).

United States at LTFV, pursuant to section 733 of the Act, and that the following estimated weighted-average dumping margins exist:

Exporter/manufacturer	Weighted-average dumping margin (percent)
NLMK Verona SpA	12.53
Officine Tecnosider s.r.l	6.10
Marcegaglia SpA	130.63
All Others	8.34

Suspension of Liquidation

In accordance with section 733(d)(2) of the Act, we will direct U.S. Customs and Border Protection (CBP) to suspend liquidation of all entries of subject merchandise from Italy, as described in Appendix I of this notice, which are entered, or withdrawn from warehouse, for consumption on or after the date of publication of this notice in the **Federal Register**, except for Marcegaglia, NVR, and OTS, as described below.

Section 733(e)(2) of the Act provides that, given an affirmative determination of critical circumstances, any suspension of liquidation shall apply to unliquidated entries of merchandise entered, or withdrawn from warehouse, for consumption on or after the later of (a) the date which is 90 days before the date on which the suspension of liquidation was first ordered, or (b) the date on which notice of initiation of the investigation was published.

Because we have preliminarily found that critical circumstances exist with regard to imports produced and exported by the mandatory respondents Marcegaglia, NVR, and OTS, we will instruct CBP to suspend liquidation of all entries of CTL plate from Italy, as described in the scope of the investigation, from Marcegaglia, NVR, and OTS, that are entered, or withdrawn from warehouse, for consumption on or after the date that is 90 days prior to the date on which suspension of liquidation is first ordered, *e.g.,* the date of publication of this notice.

Pursuant to section 733(d) of the Act and 19 CFR 351.205(d), we will instruct CBP to require cash deposits [9] equal to the weighted-average amount by which the NV exceeds U.S. price, as indicated in the chart above, as follows: (1) The rate for the mandatory respondents listed above will be the respondent-specific rates we determined in this preliminary determination; (2) if the exporter is not a mandatory respondent identified above, but the producer is, the rate will be the specific rate established for the producer of the subject merchandise; and (3) the rate for all other producers or exporters will be the all-others rate. These suspension of liquidation instructions will remain in effect until further notice.

Disclosure

We intend to disclose the calculations performed to interested parties in this proceeding within five days of the public announcement of this preliminary determination in accordance with 19 CFR 351.224(b).

Verification

As provided in section 782(i) of the Act, we intend to verify information relied upon in making our final determination.

Public Comment

Interested parties are invited to comment on this preliminary determination. Case briefs or other written comments may be submitted to the Assistant Secretary for Enforcement and Compliance no later than seven days after the date on which the final verification report is issued in this proceeding, and rebuttal briefs, limited to issues raised in case briefs, may be submitted no later than five days after the deadline date for case briefs.[10] Pursuant to 19 CFR 351.309(c)(2) and (d)(2), parties who submit case briefs or rebuttal briefs in this proceeding are encouraged to submit with each argument: (1) A statement of the issue; (2) a brief summary of the argument; and (3) a table of authorities.

The Department established separate deadlines for interested parties to provide comments on scope issues.[11] Specifically, case briefs on scope issues were to be submitted no later than October 21, 2016. Scope rebuttal briefs, limited to issues raised in the scope case briefs, were to be submitted no later than November 1, 2016.[12] The Department explained that parties should limit comments on scope issues to their scope case brief and their scope rebuttal brief.[13] Thus, comments on scope issues belong in parties' scope case briefs and scope rebuttal briefs only and not in other case briefs and rebuttal briefs submitted in this investigation. The Department intends to address parties' scope comments in a final scope memorandum.

Pursuant to 19 CFR 351.310(c), interested parties who wish to request a hearing must submit a written request to the Assistant Secretary for Enforcement and Compliance, U.S. Department of Commerce, within 30 days after the date of publication of this notice. Requests should contain the party's name, address, and telephone number, the number of participants, and a list of the issues to be discussed. If a request for a hearing is made, the Department intends to hold the hearing at the U.S. Department of Commerce, 1401 Constitution Avenue NW., Washington, DC 20230, at a time and date to be determined. Parties should confirm by telephone the date, time, and location of the hearing two days before the scheduled date.

All documents must be filed electronically using ACCESS. An electronically-filed request must be received successfully in its entirety by ACCESS by 5:00 p.m. Eastern Standard Time.

Postponement of Final Determination and Extension of Provisional Measures

Section 735(a)(2) of the Act provides that a final determination may be postponed until not later than 135 days after the date of the publication of the preliminary determination if, in the event of an affirmative preliminary determination, a request for such postponement is made by exporters who account for a significant proportion of exports of the subject merchandise, or in the event of a negative preliminary determination, a request for such postponement is made by the petitioner. 19 CFR 351.210(e)(2) requires that requests by respondents for postponement of a final determination be accompanied by a request for extension of provisional measures from a four-month period to a period not more than six months in duration.

OTS requested that, in the event of an affirmative preliminary determination in this investigation, the Department postpone its final determination by 135 days after publication of the preliminary determination, and agreed to extend the application of the provisional measures prescribed under section 733(d) of the Act and 19 CFR 351.210(e)(2), from a four-month period to a period not to

[9] *See Modification of Regulations Regarding the Practice of Accepting Bonds During the Provisional Measures Period in Antidumping and Countervailing Duty Investigations,* 76 FR 61042 (October 3, 2011).

[10] *See* 19 CFR 351.309; *see also* 19 CFR 351.303 (for general filing requirements).

[11] *See* Preliminary Scope Decision Memorandum; Additional Preliminary Scope Decision Memorandum; and Memorandum to the File, entitled, ''Deadlines for Submitting Scope Case Briefs and Scope Rebuttal Briefs,'' dated October 18, 2016 (Deadline Memo for Scope Briefs); and Memorandum to the File, entitled, ''Extension of Deadline for Submitting Scope Rebuttal Briefs,'' dated October 28, 2016 (''Extension Memo for Scope Rebuttal Briefs'').

[12] *See* Deadline Memo for Scope Briefs and Extension Memo for Scope Rebuttal Briefs.

[13] *See e.g.* Deadline Memo for Scope Briefs.

exceed six months.[14] NVR also requested that the Department extend the deadline for the final determination and extend provisional measures.[15]

In accordance with section 735(a)(2)(A) of the Act and 19 CFR 351.210(b)(2)(ii), because (1) our preliminary determination is affirmative; (2) the requesting exporters account for a significant proportion of exports of the subject merchandise; and (3) no compelling reasons for denial exist, we are postponing the final determination until no later than 135 days after the publication of this notice in the **Federal Register** and extending the provisional measures from a four-month period to a period not greater than six months. Accordingly, we will issue our final determination no later than 135 days after the date of publication of this preliminary determination, pursuant to section 735(a)(2) of the Act.[16]

International Trade Commission (ITC) Notification

In accordance with section 733(f) of the Act, we are notifying the ITC of our affirmative preliminary determination of sales at LTFV. If our final determination is affirmative, the ITC will determine before the later of 120 days after the date of this preliminary determination or 45 days after our final determination whether these imports are materially injuring, or threaten material injury to, the U.S. industry.

This determination is issued and published in accordance with sections 733(f) and 777(i)(1) of the Act and 19 CFR 351.205(c).

Dated: November 4, 2016.

Paul Piquado,

Assistant Secretary for Enforcement and Compliance.

Appendix I—Scope of the Investigation

The products covered by this investigation are certain carbon and alloy steel hot-rolled or forged flat plate products not in coils, whether or not painted, varnished, or coated with plastics or other non-metallic substances (cut-to-length plate). Subject merchandise includes plate that is produced by being cut-to-length from coils or from other discrete length plate and plate that is rolled or forged into a discrete length. The products covered include (1) Universal mill plates (*i.e.,* flat-rolled products rolled on four faces or in a closed box pass, of a width exceeding 150 mm but not exceeding 1250 mm, and of a thickness of not less than 4 mm, which are not in coils and without patterns in relief), and (2) hot-rolled or forged flat steel products of a thickness of 4.75 mm or more and of a width which exceeds 150 mm and measures at least twice the thickness, and which are not in coils, whether or not with patterns in relief. The covered products described above may be rectangular, square, circular or other shapes and include products of either rectangular or non-rectangular cross-section where such non-rectangular cross-section is achieved subsequent to the rolling process, *i.e.,* products which have been ''worked after rolling'' (*e.g.,* products which have been beveled or rounded at the edges).

For purposes of the width and thickness requirements referenced above, the following rules apply:

(1) Except where otherwise stated where the nominal and actual thickness or width measurements vary, a product from a given subject country is within the scope if application of either the nominal or actual measurement would place it within the scope based on the definitions set forth above; and

(2) where the width and thickness vary for a specific product (*e.g.,* the thickness of certain products with non-rectangular cross-section, the width of certain products with non-rectangular shape, *etc.*), the measurement at its greatest width or thickness applies.

Steel products included in the scope of this investigation are products in which: (1) Iron predominates, by weight, over each of the other contained elements; and (2) the carbon content is 2 percent or less by weight.

Subject merchandise includes cut-to-length plate that has been further processed in the subject country or a third country, including but not limited to pickling, oiling, levelling, annealing, tempering, temper rolling, skin passing, painting, varnishing, trimming, cutting, punching, beveling, and/or slitting, or any other processing that would not otherwise remove the merchandise from the scope of the investigation if performed in the country of manufacture of the cut-to-length plate.

All products that meet the written physical description, are within the scope of this investigation unless specifically excluded or covered by the scope of an existing order. The following products are outside of, and/or specifically excluded from, the scope of this investigation:

(1) Products clad, plated, or coated with metal, whether or not painted, varnished or coated with plastic or other non-metallic substances;

(2) military grade armor plate certified to one of the following specifications or to a specification that references and incorporates one of the following specifications:

- MIL–A–12560,
- MIL–DTL–12560H,
- MIL–DTL–12560J,
- MIL–DTL–12560K,
- MIL–DTL–32332,
- MIL–A–46100D,
- MIL–DTL–46100–E,
- MIL–46177C,
- MIL–S–16216K Grade HY80,
- MIL–S–16216K Grade HY100,
- MIL–S–24645A HSLA–80;
- MIL–S–24645A HSLA–100,
- T9074–BD–GIB–010/0300 Grade HY80,
- T9074–BD–GIB–010/0300 Grade HY100,
- T9074–BD–GIB–010/0300 Grade HSLA80,
- T9074–BD–GIB–010/0300 Grade HSLA100, and
- T9074–BD–GIB–010/0300 Mod. Grade HSLA115,

except that any cut-to-length plate certified to one of the above specifications, or to a military grade armor specification that references and incorporates one of the above specifications, will not be excluded from the scope if it is also dual- or multiple-certified to any other non-armor specification that otherwise would fall within the scope of this order;

(3) stainless steel plate, containing 10.5 percent or more of chromium by weight and not more than 1.2 percent of carbon by weight;

(4) CTL plate meeting the requirements of ASTM A–829, Grade E 4340 that are over 305 mm in actual thickness;

(5) Alloy forged and rolled CTL plate greater than or equal to 152.4 mm in actual thickness meeting each of the following requirements:

(a) Electric furnace melted, ladle refined & vacuum degassed and having a chemical composition (expressed in weight percentages):

- Carbon 0.23–0.28,
- Silicon 0.05–0.20,
- Manganese 1.20–1.60,
- Nickel not greater than 1.0,
- Sulfur not greater than 0.007,
- Phosphorus not greater than 0.020,
- Chromium 1.0–2.5,
- Molybdenum 0.35–0.80,
- Boron 0.002–0.004,
- Oxygen not greater than 20 ppm,
- Hydrogen not greater than 2 ppm, and
- Nitrogen not greater than 60 ppm;

(b) With a Brinell hardness measured in all parts of the product including mid thickness falling within one of the following ranges:

(i) 270–300 HBW,

(ii) 290–320 HBW, or

(iii) 320–350HBW;

(c) Having cleanliness in accordance with ASTM E45 method A (Thin and Heavy): A not exceeding 1.5, B not exceeding 1.0, C not exceeding 0.5, D not exceeding 1.5; and

(d) Conforming to ASTM A578–S9 ultrasonic testing requirements with acceptance criteria 2 mm flat bottom hole;

(6) Alloy forged and rolled steel CTL plate over 407 mm in actual thickness and meeting the following requirements:

(a) Made from Electric Arc Furnace melted, Ladle refined & vacuum degassed, alloy steel with the following chemical composition (expressed in weight percentages):

- Carbon 0.23–0.28,
- Silicon 0.05–0.15,
- Manganese 1.20–1.50,
- Nickel not greater than 0.4,
- Sulfur not greater than 0.010,
- Phosphorus not greater than 0.020,
- Chromium 1.20–1.50,
- Molybdenum 0.35–0.55,
- Boron 0.002–0.004,
- Oxygen not greater than 20 ppm,

[14] *See* letter from OTS, entitled, ''Certain Carbon Alloy Steel Cut-to-Length Plate From Italy: Request for Postponement of the Final Determination,'' dated October 28, 2016.

[15] *See* letter from NVR, entitled, ''NLMK Verona's Request to Postpone Final Determination,'' dated October 6, 2016.

[16] *See* 19 CFR 351.210(b)(2) and (e).

- Hydrogen not greater than 2 ppm, and
- Nitrogen not greater than 60 ppm;

(b) Having cleanliness in accordance with ASTM E45 method A (Thin and Heavy): A not exceeding 1.5, B not exceeding 1.5, C not exceeding 1.0, D not exceeding 1.5;

(c) Having the following mechanical properties:

(i) With a Brinell hardness not more than 237 HBW measured in all parts of the product including mid thickness; and having a Yield Strength of 75ksi min and UTS 95ksi or more, Elongation of 18% or more and Reduction of area 35% or more; having charpy V at −75 degrees F in the longitudinal direction equal or greater than 15 ft. lbs (single value) and equal or greater than 20 ft. lbs (average of 3 specimens) and conforming to the requirements of NACE MR01–75; or

(ii) With a Brinell hardness not less than 240 HBW measured in all parts of the product including mid thickness; and having a Yield Strength of 90 ksi min and UTS 110 ksi or more, Elongation of 15% or more and Reduction of area 30% or more; having charpy V at −40 degrees F in the longitudinal direction equal or greater than 21 ft. lbs (single value) and equal or greater than 31 ft. lbs (average of 3 specimens);

(d) Conforming to ASTM A578–S9 ultrasonic testing requirements with acceptance criteria 3.2 mm flat bottom hole; and

(e) Conforming to magnetic particle inspection in accordance with AMS 2301;

(7) Alloy forged and rolled steel CTL plate over 407 mm in actual thickness and meeting the following requirements:

(a) Made from Electric Arc Furnace melted, ladle refined & vacuum degassed, alloy steel with the following chemical composition (expressed in weight percentages):

- Carbon 0.25–0.30,
- Silicon not greater than 0.25,
- Manganese not greater than 0.50,
- Nickel 3.0–3.5,
- Sulfur not greater than 0.010,
- Phosphorus not greater than 0.020,
- Chromium 1.0–1.5,
- Molybdenum 0.6–0.9,
- Vanadium 0.08 to 0.12
- Boron 0.002–0.004,
- Oxygen not greater than 20 ppm,
- Hydrogen not greater than 2 ppm, and
- Nitrogen not greater than 60 ppm.

(b) Having cleanliness in accordance with ASTM E45 method A (Thin and Heavy): A not exceeding 1.0(t) and 0.5(h), B not exceeding 1.5(t) and 1.0(h), C not exceeding 1.0(t) and 0.5(h), and D not exceeding 1.5(t) and 1.0(h);

(c) Having the following mechanical properties: A Brinell hardness not less than 350 HBW measured in all parts of the product including mid thickness; and having a Yield Strength of 145ksi or more and UTS 160ksi or more, Elongation of 15% or more and Reduction of area 35% or more; having charpy V at −40 degrees F in the transverse direction equal or greater than 20 ft. lbs (single value) and equal or greater than 25 ft. lbs (average of 3 specimens);

(d) Conforming to ASTM A578–S9 ultrasonic testing requirements with acceptance criteria 3.2 mm flat bottom hole; and

(e) Conforming to magnetic particle inspection in accordance with AMS 2301.

The products subject to the investigation are currently classified in the Harmonized Tariff Schedule of the United States (HTSUS) under item numbers: 7208.40.3030, 7208.40.3060, 7208.51.0030, 7208.51.0045, 7208.51.0060, 7208.52.0000, 7211.13.0000, 7211.14.0030, 7211.14.0045, 7225.40.1110, 7225.40.1180, 7225.40.3005, 7225.40.3050, 7226.20.0000, and 7226.91.5000.

The products subject to the investigation may also enter under the following HTSUS item numbers: 7208.40.6060, 7208.53.0000, 7208.90.0000, 7210.70.3000, 7210.90.9000, 7211.19.1500, 7211.19.2000, 7211.19.4500, 7211.19.6000, 7211.19.7590, 7211.90.0000, 7212.40.1000, 7212.40.5000, 7212.50.0000, 7214.10.0000, 7214.30.0010, 7214.30.0080, 7214.91.0015, 7214.91.0060, 7214.91.0090, 7225.11.0000, 7225.19.0000, 7225.40.5110, 7225.40.5130, 7225.40.5160, 7225.40.7000, 7225.99.0010, 7225.99.0090, 7226.11.1000, 7226.11.9060, 7226.19.1000, 7226.19.9000, 7226.91.0500, 7226.91.1530, 7226.91.1560, 7226.91.2530, 7226.91.2560, 7226.91.7000, 7226.91.8000, and 7226.99.0180.

The HTSUS subheadings above are provided for convenience and customs purposes only. The written description of the scope of the investigation is dispositive.

Appendix II—List of Topics Discussed in the Preliminary Decision Memorandum

I. Summary
II. Background
III. Period of Investigation
IV. Scope Comments
V. Preliminary Determination of Critical Circumstances
VI. Discussion of the Methodology
(A) Determination of Comparison Method
(B) Results of the Differential Pricing Analysis
VII. Date of Sale
VIII. Product Comparisons
IX. Export Price/Constructed Export Price
X. Normal Value
(A) Home Market Viability
(B) Level of Trade
(C) Cost of Production (COP) Analysis
1. Cost Averaging Methodology
2. Calculation of COP
3. Test of Comparison Market Sales Prices
4. Results of the COP Test
(D) Calculation of NV Based on Comparison-Market Prices
(E) Price-to-Constructed Value Comparisons
XI. Application of Facts Available and Use of Adverse Inference
(A) Application of Facts Available
(B) Use of Adverse Inference
(C) Selection and Corroboration of the AFA Rate
XII. Currency Conversion
XIII. Conclusion

[FR Doc. 2016–27304 Filed 11–10–16; 8:45 am]

BILLING CODE 3510–DS–P

DEPARTMENT OF COMMERCE

International Trade Administration

[A–588–875]

Certain Carbon and Alloy Steel Cut-To-Length Plate From Japan: Preliminary Determination of Sales at Less Than Fair Value and Postponement of Final Determination

AGENCY: Enforcement and Compliance, International Trade Administration, Department of Commerce.

SUMMARY: The Department of Commerce (''Department'') preliminarily determines that certain carbon and alloy steel cut-to-length plate (''CTL plate'') from Japan is being, or is likely to be, sold in the United States at less than fair value (''LTFV''). The period of investigation (''POI'') is April 1, 2015, through March 31, 2016. The estimated weighted-average dumping margins of sales at LTFV are shown in the ''Preliminary Determination'' section of this notice. Interested parties are invited to comment on this preliminary determination.

DATES: Effective November 14, 2016.

FOR FURTHER INFORMATION CONTACT: Kabir Archuletta, AD/CVD Operations, Office V, Enforcement and Compliance, International Trade Administration, U.S. Department of Commerce, 1401 Constitution Avenue NW., Washington, DC 20230; telephone: (202) 482–2593.

SUPPLEMENTARY INFORMATION:

Background

The Department initiated this investigation on April 28, 2016.[1] For a complete description of the events that followed the initiation of this investigation, *see* the memorandum that is dated concurrently with this determination and hereby adopted by this notice.[2] A list of topics in the Preliminary Decision Memorandum is included as Appendix II to this notice.

The Preliminary Decision Memorandum is a public document and is made available to the public via

[1] *See Certain Carbon and Alloy Steel Cut-To-Length Plate From Austria, Belgium, Brazil, France, the Federal Republic of Germany, Italy, Japan, the Republic of Korea, the People's Republic of China, South Africa, Taiwan, and the Republic of Turkey: Initiation of Less-Than-Fair Value Investigations*, 81 FR 27089 (May 5, 2016) (''*Initiation Notice*'').

[2] *See* Memorandum from Christian Marsh, Deputy Assistant Secretary for Antidumping and Countervailing Duty Operations, to Paul Piquado, Assistant Secretary for Enforcement and Compliance, ''Decision Memorandum for the Preliminary Determination in the Antidumping Duty Investigation of Certain Carbon and Alloy Steel Cut-To-Length Plate From Japan'' (''Preliminary Decision Memorandum'') dated concurrently with this notice.

Enforcement and Compliance's Antidumping and Countervailing Duty Centralized Electronic Service System (''ACCESS''). ACCESS is available to registered users at *https://access.trade.gov*, and is available to all parties in the Department's Central Records Unit, room B8024 of the main Department of Commerce building. In addition, a complete version of the Preliminary Decision Memorandum can be accessed directly on the internet at *http://enforcement.trade.gov/frn/.* The signed Preliminary Decision Memorandum and the electronic version of the Preliminary Decision Memorandum are identical in content.

Scope of the Investigation

The product covered by this investigation is CTL plate from Japan. For a full description of the scope of this investigation, *see* the ''Scope of the Investigation,'' in Appendix I of this notice.

Scope Comments

In accordance with the *Preamble* to the Department's regulations,[3] the *Initiation Notice* set aside a period of time for parties to raise issues regarding product coverage, *i.e.*, scope.[4] Certain interested parties commented on the scope of the concurrent CTL plate investigations as it appeared in the *Initiation Notice.* For a summary of the product coverage comments and rebuttal responses submitted to the records of this and the concurrent CTL plate investigations, and a discussion and analysis of all comments timely received, *see* the Department's Preliminary Scope Decision Memorandum and the Department's Additional Preliminary Scope Decision Memorandum.[5] The Department has preliminarily modified the scope language as it appeared in the *Initiation Notice* to clarify the exclusion for stainless steel plate, corrected two tariff numbers that were misidentified in the Petitions and in the *Initiation Notice*, and modified language pertaining to existing steel plate and hot-rolled flat-rolled steel orders.[6]

Methodology

The Department is conducting this investigation in accordance with section 731 of the Tariff Act of 1930, as amended (''the Act''). There is one mandatory respondent participating in this investigation. Export price is calculated in accordance with section 772 of the Act. Normal value (''NV'') is calculated in accordance with section 773 of the Act. For a full description of the methodology underlying our preliminary conclusions, *see* the Preliminary Decision Memorandum.

Adverse Facts Available

Because mandatory respondent JFE Steel Corporation (''JFE'')[7] and Shimabun Corporation (''Shimabun'')[8] failed to respond to the Department's questionnaire, we preliminarily determine to apply adverse facts available (''AFA'') to these respondents, in accordance with sections 776(a) and (b) of the Act and 19 CFR 351.308. For further discussion, *see* the Preliminary Decision Memorandum.

All-Others Rate

Consistent with sections 733(d)(1)(A)(ii) and 735(c)(5) of the Act, the Department also calculated an estimated all-others rate. Section 735(c)(5)(A) of the Act provides that the estimated all-others rate shall be an amount equal to the weighted average of the estimated weighted-average dumping margins established for exporters and producers individually investigated, excluding any zero and *de minimis* margins, and any margins determined entirely under section 776 of the Act.

Tokyo Steel Manufacturing Co., Ltd (''Tokyo Steel'') is the only respondent for which the Department calculated a company-specific margin. Therefore, for purposes of determining the ''all others'' rate and pursuant to section 735(c)(5)(A) of the Act, we are using the dumping margin calculated for Tokyo Steel, as referenced in the ''Preliminary Determination'' section below.

Preliminary Determination

The Department preliminarily determines that CTL plate from Japan is being, or is likely to be, sold in the United States at LTFV, pursuant to section 733 of the Act, and that the following estimated weighted-average dumping margins exist:

Exporter/manufacturer	Weighted-average dumping margin (percent)
Tokyo Steel Manufacturing Co., Ltd	14.96
JFE Steel Corporation	48.64
Shimabun Corporation	48.64
All Others	14.96

Suspension of Liquidation

In accordance with section 733(d)(2) of the Act, we will direct U.S. Customs and Border Protection (''CBP'') to suspend liquidation of all entries of subject merchandise from Japan, as described in Appendix I of this notice, which are entered, or withdrawn from warehouse, for consumption on or after the date of publication of this notice in the **Federal Register**.

Pursuant to section 733(d) of the Act and 19 CFR 351.205(d), we will instruct CBP to require cash deposits[9] equal to the weighted-average amount by which the NV exceeds U.S. price, as indicated in the chart above, as follows: (1) The rate for the mandatory respondents listed above will be the respondent-specific rates we determined in this preliminary determination; (2) if the exporter is not a mandatory respondent identified above, but the producer is, the rate will be the specific rate established for the producer of the subject merchandise; and (3) the rate for all other producers or exporters will be the all-others rate. These suspension of liquidation instructions will remain in effect until further notice.

Disclosure

We intend to disclose the calculations performed to interested parties in this proceeding within five days of the public announcement of this preliminary determination in accordance with 19 CFR 351.224(b).

Verification

As provided in section 782(i) of the Act, we intend to verify information

[3] *See Antidumping Duties; Countervailing Duties; Final rule*, 62 FR 27296, 27323 (May 19, 1997) (*Preamble*).

[4] *See Initiation Notice*, 81 FR at 27090.

[5] *See* Memorandum to Christian Marsh, Deputy Assistant Secretary for Antidumping and Countervailing Duty Operations, ''Certain Carbon and Alloy Steel Cut-to-Length Plate From Austria, Belgium, Brazil, the People's Republic of China, France, the Federal Republic of Germany, Italy, Japan, the Republic of Korea, the Republic of South Africa, Taiwan, and Turkey: Scope Comments Decision Memorandum for the Preliminary Determinations,'' (September 6, 2016) (''Preliminary Scope Decision Memorandum''), and Memorandum to Christian Marsh, Deputy Assistant Secretary for Antidumping and Countervailing Duty Operations, Certain Carbon and Alloy Steel Cut-to-Length Plate From Austria, Belgium, Brazil, the People's Republic of China, France, the Federal Republic of Germany, Italy, Japan, the Republic of Korea, the Republic of South Africa, Taiwan, and Turkey: Additional Scope Comments Preliminary Decision Memorandum and Extension of Deadlines for Scope Case Briefs and Scope Rebuttal Briefs'' (October 13, 2016) (''Additional Preliminary Scope Decision Memorandum''), respectively.

[6] *See* Preliminary Scope Decision Memorandum at 2 and 56, and Additional Preliminary Scope Decision Memorandum at 10–11 and 20.

[7] *See* Letter to the Secretary of Commerce from JFE ''Advisement of Non-Participation in Investigation'' (June 20, 2016).

[8] *See* Letter to the Secretary of Commerce from Shimabun ''Shimabun's Notification of Non-Participation'' (July 29, 2016).

[9] *See Modification of Regulations Regarding the Practice of Accepting Bonds During the Provisional Measures Period in Antidumping and Countervailing Duty Investigations,* 76 FR 61042 (October 3, 2011).

relied upon in making our final determination.

Public Comment

Interested parties are invited to comment on this preliminary determination. Case briefs or other written comments may be submitted to the Assistant Secretary for Enforcement and Compliance no later than seven days after the date on which the final verification report is issued in this proceeding, and rebuttal briefs, limited to issues raised in case briefs, may be submitted no later than five days after the deadline date for case briefs.[10] Pursuant to 19 CFR 351.309(c)(2) and (d)(2), parties who submit case briefs or rebuttal briefs in this proceeding are encouraged to submit with each argument: (1) A statement of the issue; (2) a brief summary of the argument; and (3) a table of authorities.

The Department established separate deadlines for interested parties to provide comments on scope issues.[11] Specifically, case briefs on scope issues were to be submitted no later than October 21, 2016. Scope rebuttal briefs, limited to issues raised in the scope case briefs, were to be submitted no later than November 1, 2016.[12] The Department explained that parties should limit comments on scope issues to their scope case brief and their scope rebuttal brief. [13] Thus, comments on scope issues belong in parties' scope case briefs and scope rebuttal briefs only and not in other case briefs and rebuttal briefs submitted in this investigation. The Department intends to address parties' scope comments in a final scope memorandum.

Pursuant to 19 CFR 351.310(c), interested parties who wish to request a hearing must submit a written request to the Assistant Secretary for Enforcement and Compliance, U.S. Department of Commerce, within 30 days after the date of publication of this notice. Requests should contain the party's name, address, and telephone number, the number of participants, and a list of the issues to be discussed. If a request for a hearing is made, the Department intends to hold the hearing at the U.S. Department of Commerce, 1401 Constitution Avenue NW., Washington, DC 20230, at a time and date to be determined. Parties should confirm by telephone the date, time, and location of the hearing two days before the scheduled date.

All documents must be filed electronically using ACCESS. An electronically-filed request must be received successfully in its entirety by ACCESS by 5:00 p.m. Eastern Standard Time.

Postponement of Final Determination and Extension of Provisional Measures

Section 735(a)(2) of the Act provides that a final determination may be postponed until not later than 135 days after the date of the publication of the preliminary determination if, in the event of an affirmative preliminary determination, a request for such postponement is made by exporters who account for a significant proportion of exports of the subject merchandise, or in the event of a negative preliminary determination, a request for such postponement is made by the petitioner. 19 CFR 351.210(e)(2) requires that requests by respondents for postponement of a final determination be accompanied by a request for extension of provisional measures from a four-month period to a period not more than six months in duration.

Respondent Tokyo Steel requested that, in the event of an affirmative preliminary determination in this investigation, the Department postpone its final determination, *i.e.,* to 135 days after publication of the preliminary determination, and agreed to extend the application of the provisional measures prescribed under section 733(d) of the Act and 19 CFR 351.210(e)(2), from a four-month period to a period not to exceed six months.

In accordance with section 735(a)(2)(A) of the Act and 19 CFR 351.210(b)(2)(ii), because (1) our preliminary determination is affirmative; (2) the requesting exporters account for a significant proportion of exports of the subject merchandise; and (3) no compelling reasons for denial exist, we are postponing the final determination until no later than 135 days after the publication of this notice in the **Federal Register** and extending the provisional measures from a four-month period to a period not greater than six months. Accordingly, we will issue our final determination no later than 135 days after the date of publication of this preliminary determination, pursuant to section 735(a)(2) of the Act.[14]

International Trade Commission ("ITC") Notification

In accordance with section 733(f) of the Act, we are notifying the ITC of our affirmative preliminary determination of sales at LTFV. If our final determination is affirmative, the ITC will determine before the later of 120 days after the date of this preliminary determination or 45 days after our final determination whether these imports are materially injuring, or threaten material injury to, the U.S. industry.

This determination is issued and published in accordance with sections 733(f) and 777(i)(1) of the Act and 19 CFR 351.205(c).

Dated: November 4, 2016.

Paul Piquado,

Assistant Secretary for Enforcement and Compliance.

Appendix I—Scope of the Investigation

The products covered by this investigation are certain carbon and alloy steel hot-rolled or forged flat plate products not in coils, whether or not painted, varnished, or coated with plastics or other non-metallic substances (cut-to-length plate). Subject merchandise includes plate that is produced by being cut-to-length from coils or from other discrete length plate and plate that is rolled or forged into a discrete length. The products covered include (1) Universal mill plates (*i.e.,* flat-rolled products rolled on four faces or in a closed box pass, of a width exceeding 150 mm but not exceeding 1250 mm, and of a thickness of not less than 4 mm, which are not in coils and without patterns in relief), and (2) hot-rolled or forged flat steel products of a thickness of 4.75 mm or more and of a width which exceeds 150 mm and measures at least twice the thickness, and which are not in coils, whether or not with patterns in relief. The covered products described above may be rectangular, square, circular or other shapes and include products of either rectangular or non-rectangular cross-section where such non-rectangular cross-section is achieved subsequent to the rolling process, *i.e.,* products which have been "worked after rolling" (*e.g.,* products which have been beveled or rounded at the edges).

For purposes of the width and thickness requirements referenced above, the following rules apply:

(1) Except where otherwise stated where the nominal and actual thickness or width measurements vary, a product from a given subject country is within the scope if application of either the nominal or actual measurement would place it within the scope based on the definitions set forth above unless the product is already covered by an order existing on that specific country (*i.e., Certain Hot-Rolled Steel Flat Products From Australia, Brazil, Japan, the Republic of*

[10] *See* 19 CFR 351.309; *see also* 19 CFR 351.303 (for general filing requirements).

[11] *See* Preliminary Scope Decision Memorandum; Additional Preliminary Scope Decision Memorandum; and Memorandum to the File "Deadlines for Submitting Scope Case Briefs and Scope Rebuttal Briefs" (October 18, 2016) ("Deadline Memo for Scope Briefs"); and Memorandum to the File "Extension of Deadline for Submitting Scope Rebuttal Briefs" (October 28, 2016) ("Extension Memo for Scope Rebuttal Briefs").

[12] *See* Deadline Memo for Scope Briefs and Extension Memo for Scope Rebuttal Briefs.

[13] *See, e.g.,* Deadline Memo for Scope Briefs.

[14] *See* 19 CFR 351.210(b)(2) and (e).

Korea, the Netherlands, the Republic of Turkey, and the United Kingdom: Amended Final Affirmative Antidumping Determinations for Australia, the Republic of Korea, and the Republic of Turkey and Antidumping Duty Orders, 81 FR 67962 (October 3, 2016).); and

(2) where the width and thickness vary for a specific product (*e.g.,* the thickness of certain products with non-rectangular cross-section, the width of certain products with non-rectangular shape, *etc.*), the measurement at its greatest width or thickness applies.

Steel products included in the scope of this investigation are products in which: (1) Iron predominates, by weight, over each of the other contained elements; and (2) the carbon content is 2 percent or less by weight.

Subject merchandise includes cut-to-length plate that has been further processed in the subject country or a third country, including but not limited to pickling, oiling, levelling, annealing, tempering, temper rolling, skin passing, painting, varnishing, trimming, cutting, punching, beveling, and/or slitting, or any other processing that would not otherwise remove the merchandise from the scope of the investigation if performed in the country of manufacture of the cut-to-length plate.

All products that meet the written physical description, are within the scope of this investigation unless specifically excluded or covered by the scope of an existing order. The following products are outside of, and/or specifically excluded from, the scope of this investigation:

(1) Products clad, plated, or coated with metal, whether or not painted, varnished or coated with plastic or other non-metallic substances;

(2) military grade armor plate certified to one of the following specifications or to a specification that references and incorporates one of the following specifications:

- MIL–A–12560,
- MIL–DTL–12560H,
- MIL–DTL–12560J,
- MIL–DTL–12560K,
- MIL–DTL–32332,
- MIL–A–46100D,
- MIL–DTL–46100–E,
- MIL–46177C,
- MIL–S–16216K Grade HY80,
- MIL–S–16216K Grade HY100,
- MIL–S–24645A HSLA–80;
- MIL–S–24645A HSLA–100,
- T9074–BD–GIB–010/0300 Grade HY80,
- T9074–BD–GIB–010/0300 Grade HY100,
- T9074–BD–GIB–010/0300 Grade HSLA80,
- T9074–BD–GIB–010/0300 Grade HSLA100, and
- T9074–BD–GIB–010/0300 Mod. Grade HSLA115,

except that any cut-to-length plate certified to one of the above specifications, or to a military grade armor specification that references and incorporates one of the above specifications, will not be excluded from the scope if it is also dual- or multiple-certified to any other non-armor specification that otherwise would fall within the scope of this order;

(3) stainless steel plate, containing 10.5 percent or more of chromium by weight and not more than 1.2 percent of carbon by weight;

(4) CTL plate meeting the requirements of ASTM A–829, Grade E 4340 that are over 305 mm in actual thickness;

(5) Alloy forged and rolled CTL plate greater than or equal to 152.4 mm in actual thickness meeting each of the following requirements:

(a) Electric furnace melted, ladle refined & vacuum degassed and having a chemical composition (expressed in weight percentages):

- Carbon 0.23–0.28,
- Silicon 0.05–0.20,
- Manganese 1.20–1.60,
- Nickel not greater than 1.0,
- Sulfur not greater than 0.007,
- Phosphorus not greater than 0.020,
- Chromium 1.0–2.5,
- Molybdenum 0.35–0.80,
- Boron 0.002–0.004,
- Oxygen not greater than 20 ppm,
- Hydrogen not greater than 2 ppm, and
- Nitrogen not greater than 60 ppm;

(b) With a Brinell hardness measured in all parts of the product including mid thickness falling within one of the following ranges:

(i) 270–300 HBW,

(ii) 290–320 HBW, or

(iii) 320–350HBW;

(c) Having cleanliness in accordance with ASTM E45 method A (Thin and Heavy): A not exceeding 1.5, B not exceeding 1.0, C not exceeding 0.5, D not exceeding 1.5; and

(d) Conforming to ASTM A578–S9 ultrasonic testing requirements with acceptance criteria 2 mm flat bottom hole;

(6) Alloy forged and rolled steel CTL plate over 407 mm in actual thickness and meeting the following requirements:

(a) Made from Electric Arc Furnace melted, Ladle refined & vacuum degassed, alloy steel with the following chemical composition (expressed in weight percentages):

- Carbon 0.23–0.28,
- Silicon 0.05–0.15,
- Manganese 1.20–1.50,
- Nickel not greater than 0.4,
- Sulfur not greater than 0.010,
- Phosphorus not greater than 0.020,
- Chromium 1.20–1.50,
- Molybdenum 0.35–0.55,
- Boron 0.002–0.004,
- Oxygen not greater than 20 ppm,
- Hydrogen not greater than 2 ppm, and
- Nitrogen not greater than 60 ppm;

(b) Having cleanliness in accordance with ASTM E45 method A (Thin and Heavy): A not exceeding 1.5, B not exceeding 1.5, C not exceeding 1.0, D not exceeding 1.5;

(c) Having the following mechanical properties:

(i) With a Brinell hardness not more than 237 HBW measured in all parts of the product including mid thickness; and having a Yield Strength of 75ksi min and UTS 95ksi or more, Elongation of 18% or more and Reduction of area 35% or more; having charpy V at −75 degrees F in the longitudinal direction equal or greater than 15 ft. lbs (single value) and equal or greater than 20 ft. lbs (average of 3 specimens) and conforming to the requirements of NACE MR01–75; or

(ii) With a Brinell hardness not less than 240 HBW measured in all parts of the product including mid thickness; and having a Yield Strength of 90 ksi min and UTS 110 ksi or more, Elongation of 15% or more and Reduction of area 30% or more; having charpy V at −40 degrees F in the longitudinal direction equal or greater than 21 ft. lbs (single value) and equal or greater than 31 ft. lbs (average of 3 specimens);

(d) Conforming to ASTM A578–S9 ultrasonic testing requirements with acceptance criteria 3.2 mm flat bottom hole; and

(e) Conforming to magnetic particle inspection in accordance with AMS 2301;

(7) Alloy forged and rolled steel CTL plate over 407 mm in actual thickness and meeting the following requirements:

(a) Made from Electric Arc Furnace melted, ladle refined & vacuum degassed, alloy steel with the following chemical composition (expressed in weight percentages):

- Carbon 0.25–0.30,
- Silicon not greater than 0.25,
- Manganese not greater than 0.50,
- Nickel 3.0–3.5,
- Sulfur not greater than 0.010,
- Phosphorus not greater than 0.020,
- Chromium 1.0–1.5,
- Molybdenum 0.6–0.9,
- Vanadium 0.08 to 0.12
- Boron 0.002–0.004,
- Oxygen not greater than 20 ppm,
- Hydrogen not greater than 2 ppm, and
- Nitrogen not greater than 60 ppm.

(b) Having cleanliness in accordance with ASTM E45 method A (Thin and Heavy): A not exceeding 1.0(t) and 0.5(h), B not exceeding 1.5(t) and 1.0(h), C not exceeding 1.0(t) and 0.5(h), and D not exceeding 1.5(t) and 1.0(h);

(c) Having the following mechanical properties: A Brinell hardness not less than 350 HBW measured in all parts of the product including mid thickness; and having a Yield Strength of 145ksi or more and UTS 160ksi or more, Elongation of 15% or more and Reduction of area 35% or more; having charpy V at −40 degrees F in the transverse direction equal or greater than 20 ft. lbs (single value) and equal or greater than 25 ft. lbs (average of 3 specimens);

(d) Conforming to ASTM A578–S9 ultrasonic testing requirements with acceptance criteria 3.2 mm flat bottom hole; and

(e) Conforming to magnetic particle inspection in accordance with AMS 2301.

The products subject to the investigation are currently classified in the Harmonized Tariff Schedule of the United States (HTSUS) under item numbers: 7208.40.3030, 7208.40.3060, 7208.51.0030, 7208.51.0045, 7208.51.0060, 7208.52.0000, 7211.13.0000, 7211.14.0030, 7211.14.0045, 7225.40.1110, 7225.40.1180, 7225.40.3005, 7225.40.3050, 7226.20.0000, and 7226.91.5000.

The products subject to the investigation may also enter under the following HTSUS item numbers: 7208.40.6060, 7208.53.0000, 7208.90.0000, 7210.70.3000, 7210.90.9000, 7211.19.1500, 7211.19.2000, 7211.19.4500, 7211.19.6000, 7211.19.7590, 7211.90.0000, 7212.40.1000, 7212.40.5000, 7212.50.0000, 7214.10.0000, 7214.30.0010, 7214.30.0080, 7214.91.0015, 7214.91.0060, 7214.91.0090, 7225.11.0000, 7225.19.0000, 7225.40.5110,

7225.40.5130, 7225.40.5160, 7225.40.7000, 7225.99.0010, 7225.99.0090, 7226.11.1000, 7226.11.9060, 7226.19.1000, 7226.19.9000, 7226.91.0500, 7226.91.1530, 7226.91.1560, 7226.91.2530, 7226.91.2560, 7226.91.7000, 7226.91.8000, and 7226.99.0180.

The HTSUS subheadings above are provided for convenience and customs purposes only. The written description of the scope of the investigation is dispositive.

Appendix II—List of Topics

Discussed in the Preliminary Decision Memorandum

1. Summary
2. Background
3. Period of Investigation
4. Scope Comments
5. Discussion of the Methodology
   a. Determination of Comparison Method
   b. Results of the Differential Pricing Analysis
6. Date of Sale
7. Product Comparisons
8. Export Price
9. Normal Value
   a. Home Market Viability
   b. Level of Trade
   c. Cost of Production Analysis
   1. Calculation of COP
   2. Test of Comparison Market Sales Prices
   3. Results of the COP Test
   d. Overrun Sales
   e. Calculation of NV Based on Comparison-Market Prices
10. Application of Facts Available and Use of Adverse Inference
   a. Application of Facts Available
   b. Use of Adverse Inference
   c. Selection and Corroboration of the AFA Rate
11. Currency Conversion
12. Conclusion

[FR Doc. 2016–27316 Filed 11–10–16; 8:45 am]

BILLING CODE 3510–DS–P

DEPARTMENT OF COMMERCE

International Trade Administration

[A–423–812]

Certain Carbon and Alloy Steel Cut-To-Length Plate From Belgium: Preliminary Determination of Sales at Less Than Fair Value and Postponement of Final Determination

AGENCY: Enforcement and Compliance, International Trade Administration, Department of Commerce.

SUMMARY: The Department of Commerce (the Department) preliminarily determines that certain carbon and alloy steel cut-to-length plate (CTL plate) from Belgium is being, or is likely to be, sold in the United States at less than fair value (LTFV). The period of investigation (POI) is April 1, 2015, through March 31, 2016. The estimated weighted-average dumping margins of sales at LTFV are shown in the ''Preliminary Determination'' section of this notice. Interested parties are invited to comment on this preliminary determination.

DATES: Effective November 14, 2016.

FOR FURTHER INFORMATION CONTACT: Andrew Medley or David Crespo, AD/CVD Operations, Office II, Enforcement and Compliance, International Trade Administration, U.S. Department of Commerce, 1401 Constitution Avenue NW., Washington, DC 20230; telephone: (202) 482–4987 or (202) 482–3693, respectively.

SUPPLEMENTARY INFORMATION:

Background

The Department initiated this investigation on April 28, 2016.[1] For a complete description of the events that followed the initiation of this investigation, *see* the memorandum that is dated concurrently with this determination and hereby adopted by this notice.[2] A list of topics in the Preliminary Decision Memorandum is included as Appendix II to this notice.

The Preliminary Decision Memorandum is a public document and is made available to the public via Enforcement and Compliance's Antidumping and Countervailing Duty Centralized Electronic Service System (ACCESS). ACCESS is available to registered users at *https://access.trade.gov,* and is available to all parties in the Department's Central Records Unit, Room B8024 of the main Department of Commerce building. In addition, a complete version of the Preliminary Decision Memorandum can be accessed directly on the internet at *http://enforcement.trade.gov/frn/.* The signed Preliminary Decision Memorandum and the electronic version of the Preliminary Decision Memorandum are identical in content.

Scope of the Investigation

The product covered by this investigation is CTL plate from Belgium. For a full description of the scope of this investigation, *see* the ''Scope of the Investigation,'' in Appendix I of this notice.

Scope Comments

In accordance with the *Preamble* to the Department's regulations,[3] the *Initiation Notice* set aside a period of time for parties to raise issues regarding product coverage, *i.e.,* scope.[4] Certain interested parties commented on the scope of the concurrent CTL plate investigations as it appeared in the *Initiation Notice.* For a summary of the product coverage comments and rebuttal responses submitted to the records of this and the concurrent CTL plate investigations, and a discussion and analysis of all comments timely received, *see* the Department's Preliminary Scope Decision Memorandum and the Department's Additional Preliminary Scope Decision Memorandum.[5] The Department has preliminarily modified the scope language as it appeared in the *Initiation Notice* to clarify the exclusion for stainless steel plate, corrected two tariff numbers that were misidentified in the Petitions and in the *Initiation Notice,* and modified language pertaining to existing steel plate and hot-rolled flat-rolled steel orders.[6]

Methodology

The Department is conducting this investigation in accordance with section 731 of the Act. Export price and, where appropriate, constructed export price are calculated in accordance with section 772 of the Tariff Act of 1930, as amended (the Act). Normal value (NV) is calculated in accordance with section 773 of the Act. For a full description of

---

[1] *See Certain Carbon and Alloy Steel Cut-To-Length Plate From Austria, Belgium, Brazil, France, the Federal Republic of Germany, Italy, Japan, the Republic of Korea, the People's Republic of China, South Africa, Taiwan, and the Republic of Turkey: Initiation of Less-Than-Fair Value Investigations,* 81 FR 27089 (May 5, 2016) (*Initiation Notice*).

[2] *See* Memorandum from Christian Marsh, Deputy Assistant Secretary for Antidumping and Countervailing Duty Operations, to Paul Piquado, Assistant Secretary for Enforcement and Compliance, entitled ''Decision Memorandum for the Preliminary Determination in the Antidumping Duty Investigation of Certain Carbon and Alloy Steel Cut-To-Length Plate From Belgium,'' (Preliminary Decision Memorandum), dated concurrently with this notice.

[3] *See Antidumping Duties; Countervailing Duties; Final rule,* 62 FR 27296, 27323 (May 19, 1997) (*Preamble*).

[4] *See Initiation Notice,* 81 FR at 27090.

[5] *See* Memorandum to Christian Marsh, Deputy Assistant Secretary for Antidumping and Countervailing Duty Operations, entitled, ''Certain Carbon and Alloy Steel Cut-to-Length Plate From Austria, Belgium, Brazil, the People's Republic of China, France, the Federal Republic of Germany, Italy, Japan, the Republic of Korea, the Republic of South Africa, Taiwan, and Turkey: Scope Comments Decision Memorandum for the Preliminary Determinations,'' dated September 6, 2016 (Preliminary Scope Decision Memorandum), and Memorandum to Christian Marsh, Deputy Assistant Secretary for Antidumping and Countervailing Duty Operations, entitled, ''Certain Carbon and Alloy Steel Cut-to-Length Plate From Austria, Belgium, Brazil, the People's Republic of China, France, the Federal Republic of Germany, Italy, Japan, the Republic of Korea, the Republic of South Africa, Taiwan, and Turkey: Additional Scope Comments Preliminary Decision Memorandum and Extension of Deadlines for Scope Case Briefs and Scope Rebuttal Briefs,'' dated October 13, 2016 (Additional Preliminary Scope Decision Memorandum), respectively.

[6] *See* Preliminary Scope Decision Memorandum at 2 and 56, and Additional Preliminary Scope Decision Memorandum at 10–11 and 20.

the methodology underlying our preliminary conclusions, *see* the Preliminary Decision Memorandum.

All-Others Rate

Consistent with sections 733(d)(1)(A)(ii) and 735(c)(5) of the Act, the Department calculated an estimated all-others rate. Section 735(c)(5)(A) of the Act provides that the estimated all-others rate shall be an amount equal to the weighted average of the estimated weighted-average dumping margins established for exporters and producers individually investigated, excluding any zero and *de minimis* margins, and any margins determined entirely under section 776 of the Act.

In this investigation, we based our calculation of the all-others rate on the weighted-average of the margins calculated for the two mandatory respondents participating in this investigation, Industeel Belgium S.A. (Industeel) and NLMK Belgium,[7] using publicly-ranged data. Because we cannot apply our normal methodology of calculating a weighted-average margin due to requests to protect business-proprietary information, we find this rate to be the best proxy of the actual weighted-average margin determined for these respondents.[8] For further discussion of this calculation, *see* the memorandum entitled ''Certain Carbon and Alloy Steel Cut-to-Length Plate from Italy: Calculation of the Preliminary Margin for All Other Companies,'' dated concurrently with this notice.

Preliminary Determination

The Department preliminarily determines that CTL plate from Belgium is being, or is likely to be, sold in the United States at LTFV, pursuant to section 733 of the Act, and that the following estimated weighted-average dumping margins exist:

Exporter/manufacturer	Weighted-average dumping margin (percent)
Industeel Belgium S.A. ...	2.41
NLMK Clabecq S.A., NLMK Plate Sales S.A., NLMK Sales Europe S.A., NLMK Manage Steel Center S.A., and/or NLMK La Louviere S.A.	8.98
All Others	8.50

Suspension of Liquidation

In accordance with section 733(d)(2) of the Act, we will direct U.S. Customs and Border Protection (CBP) to suspend liquidation of all entries of subject merchandise from Belgium, as described in Appendix I of this notice, which are entered, or withdrawn from warehouse, for consumption on or after the date of publication of this notice in the **Federal Register**, except for Industeel and NLMK Belgium, as described below.

Section 733(e)(2) of the Act provides that, given an affirmative determination of critical circumstances, any suspension of liquidation shall apply to unliquidated entries of merchandise entered, or withdrawn from warehouse, for consumption on or after the later of (a) the date which is 90 days before the date on which the suspension of liquidation was first ordered, or (b) the date on which notice of initiation of the investigation was published.

Because we preliminarily found that critical circumstances exist with regard to imports produced and exported by the mandatory respondents Industeel and NLMK Belgium,[9] we will instruct CBP to suspend liquidation of all entries of CTL plate from Belgium, as described in the scope of the investigation, from the mandatory respondents that are entered, or withdrawn from warehouse, for consumption on or after the date that is 90 days prior to the date on which suspension of liquidation is first ordered, *e.g.,* the date of publication of this notice.

Pursuant to section 733(d) of the Act and 19 CFR 351.205(d), we will instruct CBP to require cash deposits [10] equal to the weighted-average amount by which the NV exceeds U.S. price, as indicated in the chart above, as follows: (1) The rates for the mandatory respondents listed above will be the respondent-specific rates we determined in this preliminary determination; (2) if the exporter is not a mandatory respondent identified above, but the producer is, the rate will be the specific rate established for the producer of the subject merchandise; and (3) the rate for all other producers or exporters will be the all-others rate. These suspension of liquidation instructions will remain in effect until further notice.

Disclosure

We intend to disclose the calculations performed to interested parties in this proceeding within five days of the date of publication of this notice in accordance with 19 CFR 351.224(b).

Verification

As provided in section 782(i) of the Act, we intend to verify information relied upon in making our final determination.

Public Comment

Interested parties are invited to comment on this preliminary determination. Case briefs or other written comments may be submitted to the Assistant Secretary for Enforcement and Compliance no later than seven days after the date on which the final verification report is issued in this proceeding, and rebuttal briefs, limited to issues raised in case briefs, may be submitted no later than five days after the deadline date for case briefs.[11] Pursuant to 19 CFR 351.309(c)(2) and (d)(2), parties who submit case briefs or rebuttal briefs in this proceeding are encouraged to submit with each argument: (1) A statement of the issue; (2) a brief summary of the argument; and (3) a table of authorities.

The Department established separate deadlines for interested parties to provide comments on scope issues.[12] Specifically, case briefs on scope issues were to be submitted no later than October 21, 2016. Scope rebuttal briefs, limited to issues raised in the scope case briefs, were to be submitted no later than November 1, 2016.[13] The Department explained that parties

[7] For this preliminary determination, the Department preliminarily determined to collapse, and treat as a single entity, NLMK Clabecq S.A., NLMK Plate Sales S.A., NLMK Sales Europe S.A., NLMK Manage Steel Center S.A., and NLMK La Louviere S.A. (collectively, NLMK Belgium). *See* Memorandum to Melissa Skinner, Director, Office II, ''Less Than Fair Value Investigation of Certain Carbon and Alloy Steel Cut-To-Length Plate from Belgium: Preliminary Affiliation and Collapsing Memorandum for NLMK Belgium,'' dated October 27, 2016.

[8] *See, e.g., Welded Line Pipe From the Republic of Turkey: Final Determination of Sales at Less Than Fair Value,* 80 FR 61362, 61363 (October 13, 2015).

[9] *See Certain Carbon and Alloy Steel Cut-to-Length Plate From Austria, Belgium, Brazil, the Republic of Korea, Taiwan, and Turkey; Antidumping and Countervailing Duty Investigations: Preliminary Determinations of Critical Circumstances,* 81 FR 61666 (September 7, 2016).

[10] *See Modification of Regulations Regarding the Practice of Accepting Bonds During the Provisional Measures Period in Antidumping and Countervailing Duty Investigations,* 76 FR 61042 (October 3, 2011).

[11] *See* 19 CFR 351.309; *see also* 19 CFR 351.303 (for general filing requirements).

[12] *See* Preliminary Scope Decision Memorandum; Additional Preliminary Scope Decision Memorandum; and Memorandum to the File, entitled, ''Deadlines for Submitting Scope Case Briefs and Scope Rebuttal Briefs,'' dated October 18, 2016 (Deadline Memo for Scope Briefs); and Memorandum to the File, entitled, ''Extension of Deadline for Submitting Scope Rebuttal Briefs,'' dated October 28, 2016 (Extension Memo for Scope Rebuttal Briefs).

[13] *See* Deadline Memo for Scope Briefs and Extension Memo for Scope Rebuttal Briefs.

should limit comments on scope issues to their scope case brief and their scope rebuttal brief.[14] Thus, comments on scope issues belong in parties' scope case briefs and scope rebuttal briefs only and not in other case briefs and rebuttal briefs submitted in this investigation. The Department intends to address parties' scope comments in a final scope memorandum.

Pursuant to 19 CFR 351.310(c), interested parties who wish to request a hearing must submit a written request to the Assistant Secretary for Enforcement and Compliance, U.S. Department of Commerce, within 30 days after the date of publication of this notice. Requests should contain the party's name, address, and telephone number, the number of participants, and a list of the issues to be discussed. If a request for a hearing is made, the Department intends to hold the hearing at the U.S. Department of Commerce, 1401 Constitution Avenue NW., Washington, DC 20230, at a time and date to be determined. Parties should confirm by telephone the date, time, and location of the hearing two days before the scheduled date.

All documents must be filed electronically using ACCESS. An electronically-filed request must be received successfully in its entirety by ACCESS by 5:00 p.m. Eastern Standard Time.

Postponement of Final Determination and Extension of Provisional Measures

Section 735(a)(2) of the Act provides that a final determination may be postponed until not later than 135 days after the date of the publication of the preliminary determination if, in the event of an affirmative preliminary determination, a request for such postponement is made by exporters who account for a significant proportion of exports of the subject merchandise, or in the event of a negative preliminary determination, a request for such postponement is made by the petitioner. 19 CFR 351.210(e)(2) requires that requests by respondents for postponement of a final determination be accompanied by a request for extension of provisional measures from a four-month period to a period not more than six months in duration.

Respondents NLMK Belgium and Industeel requested that, in the event of an affirmative preliminary determination in this investigation, the Department postpone its final determination, and extend the application of the provisional measures prescribed under section 733(d) of the Act and 19 CFR 351.210(e)(2), from a four-month period to a period not to exceed six months.[15]

In accordance with section 735(a)(2)(A) of the Act and 19 CFR 351.210(b)(2)(ii), because: (1) Our preliminary determination is affirmative; (2) the requesting exporters account for a significant proportion of exports of the subject merchandise; and (3) no compelling reasons for denial exist, we are postponing the final determination until no later than 135 days after the publication of this notice in the **Federal Register** and extending the provisional measures from a four-month period to a period not greater than six months. Accordingly, we intend to issue our final determination no later than 135 days after the date of publication of this preliminary determination, pursuant to section 735(a)(2) of the Act.[16]

International Trade Commission (ITC) Notification

In accordance with section 733(f) of the Act, we are notifying the ITC of our affirmative preliminary determination of sales at LTFV. If our final determination is affirmative, the ITC will determine before the later of 120 days after the date of this preliminary determination or 45 days after our final determination whether these imports are materially injuring, or threaten material injury to, the U.S. industry.

This determination is issued and published in accordance with sections 733(f) and 777(i)(1) of the Act and 19 CFR 351.205(c).

Dated: November 4, 2016.

Paul Piquado,

Assistant Secretary for Enforcement and Compliance.

Appendix I—Scope of the Investigation

The products covered by this investigation are certain carbon and alloy steel hot-rolled or forged flat plate products not in coils, whether or not painted, varnished, or coated with plastics or other non-metallic substances (cut-to-length plate). Subject merchandise includes plate that is produced by being cut-to-length from coils or from other discrete length plate and plate that is rolled or forged into a discrete length. The products covered include (1) Universal mill plates (*i.e.,* flat-rolled products rolled on four faces or in a closed box pass, of a width exceeding 150 mm but not exceeding 1250 mm, and of a thickness of not less than 4 mm, which are not in coils and without patterns in relief), and (2) hot-rolled or forged flat steel products of a thickness of 4.75 mm or more and of a width which exceeds 150 mm and measures at least twice the thickness, and which are not in coils, whether or not with patterns in relief. The covered products described above may be rectangular, square, circular or other shapes and include products of either rectangular or non-rectangular cross-section where such non-rectangular cross-section is achieved subsequent to the rolling process, *i.e.,* products which have been ''worked after rolling'' (*e.g.,* products which have been beveled or rounded at the edges).

For purposes of the width and thickness requirements referenced above, the following rules apply:

(1) Except where otherwise stated where the nominal and actual thickness or width measurements vary, a product from a given subject country is within the scope if application of either the nominal or actual measurement would place it within the scope based on the definitions set forth above; and

(2) where the width and thickness vary for a specific product (*e.g.,* the thickness of certain products with non-rectangular cross-section, the width of certain products with non-rectangular shape, etc.), the measurement at its greatest width or thickness applies.

Steel products included in the scope of this investigation are products in which: (1) Iron predominates, by weight, over each of the other contained elements; and (2) the carbon content is 2 percent or less by weight.

Subject merchandise includes cut-to-length plate that has been further processed in the subject country or a third country, including but not limited to pickling, oiling, levelling, annealing, tempering, temper rolling, skin passing, painting, varnishing, trimming, cutting, punching, beveling, and/or slitting, or any other processing that would not otherwise remove the merchandise from the scope of the investigation if performed in the country of manufacture of the cut-to-length plate.

All products that meet the written physical description, are within the scope of this investigation unless specifically excluded or covered by the scope of an existing order. The following products are outside of, and/or specifically excluded from, the scope of this investigation:

(1) Products clad, plated, or coated with metal, whether or not painted, varnished or coated with plastic or other non-metallic substances;

(2) military grade armor plate certified to one of the following specifications or to a specification that references and incorporates one of the following specifications:

- MIL–A–12560,
- MIL–DTL–12560H,
- MIL–DTL–12560J,
- MIL–DTL–12560K,
- MIL–DTL–32332,
- MIL–A–46100D,
- MIL–DTL–46100–E,
- MIL–46177C,
- MIL–S–16216K Grade HY80,
- MIL–S–16216K Grade HY100,

[14] *See, e.g.,* Deadline Memo for Scope Briefs.

[15] *See* Letter from NLMK Belgium entitled, ''NLMK Clabecq's Request to Postpone Final Determination: Certain Carbon and Alloy Steel Cut-To-Length Plate From Belgium,'' dated October 6, 2016 and Letter from Industeel entitled, ''Certain Carbon and Alloy Steel Cut-To-Length Plate From Belgium: Request for Postponement of Final Determination,'' dated October 13, 2016.

[16] *See* 19 CFR 351.210(b)(2) and (e).

- MIL–S–24645A HSLA–80;
- MIL–S–24645A HSLA–100,
- T9074–BD–GIB–010/0300 Grade HY80,
- T9074–BD–GIB–010/0300 Grade HY100,
- T9074–BD–GIB–010/0300 Grade HSLA80,
- T9074–BD–GIB–010/0300 Grade HSLA100, and
- T9074–BD–GIB–010/0300 Mod. Grade HSLA115,

except that any cut-to-length plate certified to one of the above specifications, or to a military grade armor specification that references and incorporates one of the above specifications, will not be excluded from the scope if it is also dual- or multiple-certified to any other non-armor specification that otherwise would fall within the scope of this order;

(3) stainless steel plate, containing 10.5 percent or more of chromium by weight and not more than 1.2 percent of carbon by weight;

(4) CTL plate meeting the requirements of ASTM A–829, Grade E 4340 that are over 305 mm in actual thickness;

(5) Alloy forged and rolled CTL plate greater than or equal to 152.4 mm in actual thickness meeting each of the following requirements:

(a) Electric furnace melted, ladle refined & vacuum degassed and having a chemical composition (expressed in weight percentages):

- Carbon 0.23–0.28,
- Silicon 0.05–0.20,
- Manganese 1.20–1.60,
- Nickel not greater than 1.0,
- Sulfur not greater than 0.007,
- Phosphorus not greater than 0.020,
- Chromium 1.0–2.5,
- Molybdenum 0.35–0.80,
- Boron 0.002–0.004,
- Oxygen not greater than 20 ppm,
- Hydrogen not greater than 2 ppm, and
- Nitrogen not greater than 60 ppm;

(b) With a Brinell hardness measured in all parts of the product including mid thickness falling within one of the following ranges:

(i) 270–300 HBW,

(ii) 290–320 HBW, or

(iii) 320–350HBW;

(c) Having cleanliness in accordance with ASTM E45 method A (Thin and Heavy): A not exceeding 1.5, B not exceeding 1.0, C not exceeding 0.5, D not exceeding 1.5; and

(d) Conforming to ASTM A578–S9 ultrasonic testing requirements with acceptance criteria 2 mm flat bottom hole;

(6) Alloy forged and rolled steel CTL plate over 407 mm in actual thickness and meeting the following requirements:

(a) Made from Electric Arc Furnace melted, Ladle refined & vacuum degassed, alloy steel with the following chemical composition (expressed in weight percentages):

- Carbon 0.23–0.28,
- Silicon 0.05–0.15,
- Manganese 1.20–1.50,
- Nickel not greater than 0.4,
- Sulfur not greater than 0.010,
- Phosphorus not greater than 0.020,
- Chromium 1.20–1.50,
- Molybdenum 0.35–0.55,
- Boron 0.002–0.004,
- Oxygen not greater than 20 ppm,
- Hydrogen not greater than 2 ppm, and
- Nitrogen not greater than 60 ppm;

(b) Having cleanliness in accordance with ASTM E45 method A (Thin and Heavy): A not exceeding 1.5, B not exceeding 1.5, C not exceeding 1.0, D not exceeding 1.5;

(c) Having the following mechanical properties:

(i) With a Brinell hardness not more than 237 HBW measured in all parts of the product including mid thickness; and having a Yield Strength of 75ksi min and UTS 95ksi or more, Elongation of 18% or more and Reduction of area 35% or more; having charpy V at −75 degrees F in the longitudinal direction equal or greater than 15 ft. lbs (single value) and equal or greater than 20 ft. lbs (average of 3 specimens) and conforming to the requirements of NACE MR01–75; or

(ii) With a Brinell hardness not less than 240 HBW measured in all parts of the product including mid thickness; and having a Yield Strength of 90 ksi min and UTS 110 ksi or more, Elongation of 15% or more and Reduction of area 30% or more; having charpy V at −40 degrees F in the longitudinal direction equal or greater than 21 ft. lbs (single value) and equal or greater than 31 ft. lbs (average of 3 specimens);

(d) Conforming to ASTM A578–S9 ultrasonic testing requirements with acceptance criteria 3.2 mm flat bottom hole; and

(e) Conforming to magnetic particle inspection in accordance with AMS 2301;

(7) Alloy forged and rolled steel CTL plate over 407 mm in actual thickness and meeting the following requirements:

(a) Made from Electric Arc Furnace melted, ladle refined & vacuum degassed, alloy steel with the following chemical composition (expressed in weight percentages):

- Carbon 0.25–0.30,
- Silicon not greater than 0.25,
- Manganese not greater than 0.50,
- Nickel 3.0–3.5,
- Sulfur not greater than 0.010,
- Phosphorus not greater than 0.020,
- Chromium 1.0–1.5,
- Molybdenum 0.6–0.9,
- Vanadium 0.08 to 0.12
- Boron 0.002–0.004,
- Oxygen not greater than 20 ppm,
- Hydrogen not greater than 2 ppm, and
- Nitrogen not greater than 60 ppm.

(b) Having cleanliness in accordance with ASTM E45 method A (Thin and Heavy): A not exceeding 1.0(t) and 0.5(h), B not exceeding 1.5(t) and 1.0(h), C not exceeding 1.0(t) and 0.5(h), and D not exceeding 1.5(t) and 1.0(h);

(c) Having the following mechanical properties: A Brinell hardness not less than 350 HBW measured in all parts of the product including mid thickness; and having a Yield Strength of 145ksi or more and UTS 160ksi or more, Elongation of 15% or more and Reduction of area 35% or more; having charpy V at −40 degrees F in the transverse direction equal or greater than 20 ft. lbs (single value) and equal or greater than 25 ft. lbs (average of 3 specimens);

(d) Conforming to ASTM A578–S9 ultrasonic testing requirements with acceptance criteria 3.2 mm flat bottom hole; and

(e) Conforming to magnetic particle inspection in accordance with AMS 2301.

The products subject to the investigation are currently classified in the Harmonized Tariff Schedule of the United States (HTSUS) under item numbers: 7208.40.3030, 7208.40.3060, 7208.51.0030, 7208.51.0045, 7208.51.0060, 7208.52.0000, 7211.13.0000, 7211.14.0030, 7211.14.0045, 7225.40.1110, 7225.40.1180, 7225.40.3005, 7225.40.3050, 7226.20.0000, and 7226.91.5000.

The products subject to the investigation may also enter under the following HTSUS item numbers: 7208.40.6060, 7208.53.0000, 7208.90.0000, 7210.70.3000, 7210.90.9000, 7211.19.1500, 7211.19.2000, 7211.19.4500, 7211.19.6000, 7211.19.7590, 7211.90.0000, 7212.40.1000, 7212.40.5000, 7212.50.0000, 7214.10.0000, 7214.30.0010, 7214.30.0080, 7214.91.0015, 7214.91.0060, 7214.91.0090, 7225.11.0000, 7225.19.0000, 7225.40.5110, 7225.40.5130, 7225.40.5160, 7225.40.7000, 7225.99.0010, 7225.99.0090, 7226.11.1000, 7226.11.9060, 7226.19.1000, 7226.19.9000, 7226.91.0500, 7226.91.1530, 7226.91.1560, 7226.91.2530, 7226.91.2560, 7226.91.7000, 7226.91.8000, and 7226.99.0180.

The HTSUS subheadings above are provided for convenience and customs purposes only. The written description of the scope of the investigation is dispositive.

Appendix II—List of Topics Discussed in the Preliminary Decision Memorandum

I. Summary
II. Background
III. Period of Investigation
IV. Scope Comments
V. Affiliation and Collapsing
VI. Preliminary Determination of Critical Circumstances
VII. Discussion of the Methodology
(A) Determination of Comparison Method
(B) Results of the Differential Pricing Analysis
VIII. Date of Sale
IX. Product Comparisons
X. Export Price/Constructed Export Price
XI. Normal Value
(A) Home Market Viability
(B) Level of Trade
(C) Cost of Production (COP) Analysis
1. Calculation of COP
2. Test of Comparison Market Sales Prices
3. Results of the COP Test
(D) Calculation of NV Based on Comparison-Market Prices
(E) Price-to-Constructed Value Comparison
XII. Currency Conversion
XIII. Conclusion

[FR Doc. 2016–27303 Filed 11–10–16; 8:45 am]

BILLING CODE 3510–DS–P

DEPARTMENT OF COMMERCE

International Trade Administration

[A–580–889]

Dioctyl Terephthalate From the Republic of Korea: Postponement of Preliminary Determination of Antidumping Duty Investigation

AGENCY: Enforcement and Compliance, International Trade Administration, Department of Commerce.

DATES: Effective November 14, 2016.

FOR FURTHER INFORMATION CONTACT: Shanah Lee or Laurel LaCivita, AD/CVD Operations, Office III, Enforcement and Compliance, International Trade Administration, U.S. Department of Commerce, 14th Street and Constitution Avenue NW., Washington, DC 20230; telephone: (202) 482–6386 or (202) 482–4243, respectively.

SUPPLEMENTARY INFORMATION:

Background

On July 20, 2016, the Department of Commerce (''Department'') initiated an antidumping duty investigation concerning imports of dioctyl terephthalate (''DOTP'') from the Republic of Korea (''Korea'').[1] The notice of initiation stated that, in accordance with section 733(b)(1)(A) of the Tariff Act of 1930, as amended (''the Act''), and 19 CFR 351.205(b)(1), we would issue our preliminary determination no later than 140 days after the date of initiation, unless postponed. Currently, the preliminary determination in this investigation is due no later than December 7, 2016.

Postponement of Preliminary Determination

If the petitioner makes a timely request for a postponement, section 733(c)(1)(A) of the Act allows the Department to postpone making the preliminary determination until no later than 190 days after the date on which the Department initiated the investigation. On October 28, 2016, Eastman Chemical Company (''Petitioner'') submitted a timely request for a postponement of the preliminary determination pursuant to section 733(c)(1)(A) of the Act and 19 CFR 351.205(e), in order to provide the Department sufficient time to review all relevant information from the respondents and issue appropriate requests for clarification or additional information.[2]

For the reasons stated above, and because there are no compelling reasons to deny Petitioner's request, the Department is postponing the deadline for the preliminary determination to no later than 190 days after the day on which the investigation was initiated, in accordance with section 733(c)(1)(A) of the Act. Accordingly, the Department intends to issue the preliminary determination no later than January 26, 2017. In accordance with section 735(a)(1) of the Act and 19 CFR 351.210(b)(1), the deadline for the final determination of this investigation will continue to be 75 days after the date of the preliminary determination, unless postponed at a later date.

This notice is issued and published pursuant to section 733(c)(2) of the Act and 19 CFR 351.205(f)(1).

Dated: November 3, 2016.

Paul Piquado,

Assistant Secretary for Enforcement and Compliance.

[FR Doc. 2016–27262 Filed 11–10–16; 8:45 am]

BILLING CODE 3510–DS–P

[1] *See Dioctyl Terephthalate From the Republic of Korea: Initiation of Less-Than-Fair-Value Investigation,* 81 FR 49628 (July 28, 2016).

[2] *See* Letter from Petitioner, ''Dioctyl Terephthalate (''DOTP'') from Korea; Request to Postpone Preliminary Determination,'' dated October 28, 2016.

DEPARTMENT OF COMMERCE

International Trade Administration

[A–570–918]

Steel Wire Garment Hangers From the People's Republic of China: Preliminary Results of Antidumping Duty Administrative Review; 2014–2015

AGENCY: Enforcement and Compliance, International Trade Administration, Department of Commerce.

SUMMARY: The Department of Commerce (''Department'') is conducting the seventh administrative review of the antidumping duty order on steel wire garment hangers (''hangers'') from the People's Republic of China (''PRC''). The Department preliminarily finds that subject merchandise was sold in the United States at prices below normal value during the period of review (''POR''), October 1, 2014, through September 30, 2015. If these preliminary results are adopted in our final results of review, we will instruct U.S. Customs and Border Protection (''CBP'') to assess antidumping duties on all appropriate entries of subject merchandise during the POR. We invite interested parties to comment on these preliminary results.

DATES: Effective November 14, 2016.

FOR FURTHER INFORMATION CONTACT: Jessica Weeks, AD/CVD Operations, Office V, Enforcement and Compliance, International Trade Administration, Department of Commerce, 14th Street and Constitution Avenue NW., Washington, DC 20230; telephone: (202) 482–4877.

SUPPLEMENTARY INFORMATION:

Background

On October 1, 2015, the Department published a notice of ''Opportunity to Request Administrative Review'' of the antidumping order on steel wire garment hangers from the PRC.[1] In November 2015, the Department received multiple timely requests to conduct an administrative review of the antidumping duty order on steel wire garment hangers from the PRC.[2] Based upon these requests, on December 3, 2015, the Department published a notice of initiation of an administrative review (''AR'') of the *Order* covering the period October 1, 2014, to September 30, 2015.[3] The Department initiated the administrative review with respect to 46 companies.[4] On December 16, 2015, Petitioner withdrew its request for an administrative review on 44 companies.[5] On June 2, 2016, the Department extended the period for issuing the preliminary results by 120 days.[6] As explained in the memorandum from the Acting Assistant Secretary for Enforcement and Compliance, the Department exercised its discretion to toll deadlines because of the closure of the Federal Government.[7] The preliminary results were extended by four business days.[8] The revised deadline for the preliminary results is November 4, 2016.

[1] *See Antidumping or Countervailing Duty Order, Finding, or Suspended Investigation; Opportunity To Request Administrative Review,* 80 FR 59135 (October 1, 2015).

[2] *See Notice of Antidumping Duty Order: Steel Wire Garment Hangers From the People's Republic of China,* 73 FR 58111 (October 6, 2008) (''*Order*'').

[3] *See Initiation of Antidumping and Countervailing Duty Administrative Reviews,* 80 FR 75657 (December 3, 2015).

[4] *Id.*

[5] *See* Letter to the Secretary of Commerce from Petitioner ''Seventh Administrative Review of Steel Wire Garment Hangers from China—Petitioner's Withdrawal of Review Request'' (December 16, 2015).

[6] *See* Memorandum from Christian Marsh, Deputy Assistant Secretary for Antidumping and Countervailing Duty Operations from Jessica Weeks ''Steel Wire Garment Hangers From the People's Republic of China (''PRC''): Extension of Deadline for Preliminary Results of Antidumping Duty Administrative Review'' (June 2,2016).

[7] *See* Memorandum for the Record from Ron Lorentzen, Acting Assistant Secretary for Enforcement and Compliance, ''Tolling of Administrative Deadlines as a Result of the Government Closure during Snowstorm 'Jonas,'" (January 27, 2016).

[8] *Id.*

Scope of the Order

The merchandise subject to the *Order* is steel wire garment hangers. The products are currently classifiable under the Harmonized Tariff Schedule of the United States (''HTSUS'') subheadings: 7326.20.0020, 7323.99.9060, and 7323.99.9080. Although the HTSUS subheadings are provided for convenience and customs purposes, the written product description of the scope of the order remains dispositive.[9]

Separate Rates

The Department preliminarily determines that information [10] placed on the record by Shanghai Wells Hanger Co., Ltd. and Hong Kong Wells Ltd.[11] demonstrates that these companies are entitled to separate rate status. For additional information, *see* the Preliminary Decision Memorandum.

PRC-Wide Entity

The Department's policy regarding conditional review of the PRC-wide entity applies to this administrative review.[12] Under this policy, the PRC-wide entity will not be under review unless a party specifically requests, or the Department self-initiates, a review of the entity. Because no party requested a review of the PRC-wide entity in this review, the entity is not under review and the entity's rate is not subject to change, (*i.e.,* 187.25 percent).[13]

Methodology

The Department is conducting this review in accordance with section 751(a)(1)(B) of the Tariff Act of 1930, as amended (''the Act''). The Department calculated constructed export prices and export prices in accordance with section 772 of the Act. Because the PRC is a nonmarket economy (''NME'') within the meaning of section 771(18) of the Act, normal value is calculated in accordance with section 773(c) of the Act.

For a full description of the methodology underlying our conclusions, *see* the Preliminary Decision Memorandum. A list of the topics included in the Preliminary Decision Memorandum is included as an appendix to this notice. The Preliminary Decision Memorandum is a public document and is on file electronically via Enforcement and Compliance's Antidumping and Countervailing Duty Centralized Electronic Service System (''ACCESS''). ACCESS is available to registered users at *https://access.trade.gov* and to all parties in the Central Records Unit, room B8024 of the main Department of Commerce building. In addition, a complete version of the Preliminary Decision Memorandum is available at *http://enforcement.trade.gov/frn/.* The signed Preliminary Decision Memorandum and the electronic versions of the Preliminary Decision Memorandum are identical in content.

Preliminary Results of Review

The Department preliminarily determines that the following weighted-average dumping margin exists for the POR from October 1, 2014, through September 30, 2015:

Exporter	Weighted-average dumping margin (percent)
Shanghai Wells Hanger Co., Ltd./Hong Kong Wells Ltd.[14]	49.40

Disclosure, Public Comment and Opportunity To Request a Hearing

The Department intends to disclose the calculations used in our analysis to parties in this review within five days of the date of any public announcement of this notice in accordance with 19 CFR 351.224(b).

Interested parties may submit case briefs within 30 days after the date of publication of these preliminary results of review in the **Federal Register**.[15] Rebuttals to case briefs, which must be limited to issues raised in the case briefs, must be filed within five days after the time limit for filing case briefs.[16] Parties who submit arguments are requested to submit with the argument: (a) A statement of the issue (b) a brief summary of the argument, and (c) a table of authorities.[17] Parties submitting briefs should do so pursuant to the Department's electronic filing system, ACCESS.[18]

Any interested party may request a hearing within 30 days of publication of this notice.[19] Hearing requests should contain the following information: (1) The party's name, address, and telephone number; (2) the number of participants; and (3) a list of the issues to be discussed. Oral presentations will be limited to issues raised in the briefs.[20] Parties requesting a hearing should do so pursuant to the Department's electronic filing system, ACCESS.[21] If a party requests a hearing, the Department will inform parties of the scheduled date for the hearing which will be held at the U.S. Department of Commerce, 14th Street and Constitution Avenue NW., Washington, DC 20230, at a time and location to be determined.[22]

Unless otherwise extended, the Department intends to issue the final results of this administrative review, which will include the results of our analysis of all issues raised in parties' case briefs, within 120 days of publication of these preliminary results in the **Federal Register**, pursuant to section 751(a)(3)(A) of the Act.

Assessment Rates

Upon issuance of the final results, pursuant to section 751(a)(2)(C) of the Act and 19 CFR 351.212(b), the Department will determine, and CBP shall assess, antidumping duties on all appropriate entries covered by this

[9] *See* Memorandum to Paul Piquado, Assistant Secretary for Enforcement and Compliance, from Christian Marsh, Deputy Assistant Secretary for Antidumping and Countervailing Duty Operations, regarding ''Decision Memorandum for the Preliminary Results of the Antidumping Duty Administrative Review of Steel Wire Garment Hangers From the People's Republic of China; 2014–2015,'' dated concurrently with and hereby adopted by this notice, (''Preliminary Decision Memorandum'') for a complete description of the scope of the *Order.*

[10] *See* Shanghai Wells' Section A questionnaire response, dated January 5, 2016 at pages 2–10.

[11] In the first administrative review of the *Order,* the Department found that Shanghai Wells Hanger Co., Ltd. and Hong Kong Wells Ltd. are a single entity and, because there were no changes to the facts that supported that decision since that determination was made, we continue to find that these companies are part of a single entity for this administrative review. *See Steel Wire Garment Hangers From the People's Republic of China: Preliminary Results and Preliminary Rescission, in Part, of the First Antidumping Duty Administrative Review,* 75 FR 68758, 68761 (November 9, 2010), unchanged in *First Administrative Review of Steel Wire Garment Hangers From the People's Republic of China: Final Results and Final Partial Rescission of Antidumping Duty Administrative Review,* 76 FR 27994, 27996 (May 13, 2011); *see also Steel Wire Garment Hangers from the People's Republic of China: Final Results of Antidumping Duty Administrative Review,* 2013–2014, 80 FR 69942 (November 2, 2015).

[12] *See Antidumping Proceedings: Announcement of Change in Department Practice for Respondent Selection in Antidumping Duty Proceedings and Conditional Review of the Nonmarket Economy Entity in NME Antidumping Duty Proceedings,* 78 FR 65963 (November 4, 2013).

[13] *See Steel Wire Garment Hangers From the People's Republic of China: Final Results of Antidumping Duty Administrative Review, 2012–2013,* 80 FR 13332, and accompanying Issues and Decision Memorandum (March 13, 2015) (''*5th AR Hangers Final Results*'').

[14] As previously stated, we continue to find Shanghai Wells Hanger Co., Ltd. and Hong Kong Wells Ltd. (collectively ''Shanghai Wells'') to be a single entity.

[15] *See* 19 CFR 351.309(c)(1)(ii).

[16] *See* 19 CFR 351.309(d)(1)–(2).

[17] *See* 19 CFR 351.309(c)(2) and (d)(2).

[18] *See* 19 CFR 351.303 (for general filing requirements).

[19] *See* 19 CFR 351.310(c).

[20] *Id.*

[21] *See* 19 CFR 351.303 (for general filing requirements).

[22] *See* 19 CFR 351.310(d).

review. The Department intends to issue assessment instructions to CBP 15 days after the publication date of the final results of this review.

For any individually examined respondent whose weighted-average dumping margin is above the *de minimis* threshold (*i.e.,* 0.50 percent), the Department will calculate importer-specific *ad valorem* assessment rates on the basis of the ratio of the total amount of dumping calculated for the importer's examined sales and the total entered value of sales. Where either the respondent's weighted-average dumping margin is zero or *de minimis,* or an importer-specific *ad valorem* assessment rate is zero or *de minimis,* we will instruct CBP to liquidate the appropriate entries without regard to antidumping duties.

In these preliminary results, the Department applied the assessment rate calculation method adopted in *Final Modification for Reviews, i.e.,* on the basis of monthly average-to-average comparisons using only the transactions associated with that importer with offsets being provided for non-dumped comparisons.[23]

Pursuant to a refinement in the Department's NME practice, for sales that were not reported in the U.S. sales data submitted by companies individually examined during this review, the Department will instruct CBP to liquidate entries associated with those sales at the rate for the PRC-wide entity. In addition, if the Department determines that an exporter under review had no shipments of the subject merchandise, any suspended entries that entered under that exporter's case number (*i.e.,* at that exporter's cash deposit rate) will be liquidated at the rate for the PRC-wide entity.[24]

Cash Deposit Requirements

The following cash deposit requirements will be effective upon publication of the final results of this administrative review for all shipments of the subject merchandise from the PRC entered, or withdrawn from warehouse, for consumption on or after the publication date, as provided by section 751(a)(2)(C) of the Act: (1) For the company listed above, the cash deposit rate will be established in the final results of this review (except, if the rate is zero or *de minimis,* then zero cash deposit will be required); (2) for previously investigated or reviewed PRC and non-PRC exporters not listed above that have separate rates, the cash deposit rate will continue to be the exporter-specific rate published for the most recently completed segment of this proceeding in which they were reviewed; (3) for all PRC exporters of subject merchandise that have not been found to be entitled to a separate rate, the cash deposit rate will be equal to the weighted-average dumping margin for the PRC-wide entity (*i.e.,* 187.25 percent); and (4) for all non-PRC exporters of subject merchandise which have not received their own separate rate, the cash deposit rate will be the rate applicable to the PRC exporter(s) that supplied that non-PRC exporter. These cash deposit requirements, when imposed, shall remain in effect until further notice.

Notification to Importers

This notice also serves as a preliminary reminder to importers of their responsibility under 19 CFR 351.402(f)(2) to file a certificate regarding the reimbursement of antidumping duties prior to liquidation of the relevant entries during this review period. Failure to comply with this requirement could result in the Department's presumption that reimbursement of antidumping duties occurred and the subsequent assessment of double antidumping duties.

Notification to Interested Parties

This administrative review and notice is issued and published in accordance with sections 751(a)(1) and 777(i)(1) of the Act, and 19 CFR 351.221(b)(4) and 19 CFR 351.213.

Dated: November 4, 2016

Paul Piquado,

Assistant Secretary for Enforcement and Compliance.

Attachment—List of Topics Discussed in the Preliminary Decision Memorandum

1. Summary
2. Background
3. Scope of the Order
4. Discussion of the Methodology
   a. NME Country Status
   b. Separate Rates
   c. Separate Rates Recipients- Wholly Foreign Owned
   d. Surrogate Country and Surrogate Value Data
   e. Surrogate Country
   f. Date of Sale
   g. Comparisons to Normal Value
   h. Results of Differential Pricing Analysis
   i. U.S. Price
   j. Value-Added Tax
   k. Normal Value
   l. Factor Valuation Methodology
   m. Currency Conversion
5. Conclusion

[FR Doc. 2016–27345 Filed 11–10–16; 8:45 am]

BILLING CODE 3510–DS–P

[23] *See Antidumping Proceeding: Calculation of the Weighted-Average Dumping Margin and Assessment Rate in Certain Antidumping Proceedings; Final Modification,* 77 FR 8101, 8103 (February 14, 2012) (''*Final Modification for Reviews*'').

[24] For a full discussion of this practice, *see Assessment Practice Refinement,* 76 FR at 65694 (October 24, 2011).

DEPARTMENT OF COMMERCE

International Trade Administration

[A–427–828]

Certain Carbon and Alloy Steel Cut-To-Length Plate From France: Preliminary Determination of Sales at Less Than Fair Value and Postponement of Final Determination

AGENCY: Enforcement and Compliance, International Trade Administration, Department of Commerce.

SUMMARY: The Department of Commerce (the Department) preliminarily determines that certain carbon and alloy steel cut-to-length plate (CTL plate) from France is being, or is likely to be, sold in the United States at less than fair value (LTFV). The period of investigation (POI) is April 1, 2015, through March 31, 2016. The estimated weighted-average dumping margins of sales at LTFV are shown in the ''Preliminary Determination'' section of this notice. Interested parties are invited to comment on this preliminary determination.

DATES: Effective November 14, 2016.

FOR FURTHER INFORMATION CONTACT: Terre Keaton Stefanova or Brandon Custard, AD/CVD Operations, Office II, Enforcement and Compliance, International Trade Administration, U.S. Department of Commerce, 1401 Constitution Avenue NW., Washington, DC 20230; telephone: (202) 482–1280 or (202) 482–1823, respectively.

SUPPLEMENTARY INFORMATION:

Background

The Department initiated this investigation on April 28, 2016.[1] We selected two mandatory respondents in this investigation, Dillinger France S.A. (Dillinger) and Industeel France S.A. (Industeel). For a complete description of the events that followed the initiation of this investigation, *see* the memorandum that is dated concurrently

[1] *See Certain Carbon and Alloy Steel Cut-To-Length Plate From Austria, Belgium, Brazil, France, the Federal Republic of Germany, Italy, Japan, the Republic of Korea, the People's Republic of China, South Africa, Taiwan, and the Republic of Turkey: Initiation of Less-Than-Fair Value Investigations,* 81 FR 27089 (May 5, 2016) (*Initiation Notice*).

with this determination, and hereby adopted by, this notice.[2] A list of topics in the Preliminary Decision Memorandum is included as Appendix II to this notice.

The Preliminary Decision Memorandum is a public document and is made available to the public via Enforcement and Compliance's Antidumping and Countervailing Duty Centralized Electronic Service System (ACCESS). ACCESS is available to registered users at *https://access.trade.gov*, and is available to all parties in the Department's Central Records Unit, Room B8024 of the main Department of Commerce building. In addition, a complete version of the Preliminary Decision Memorandum can be accessed directly on the Internet at *http://enforcement.trade.gov/frn/.* The signed Preliminary Decision Memorandum and the electronic version of the Preliminary Decision Memorandum are identical in content.

Scope of the Investigation

The product covered by this investigation is CTL plate from France. For a full description of the scope of this investigation, *see* the ''Scope of the Investigation,'' in Appendix I of this notice.

Scope Comments

In accordance with the *Preamble* to the Department's regulations,[3] the *Initiation Notice* set aside a period of time for parties to raise issues regarding product coverage, *i.e.*, scope.[4] Certain interested parties commented on the scope of the concurrent CTL plate investigations as it appeared in the *Initiation Notice.* For a summary of the product coverage comments and rebuttal responses submitted to the records of this and the concurrent CTL plate investigations, and a discussion and analysis of all comments timely received, *see* the Department's Preliminary Scope Decision Memorandum and the Department's Additional Preliminary Scope Decision Memorandum.[5] The Department has preliminarily modified the scope language as it appeared in the *Initiation Notice* to clarify the exclusion for stainless steel plate, corrected two tariff numbers that were misidentified in the Petitions and in the *Initiation Notice*, and modified language pertaining to existing steel plate and hot-rolled flat-rolled steel orders.[6]

Methodology

The Department is conducting this investigation in accordance with section 731 of the Act. Export price and, where appropriate, constructed export price are calculated in accordance with section 772 of the Tariff Act of 1930, as amended (the Act). Normal value (NV) is calculated in accordance with section 773 of the Act. For a full description of the methodology underlying our preliminary conclusions, *see* the Preliminary Decision Memorandum.

All-Others Rate

Consistent with sections 733(d)(1)(A)(ii) and 735(c)(5) of the Act, the Department also calculated an estimated all-others rate. Section 735(c)(5)(A) of the Act provides that the estimated all-others rate shall be an amount equal to the weighted average of the estimated weighted-average dumping margins established for exporters and producers individually investigated, excluding any zero and *de minimis* margins, and any margins determined entirely under section 776 of the Act.

In this investigation, we cannot apply our normal methodology of calculating a weighted-average margin due to requests to protect business-proprietary information. Therefore, we based our calculation of the all-others rate on the simple average of the margins calculated for Dillinger and Industeel. For further discussion of this calculation, *see* the memorandum entitled ''Certain Carbon and Alloy Steel Cut-to-Length Plate from France: Calculation of the Preliminary Margin for All Other Companies,'' dated concurrently with this notice.

Preliminary Determination

The Department preliminarily determines that CTL plate from France is being, or is likely to be, sold in the United States at LTFV, pursuant to section 733 of the Act, and that the following estimated weighted-average dumping margins exist:

Exporter/Manufacturer	Weighted-average dumping margin (percent)
Dillinger France S.A.	12.97
Industeel France S.A.	4.26
All Others	8.62

Suspension of Liquidation

In accordance with section 733(d)(2) of the Act, we will direct U.S. Customs and Border Protection (CBP) to suspend liquidation of all entries of subject merchandise from France, as described in Appendix I of this notice, which are entered, or withdrawn from warehouse, for consumption on or after the date of publication of this notice in the **Federal Register**.

Pursuant to section 733(d) of the Act and 19 CFR 351.205(d), we will instruct CBP to require cash deposits[7] equal to the weighted-average amount by which the NV exceeds U.S. price, as indicated in the chart above, as follows: (1) The rate for the mandatory respondents listed above will be the respondent-specific rates we determined in this preliminary determination; (2) if the exporter is not a mandatory respondent identified above, but the producer is, the rate will be the specific rate established for the producer of the subject merchandise; and (3) the rate for all other producers or exporters will be the all-others rate. These suspension of liquidation instructions will remain in effect until further notice.

Disclosure

We intend to disclose the calculations performed to interested parties in this proceeding within five days of the public announcement of this preliminary determination in accordance with 19 CFR 351.224(b).

[2] *See* Memorandum from Christian Marsh, Deputy Assistant Secretary for Antidumping and Countervailing Duty Operations, to Paul Piquado, Assistant Secretary for Enforcement and Compliance, entitled, ''Decision Memorandum for the Preliminary Determination in the Antidumping Duty Investigation of Certain Carbon and Alloy Steel Cut-To-Length Plate From France'' (Preliminary Decision Memorandum), dated concurrently with this notice.

[3] *See Antidumping Duties; Countervailing Duties; Final rule*, 62 FR 27296, 27323 (May 19, 1997) (*Preamble*).

[4] *See Initiation Notice*, 81 FR at 27090.

[5] *See* Memorandum to Christian Marsh, Deputy Assistant Secretary for Antidumping and Countervailing Duty Operations, entitled, ''Certain Carbon and Alloy Steel Cut-to-Length Plate From Austria, Belgium, Brazil, the People's Republic of China, France, the Federal Republic of Germany, Italy, Japan, the Republic of Korea, the Republic of South Africa, Taiwan, and Turkey: Scope Comments Decision Memorandum for the Preliminary Determinations,'' dated September 6, 2016 (Preliminary Scope Decision Memorandum), and Memorandum to Christian Marsh, Deputy Assistant Secretary for Antidumping and Countervailing Duty Operations, entitled, ''Certain Carbon and Alloy Steel Cut-to-Length Plate From Austria, Belgium, Brazil, the People's Republic of China, France, the Federal Republic of Germany, Italy, Japan, the Republic of Korea, the Republic of South Africa, Taiwan, and Turkey: Additional Scope Comments Preliminary Decision Memorandum and Extension of Deadlines for Scope Case Briefs and Scope Rebuttal Briefs,'' dated October 13, 2016 (Additional Preliminary Scope Decision Memorandum), respectively.

[6] *See* Preliminary Scope Decision Memorandum at 2 and 56, and Additional Preliminary Scope Decision Memorandum at 10–11 and 20.

[7] *See Modification of Regulations Regarding the Practice of Accepting Bonds During the Provisional Measures Period in Antidumping and Countervailing Duty Investigations*, 76 FR 61042 (October 3, 2011).

Verification

As provided in section 782(i) of the Act, we intend to verify information relied upon in making our final determination.

Public Comment

Interested parties are invited to comment on this preliminary determination. Case briefs or other written comments may be submitted to the Assistant Secretary for Enforcement and Compliance no later than seven days after the date on which the final verification report is issued in this proceeding, and rebuttal briefs, limited to issues raised in case briefs, may be submitted no later than five days after the deadline date for case briefs.[8] Pursuant to 19 CFR 351.309(c)(2) and (d)(2), parties who submit case briefs or rebuttal briefs in this proceeding are encouraged to submit with each argument: (1) A statement of the issue; (2) a brief summary of the argument; and (3) a table of authorities.

The Department established separate deadlines for interested parties to provide comments on scope issues.[9] Specifically, case briefs on scope issues were to be submitted no later than October 21, 2016. Scope rebuttal briefs, limited to issues raised in the scope case briefs, were to be submitted no later than November 1, 2016.[10] The Department explained that parties should limit comments on scope issues to their scope case brief and their scope rebuttal brief.[11] Thus, comments on scope issues belong in parties' scope case briefs and scope rebuttal briefs only and not in other case briefs and rebuttal briefs submitted in this investigation. The Department intends to address parties' scope comments in a final scope memorandum.

Pursuant to 19 CFR 351.310(c), interested parties who wish to request a hearing must submit a written request to the Assistant Secretary for Enforcement and Compliance, U.S. Department of Commerce within 30 days after the date of publication of this notice. Requests should contain the party's name, address, and telephone number, the number of participants, and a list of the issues to be discussed. If a request for a hearing is made, the Department intends to hold the hearing at the U.S. Department of Commerce, 1401 Constitution Avenue NW., Washington, DC 20230, at a time and date to be determined. Parties should confirm by telephone the date, time, and location of the hearing two days before the scheduled date.

All documents must be filed electronically using ACCESS. An electronically-filed request must be received successfully in its entirety by ACCESS by 5:00 p.m. Eastern Standard Time.

Postponement of Final Determination and Extension of Provisional Measures

Section 735(a)(2) of the Act provides that a final determination may be postponed until not later than 135 days after the date of the publication of the preliminary determination if, in the event of an affirmative preliminary determination, a request for such postponement is made by exporters who account for a significant proportion of exports of the subject merchandise, or in the event of a negative preliminary determination, a request for such postponement is made by the petitioner. 19 CFR 351.210(e)(2) requires that requests by respondents for postponement of a final determination be accompanied by a request for extension of provisional measures from a four-month period to a period not more than six months in duration.

Respondents Dillinger and Industeel have requested that, in the event of an affirmative preliminary determination in this investigation, the Department postpone its final determination by 60 days, *i.e.*, to 135 days after publication of the preliminary determination.[12] Further, Industeel agreed to extend the application of the provisional measures prescribed under section 733(d) of the Act and 19 CFR 351.210(e)(2), from a four-month period to a period not to exceed six months.

In accordance with section 735(a)(2)(A) of the Act and 19 CFR 351.210(b)(2)(ii), because (1) our preliminary determination is affirmative; (2) Industeel accounts for a significant proportion of exports of the subject merchandise; and (3) no compelling reasons for denial exist, we are postponing the final determination until no later than 135 days after the publication of this notice in the **Federal Register** and extending the provisional measures from a four-month period to a period not greater than six months. Accordingly, we will issue our final determination no later than 135 days after the date of publication of this preliminary determination, pursuant to section 735(a)(2) of the Act.[13]

International Trade Commission (ITC) Notification

In accordance with section 733(f) of the Act, we are notifying the ITC of our affirmative preliminary determination of sales at LTFV. If our final determination is affirmative, the ITC will determine before the later of 120 days after the date of this preliminary determination or 45 days after our final determination whether these imports are materially injuring, or threaten material injury to, the U.S. industry.

This determination is issued and published in accordance with sections 733(f) and 777(i)(1) of the Act and 19 CFR 351.205(c).

Dated: November 4, 2016.

Paul Piquado,

Assistant Secretary for Enforcement and Compliance.

Appendix I—Scope of the Investigation

The products covered by this investigation are certain carbon and alloy steel hot-rolled or forged flat plate products not in coils, whether or not painted, varnished, or coated with plastics or other non-metallic substances (cut-to-length plate). Subject merchandise includes plate that is produced by being cut-to-length from coils or from other discrete length plate and plate that is rolled or forged into a discrete length. The products covered include (1) Universal mill plates (*i.e.*, flat-rolled products rolled on four faces or in a closed box pass, of a width exceeding 150 mm but not exceeding 1250 mm, and of a thickness of not less than 4 mm, which are not in coils and without patterns in relief), and (2) hot-rolled or forged flat steel products of a thickness of 4.75 mm or more and of a width which exceeds 150 mm and measures at least twice the thickness, and which are not in coils, whether or not with patterns in relief. The covered products described above may be rectangular, square, circular or other shapes and include products of either rectangular or non-rectangular cross-section where such non-rectangular cross-section is achieved subsequent to the rolling process, *i.e.*, products which have been ''worked after rolling'' (*e.g.*, products which have been beveled or rounded at the edges).

For purposes of the width and thickness requirements referenced above, the following rules apply:

[8] *See* 19 CFR 351.309; *see also* 19 CFR 351.303 (for general filing requirements).

[9] *See* Preliminary Scope Decision Memorandum; Additional Preliminary Scope Decision Memorandum; Memorandum to the File, entitled, ''Deadlines for Submitting Scope Case Briefs and Scope Rebuttal Briefs,'' dated October 18, 2016 (Deadline Memo for Scope Briefs); and Memorandum to the File ''Extension of Deadline for Submitting Scope Rebuttal Briefs,'' dated October 28, 2016 (Extension Memo for Scope Rebuttal Briefs).

[10] *See* Deadline Memo for Scope Briefs and Extension Memo for Scope Rebuttal Briefs.

[11] *See, e.g.*, Deadline Memo for Scope Briefs.

[12] *See* letter from Dillinger entitled, ''Certain Carbon and Alloy Steel Cut-To-Length Plate From France: Request for Extension of Final Determination,'' dated October 17, 2016; and Letter from Industeel entitled, ''Certain Carbon and Alloy Steel Cut-To-Length Plate From France: Request for Postponement of Final Determination,'' dated October 13, 2016.

[13] *See* 19 CFR 351.210(b)(2) and (e).

(1) Except where otherwise stated where the nominal and actual thickness or width measurements vary, a product from a given subject country is within the scope if application of either the nominal or actual measurement would place it within the scope based on the definitions set forth above; and

(2) where the width and thickness vary for a specific product (*e.g.*, the thickness of certain products with non-rectangular cross-section, the width of certain products with non-rectangular shape, *etc.*), the measurement at its greatest width or thickness applies.

Steel products included in the scope of this investigation are products in which: (1) Iron predominates, by weight, over each of the other contained elements; and (2) the carbon content is 2 percent or less by weight.

Subject merchandise includes cut-to-length plate that has been further processed in the subject country or a third country, including but not limited to pickling, oiling, levelling, annealing, tempering, temper rolling, skin passing, painting, varnishing, trimming, cutting, punching, beveling, and/or slitting, or any other processing that would not otherwise remove the merchandise from the scope of the investigation if performed in the country of manufacture of the cut-to-length plate.

All products that meet the written physical description, are within the scope of this investigation unless specifically excluded or covered by the scope of an existing order. The following products are outside of, and/or specifically excluded from, the scope of this investigation:

(1) Products clad, plated, or coated with metal, whether or not painted, varnished or coated with plastic or other non-metallic substances;

(2) military grade armor plate certified to one of the following specifications or to a specification that references and incorporates one of the following specifications:

- MIL–A–12560,
- MIL–DTL–12560H,
- MIL–DTL–12560J,
- MIL–DTL–12560K,
- MIL–DTL–32332,
- MIL–A–46100D,
- MIL–DTL–46100–E,
- MIL–46177C,
- MIL–S–16216K Grade HY80,
- MIL–S–16216K Grade HY100,
- MIL–S–24645A HSLA–80;
- MIL–S–24645A HSLA–100,
- T9074–BD–GIB–010/0300 Grade HY80,
- T9074–BD–GIB–010/0300 Grade HY100,
- T9074–BD–GIB–010/0300 Grade HSLA80,
- T9074–BD–GIB–010/0300 Grade HSLA100, and
- T9074–BD–GIB–010/0300 Mod. Grade HSLA115,

except that any cut-to-length plate certified to one of the above specifications, or to a military grade armor specification that references and incorporates one of the above specifications, will not be excluded from the scope if it is also dual- or multiple-certified to any other non-armor specification that otherwise would fall within the scope of this order;

(3) stainless steel plate, containing 10.5 percent or more of chromium by weight and not more than 1.2 percent of carbon by weight;

(4) CTL plate meeting the requirements of ASTM A–829, Grade E 4340 that are over 305 mm in actual thickness;

(5) Alloy forged and rolled CTL plate greater than or equal to 152.4 mm in actual thickness meeting each of the following requirements:

(a) Electric furnace melted, ladle refined & vacuum degassed and having a chemical composition (expressed in weight percentages):

- Carbon 0.23–0.28,
- Silicon 0.05–0.20,
- Manganese 1.20–1.60,
- Nickel not greater than 1.0,
- Sulfur not greater than 0.007,
- Phosphorus not greater than 0.020,
- Chromium 1.0–2.5,
- Molybdenum 0.35–0.80,
- Boron 0.002–0.004,
- Oxygen not greater than 20 ppm,
- Hydrogen not greater than 2 ppm, and
- Nitrogen not greater than 60 ppm;

(b) With a Brinell hardness measured in all parts of the product including mid thickness falling within one of the following ranges:

(i) 270–300 HBW,

(ii) 290–320 HBW, or (iii) 320–350HBW;

(c) Having cleanliness in accordance with ASTM E45 method A (Thin and Heavy): A not exceeding 1.5, B not exceeding 1.0, C not exceeding 0.5, D not exceeding 1.5; and

(d) Conforming to ASTM A578–S9 ultrasonic testing requirements with acceptance criteria 2 mm flat bottom hole;

(6) Alloy forged and rolled steel CTL plate over 407 mm in actual thickness and meeting the following requirements:

(a) Made from Electric Arc Furnace melted, Ladle refined & vacuum degassed, alloy steel with the following chemical composition (expressed in weight percentages):

- Carbon 0.23–0.28,
- Silicon 0.05–0.15,
- Manganese 1.20–1.50,
- Nickel not greater than 0.4,
- Sulfur not greater than 0.010,
- Phosphorus not greater than 0.020,
- Chromium 1.20–1.50,
- Molybdenum 0.35–0.55,
- Boron 0.002–0.004,
- Oxygen not greater than 20 ppm,
- Hydrogen not greater than 2 ppm, and
- Nitrogen not greater than 60 ppm;

(b) Having cleanliness in accordance with ASTM E45 method A (Thin and Heavy): A not exceeding 1.5, B not exceeding 1.5, C not exceeding 1.0, D not exceeding 1.5;

(c) Having the following mechanical properties:

(i) With a Brinell hardness not more than 237 HBW measured in all parts of the product including mid thickness; and having a Yield Strength of 75ksi min and UTS 95ksi or more, Elongation of 18% or more and Reduction of area 35% or more; having charpy V at −75 degrees F in the longitudinal direction equal or greater than 15 ft. lbs (single value) and equal or greater than 20 ft. lbs (average of 3 specimens) and conforming to the requirements of NACE MR01–75; or

(ii) With a Brinell hardness not less than 240 HBW measured in all parts of the product including mid thickness; and having a Yield Strength of 90 ksi min and UTS 110 ksi or more, Elongation of 15% or more and Reduction of area 30% or more; having charpy V at −40 degrees F in the longitudinal direction equal or greater than 21 ft. lbs (single value) and equal or greater than 31 ft. lbs (average of 3 specimens);

(d) Conforming to ASTM A578–S9 ultrasonic testing requirements with acceptance criteria 3.2 mm flat bottom hole; and

(e) Conforming to magnetic particle inspection in accordance with AMS 2301;

(7) Alloy forged and rolled steel CTL plate over 407 mm in actual thickness and meeting the following requirements:

(a) Made from Electric Arc Furnace melted, ladle refined & vacuum degassed, alloy steel with the following chemical composition (expressed in weight percentages):

- Carbon 0.25–0.30,
- Silicon not greater than 0.25,
- Manganese not greater than 0.50,
- Nickel 3.0–3.5,
- Sulfur not greater than 0.010,
- Phosphorus not greater than 0.020,
- Chromium 1.0–1.5,
- Molybdenum 0.6–0.9,
- Vanadium 0.08 to 0.12
- Boron 0.002–0.004,
- Oxygen not greater than 20 ppm,
- Hydrogen not greater than 2 ppm, and
- Nitrogen not greater than 60 ppm.

(b) Having cleanliness in accordance with ASTM E45 method A (Thin and Heavy): A not exceeding 1.0(t) and 0.5(h), B not exceeding 1.5(t) and 1.0(h), C not exceeding 1.0(t) and 0.5(h), and D not exceeding 1.5(t) and 1.0(h);

(c) Having the following mechanical properties: A Brinell hardness not less than 350 HBW measured in all parts of the product including mid thickness; and having a Yield Strength of 145ksi or more and UTS 160ksi or more, Elongation of 15% or more and Reduction of area 35% or more; having charpy V at −40 degrees F in the transverse direction equal or greater than 20 ft. lbs (single value) and equal or greater than 25 ft. lbs (average of 3 specimens);

(d) Conforming to ASTM A578–S9 ultrasonic testing requirements with acceptance criteria 3.2 mm flat bottom hole; and

(e) Conforming to magnetic particle inspection in accordance with AMS 2301.

The products subject to the investigation are currently classified in the Harmonized Tariff Schedule of the United States (HTSUS) under item numbers: 7208.40.3030, 7208.40.3060, 7208.51.0030, 7208.51.0045, 7208.51.0060, 7208.52.0000, 7211.13.0000, 7211.14.0030, 7211.14.0045, 7225.40.1110, 7225.40.1180, 7225.40.3005, 7225.40.3050, 7226.20.0000, and 7226.91.5000.

The products subject to the investigation may also enter under the following HTSUS item numbers: 7208.40.6060, 7208.53.0000, 7208.90.0000, 7210.70.3000, 7210.90.9000, 7211.19.1500, 7211.19.2000, 7211.19.4500, 7211.19.6000, 7211.19.7590, 7211.90.0000, 7212.40.1000, 7212.40.5000, 7212.50.0000, 7214.10.0000, 7214.30.0010, 7214.30.0080, 7214.91.0015, 7214.91.0060, 7214.91.0090, 7225.11.0000, 7225.19.0000, 7225.40.5110,

7225.40.5130, 7225.40.5160, 7225.40.7000, 7225.99.0010, 7225.99.0090, 7226.11.1000, 7226.11.9060, 7226.19.1000, 7226.19.9000, 7226.91.0500, 7226.91.1530, 7226.91.1560, 7226.91.2530, 7226.91.2560, 7226.91.7000, 7226.91.8000, and 7226.99.0180.

The HTSUS subheadings above are provided for convenience and customs purposes only. The written description of the scope of the investigation is dispositive.

Appendix II—List of Topics Discussed in the Preliminary Decision Memorandum

I. Summary
II. Background
III. Period of Investigation
IV. Scope Comments
V. Discussion of the Methodology
  a. Determination of Comparison Method
  b. Results of the Differential Pricing Analysis
VI. Date of Sale
VII. Product Comparisons
VIII. Export Price/Constructed Export Price
IX. Normal Value
  a. Home Market Viability
  b. Affiliated Party Transactions and Arm's Length Test
  c. Level of Trade
  d. Cost of Production Analysis
  1. Calculation of COP
  2. Test of Comparison Market Sales Prices
  3. Results of the COP Test
  e. Calculation of NV Based on Comparison-Market Prices
  f. Price-to-Constructed Value Comparison
X. Currency Conversion
XI. Conclusion

[FR Doc. 2016–27314 Filed 11–10–16; 8:45 am]

BILLING CODE 3510–DS–P

DEPARTMENT OF COMMERCE

International Trade Administration

[A–580–887]

Certain Carbon and Alloy Steel Cut-To-Length Plate From the Republic of Korea: Affirmative Preliminary Determination of Sales at Less Than Fair Value and Postponement of Final Determination

AGENCY: Enforcement and Compliance, International Trade Administration, Department of Commerce.

SUMMARY: The Department of Commerce (the Department) preliminarily determines that certain carbon and alloy steel cut-to-length plate (CTL plate) from the Republic of Korea (Korea) is being, or is likely to be, sold in the United States at less than fair value (LTFV). The period of investigation (POI) is April 1, 2015, through March 31, 2016. The estimated weighted-average dumping margins of sales at LTFV are shown in the ''Preliminary Determination'' section of this notice. Interested parties are invited to comment on this preliminary determination.

DATES: Effective November 14, 2016.

FOR FURTHER INFORMATION CONTACT: Michael J. Heaney or Erin Kearney, AD/CVD Operations, Office VI, Enforcement and Compliance, International Trade Administration, U.S. Department of Commerce, 1401 Constitution Avenue NW., Washington, DC 20230; telephone: (202) 482–4475 or (202) 482–0167, respectively.

SUPPLEMENTARY INFORMATION:

Background

The Department initiated this investigation on April 28, 2016.[1] We selected POSCO and POSCO Daewoo International Corp. as mandatory respondents in this investigation. For a complete description of the events that followed the initiation of this investigation, *see* the memorandum that is dated concurrently with this determination and hereby adopted by this notice.[2] A list of topics in the Preliminary Decision Memorandum is included as Appendix II to this notice.

The Preliminary Decision Memorandum is a public document and is made available to the public via Enforcement and Compliance's Antidumping and Countervailing Duty Centralized Electronic Service System (ACCESS). ACCESS is available to registered users at *https://access.trade.gov,* and is available to all parties in the Department's Central Records Unit, room B8024 of the main Department of Commerce building. In addition, a complete version of the Preliminary Decision Memorandum can be accessed directly on the Internet at *http://enforcement.trade.gov/frn/.* The signed Preliminary Decisiom Memorandum and the electronic version of the Preliminary Decision Memorandum are identical in content.

Scope of the Investigation

The product covered by this investigation is CTL plate from the Republic of Korea. For a full description of the scope of this investigation, *see* the ''Scope of the Investigation,'' in Appendix I of this notice.

Scope Comments

In accordance with the *Preamble* to the Department's regulations,[3] the *Initiation Notice* set aside a period of time for parties to raise issues regarding product coverage, *i.e.,* scope.[4] Certain interested parties commented on the scope of the concurrent CTL plate investigations as it appeared in the *Initiation Notice.* For a summary of the product coverage comments and rebuttal responses submitted to the records of this and the concurrent CTL plate investigations, and a discussion and analysis of all comments timely received, *see* the Department's Preliminary Scope Decision Memorandum and the Department's Additional Preliminary Scope Decision Memorandum.[5] The Department has preliminarily modified the scope language as it appeared in the *Initiation Notice* to clarify the exclusion for stainless steel plate, corrected two tariff numbers that were misidentified in the Petitions and in the *Initiation Notice,* and modified language pertaining to existing steel plate and hot-rolled flat-rolled steel orders.[6]

Methodology

The Department is conducting this investigation in accordance with section 731 of the Tariff Act of 1930, as amended (the Act). Export price and, where appropriate, constructed export price are calculated in accordance with section 772 of the the Act. Normal value (NV) is calculated in accordance with

---

[1] *See Certain Carbon and Alloy Steel Cut-To-Length Plate From Austria, Belgium, Brazil, France, the Federal Republic of Germany, Italy, Japan, the Republic of Korea, the People's Republic of China, South Africa, Taiwan, and the Republic of Turkey: Initiation of Less-Than-Fair Value Investigations,* 81 FR 27089 (May 5, 2016) (*Initiation Notice*).

[2] *See* Memorandum from Christian Marsh, Deputy Assistant Secretary for Antidumping and Countervailing Duty Operations, to Paul Piquado, Assistant Secretary for Enforcement and Compliance, entitled ''Decision Memorandum for the Preliminary Determination in the Antidumping Duty Investigation of Certain Carbon and Alloy Steel Cut-To-Length Plate From the Republic of Korea'' (Preliminary Decision Memorandum), dated concurrently with this notice.

[3] *See Antidumping Duties; Countervailing Duties; Final rule,* 62 FR 27296, 27323 (May 19, 1997) (*Preamble*).

[4] *See Initiation Notice,* 81 FR at 27090.

[5] *See* Memorandum to Christian Marsh, Deputy Assistant Secretary for Antidumping and Countervailing Duty Operations, ''Certain Carbon and Alloy Steel Cut-to-Length Plate From Austria, Belgium, Brazil, the People's Republic of China, France, the Federal Republic of Germany, Italy, Japan, the Republic of Korea, the Republic of South Africa, Taiwan, and Turkey: Scope Comments Decision Memorandum for the Preliminary Determinations,'' dated September 6, 2016 (Preliminary Scope Decision Memorandum), and Memorandum to Christian Marsh, Deputy Assistant Secretary for Antidumping and Countervailing Duty Operations, Certain Carbon and Alloy Steel Cut-to-Length Plate From Austria, Belgium, Brazil, the People's Republic of China, France, the Federal Republic of Germany, Italy, Japan, the Republic of Korea, the Republic of South Africa, Taiwan, and Turkey: Additional Scope Comments Preliminary Decision Memorandum and Extension of Deadlines for Scope Case Briefs and Scope Rebuttal Briefs,'' dated October 13, 2016 (Additional Preliminary Scope Decision Memorandum), respectively.

[6] *See* Preliminary Scope Decision Memorandum at 2 and 56, and Additional Preliminary Scope Decision Memorandum at 10–11 and 20.

section 773 of the Act. For a full description of the methodology underlying our preliminary conclusions, *see* the Preliminary Decision Memorandum.

All-Others Rate

Consistent with sections 733(d)(1)(A)(ii) and 735(c)(5) of the Act, the Department also calculated an estimated all-others rate. Section 735(c)(5)(A) of the Act provides that the estimated all-others rate shall be an amount equal to the weighted average of the estimated weighted-average dumping margins established for exporters and producers individually investigated, excluding any zero and *de minimis* margins, and any margins determined entirely under section 776 of the Act. In this investigation, because we individually investigated only one exporter or producer, we based our calculation of the all-others rate on the weighted-average dumping margin calculated for POSCO.

Preliminary Determination

The Department preliminarily determines that CTL Palte from the Republic of Korea is being, or is likely to be, sold in the United States at LTFV, pursuant to section 733 of the Act, and that the following weighted-average dumping margins exist:

Exporter/ manufacturer	Weighted-average dumping margin (percent)
POSCO and POSCO Daewoo Corporation	6.82
All Others	6.82

Suspension of Liquidation

In accordance with section 733(d)(2) of the Act, we will direct U.S. Customs and Border Protection (CBP) to suspend liquidation of all entries of subject merchandise from the Republic of Korea, as described in Appendix I of this notice, which are entered, or withdrawn from warehouse, for consumption on or after the date of publication of this notice in the **Federal Register**.

Pursuant to section 733(d) of the Act and 19 CFR 351.205(d), we will instruct CBP to require cash deposits [7] equal to the weighted-average amount by which the NV exceeds U.S. price, as indicated in the chart above, adjusted where appropriate for export subsidies.[8] However, the preliminary determination in the concurrent countervailing duty investigation was negative.[9] Therefore, no adjustments for export subsidies will be applied to the weighted average dumping margin preliminarily calculated for POSCO, and for the all-other rates. The Department will instruct CBP to require cash deposits equal to the weighted average amount by which NV exceeds U.S. price, as indicated in the chart above, as follows: (1) The rate for the mandatory respondent listed above will be the respondent-specific rate we determined in this preliminary determination; (2) if the exporter is not a mandatory respondent identified above, but the producer is, the rate will be the specific rate established for the producer of the subject merchandise; and (3) the rate for all other producers or exporters will be the all-others rate. These suspension of liquidation instructions will remain in effect until further notice.

Disclosure

We intend to disclose the calculations performed to interested parties in this proceeding within five days of the date of publication of this notice in accordance with 19 CFR 351.224(b).

Verification

As provided in section 782(i) of the Act, we intend to verify information relied upon in making our final determination.

Public Comment

Interested parties are invited to comment on this preliminary determination. Case briefs or other written comments may be submitted to the Assistant Secretary for Enforcement and Compliance no later than seven days after the date on which the final verification report is issued in this proceeding, and rebuttal briefs, limited to issues raised in case briefs, may be submitted no later than five days after the deadline date for case briefs.[10] Pursuant to 19 CFR 351.309(c)(2) and (d)(2), parties who submit case briefs or rebuttal briefs in this proceeding are encouraged to submit with each argument: (1) A statement of the issue; (2) a brief summary of the argument; and (3) a table of authorities.

The Department established separate deadlines for interested parties to provide comments on scope issues.[11] Specifically, case briefs on scope issues were to be submitted no later than October 21, 2016. Scope rebuttal briefs, limited to issues raised in the scope case briefs, were to be submitted no later than November 1, 2016.[12] The Department explained that parties should limit comments on scope issues to their scope case brief and their scope rebuttal brief. [13] Thus, comments on scope issues belong in parties' scope case briefs and scope rebuttal briefs only and not in other case briefs and rebuttal briefs submitted in this investigation. The Department intends to address parties' scope comments in a final scope memorandum.

Pursuant to 19 CFR 351.310(c), interested parties who wish to request a hearing must submit a written request to the Assistant Secretary for Enforcement and Compliance, U.S. Department of Commerce. All documents must be filed electronically using ACCESS. An electronically-filed request must be received successfully in its entirety by ACCESS by 5:00 p.m. Eastern Time, within 30 days after the date of publication of this notice. Requests should contain the party's name, address, and telephone number, the number of participants, and a list of the issues to be discussed. If a request for a hearing is made, the Department intends to hold the hearing at the U.S. Department of Commerce, 1401 Constitution Avenue NW., Washington, DC 20230, at a time and date to be determined. Parties should confirm by telephone the date, time, and location of the hearing two days before the scheduled date.

[7] *See Modification of Regulations Regarding the Practice of Accepting Bonds During the Provisional Measures Period in Antidumping and Countervailing Duty Investigations,* 76 FR 61042 (October 3, 2011).

[8] *See* Section 772(c)(1)(C) of the Act. Unlike in administrative reviews, the Department calculates the adjustment for export subsidies in investigations not in the margin calculation program, but the cash deposit instructions issued to CBP. *See Notice of Final Determination of Sales at Lesss Than Fair Value, and Negative Determination of Sales at Less Than Fair Value, and Negative Determination of Critical Circumstances: Certain Lined Paper Products from India,* 71 FR 45012 (August 8, 2006), and accompanying Issues and Decision Memorandum at Comment 1.

[9] *See Certain Carbon and Alloy Steel Cut-to-Length Plate From the Republic of Korea: Preliminary Negative Countervailing Duty Determination and Alignment of Final Determination with Final Antidumping Duty Determination.* 81 FR 63168 (September 14, 2016).

[10] *See* 19 CFR 351.309; *see also* 19 CFR 351.303 (for general filing requirements).

[11] *See* Preliminary Scope Decision Memorandum; Additional Preliminary Scope Decision Memorandum; Memorandum to the File ''Deadlines for Submitting Scope Case Briefs and Scope Rebuttal Briefs,'' dated October 18, 2016 (''Deadline Memo for Scope Briefs''); and Memorandum to the File ''Extension of Deadline for Submitting Scope Rebuttal Briefs,'' dated October 28, 2016 (''Extension Memo for Scope Rebuttal Briefs'').

[12] *See* Deadline Memo for Scope Briefs and Extension Memo for Scope Rebuttal Briefs.

[13] *See, e.g.,* Deadline Memo for Scope Briefs.

Postponement of Final Determination and Extension of Provisional Measures

Section 735(a)(2) of the Act provides that a final determination may be postponed until not later than 135 days after the date of the publication of the preliminary determination if, in the event of an affirmative preliminary determination, a request for such postponement is made by exporters who account for a significant proportion of exports of the subject merchandise, or in the event of a negative preliminary determination, a request for such postponement is made by the petitioner. Section 351.210(e)(2) of the Department's regulations requires that requests by respondents for postponement of a final determination be accompanied by a request for extension of provisional measures from a four-month period to a period not more than six months in duration.

Respondent POSCO has requested that, in the event of an affirmative preliminary determination in this investigation, the Department postpone its final determination, *i.e.,* to 135 days after publication of the preliminary determination. Further, POSCO agreed to extend the application of the provisional measures prescribed under section 733(d) of the Act and 19 CFR 351.210(e)(2), from a four-month period to a period not to exceed six months.[14]

In accordance with section 735(a)(2)(A) of the Act and 19 CFR 351.210(b)(2)(ii), because (1) our preliminary determination is affirmative; (2) the requesting exporters account for a significant proportion of exports of the subject merchandise; and (3) no compelling reasons for denial exist, we are postponing the final determination until no later than 135 days after the publication of this notice in the **Federal Register** and extending the provisional measures from a four-month period to a period not greater than six months. Accordingly, we will issue our final determination no later than 135 days after the date of publication of this preliminary determination, pursuant to section 735(a)(2) of the Act.[15]

International Trade Commission (ITC) Notification

In accordance with section 733(f) of the Act, we are notifying the ITC of our affirmative preliminary determination of sales at LTFV. If our final determination is affirmative, the ITC will determine before the later of 120 days after the date of this preliminary determination or 45 days after our final determination whether these imports are materially injuring, or threaten material injury to, the U.S. industry.

This determination is issued and published in accordance with sections 733(f) and 777(i)(1) of the Act and 19 CFR 351.205(c).

Dated: November 4, 2016.

Paul Piquado,

Assistant Secretary for Enforcement and Compliance.

Appendix I—Scope of the Investigation

The products covered by this investigation are certain carbon and alloy steel hot-rolled or forged flat plate products not in coils, whether or not painted, varnished, or coated with plastics or other non-metallic substances (cut-to-length plate). Subject merchandise includes plate that is produced by being cut-to-length from coils or from other discrete length plate and plate that is rolled or forged into a discrete length. The products covered include (1) Universal mill plates (*i.e.,* flat-rolled products rolled on four faces or in a closed box pass, of a width exceeding 150 mm but not exceeding 1250 mm, and of a thickness of not less than 4 mm, which are not in coils and without patterns in relief), and (2) hot-rolled or forged flat steel products of a thickness of 4.75 mm or more and of a width which exceeds 150 mm and measures at least twice the thickness, and which are not in coils, whether or not with patterns in relief. The covered products described above may be rectangular, square, circular or other shapes and include products of either rectangular or non-rectangular cross-section where such non-rectangular cross-section is achieved subsequent to the rolling process, *i.e.,* products which have been ''worked after rolling'' (*e.g.,* products which have been beveled or rounded at the edges).

For purposes of the width and thickness requirements referenced above, the following rules apply:

(1) Except where otherwise stated where the nominal and actual thickness or width measurements vary, a product from a given subject country is within the scope if application of either the nominal or actual measurement would place it within the scope based on the definitions set forth above unless the product is already covered by an order existing on that specific country (*i.e., Certain Hot Rolled Steel Flat Products From Australia, Brazil, Japan, the Republic of Korea, the Netherlands, the Republic of Turkey, and the United Kingdom: Amended Final Affirmative Antidumping Determination for Australia, the Republic of Korea, and the the Republic of Turkey and Antidumping Duty Orders,* 81 FR 67962 (October 3, 2016), and

(2) where the width and thickness vary for a specific product (*e.g.,* the thickness of certain products with non-rectangular cross-section, the width of certain products with non-rectangular shape, *etc.*), the measurement at its greatest width or thickness applies.

Steel products included in the scope of this investigation are products in which: (1) Iron predominates, by weight, over each of the other contained elements; and (2) the carbon content is 2 percent or less by weight.

Subject merchandise includes cut-to-length plate that has been further processed in the subject country or a third country, including but not limited to pickling, oiling, levelling, annealing, tempering, temper rolling, skin passing, painting, varnishing, trimming, cutting, punching, beveling, and/or slitting, or any other processing that would not otherwise remove the merchandise from the scope of the investigation if performed in the country of manufacture of the cut-to-length plate.

All products that meet the written physical description, are within the scope of this investigation unless specifically excluded or covered by the scope of an existing order. The following products are outside of, and/or specifically excluded from, the scope of this investigation:

(1) Products clad, plated, or coated with metal, whether or not painted, varnished or coated with plastic or other non-metallic substances;

(2) military grade armor plate certified to one of the following specifications or to a specification that references and incorporates one of the following specifications:

- MIL–A–12560,
- MIL–DTL–12560H,
- MIL–DTL–12560J,
- MIL–DTL–12560K,
- MIL–DTL–32332,
- MIL–A–46100D,
- MIL–DTL–46100–E,
- MIL–46177C,
- MIL–S–16216K Grade HY80,
- MIL–S–16216K Grade HY100,
- MIL–S–24645A HSLA–80;
- MIL–S–24645A HSLA–100,
- T9074–BD–GIB–010/0300 Grade HY80,
- T9074–BD–GIB–010/0300 Grade HY100,
- T9074–BD–GIB–010/0300 Grade HSLA80,
- T9074–BD–GIB–010/0300 Grade HSLA100, and
- T9074–BD–GIB–010/0300 Mod. Grade HSLA115,

except that any cut-to-length plate certified to one of the above specifications, or to a military grade armor specification that references and incorporates one of the above specifications, will not be excluded from the scope if it is also dual- or multiple-certified to any other non-armor specification that otherwise would fall within the scope of this order;

(3) stainless steel plate, containing 10.5 percent or more of chromium by weight and not more than 1.2 percent of carbon by weight;

(4) CTL plate meeting the requirements of ASTM A–829, Grade E 4340 that are over 305 mm in actual thickness;

(5) Alloy forged and rolled CTL plate greater than or equal to 152.4 mm in actual thickness meeting each of the following requirements:

(a) Electric furnace melted, ladle refined & vacuum degassed and having a chemical

[14] *See* Letter from POSCO to Secretary of Commerce Re: Carbon and Alloy Steel Cut to Length Plate from Korea: Request to Postpone the Final Determination dated October 31, 2016 (POSCO Final Postponement Request).

[15] *See* 19 CFR 351.210(b)(2) and (e).

composition (expressed in weight percentages):

- Carbon 0.23–0.28,
- Silicon 0.05–0.20,
- Manganese 1.20–1.60,
- Nickel not greater than 1.0,
- Sulfur not greater than 0.007,
- Phosphorus not greater than 0.020,
- Chromium 1.0–2.5,
- Molybdenum 0.35–0.80,
- Boron 0.002–0.004,
- Oxygen not greater than 20 ppm,
- Hydrogen not greater than 2 ppm, and
- Nitrogen not greater than 60 ppm;

(b) With a Brinell hardness measured in all parts of the product including mid thickness falling within one of the following ranges:

(i) 270–300 HBW,

(ii) 290–320 HBW, or

(iii) 320–350HBW;

(c) Having cleanliness in accordance with ASTM E45 method A (Thin and Heavy): A not exceeding 1.5, B not exceeding 1.0, C not exceeding 0.5, D not exceeding 1.5; and

(d) Conforming to ASTM A578–S9 ultrasonic testing requirements with acceptance criteria 2 mm flat bottom hole;

(6) Alloy forged and rolled steel CTL plate over 407 mm in actual thickness and meeting the following requirements:

(a) Made from Electric Arc Furnace melted, Ladle refined & vacuum degassed, alloy steel with the following chemical composition (expressed in weight percentages):

- Carbon 0.23–0.28,
- Silicon 0.05–0.15,
- Manganese 1.20–1.50,
- Nickel not greater than 0.4,
- Sulfur not greater than 0.010,
- Phosphorus not greater than 0.020,
- Chromium 1.20–1.50,
- Molybdenum 0.35–0.55,
- Boron 0.002–0.004,
- Oxygen not greater than 20 ppm,
- Hydrogen not greater than 2 ppm, and
- Nitrogen not greater than 60 ppm;

(b) Having cleanliness in accordance with ASTM E45 method A (Thin and Heavy): A not exceeding 1.5, B not exceeding 1.5, C not exceeding 1.0, D not exceeding 1.5;

(c) Having the following mechanical properties:

(i) With a Brinell hardness not more than 237 HBW measured in all parts of the product including mid thickness; and having a Yield Strength of 75ksi min and UTS 95ksi or more, Elongation of 18% or more and Reduction of area 35% or more; having charpy V at −75 degrees F in the longitudinal direction equal or greater than 15 ft. lbs (single value) and equal or greater than 20 ft. lbs (average of 3 specimens) and conforming to the requirements of NACE MR01–75; or

(ii) With a Brinell hardness not less than 240 HBW measured in all parts of the product including mid thickness; and having a Yield Strength of 90 ksi min and UTS 110 ksi or more, Elongation of 15% or more and Reduction of area 30% or more; having charpy V at −40 degrees F in the longitudinal direction equal or greater than 21 ft. lbs (single value) and equal or greater than 31 ft. lbs (average of 3 specimens);

(d) Conforming to ASTM A578–S9 ultrasonic testing requirements with acceptance criteria 3.2 mm flat bottom hole; and

(e) Conforming to magnetic particle inspection in accordance with AMS 2301;

(7) Alloy forged and rolled steel CTL plate over 407 mm in actual thickness and meeting the following requirements:

(a) Made from Electric Arc Furnace melted, ladle refined & vacuum degassed, alloy steel with the following chemical composition (expressed in weight percentages):

- Carbon 0.25–0.30,
- Silicon not greater than 0.25,
- Manganese not greater than 0.50,
- Nickel 3.0–3.5,
- Sulfur not greater than 0.010,
- Phosphorus not greater than 0.020,
- Chromium 1.0–1.5,
- Molybdenum 0.6–0.9,
- Vanadium 0.08 to 0.12
- Boron 0.002–0.004,
- Oxygen not greater than 20 ppm,
- Hydrogen not greater than 2 ppm, and
- Nitrogen not greater than 60 ppm.

(b) Having cleanliness in accordance with ASTM E45 method A (Thin and Heavy): A not exceeding 1.0(t) and 0.5(h), B not exceeding 1.5(t) and 1.0(h), C not exceeding 1.0(t) and 0.5(h), and D not exceeding 1.5(t) and 1.0(h);

(c) Having the following mechanical properties: A Brinell hardness not less than 350 HBW measured in all parts of the product including mid thickness; and having a Yield Strength of 145ksi or more and UTS 160ksi or more, Elongation of 15% or more and Reduction of area 35% or more; having charpy V at −40 degrees F in the transverse direction equal or greater than 20 ft. lbs (single value) and equal or greater than 25 ft. lbs (average of 3 specimens);

(d) Conforming to ASTM A578–S9 ultrasonic testing requirements with acceptance criteria 3.2 mm flat bottom hole; and

(e) Conforming to magnetic particle inspection in accordance with AMS 2301.

At the time of the filing of the petition, there was an existing antidumping duty order on certain cut-to-length carbon-quality steel plate products from Korea. *See Notice of Final Determination of Sales at Less Than Fair Value: Certain Cut-To-Length Carbon-Quality Steel Plate Products from Korea,* 64 FR 73,196 (Dep't Commerce Dec. 29, 1999), as amended, 65 FR 6,585 (Dep't Commerce Feb 10, 2000) (1999 Korea AD Order). The scope of the antidumping duty investigation with regard to cut-to-length plate from Korea covers only (1) subject cut-to-length plate not within the physical description of cut-to-length carbon quality steel plate in the 1999 Korea AD Order, regardless of producer or exporter; and (2) cut-to-length plate produced and/or exported by those companies that were excluded or revoked from the 1999 Korea AD Order as of April 8, 2016. The only revoked or excluded company is Pohang Iron and Steel Company, also known as POSCO.

The products subject to the investigation are currently classified in the Harmonized Tariff Schedule of the United States (HTSUS) under item numbers: 7208.40.3030, 7208.40.3060, 7208.51.0030, 7208.51.0045, 7208.51.0060, 7208.52.0000, 7211.13.0000, 7211.14.0030, 7211.14.0045, 7225.40.1110, 7225.40.1180, 7225.40.3005, 7225.40.3050, 7226.20.0000, and 7226.91.5000.

The products subject to the investigation may also enter under the following HTSUS item numbers: 7208.40.6060, 7208.53.0000, 7208.90.0000, 7210.70.3000, 7210.90.9000, 7211.19.1500, 7211.19.2000, 7211.19.4500, 7211.19.6000, 7211.19.7590, 7211.90.0000, 7212.40.1000, 7212.40.5000, 7212.50.0000, 7214.10.0000, 7214.30.0010, 7214.30.0080, 7214.91.0015, 7214.91.0060, 7214.91.0090, 7225.11.0000, 7225.19.0000, 7225.40.5110, 7225.40.5130, 7225.40.5160, 7225.40.7000, 7225.99.0010, 7225.99.0090, 7226.11.1000, 7226.11.9060, 7226.19.1000, 7226.19.9000, 7226.91.0500, 7226.91.1530, 7226.91.1560, 7226.91.2530, 7226.91.2560, 7226.91.7000, 7226.91.8000, and 7226.99.0180.

The HTSUS subheadings above are provided for convenience and customs purposes only. The written description of the scope of the investigation is dispositive

Appendix II—List of Topics

Discussed in the Preliminary Decision Memorandum

1. Summary
2. Background
3. Period of Investigation
4. Preliminary Determination of Critical Circumstances
5. Postponement of Final Determination and Extension of Provisional Measures
6. Scope Comments
7. Affiliation and Collapsing
8. Discussion of the Methodology
   a. Determination of Comparison Method
   b. Results of the Differential Pricing Analysis
9. Date of Sale
10. Product Comparisons
11. Export Price/Constructed Export Price
12. Normal Value
   a. Home Market Viability
   b. Level of Trade
   c. Cost of Production Analysis
   1. Calculation of COP
   2. Test of Comparison Market Sales Prices
   3. Results of the COP Test
   d. Calculation of NV Based on Comparison-Market Prices
13. Currency Conversion
14. Conclusion

[FR Doc. 2016–27311 Filed 11–10–16; 8:45 am]

BILLING CODE 3510–DS–P

DEPARTMENT OF COMMERCE

International Trade Administration

[A–570–967, C–570–968]

Aluminum Extrusions From the People's Republic of China: Affirmative Preliminary Determination of Circumvention of the Antidumping and Countervailing Duty Orders and Intent To Rescind Minor Alterations Anti-Circumvention Inquiry

AGENCY: Enforcement and Compliance, International Trade Administration, Department of Commerce.

SUMMARY: The Department of Commerce (the Department) preliminarily determines that heat-treated extruded aluminum products that meet the chemical specifications for 5050-grade aluminum alloy, regardless of producer, exporter, or importer, constitute later-developed merchandise, and are circumventing the antidumping (AD) and countervailing duty (CVD) orders on aluminum extrusions from the People's Republic of China (PRC). The Department also preliminarily intends to rescind its minor alterations anti-circumvention.

DATES: Effective November 14, 2016.

FOR FURTHER INFORMATION CONTACT: Scott Hoefke or Erin Kearney, AD/CVD Operations, Office VI, Enforcement & Compliance, International Trade Administration, U.S. Department of Commerce, 14th Street and Constitution Avenue NW., Washington, DC, 20230; telephone: (202) 482–4947 or (202) 482–0167, respectively.

SUPPLEMENTARY INFORMATION:

Background

Based on a request from Aluminum Extrusions Fair Trade Committee (Petitioner),[1] on March 21, 2016, the Department initiated its anti-circumvention inquiry[2] pursuant to sections 781(c) and (d) of the Tariff Act of 1930, as amended (the Act) to determine whether extruded aluminum products that meet the chemical specifications for 5050-grade aluminum alloy, which are heat-treated, and are exported by China Zhongwang Holdings Ltd. and its affiliates (collectively, Zhongwang), are circumventing the AD and CVD orders on aluminum extrusions from the PRC.[3] We also indicated in our *Initiation Notice* that we intended to consider whether the inquiry should apply to all such imports of extruded aluminum products, regardless of producer, exporter, or importer, from the PRC. During the course of the proceeding, the Department issued a questionnaire to Zhongwang, who did not respond, and also received additional factual information and comments from Petitioner and Endura Products Inc., a domestic interested party.

Scope of the Orders

The merchandise covered by the *Orders* are aluminum extrusions from the People's Republic of China. The merchandise subject to the orders are currently classifiable in the Harmonized Tariff Schedule of the United States (HTSUS): 8481.90.9060, 8481.90.9085, 9031.90.9195, 8424.90.9080, 9405.99.4020, 9031.90.90.95, 7616.10.90.90, 7609.00.00, 7610.10.00, 7610.90.00, 7615.10.30, 7615.10.71, 7615.10.91, 7615.19.10, 7615.19.30, 7615.19.50, 7615.19.70, 7615.19.90, 7615.20.00, 7616.99.10, 7616.99.50, 8479.89.98, 8479.90.94, 8513.90.20, 9403.10.00, 9403.20.00, 7604.21.00.00, 7604.29.10.00, 7604.29.30.10, 7604.29.30.50, 7604.29.50.30, 7604.29.50.60, 7608.20.00.30, 7608.20.00.90, 8302.10.30.00, 8302.10.60.30, 8302.10.60.60, 8302.10.60.90, 8302.20.00.00, 8302.30.30.10, 8302.30.30.60, 8302.41.30.00, 8302.41.60.15, 8302.41.60.45, 8302.41.60.50, 8302.41.60.80, 8302.42.30.10, 8302.42.30.15, 8302.42.30.65, 8302.49.60.35, 8302.49.60.45, 8302.49.60.55, 8302.49.60.85, 8302.50.00.00, 8302.60.90.00, 8305.10.00.50, 8306.30.00.00, 8414.59.60.90, 8415.90.80.45, 8418.99.80.05, 8418.99.80.50, 8418.99.80.60, 8419.90.10.00, 8422.90.06.40, 8473.30.20.00, 8473.30.51.00, 8479.90.85.00, 8486.90.00.00, 8487.90.00.80, 8503.00.95.20, 8508.70.00.00, 8515.90.20.00, 8516.90.50.00, 8516.90.80.50, 8517.70.00.00, 8529.90.73.00, 8529.90.97.60, 8536.90.80.85, 8538.10.00.00, 8543.90.88.80, 8708.29.50.60, 8708.80.65.90, 8803.30.00.60, 9013.90.50.00, 9013.90.90.00, 9401.90.50.81, 9403.90.10.40, 9403.90.10.50, 9403.90.10.85, 9403.90.25.40, 9403.90.25.80, 9403.90.40.05, 9403.90.40.10, 9403.90.40.60, 9403.90.50.05, 9403.90.50.10, 9403.90.50.80, 9403.90.60.05, 9403.90.60.10, 9403.90.60.80, 9403.90.70.05, 9403.90.70.10, 9403.90.70.80, 9403.90.80.10, 9403.90.80.15, 9403.90.80.20, 9403.90.80.41, 9403.90.80.51, 9403.90.80.61, 9506.11.40.80, 9506.51.40.00, 9506.51.60.00, 9506.59.40.40, 9506.70.20.90, 9506.91.00.10, 9506.91.00.20, 9506.91.00.30, 9506.99.05.10, 9506.99.05.20, 9506.99.05.30, 9506.99.15.00, 9506.99.20.00, 9506.99.25.80, 9506.99.28.00, 9506.99.55.00, 9506.99.60.80, 9507.30.20.00, 9507.30.40.00, 9507.30.60.00, 9507.90.60.00, and 9603.90.80.50.

Products subject to these orders may also enter under HTSUS: 7610.10, 7610.90, 7615.19, 7615.20, and 7616.99 as well as under other HTSUS chapters. Subject merchandise may also enter under HTSUS numbers: 8418.99.80.50 and 8418.99.80.60. While HTSUS subheadings are provided for convenience and customs purposes, the written description of the scope of these *Orders* is dispositive.[4]

Merchandise Subject to the Anti-Circumvention Inquiry

The products covered by this inquiry are heat-treated extruded aluminum products that meet the chemical specifications for 5050-grade aluminum alloy (inquiry merchandise), regardless of producer, exporter, or importer, from the PRC.

Methodology

The Department has conducted this circumvention inquiry in accordance with section 781(d) of the Act and 19 CFR 351.225(j). For a full description of the methodology underlying our conclusions, *see* the Preliminary Decision Memorandum. The Preliminary Decision Memorandum is a public document and is on file electronically via Enforcement and Compliance's Antidumping and Countervailing Duty Centralized Electronic Service System (''ACCESS''). ACCESS is available to registered users at *http://access.trade.gov* and is available to all parties in the Central Records Unit, room B8024 of the main Department of Commerce building. In addition, the signed Preliminary Decision Memorandum can be accessed directly at *http://enforcement.trade.gov/frn/index.html.* The signed and electronic versions of the Preliminary Decision Memorandum are identical in content. A list of topics discussed in the Preliminary Decision Memorandum is attached as an Appendix to this notice.

Affirmative Preliminary Determination of Circumvention

Based on our analysis, as detailed in the Preliminary Decision Memorandum,

[1] *See* Letter to the Secretary from Petitioner, ''Aluminum Extrusions from the People's Republic of China: Resubmission of Circumvention Inquiry Request Pursuant to the Department's Request,'' dated December 30, 2015.

[2] *See Aluminum Extrusions from the People's Republic of China: Initiation of Anti-Circumvention Inquiry,* 81 FR 15039 (March 21, 2016) (*Initiation Notice*).

[3] *See Aluminum Extrusions from the People's Republic of China: Antidumping Duty Order,* 76 FR 30650 (May 26, 2011) *and Aluminum Extrusions from the People's Republic of China: Countervailing Duty Order,* 76 FR 30653 (May 26, 2011) (collectively, the *Orders*).

[4] A full description of the scope of the *Orders* is contained in the memorandum to Paul Piquado, Assistant Secretary for Enforcement and Compliance, from Christian Marsh, Deputy Assistant Secretary for Antidumping and Countervailing Duty Operations, titled ''Anti-Circumvention Inquiry Regarding the Antidumping Duty and Countervailing Duty Orders on Aluminum Extrusions from the People's Republic of China: Preliminary Determination Decision Memorandum'' (Preliminary Decision Memorandum), dated concurrently with, and adopted by, this notice.

we preliminarily find that all imports from the PRC of heat-treated extruded aluminum products that meet the chemical specifications for 5050-grade aluminum alloy, regardless of producer, exporter, or importer, constitute later-developed merchandise that is circumventing, and should be included within, the scope of the *Orders*.[5] In addition, if in our final determination we affirm our preliminary determination pursuant to section 781(d) of the Act, the Department intends to rescind its minor alterations anti-circumvention inquiry pursuant to section 781(c) of the Act.

Suspension of Liquidation

In accordance with 19 CFR 351.225(l)(2), the Department will direct U.S. Customs and Border Protection (CBP) to suspend liquidation of inquiry merchandise from the PRC (regardless of producer, exporter, or importer), entered, or withdrawn from warehouse, for consumption, on or after March 21, 2016, the date of publication of the initiation of this inquiry. The Department will also instruct CBP to require a cash deposit of estimated duties at the rate applicable to the exporter, on all unliquidated entries of inquiry merchandise entered, or withdrawn from warehouse, for consumption on or after March 21, 2016.

Intent To Consider Certification Requirement

In light of the Department's preliminary finding of circumvention, the Department intends to consider whether to require importers of certain aluminum extrusions who claim their merchandise is not subject to the *Orders* to maintain a certification certifying that their aluminum extrusions were not produced from heat-treated 5050 grade aluminum alloy. The Department intends to invite comments on this issue.

Notification to the International Trade Commission

As discussed in the Preliminary Decision Memorandum, because the Department has preliminarily determined, for purposes of sections 781(d)(1) and (e) of the Act, that the inquiry merchandise does not incorporate a significant technological advance or significant alteration of an earlier product, the Department is not notifying the ITC of its preliminary determination.

[5] *See* section 781(d) of the Act and 19 CFR 351.225(i).

Public Comment

The Department may solicit new factual information in this inquiry. Additionally, should a party seek to submit new factual information, the Department intends to consider requests to accept new factual information on a case-by-case basis.

The Department will invite comments on this preliminary determination and issue a memorandum establishing a briefing schedule. Interested parties may submit case briefs and rebuttal briefs within the designated timeframe outlined in the memorandum. Rebuttals to case briefs are limited to issues raised in the case briefs. Parties who submit case or rebuttal briefs are requested to submit with the argument: (a) A statement of the issue, (b) a brief summary of the argument, and (c) a table of authorities. Parties submitting briefs should do so using the Department's electronic filing system, ACCESS.

Interested parties who wish to request a hearing must submit a written request to the Assistant Secretary for Enforcement and Compliance, U.S. Department of Commerce, filed electronically using ACCESS. A written request for a hearing must be received successfully in its entirety by the Department's electronic records system, ACCESS, by 5:00 p.m. Eastern Time, within 30 days after the date of publication of this notice.[6] Hearing requests should contain the party's name, address, and telephone number, the number of participants, and a list of the issues parties intend to present at the hearing. If a request for a hearing is made, the Department intends to hold the hearing at the U.S. Department of Commerce, 14th Street and Constitution Avenue NW., Washington, DC 20230, at a time and location to be determined.

Final Determination

Pursuant to section 781(f) of the Act, the final determination with respect to this anti-circumvention inquiry, including the results of the Department's analysis of any written comments, will be issued no later than January 9, 2017, unless extended.[7]

This preliminary affirmative anti-circumvention determination is published in accordance with section 781(d) of the Act and 19 CFR 351.225.

[6] *See* 19 CFR 351.310(c).

[7] This date reflect the next business day after the 300 day deadline of January 8, 2017. *See Notice of Clarification: Application of ''Next Business Day'' Rule for Administrative Determination Deadlines Pursuant to the Tariff Act of 1930, As Amended,* 70 FR 24533 (May 10, 2005).

Dated: November 3, 2016.

Paul Piquado,

Assistant Secretary for Enforcement and Compliance.

Appendix—List of Topics Discussed in the Preliminary Decision Memorandum

I. Summary
II. Background
III. Scope of the Orders
IV. Merchandise Subject to the Anti-Circumvention Inquiry
V. Later-Developed Merchandise Anti-Circumvention Inquiry
VI. Use of Facts Available with an Adverse Inference
VII. Analysis
  A. Commercial Availability
  B. Same General Physical Characteristics
  C. Expectations of the Ultimate Purchasers and Use of Merchandise
  D. Advertisement, Display, and Channels of Trade
  E. Additional Analysis
VIII. Preliminary Determination
IX. Intent to Rescind Minor Alterations Anti-Circumvention Inquiry
X. Intent To Consider Certification Requirement
XI. Recommendation

[FR Doc. 2016–27346 Filed 11–10–16; 8:45 am]

BILLING CODE 3510–DS–P

DEPARTMENT OF COMMERCE

International Trade Administration

[A–428–844]

Certain Carbon and Alloy Steel Cut-to-Length Plate From the Federal Republic of Germany: Preliminary Determination of Sales at Less Than Fair Value and Postponement of Final Determination

AGENCY: Enforcement and Compliance, International Trade Administration, Department of Commerce.

SUMMARY: The Department of Commerce (the Department) preliminarily determines that certain carbon and alloy steel cut-to-length plate (CTL plate) from the Federal Republic of Germany (Germany) is being, or is likely to be, sold in the United States at less than fair value (LTFV). The period of investigation (POI) is April 1, 2015, through March 31, 2016. The estimated weighted-average dumping margins of sales at LTFV are shown in the ''Preliminary Determination'' section of this notice. Interested parties are invited to comment on this preliminary determination.

DATES: Effective November 14, 2016.

FOR FURTHER INFORMATION CONTACT: Ross Belliveau or David J. Goldberger, AD/CVD Operations, Office II, Enforcement and Compliance, International Trade

Administration, U.S. Department of Commerce, 1401 Constitution Avenue NW., Washington, DC 20230; telephone: (202) 482–4952 or (202) 482–4136, respectively.

SUPPLEMENTARY INFORMATION:

Background

The Department initiated this investigation on April 28, 2016.[1] For a complete description of the events that followed the initiation of this investigation, *see* the memorandum that is dated concurrently with this determination and hereby adopted by this notice.[2] A list of topics in the Preliminary Decision Memorandum is included as Appendix II to this notice.

The Preliminary Decision Memorandum is a public document and is made available to the public via Enforcement and Compliance's Antidumping and Countervailing Duty Centralized Electronic Service System (ACCESS). ACCESS is available to registered users at *https://access.trade.gov,* and is available to all parties in the Department's Central Records Unit, Room B8024 of the main Department of Commerce building. In addition, a complete version of the Preliminary Decision Memorandum can be accessed directly on the internet at *http://enforcement.trade.gov/frn/.* The signed Preliminary Decision Memorandum and the electronic version of the Preliminary Decision Memorandum are identical in content.

Scope of the Investigation

The product covered by this investigation is CTL plate from Germany. For a full description of the scope of this investigation, *see* the ''Scope of the Investigation,'' in Appendix I of this notice.

Scope Comments

In accordance with the *Preamble* to the Department's regulations,[3] the *Initiation Notice* set aside a period of time for parties to raise issues regarding product coverage, *i.e.,* scope.[4] Certain interested parties commented on the scope of the concurrent CTL plate investigations as it appeared in the *Initiation Notice.* For a summary of the product coverage comments and rebuttal responses submitted to the records of this and the concurrent CTL plate investigations, and a discussion and analysis of all comments timely received, see the Department's Preliminary Scope Decision Memorandum and the Department's Additional Preliminary Scope Decision Memorandum.[5] The Department has preliminarily modified the scope language as it appeared in the *Initiation Notice* to clarify the exclusion for stainless steel plate, corrected two tariff numbers that were misidentified in the Petitions and in the *Initiation Notice,* and modified language pertaining to existing steel plate and hot-rolled flat-rolled steel orders.[6]

Methodology

The Department is conducting this investigation in accordance with section 731 of the Act. There are two mandatory respondents participating in this investigation, AG der Dillinger Hüttenwerke (Dillinger) and Ilsenburger Grobblech GmbH, Salzgitter Mannesmann Grobblech GmbH, Salzgitter Flachstahl GmbH, and Salzgitter Mannesmann International GmbH (collectively, Salzgitter).[7] Export price and, where appropriate, constructed export price, are calculated in accordance with section 772 of the Tariff Act of 1930, as amended (the Act). Normal value (NV) is calculated in accordance with section 773 of the Act. For a full description of the methodology underlying our preliminary conclusions, *see* the Preliminary Decision Memorandum.

All-Others Rate

Consistent with sections 733(d)(1)(A)(ii) and 735(c)(5) of the Act, the Department also calculated an estimated all-others rate. Section 735(c)(5)(A) of the Act provides that the estimated all-others rate shall be an amount equal to the weighted average of the estimated weighted-average dumping margins established for exporters and producers individually investigated, excluding any zero, and *de minimis* margins, and any margins determined entirely under section 776 of the Act. Because we calculated a *de minimis* weighted average dumping margin for Salzgitter, we have based the all-others rate on the estimated weighted-average dumping margin calculated for Dillinger, the other mandatory respondent in this investigation.

Preliminary Determination

The Department preliminarily determines that CTL plate from Germany is being, or is likely to be, sold in the United States at LTFV, pursuant to section 733 of the Act, and that the following estimated weighted-average dumping margins exist:

Exporter/manufacturer	Weighted-average dumping margin (percent)
AG der Dillinger Hüttenwerke	6.56
Ilsenburger Grobblech GmbH, Salzgitter Mannesmann Grobblech GmbH, Salzgitter Flachstahl GmbH, and Salzgitter Mannesmann International GmbH	0.00
All-Others	6.56

Suspension of Liquidation

In accordance with section 733(d)(2) of the Act, we will direct U.S. Customs and Border Protection (CBP) to suspend liquidation of all entries of subject merchandise from Germany, with the exception of those produced and/or exported by Salzgitter, as described in Appendix I of this notice, which are entered, or withdrawn from warehouse, for consumption on or after the date of publication of this notice in the **Federal**

[1] *See Certain Carbon and Alloy Steel Cut-to-Length Plate From Austria, Belgium, Brazil, France, the Federal Republic of Germany, Italy, Japan, the Republic of Korea, the People's Republic of China, South Africa, Taiwan, and the Republic of Turkey: Initiation of Less-Than-Fair Value Investigations,* 81 FR 27089 (May 5, 2016) (*Initiation Notice*).

[2] *See* Memorandum from Christian Marsh, Deputy Assistant Secretary for Antidumping and Countervailing Duty Operations, to Paul Piquado, Assistant Secretary for Enforcement and Compliance, entitled ''Decision Memorandum for the Preliminary Determination in the Antidumping Duty Investigation of Certain Carbon and Alloy Steel Cut-To-Length Plate From Germany'' (Preliminary Decision Memorandum), dated concurrently with this notice.

[3] *See Antidumping Duties; Countervailing Duties; Final rule,* 62 FR 27296, 27323 (May 19, 1997) (*Preamble*).

[4] *See Initiation Notice,* 81 FR at 27090.

[5] *See* Memorandum to Christian Marsh, Deputy Assistant Secretary for Antidumping and Countervailing Duty Operations, entitled, ''Certain Carbon and Alloy Steel Cut-to-Length Plate From Austria, Belgium, Brazil, the People's Republic of China, France, the Federal Republic of Germany, Italy, Japan, the Republic of Korea, the Republic of South Africa, Taiwan, and Turkey: Scope Comments Decision Memorandum for the Preliminary Determinations,'' dated September 6, 2016 (Preliminary Scope Decision Memorandum), and Memorandum to Christian Marsh, Deputy Assistant Secretary for Antidumping and Countervailing Duty Operations, entitled, ''Certain Carbon and Alloy Steel Cut-to-Length Plate From Austria, Belgium, Brazil, the People's Republic of China, France, the Federal Republic of Germany, Italy, Japan, the Republic of Korea, the Republic of South Africa, Taiwan, and Turkey: Additional Scope Comments Preliminary Decision Memorandum and Extension of Deadlines for Scope Case Briefs and Scope Rebuttal Briefs,'' dated October 13, 2016 (Additional Preliminary Scope Decision Memorandum), respectively.

[6] *See* Preliminary Scope Decision Memorandum at 2 and 56, and Additional Preliminary Scope Decision Memorandum at 10–11 and 20.

[7] *See* Memorandum to Melissa G. Skinner, Director, AD/CVD Operations Office II, entitled, ''Whether to Collapse Salzgitter Mannesmann International GmbH and its Affiliated Producers in the Antidumping Duty Investigation of Certain Carbon and Alloy Steel Cut-to-Length Plate (CTL Plate) from the Federal Republic of Germany (Germany),'' dated October 27, 2016.

Register. Because the estimated preliminary weighted-average dumping margin for Salzgitter is zero, we are not directing CBP to suspend liquidation of entries of the merchandise it produced and/or exported.

Pursuant to section 733(d) of the Act and 19 CFR 351.205(d), we will instruct CBP to require cash deposits [8] equal to the weighted-average amount by which the NV exceeds U.S. price, as indicated in the chart above, as follows: (1) The rate for the mandatory respondents listed above will be the respondent-specific rates we determined in this preliminary determination; (2) if the exporter is not a mandatory respondent identified above, but the producer is, the rate will be the specific rate established for the producer of the subject merchandise; and (3) the rate for all other producers or exporters will be the all-others rate. These suspension of liquidation instructions will remain in effect until further notice.

Disclosure

We intend to disclose the calculations performed to interested parties in this proceeding within five days of the date of the public announcement of this notice in accordance with 19 CFR 351.224(b).

Verification

As provided in section 782(i) of the Act, we intend to verify information relied upon in making our final determination.

Public Comment

Interested parties are invited to comment on this preliminary determination. Case briefs or other written comments may be submitted to the Assistant Secretary for Enforcement and Compliance no later than seven days after the date on which the final verification report is issued in this proceeding, and rebuttal briefs, limited to issues raised in case briefs, may be submitted no later than five days after the deadline date for case briefs.[9] Pursuant to 19 CFR 351.309(c)(2) and (d)(2), parties who submit case briefs or rebuttal briefs in this proceeding are encouraged to submit with each argument: (1) A statement of the issue; (2) a brief summary of the argument; and (3) a table of authorities.

The Department established separate deadlines for interested parties to provide comments on scope issues.[10] Specifically, case briefs on scope issues were to be submitted no later than October 21, 2016. Scope rebuttal briefs, limited to issues raised in the scope case briefs, were to be submitted no later than November 1, 2016.[11] The Department explained that parties should limit comments on scope issues to their scope case brief and their scope rebuttal brief.[12] Thus, comments on scope issues belong in parties' scope case briefs and scope rebuttal briefs only and not in other case briefs and rebuttal briefs submitted in this investigation. The Department intends to address parties' scope comments in a final scope memorandum.

Pursuant to 19 CFR 351.310(c), interested parties who wish to request a hearing must submit a written request to the Assistant Secretary for Enforcement and Compliance, U.S. Department of Commerce within 30 days after the date of publication of this notice. Requests should contain the party's name, address, and telephone number, the number of participants, and a list of the issues to be discussed. If a request for a hearing is made, the Department intends to hold the hearing at the U.S. Department of Commerce, 1401 Constitution Avenue NW., Washington, DC 20230, at a time and date to be determined. Parties should confirm by telephone the date, time, and location of the hearing two days before the scheduled date.

All documents must be filed electronically using ACCESS. An electronically-filed request must be received successfully in its entirety by ACCESS by 5:00 p.m. Eastern Standard Time.

Postponement of Final Determination and Extension of Provisional Measures

Section 735(a)(2) of the Act provides that a final determination may be postponed until not later than 135 days after the date of the publication of the preliminary determination if, in the event of an affirmative preliminary determination, a request for such postponement is made by exporters who account for a significant proportion of exports of the subject merchandise, or in the event of a negative preliminary determination, a request for such postponement is made by the petitioner. 19 CFR 351.210(e)(2) requires that requests by respondents for postponement of a final determination be accompanied by a request for extension of provisional measures from a four-month period to a period not more than six months in duration.

Respondents Dillinger and Salzgitter have requested that, in the event of an affirmative preliminary determination in this investigation, the Department postpone its final determination by 60 days (*i.e.,* to 135 days after publication of the preliminary determination).[13] Further, Salzgitter agreed to extend the application of the provisional measures prescribed under section 733(d) of the Act and 19 CFR 351.210(e)(2), from a four-month period to a period not to exceed six months.

In accordance with section 735(a)(2)(A) of the Act and 19 CFR 351.210(b)(2)(ii), because (1) our preliminary determination is affirmative; (2) Salzgitter accounts for a significant proportion of exports of the subject merchandise; and (3) no compelling reasons for denial exist, we are postponing the final determination until no later than 135 days after the publication of this notice in the **Federal Register** and extending the provisional measures from a four-month period to a period not greater than six months. Accordingly, we will issue our final determination no later than 135 days after the date of publication of this preliminary determination, pursuant to section 735(a)(2) of the Act.[14]

International Trade Commission (ITC) Notification

In accordance with section 733(f) of the Act, we are notifying the ITC of our affirmative preliminary determination of sales at LTFV. If our final determination is affirmative, the ITC will determine before the later of 120 days after the date of this preliminary determination or 45 days after our final determination whether these imports are materially injuring, or threaten material injury to, the U.S. industry.

This determination is issued and published in accordance with sections 733(f) and 777(i)(1) of the Act and 19 CFR 351.205(c).

[8] *See Modification of Regulations Regarding the Practice of Accepting Bonds During the Provisional Measures Period in Antidumping and Countervailing Duty Investigations,* 76 FR 61042 (October 3, 2011).

[9] *See* 19 CFR 351.309; *see also* 19 CFR 351.303 (for general filing requirements).

[10] *See* Preliminary Scope Decision Memorandum; Additional Preliminary Scope Decision Memorandum; Memorandum to the File ''Deadlines for Submitting Scope Case Briefs and Scope Rebuttal Briefs,'' dated October 18, 2016 (Deadline Memo for Scope Briefs); and Memorandum to the File ''Extension of Deadline for Submitting Scope Rebuttal Briefs,'' dated October 28, 2016 (Extension Memo for Scope Rebuttal Briefs).

[11] *See* Deadline Memo for Scope Briefs and Extension Memo for Scope Rebuttal Briefs.

[12] *See e.g.,* Deadline Memo for Scope Briefs.

[13] *See* letter from Dillinger entitled, ''Certain Carbon and Alloy Steel Cut-To-Length Plate from the Federal Republic of Germany: Request for Extension of Final Determination,'' dated October 17, 2016; and letter from Salzgitter entitled, ''Antidumping Duty Investigation of Certain Carbon and Alloy Steel Cut-to-Length Plate from the Federal Republic of Germany (''Germany''): Request to Postpone Final Determination,'' dated October 20, 2016.

[14] *See* 19 CFR 351.210(b)(2) and (e).

Dated: November 4, 2016.

Paul Piquado,

Assistant Secretary for Enforcement and Compliance.

Appendix I—Scope of the Investigation

The products covered by this investigation are certain carbon and alloy steel hot-rolled or forged flat plate products not in coils, whether or not painted, varnished, or coated with plastics or other non-metallic substances (cut-to-length plate). Subject merchandise includes plate that is produced by being cut-to-length from coils or from other discrete length plate and plate that is rolled or forged into a discrete length. The products covered include (1) Universal mill plates (*i.e.,* flat-rolled products rolled on four faces or in a closed box pass, of a width exceeding 150 mm but not exceeding 1250 mm, and of a thickness of not less than 4 mm, which are not in coils and without patterns in relief), and (2) hot-rolled or forged flat steel products of a thickness of 4.75 mm or more and of a width which exceeds 150 mm and measures at least twice the thickness, and which are not in coils, whether or not with patterns in relief. The covered products described above may be rectangular, square, circular or other shapes and include products of either rectangular or non-rectangular cross-section where such non-rectangular cross-section is achieved subsequent to the rolling process, *i.e.,* products which have been ''worked after rolling'' (*e.g.,* products which have been beveled or rounded at the edges).

For purposes of the width and thickness requirements referenced above, the following rules apply:

(1) Except where otherwise stated where the nominal and actual thickness or width measurements vary, a product from a given subject country is within the scope if application of either the nominal or actual measurement would place it within the scope based on the definitions set forth above; and

(2) where the width and thickness vary for a specific product (*e.g.,* the thickness of certain products with non-rectangular cross-section, the width of certain products with non-rectangular shape, *etc.*), the measurement at its greatest width or thickness applies.

Steel products included in the scope of this investigation are products in which: (1) Iron predominates, by weight, over each of the other contained elements; and (2) the carbon content is 2 percent or less by weight.

Subject merchandise includes cut-to-length plate that has been further processed in the subject country or a third country, including but not limited to pickling, oiling, levelling, annealing, tempering, temper rolling, skin passing, painting, varnishing, trimming, cutting, punching, beveling, and/or slitting, or any other processing that would not otherwise remove the merchandise from the scope of the investigation if performed in the country of manufacture of the cut-to-length plate.

All products that meet the written physical description, are within the scope of this investigation unless specifically excluded or covered by the scope of an existing order. The following products are outside of, and/or specifically excluded from, the scope of this investigation:

(1) Products clad, plated, or coated with metal, whether or not painted, varnished or coated with plastic or other non-metallic substances;

(2) military grade armor plate certified to one of the following specifications or to a specification that references and incorporates one of the following specifications:

- MIL–A–12560,
- MIL–DTL–12560H,
- MIL–DTL–12560J,
- MIL–DTL–12560K,
- MIL–DTL–32332,
- MIL–A–46100D,
- MIL–DTL–46100–E,
- MIL–46177C,
- MIL–S–16216K Grade HY80,
- MIL–S–16216K Grade HY100,
- MIL–S–24645A HSLA–80;
- MIL–S–24645A HSLA–100,
- T9074–BD–GIB–010/0300 Grade HY80,
- T9074–BD–GIB–010/0300 Grade HY100,
- T9074–BD–GIB–010/0300 Grade HSLA80,
- T9074–BD–GIB–010/0300 Grade HSLA100, and
- T9074–BD–GIB–010/0300 Mod. Grade HSLA115,

except that any cut-to-length plate certified to one of the above specifications, or to a military grade armor specification that references and incorporates one of the above specifications, will not be excluded from the scope if it is also dual- or multiple-certified to any other non-armor specification that otherwise would fall within the scope of this order;

(3) stainless steel plate, containing 10.5 percent or more of chromium by weight and not more than 1.2 percent of carbon by weight;

(4) CTL plate meeting the requirements of ASTM A–829, Grade E 4340 that are over 305 mm in actual thickness;

(5) Alloy forged and rolled CTL plate greater than or equal to 152.4 mm in actual thickness meeting each of the following requirements:

(a) Electric furnace melted, ladle refined & vacuum degassed and having a chemical composition (expressed in weight percentages):

- Carbon 0.23–0.28,
- Silicon 0.05–0.20,
- Manganese 1.20–1.60,
- Nickel not greater than 1.0,
- Sulfur not greater than 0.007,
- Phosphorus not greater than 0.020,
- Chromium 1.0–2.5,
- Molybdenum 0.35–0.80,
- Boron 0.002–0.004,
- Oxygen not greater than 20 ppm,
- Hydrogen not greater than 2 ppm, and
- Nitrogen not greater than 60 ppm;

(b) With a Brinell hardness measured in all parts of the product including mid thickness falling within one of the following ranges:

(i) 270–300 HBW,

(ii) 290–320 HBW, or

(iii) 320–350HBW;

(c) Having cleanliness in accordance with ASTM E45 method A (Thin and Heavy): A not exceeding 1.5, B not exceeding 1.0, C not exceeding 0.5, D not exceeding 1.5; and

(d) Conforming to ASTM A578–S9 ultrasonic testing requirements with acceptance criteria 2 mm flat bottom hole;

(6) Alloy forged and rolled steel CTL plate over 407 mm in actual thickness and meeting the following requirements:

(a) Made from Electric Arc Furnace melted, Ladle refined & vacuum degassed, alloy steel with the following chemical composition (expressed in weight percentages):

- Carbon 0.23–0.28,
- Silicon 0.05–0.15,
- Manganese 1.20–1.50,
- Nickel not greater than 0.4,
- Sulfur not greater than 0.010,
- Phosphorus not greater than 0.020,
- Chromium 1.20–1.50,
- Molybdenum 0.35–0.55,
- Boron 0.002–0.004,
- Oxygen not greater than 20 ppm,
- Hydrogen not greater than 2 ppm, and
- Nitrogen not greater than 60 ppm;

(b) Having cleanliness in accordance with ASTM E45 method A (Thin and Heavy): A not exceeding 1.5, B not exceeding 1.5, C not exceeding 1.0, D not exceeding 1.5;

(c) Having the following mechanical properties:

(i) With a Brinell hardness not more than 237 HBW measured in all parts of the product including mid thickness; and having a Yield Strength of 75ksi min and UTS 95ksi or more, Elongation of 18% or more and Reduction of area 35% or more; having charpy V at −75 degrees F in the longitudinal direction equal or greater than 15 ft. lbs (single value) and equal or greater than 20 ft. lbs (average of 3 specimens) and conforming to the requirements of NACE MR01–75; or

(ii) With a Brinell hardness not less than 240 HBW measured in all parts of the product including mid thickness; and having a Yield Strength of 90 ksi min and UTS 110 ksi or more, Elongation of 15% or more and Reduction of area 30% or more; having charpy V at −40 degrees F in the longitudinal direction equal or greater than 21 ft. lbs (single value) and equal or greater than 31 ft. lbs (average of 3 specimens);

(d) Conforming to ASTM A578–S9 ultrasonic testing requirements with acceptance criteria 3.2 mm flat bottom hole; and

(e) Conforming to magnetic particle inspection in accordance with AMS 2301;

(7) Alloy forged and rolled steel CTL plate over 407 mm in actual thickness and meeting the following requirements:

(a) Made from Electric Arc Furnace melted, Ladle refined & vacuum degassed, alloy steel with the following chemical composition (expressed in weight percentages):

- Carbon 0.23–0.28,
- Silicon 0.05–0.15,
- Manganese 1.20–1.50,
- Nickel not greater than 0.4,
- Sulfur not greater than 0.010,
- Phosphorus not greater than 0.020,
- Chromium 1.20–1.50,
- Molybdenum 0.35–0.55,
- Boron 0.002–0.004,
- Oxygen not greater than 20 ppm,
- Hydrogen not greater than 2 ppm, and
- Nitrogen not greater than 60 ppm;

(b) Having cleanliness in accordance with ASTM E45 method A (Thin and Heavy): A

not exceeding 1.5, B not exceeding 1.5, C not exceeding 1.0, D not exceeding 1.5;

(c) Having the following mechanical properties:

(i) With a Brinell hardness not more than 237 HBW measured in all parts of the product including mid thickness; and having a Yield Strength of 75ksi min and UTS 95ksi or more, Elongation of 18% or more and Reduction of area 35% or more; having charpy V at −75 degrees F in the longitudinal direction equal or greater than 15 ft. lbs (single value) and equal or greater than 20 ft. lbs (average of 3 specimens) and conforming to the requirements of NACE MR01–75; or

(ii) With a Brinell hardness not less than 240 HBW measured in all parts of the product including mid thickness; and having a Yield Strength of 90 ksi min and UTS 110 ksi or more, Elongation of 15% or more and Reduction of area 30% or more; having charpy V at −40 degrees F in the longitudinal direction equal or greater than 21 ft. lbs (single value) and equal or greater than 31 ft. lbs (average of 3 specimens);

(d) Conforming to ASTM A578–S9 ultrasonic testing requirements with acceptance criteria 3.2 mm flat bottom hole; and

(e) Conforming to magnetic particle inspection in accordance with AMS 2301;

(7) Alloy forged and rolled steel CTL plate over 407 mm in actual thickness and meeting the following requirements:

(a) Made from Electric Arc Furnace melted, ladle refined & vacuum degassed, alloy steel with the following chemical composition (expressed in weight percentages):

- Carbon 0.25–0.30,
- Silicon not greater than 0.25,
- Manganese not greater than 0.50,
- Nickel 3.0–3.5,
- Sulfur not greater than 0.010,
- Phosphorus not greater than 0.020,
- Chromium 1.0–1.5,
- Molybdenum 0.6–0.9,
- Vanadium 0.08 to 0.12
- Boron 0.002–0.004,
- Oxygen not greater than 20 ppm,
- Hydrogen not greater than 2 ppm, and
- Nitrogen not greater than 60 ppm.

(b) Having cleanliness in accordance with ASTM E45 method A (Thin and Heavy): A not exceeding 1.0(t) and 0.5(h), B not exceeding 1.5(t) and 1.0(h), C not exceeding 1.0(t) and 0.5(h), and D not exceeding 1.5(t) and 1.0(h);

(c) Having the following mechanical properties: A Brinell hardness not less than 350 HBW measured in all parts of the product including mid thickness; and having a Yield Strength of 145ksi or more and UTS 160ksi or more, Elongation of 15% or more and Reduction of area 35% or more; having charpy V at −40 degrees F in the transverse direction equal or greater than 20 ft. lbs (single value) and equal or greater than 25 ft. lbs (average of 3 specimens);

(d) Conforming to ASTM A578–S9 ultrasonic testing requirements with acceptance criteria 3.2 mm flat bottom hole; and

(e) Conforming to magnetic particle inspection in accordance with AMS 2301.

The products subject to the investigation are currently classified in the Harmonized Tariff Schedule of the United States (HTSUS) under item numbers: 7208.40.3030, 7208.40.3060, 7208.51.0030, 7208.51.0045, 7208.51.0060, 7208.52.0000, 7211.13.0000, 7211.14.0030, 7211.14.0045, 7225.40.1110, 7225.40.1180, 7225.40.3005, 7225.40.3050, 7226.20.0000, and 7226.91.5000.

The products subject to the investigation may also enter under the following HTSUS item numbers: 7208.40.6060, 7208.53.0000, 7208.90.0000, 7210.70.3000, 7210.90.9000, 7211.19.1500, 7211.19.2000, 7211.19.4500, 7211.19.6000, 7211.19.7590, 7211.90.0000, 7212.40.1000, 7212.40.5000, 7212.50.0000, 7214.10.0000, 7214.30.0010, 7214.30.0080, 7214.91.0015, 7214.91.0060, 7214.91.0090, 7225.11.0000, 7225.19.0000, 7225.40.5110, 7225.40.5130, 7225.40.5160, 7225.40.7000, 7225.99.0010, 7225.99.0090, 7226.11.1000, 7226.11.9060, 7226.19.1000, 7226.19.9000, 7226.91.0500, 7226.91.1530, 7226.91.1560, 7226.91.2530, 7226.91.2560, 7226.91.7000, 7226.91.8000, and 7226.99.0180.

The HTSUS subheadings above are provided for convenience and customs purposes only. The written description of the scope of the investigation is dispositive.

Appendix II—List of Topics Discussed in the Preliminary Decision Memorandum

I. Summary
II. Background
III. Period of Investigation
IV. Scope Comments
V. Discussion of the Methodology
  a. Determination of Comparison Method
  b. Results of the Differential Pricing Analysis
VI. Date of Sale
VII. Product Comparisons
VIII. Export Price/Constructed Export Price
IX. Normal Value
  a. Home Market Viability
  b. Affiliated-Party Transactions and Arm's-Length Test
  c. Level of Trade
  d. Cost of Production Analysis
  1. Calculation of COP
  2. Test of Comparison Market Sales Prices
  3. Results of the COP Test
  e. Calculation of NV Based on Comparison-Market Prices
  f. Price-to-Constructed Value Comparison
X. Currency Conversion
XI. Conclusion

[FR Doc. 2016–27313 Filed 11–10–16; 8:45 am]

BILLING CODE 3510–DS–P

DEPARTMENT OF COMMERCE

International Trade Administration

[A–570–047]

Certain Carbon and Alloy Steel Cut-To-Length Plate From the People's Republic of China: Preliminary Affirmative Determination of Sales at Less Than Fair Value

AGENCY: Enforcement and Compliance, International Trade Administration, Department of Commerce.

SUMMARY: The Department of Commerce (''Department'') preliminarily determines that certain carbon and alloy steel cut-to-length plate (''CTL plate'') from the People's Republic of China (''PRC'') is being, or is likely to be, sold in the United States at less than fair value (''LTFV''). The period of investigation (''POI'') is October 1, 2015, through March 31, 2016. The estimated dumping margin of sales at LTFV is shown in the ''Preliminary Determination'' section of this notice. Interested parties are invited to comment on this preliminary determination.

DATES: Effective November 14, 2016.

FOR FURTHER INFORMATION CONTACT: Irene Gorelik, AD/CVD Operations, Office VIII, Enforcement and Compliance, International Trade Administration, U.S. Department of Commerce, 14th Street and Constitution Avenue NW., Washington, DC 20230; telephone: (202) 482–6905.

SUPPLEMENTARY INFORMATION:

Background

The Department initiated this investigation on April 28, 2016.[1] For a complete description of the events that followed the initiation of this investigation, *see* the memorandum that is dated concurrently with this determination and hereby adopted by this notice.[2] A list of topics in the Preliminary Decision Memorandum is included as Appendix II to this notice.

The Preliminary Decision Memorandum is a public document and is made available to the public via Enforcement and Compliance's Antidumping and Countervailing Duty Centralized Electronic Service System (''ACCESS''). ACCESS is available to registered users at *https://access.trade.gov,* and is available to all parties in the Department's Central Records Unit, room B8024 of the main Department of Commerce building. In addition, a complete version of the Preliminary Decision Memorandum can be accessed directly on the internet at

[1] *See Certain Carbon and Alloy Steel Cut-To-Length Plate From Austria, Belgium, Brazil, France, the Federal Republic of Germany, Italy, Japan, the Republic of Korea, the People's Republic of China, South Africa, Taiwan, and the Republic of Turkey: Initiation of Less-Than-Fair-Value Investigations,* 81 FR 27089 (May 5, 2016) (''*Initiation Notice*'').

[2] *See* Memorandum from Christian Marsh, Deputy Assistant Secretary for Antidumping and Countervailing Duty Operations, to Paul Piquado, Assistant Secretary for Enforcement and Compliance, re: ''Decision Memorandum for the Preliminary Determination in the Antidumping Duty Investigation of Certain Carbon and Alloy Steel Cut-To-Length Plate from the People's Republic of China'' (''Preliminary Decision Memorandum'').

http://enforcement.trade.gov/frn/. The signed Preliminary Decision Memorandum and the electronic version of the Preliminary Decision Memorandum are identical in content.

Scope of the Investigation

The product covered by this investigation is CTL plate from the PRC. For a full description of the scope of this investigation, *see* the ''Scope of the Investigation'' in Appendix I of this notice.

Scope Comments

In accordance with the *Preamble* to the Department's regulations,[3] the *Initiation Notice* set aside a period of time for parties to raise issues regarding product coverage, *i.e.,* scope.[4] Certain interested parties commented on the scope of the concurrent CTL plate investigations as it appeared in the *Initiation Notice.* For a summary of the product coverage comments and rebuttal responses submitted to the records of this and the concurrent CTL plate investigations, and a discussion and analysis of all comments timely received, *see* the Department's Preliminary Scope Decision Memorandum and the Department's Additional Preliminary Scope Decision Memorandum.[5] The Department has preliminarily modified the scope language as it appeared in the *Initiation Notice* to clarify the exclusion for stainless steel plate, corrected two tariff numbers that were misidentified in the Petitions and in the *Initiation Notice,* and modified language pertaining to existing steel plate and hot-rolled flat-rolled steel orders.[6]

Methodology

The Department is conducting this investigation in accordance with section 731 of the Tariff Act of 1930, as amended (''the Act''). For purposes of this preliminary LTFV determination, the Department continues to treat the PRC as a non-market economy country within the meaning of section 771(18) of the Act. Jiangyin Xingcheng Special Steel Works Co., Ltd., the sole mandatory respondent in this investigation, is not entitled to a separate rate, and is included within the PRC-wide entity. Furthermore, because the PRC-wide entity did not cooperate to the best of its ability with the Department's requests for information, the Department preliminarily determines that the application of adverse facts available (''AFA'') is warranted for this preliminary determination, in accordance with sections 776(a) and (b) of the Act and 19 CFR 351.308. For a full discussion of the Department's methodology, *see* Preliminary Decision Memorandum.

Combination Rates

In the *Initiation Notice,* the Department stated that it would calculate combination rates for the respondents that are eligible for a separate rate in this investigation. *Policy Bulletin 05.1* describes this practice.[7] However, as described in the Preliminary Decision Memorandum, all parties subject to this investigation are preliminarily found to be part of the PRC-wide entity, to which we do not assign a separate combination rate.[8]

Preliminary Determination

The Department preliminarily determines that CTL plate from the PRC is being, or is likely to be, sold in the United States at LTFV, pursuant to section 733 of the Act, and that the following estimated dumping margin exists:

Exporter	Dumping margin (percent)
PRC-Wide Entity [9]	68.27

Suspension of Liquidation

In accordance with section 733(d)(2) of the Act, we will direct U.S. Customs and Border Protection (''CBP'') to suspend liquidation of all entries of subject merchandise from the PRC, as described in Appendix I of this notice, which are entered, or withdrawn from warehouse, for consumption on or after the date of publication of this notice in the **Federal Register**. Pursuant to section 733(d) of the Act and 19 CFR 351.205(d), we will instruct CBP to require a cash deposit equal to the margin indicated in the chart above.[10] These suspension of liquidation instructions will remain in effect until further notice.

We normally adjust antidumping duty cash deposit rates by the amount of export subsidies, where appropriate. However, the Department is making no adjustments to the PRC-wide entity's antidumping cash deposit rate of 68.27 percent because the Department made no findings in the companion CVD investigation that any of the programs are export subsidies.[11]

Further, pursuant to section 777A(f) of the Act, we normally adjust cash deposit rates for estimated domestic subsidy pass-through, where appropriate. However, in this case there is no basis to grant a domestic subsidy pass-through adjustment.[12]

Disclosure

Normally, the Department discloses to interested parties the calculations performed in connection with a preliminary determination within five days of the date of public announcement of a preliminary determination, in accordance with 19 CFR 351.224(b). However, because the Department established only one rate in this investigation based entirely on AFA

[3] *See Antidumping Duties; Countervailing Duties; Final rule,* 62 FR 27296, 27323 (May 19, 1997) (''*Preamble*'').

[4] *See Initiation Notice,* 81 FR at 27089.

[5] *See* Memorandum to Christian Marsh, Deputy Assistant Secretary for Antidumping and Countervailing Duty Operations, ''Certain Carbon and Alloy Steel Cut-to-Length Plate From Austria, Belgium, Brazil, the People's Republic of China, France, the Federal Republic of Germany, Italy, Japan, the Republic of Korea, the Republic of South Africa, Taiwan, and Turkey: Scope Comments Decision Memorandum for the Preliminary Determinations,'' dated September 6, 2016 (''Preliminary Scope Decision Memorandum''), and Memorandum to Christian Marsh, Deputy Assistant Secretary for Antidumping and Countervailing Duty Operations, Certain Carbon and Alloy Steel Cut-to-Length Plate From Austria, Belgium, Brazil, the People's Republic of China, France, the Federal Republic of Germany, Italy, Japan, the Republic of Korea, the Republic of South Africa, Taiwan, and Turkey: Additional Scope Comments Preliminary Decision Memorandum and Extension of Deadlines for Scope Case Briefs and Scope Rebuttal Briefs,'' dated October 13, 2016 (''Additional Preliminary Scope Decision Memorandum''), respectively.

[6] *See* Preliminary Scope Decision Memorandum at 2 and 56, and Additional Preliminary Scope Decision Memorandum at 10–11 and 20.

[7] *See Enforcement and Compliance's Policy Bulletin No. 05.1, regarding, ''Separate-Rates Practice and Application of Combination Rates in Antidumping Investigations involving Non-Market Economy Countries''* (April 5, 2005) (''*Policy Bulletin 05.1*''), available on the Department's Web site at *http://enforcement.trade.gov/policy/bull05–1.pdf.*

[8] *Id. See also Calcium Hypochlorite from the People's Republic of China: Preliminary Determination of Sales at Less Than Fair Value and Postponement of Final Determination,* 79 FR 43393, 43394 (July 25, 2014), unchanged in *Calcium Hypochlorite from the People's Republic of China: Final Determination of Sales at Less Than Fair Value,* 79 FR 74065 (December 15, 2014).

[9] As detailed in the Preliminary Decision Memorandum, Jiangyin Xingcheng Special Steel Works Co., Ltd. the sole mandatory respondent in this investigation, did not demonstrate that it was entitled to a separate rate. Accordingly, we consider this company to be part of the PRC-wide entity.

[10] *See Modification of Regulations Regarding the Practice of Accepting Bonds During the Provisional Measures Period in Antidumping and Countervailing Duty Investigations,* 76 FR 61042, (October 3, 2011).

[11] *See* Preliminary Decision Memorandum. *See also Circular Welded Carbon-Quality Steel Pipe from Pakistan: Affirmative Preliminary Determination of Sales at Less Than Fair Value and Postponement of Final Determination and Extension of Provisional Measures,* 81 FR 36867 (June 8, 2016) and accompanying Preliminary Decision Memorandum at page 13, unchanged in *Circular Welded Carbon-Quality Steel Pipe from Pakistan: Final Affirmative Determination of Sales at Less Than Fair Value,* 81 FR 75028 (October 28, 2016).

[12] *See* Preliminary Decision Memorandum.

in accordance with section 776 of the Act, there are no calculations to disclose. Accordingly, the calculations performed in connection with this preliminary determination are not proprietary in nature, and are described in the Petition and in the PRC AD Initiation Checklist.[13]

Verification

Because the only rate established in this investigation is based entirely on AFA, we do not intend to conduct verification.

Public Comment

Interested parties are invited to comment on this preliminary determination. Case briefs or other written comments may be submitted to the Assistant Secretary for Enforcement and Compliance no later than 30 days after the date of publication of this preliminary determination and rebuttal briefs, limited to issues raised in case briefs, may be submitted no later than five days after the deadline date for case briefs.[14] Pursuant to 19 CFR 351.309(c)(2) and (d)(2), parties who submit case briefs or rebuttal briefs in this proceeding are encouraged to submit with each argument: (1) A statement of the issue; (2) a brief summary of the argument; and (3) a table of authorities.

The Department established separate deadlines for interested parties to provide comments on scope issues.[15] Specifically, case briefs on scope issues were to be submitted no later than October 21, 2016. Scope rebuttal briefs, limited to issues raised in the scope case briefs, were to be submitted no later than November 1, 2016.[16] The Department explained that parties should limit comments on scope issues to their scope case brief and their scope rebuttal brief.[17] Thus, comments on scope issues belong in parties' scope case briefs and scope rebuttal briefs only and not in other case briefs and rebuttal briefs submitted in this investigation. The Department intends to address parties' scope comments in a final scope memorandum.

Pursuant to 19 CFR 351.310(c), interested parties who wish to request a hearing must submit a written request to the Assistant Secretary for Enforcement and Compliance, U.S. Department of Commerce, within 30 days after the date of publication of this notice. Requests should contain the party's name, address, and telephone number, the number of participants, and a list of the issues to be discussed. If a request for a hearing is made, the Department intends to hold the hearing at the U.S. Department of Commerce, 1401 Constitution Avenue NW., Washington, DC 20230, at a time and date to be determined. Parties should confirm by telephone the date, time, and location of the hearing two days before the scheduled date.

All documents must be filed electronically using ACCESS. An electronically-filed request must be received successfully in its entirety by ACCESS by 5:00 p.m. Eastern Standard Time.

Pursuant to section 735(a)(1) of the Act, we intend to make our final determination no later than 75 days after the date of publication of this preliminary determination.

International Trade Commission (''ITC'') Notification

In accordance with section 733(f) of the Act, we are notifying the ITC of our affirmative preliminary determination of sales at LTFV. If our final determination is affirmative, the ITC will determine before the later of 120 days after the date of this preliminary determination or 45 days after our final determination whether these imports are materially injuring, or threaten material injury to, the U.S. industry.

This determination is issued and published in accordance with sections 733(f) and 777(i)(1) of the Act and 19 CFR 351.205(c).

Dated: November 4, 2016.

Paul Piquado,

Assistant Secretary for Enforcement and Compliance.

Appendix I

Scope of the Investigation

The products covered by this investigation are certain carbon and alloy steel hot-rolled or forged flat plate products not in coils, whether or not painted, varnished, or coated with plastics or other non-metallic substances (cut-to-length plate). Subject merchandise includes plate that is produced by being cut-to-length from coils or from other discrete length plate and plate that is rolled or forged into a discrete length. The products covered include (1) Universal mill plates (*i.e.,* flat-rolled products rolled on four faces or in a closed box pass, of a width exceeding 150 mm but not exceeding 1250 mm, and of a thickness of not less than 4 mm, which are not in coils and without patterns in relief), and (2) hot-rolled or forged flat steel products of a thickness of 4.75 mm or more and of a width which exceeds 150 mm and measures at least twice the thickness, and which are not in coils, whether or not with patterns in relief. The covered products described above may be rectangular, square, circular or other shapes and include products of either rectangular or non-rectangular cross-section where such non-rectangular cross-section is achieved subsequent to the rolling process, *i.e.,* products which have been ''worked after rolling'' (*e.g.,* products which have been beveled or rounded at the edges).

For purposes of the width and thickness requirements referenced above, the following rules apply:

(1) Except where otherwise stated where the nominal and actual thickness or width measurements vary, a product from a given subject country is within the scope if application of either the nominal or actual measurement would place it within the scope based on the definitions set forth above unless the product is already covered by an order existing on that specific country (*e.g., Notice of the Antidumping Duty Order: Certain Hot-Rolled Carbon Steel Flat Products From the People's Republic of China,* 66 FR 59561 (November 29, 2001)); and

(2) where the width and thickness vary for a specific product (*e.g.,* the thickness of certain products with non-rectangular cross-section, the width of certain products with non-rectangular shape, *etc.*), the measurement at its greatest width or thickness applies.

Steel products included in the scope of this investigation are products in which: (1) Iron predominates, by weight, over each of the other contained elements; and (2) the carbon content is 2 percent or less by weight.

Subject merchandise includes cut-to-length plate that has been further processed in the subject country or a third country, including but not limited to pickling, oiling, levelling, annealing, tempering, temper rolling, skin passing, painting, varnishing, trimming, cutting, punching, beveling, and/or slitting, or any other processing that would not

[13] *See* Petitions for the Imposition of Antidumping and Countervailing Duties: Certain Carbon and Alloy Steel Cut-To-Length Plate from Austria, Belgium, Brazil, France, the Federal Republic of Germany, Italy, Japan, the Republic of Korea, the People's Republic of China, South Africa, Taiwan, and the Republic of Turkey, dated April 8, 2016 (''Petition''), Volume IV at 24; Supplement to the Petition, dated April 18, 2016; *see also Initiation Notice* and accompanying Antidumping Duty Investigation Initiation Checklist: Certain Carbon and Alloy Steel Cut-to-Length Plate from the People's Republic of China (''PRC AD Initiation Checklist''), at pages 7–11; and Preliminary Decision Memorandum at 11–12.

[14] *See* 19 CFR 351.309; *see also* 19 CFR 351.303 (for general filing requirements).

[15] *See* Preliminary Scope Decision Memorandum; Additional Preliminary Scope Decision Memorandum; Memorandum to the File ''Deadlines for Submitting Scope Case Briefs and Scope Rebuttal Briefs,'' dated October 18, 2016 (''Deadline Memo for Scope Briefs''); and Memorandum to the File ''Extension of Deadline for Submitting Scope Rebuttal Briefs,'' dated October 28, 2016 (''Extension Memo for Scope Rebuttal Briefs'').

[16] *See* Deadline Memo for Scope Briefs and Extension Memo for Scope Rebuttal Briefs.

[17] *See, e.g.,* Deadline Memo for Scope Briefs.

otherwise remove the merchandise from the scope of the investigation if performed in the country of manufacture of the cut-to-length plate.

All products that meet the written physical description, are within the scope of this investigation unless specifically excluded or covered by the scope of an existing order. The following products are outside of, and/or specifically excluded from, the scope of this investigation:

(1) Products clad, plated, or coated with metal, whether or not painted, varnished or coated with plastic or other non-metallic substances;

(2) military grade armor plate certified to one of the following specifications or to a specification that references and incorporates one of the following specifications:

- MIL–A–12560,
- MIL–DTL–12560H,
- MIL–DTL–12560J,
- MIL–DTL–12560K,
- MIL–DTL–32332,
- MIL–A–46100D,
- MIL–DTL–46100–E,
- MIL–46177C,
- MIL–S–16216K Grade HY80,
- MIL–S–16216K Grade HY100,
- MIL–S–24645A HSLA–80;
- MIL–S–24645A HSLA–100,
- T9074–BD–GIB–010/0300 Grade HY80,
- T9074–BD–GIB–010/0300 Grade HY100,
- T9074–BD–GIB–010/0300 Grade HSLA80,
- T9074–BD–GIB–010/0300 Grade HSLA100, and
- T9074–BD–GIB–010/0300 Mod. Grade HSLA115,

except that any cut-to-length plate certified to one of the above specifications, or to a military grade armor specification that references and incorporates one of the above specifications, will not be excluded from the scope if it is also dual- or multiple-certified to any other non-armor specification that otherwise would fall within the scope of this order;

(3) stainless steel plate, containing 10.5 percent or more of chromium by weight and not more than 1.2 percent of carbon by weight;

(4) CTL plate meeting the requirements of ASTM A–829, Grade E 4340 that are over 305 mm in actual thickness;

(5) Alloy forged and rolled CTL plate greater than or equal to 152.4 mm in actual thickness meeting each of the following requirements:

(a) Electric furnace melted, ladle refined & vacuum degassed and having a chemical composition (expressed in weight percentages):

- Carbon 0.23–0.28,
- Silicon 0.05–0.20,
- Manganese 1.20–1.60,
- Nickel not greater than 1.0,
- Sulfur not greater than 0.007,
- Phosphorus not greater than 0.020,
- Chromium 1.0–2.5,
- Molybdenum 0.35–0.80,
- Boron 0.002–0.004,
- Oxygen not greater than 20 ppm,
- Hydrogen not greater than 2 ppm, and
- Nitrogen not greater than 60 ppm;

(b) With a Brinell hardness measured in all parts of the product including mid thickness falling within one of the following ranges:

(i) 270–300 HBW,

(ii) 290–320 HBW, or

(iii) 320–350HBW;

(c) Having cleanliness in accordance with ASTM E45 method A (Thin and Heavy): A not exceeding 1.5, B not exceeding 1.0, C not exceeding 0.5, D not exceeding 1.5; and

(d) Conforming to ASTM A578–S9 ultrasonic testing requirements with acceptance criteria 2 mm flat bottom hole;

(6) Alloy forged and rolled steel CTL plate over 407 mm in actual thickness and meeting the following requirements:

(a) Made from Electric Arc Furnace melted, Ladle refined & vacuum degassed, alloy steel with the following chemical composition (expressed in weight percentages):

- Carbon 0.23–0.28,
- Silicon 0.05–0.15,
- Manganese 1.20–1.50,
- Nickel not greater than 0.4,
- Sulfur not greater than 0.010,
- Phosphorus not greater than 0.020,
- Chromium 1.20–1.50,
- Molybdenum 0.35–0.55,
- Boron 0.002–0.004,
- Oxygen not greater than 20 ppm,
- Hydrogen not greater than 2 ppm, and
- Nitrogen not greater than 60 ppm;

(b) Having cleanliness in accordance with ASTM E45 method A (Thin and Heavy): A not exceeding 1.5, B not exceeding 1.5, C not exceeding 1.0, D not exceeding 1.5;

(c) Having the following mechanical properties:

(i) With a Brinell hardness not more than 237 HBW measured in all parts of the product including mid thickness; and having a Yield Strength of 75ksi min and UTS 95ksi or more, Elongation of 18% or more and Reduction of area 35% or more; having charpy V at −75 degrees F in the longitudinal direction equal or greater than 15 ft. lbs (single value) and equal or greater than 20 ft. lbs (average of 3 specimens) and conforming to the requirements of NACE MR01–75; or

(ii) With a Brinell hardness not less than 240 HBW measured in all parts of the product including mid thickness; and having a Yield Strength of 90 ksi min and UTS 110 ksi or more, Elongation of 15% or more and Reduction of area 30% or more; having charpy V at −40 degrees F in the longitudinal direction equal or greater than 21 ft. lbs (single value) and equal or greater than 31 ft. lbs (average of 3 specimens);

(d) Conforming to ASTM A578–S9 ultrasonic testing requirements with acceptance criteria 3.2 mm flat bottom hole; and

(e) Conforming to magnetic particle inspection in accordance with AMS 2301;

(7) Alloy forged and rolled steel CTL plate over 407 mm in actual thickness and meeting the following requirements:

(a) Made from Electric Arc Furnace melted, ladle refined & vacuum degassed, alloy steel with the following chemical composition (expressed in weight percentages):

- Carbon 0.25–0.30,
- Silicon not greater than 0.25,
- Manganese not greater than 0.50,
- Nickel 3.0–3.5,
- Sulfur not greater than 0.010,
- Phosphorus not greater than 0.020,
- Chromium 1.0–1.5,
- Molybdenum 0.6–0.9,
- Vanadium 0.08 to 0.12
- Boron 0.002–0.004,
- Oxygen not greater than 20 ppm,
- Hydrogen not greater than 2 ppm, and
- Nitrogen not greater than 60 ppm.

(b) Having cleanliness in accordance with ASTM E45 method A (Thin and Heavy): A not exceeding 1.0(t) and 0.5(h), B not exceeding 1.5(t) and 1.0(h), C not exceeding 1.0(t) and 0.5(h), and D not exceeding 1.5(t) and 1.0(h);

(c) Having the following mechanical properties: A Brinell hardness not less than 350 HBW measured in all parts of the product including mid thickness; and having a Yield Strength of 145ksi or more and UTS 160ksi or more, Elongation of 15% or more and Reduction of area 35% or more; having charpy V at −40 degrees F in the transverse direction equal or greater than 20 ft. lbs (single value) and equal or greater than 25 ft. lbs (average of 3 specimens);

(d) Conforming to ASTM A578–S9 ultrasonic testing requirements with acceptance criteria 3.2 mm flat bottom hole; and

(e) Conforming to magnetic particle inspection in accordance with AMS 2301.

Excluded from the scope of the antidumping duty investigation on cut-to-length plate from the People's Republic of China are any products covered by the existing antidumping duty order on certain cut-to-length carbon steel plate from the People's Republic of China. *See Suspension Agreement on Certain Cut-to-Length Carbon Steel Plate From the People's Republic of China; Termination of Suspension Agreement and Notice of Antidumping Duty Order,* 68 FR 60,081 (Dep't Commerce Oct. 21, 2003), as amended, *Affirmative Final Determination of Circumvention of the Antidumping Duty Order on Certain Cut-to-Length Carbon Steel Plate From the People's Republic of China,* 76 FR 50,996, 50,996–97 (Dep't of Commerce Aug. 17, 2011). On August 17, 2011, the U.S. Department of Commerce found that the order covered all imports of certain cut-to-length carbon steel plate products with 0.0008 percent or more boron, by weight, from China not meeting all of the following requirements: Aluminum level of 0.02 percent or greater, by weight; a ratio of 3.4 to 1 or greater, by weight, of titanium to nitrogen; and a hardenability test (*i.e.,* Jominy test) result indicating a boron factor of 1.8 or greater.

The products subject to the investigation are currently classified in the Harmonized Tariff Schedule of the United States (HTSUS) under item numbers: 7208.40.3030, 7208.40.3060, 7208.51.0030, 7208.51.0045, 7208.51.0060, 7208.52.0000, 7211.13.0000, 7211.14.0030, 7211.14.0045, 7225.40.1110, 7225.40.1180, 7225.40.3005, 7225.40.3050, 7226.20.0000, and 7226.91.5000.

The products subject to the investigation may also enter under the following HTSUS item numbers: 7208.40.6060, 7208.53.0000, 7208.90.0000, 7210.70.3000, 7210.90.9000, 7211.19.1500, 7211.19.2000, 7211.19.4500,

7211.19.6000, 7211.19.7590, 7211.90.0000, 7212.40.1000, 7212.40.5000, 7212.50.0000, 7214.10.0000, 7214.30.0010, 7214.30.0080, 7214.91.0015, 7214.91.0060, 7214.91.0090, 7225.11.0000, 7225.19.0000, 7225.40.5110, 7225.40.5130, 7225.40.5160, 7225.40.7000, 7225.99.0010, 7225.99.0090, 7226.11.1000, 7226.11.9060, 7226.19.1000, 7226.19.9000, 7226.91.0500, 7226.91.1530, 7226.91.1560, 7226.91.2530, 7226.91.2560, 7226.91.7000, 7226.91.8000, and 7226.99.0180.

The HTSUS subheadings above are provided for convenience and customs purposes only. The written description of the scope of the investigation is dispositive.

Appendix II

List of Topics Discussed in the Preliminary Decision Memorandum

I. Summary
II. Background
III. Period of Investigation
IV. Scope Comments
V. Selection of Respondents
VI. Discussion of The Methodology
  a. Non-Market Economy Country
  b. Separate Rates
  c. The PRC-Wide Entity
  d. Application of Facts Available and Adverse Inferences
  e. Selection and Corroboration of the AFA Rate
VII. Adjustment Under Section 777a(F) of The Act
VIII. Adjustments to Cash Deposit Rates for Export Subsidies
IX. Conclusion

[FR Doc. 2016–27312 Filed 11–10–16; 8:45 am]

BILLING CODE 3510–DS–P

DEPARTMENT OF COMMERCE

International Trade Administration

[A–570–026, C–570–027]

Certain Corrosion-Resistant Steel Products From the People's Republic of China: Initiation of Anti-Circumvention Inquiries on the Antidumping Duty and Countervailing Duty Orders

AGENCY: Enforcement and Compliance, International Trade Administration, Department of Commerce.

SUMMARY: In response to requests from ArcelorMittal USA LLC, Nucor Corporation, United States Steel Corporation, and AK Steel Corporation, as well as Steel Dynamics, Inc. and California Steel Industries, (collectively, Domestic Producers), the Department of Commerce (the Department) is initiating anti-circumvention inquiries to determine whether certain imports of corrosion-resistant steel products (CORE), produced in the Socialist Republic of Vietnam (Vietnam) using carbon hot-rolled steel (HRS) and cold-rolled steel (CRS) flat products manufactured in the People's Republic of China (PRC), are circumventing the antidumping duty (AD) and countervailing duty (CVD) orders on CORE from the PRC.

DATES: Effective November 14, 2016.

FOR FURTHER INFORMATION CONTACT: Nancy Decker, AD/CVD Operations, Office VII, Enforcement and Compliance, International Trade Administration, U.S. Department of Commerce, 1401 Constitution Avenue NW., Washington, DC 20230; telephone: (202) 482–0196.

SUPPLEMENTARY INFORMATION:

Background

On June 3, 2015, AK Steel Corporation, ArcelorMittal USA LLC, Nucor Corporation, Steel Dynamics, Inc., and the United States Steel Corporation (collectively, Petitioners) filed petitions seeking the imposition of antidumping and countervailing duties on imports of CORE from India, Italy, the Republic of Korea, PRC, and Taiwan. Following the Department's affirmative determinations of dumping and countervailable subsidies,[1] and the U.S. International Trade Commission (ITC) finding of material injury,[2] the Department issued antidumping duty and countervailing duty *Orders*[3] on imports of CORE from the PRC.

On September 22, 2016, pursuant to section 781(b) of the Tariff Act of 1930, as amended (the Act), and 19 CFR 351.225(h), Steel Dynamics, Inc. and California Steel Industries submitted requests for the Department to initiate anti-circumvention inquiries to determine whether producers in Vietnam of CORE are circumventing the *Order*s on CORE from the PRC by exporting to the United States CORE products completed or assembled in various Vietnamese facilities, from inputs of HRS and CRS sourced from the PRC.[4] On September 23, 2016, pursuant to section 781(b) of the Act and 19 CFR 351.225(h), ArcelorMittal USA LLC, Nucor Corporation, United States Steel Corporation, and AK Steel Corporation, collectively, submitted a request for the Department to initiate anti-circumvention inquiries and to issue in conjunction with initiation of the inquiries preliminary determinations of circumvention of the *Orders* to suspend liquidation of imports of CORE from Vietnam.[5]

On October 17, 2016, we received comments objecting to the allegations from Domestic Producers from Metallia U.S.A., LLC, Metallia, A Division of Hartree Partners, LP, Nippon Steel and Sumiken Bussan Americas Inc., Mitsui & Co. (U.S.A.), Inc., and Marubeni-Itochu Steel America Inc. (collectively, Metallia).[6] Also on October 17, 2016, we received comments objecting to the allegations from Minmetals, Inc. (Minmetals).[7] On October 20, 2016, we received comments objecting to the allegations from China Steel Sumikin Vietnam Joint Stock Company (CSVC)[8] and from Duferco Steel Inc. (Duferco).[9] On October 21, 2016, we received comments objecting to the allegations from T.Co Metals LLC (TCO).[10] On October 26, 2016, we received comments objecting to the allegations from Summit Global Trading, a subsidiary of Sumitomo Corporation of

---

[1] *See Certain Corrosion-Resistant Steel Products from the People's Republic of China: Final Determination of Sales at Less Than Fair Value and Final Affirmative Critical Circumstances Determination, in Part,* 81 FR 35316 (June 2, 2016), and *Countervailing Duty Investigation of Certain Corrosion-Resistant Steel Products From the People's Republic of China: Final Affirmative Determination, and Final Affirmative Critical Circumstances Determination, in Part,* 81 FR 35308 (June 2, 2016).

[2] *See Certain Corrosion-Resistant Steel Products From China, India, Italy, Korea, and Taiwan; Determinations,* 81 FR 47177 (July 20, 2016).

[3] *See Certain Corrosion-Resistant Steel Products From India, Italy, the People's Republic of China, the Republic of Korea and Taiwan: Amended Final Affirmative Antidumping Determination for India and Taiwan, and Antidumping Duty Orders,* 81 FR 48390 (July 25, 2016), and *Certain Corrosion-Resistant Steel Products From India, Italy, Republic of Korea and the People's Republic of China: Countervailing Duty Order,* 81 FR 48387 (July 25, 2016) (collectively *Orders*).

[4] *See* Letter from Schagrin Associates to the Secretary of Commerce; ''*Certain Corrosion-Resistant Steel Products from China:* Request for Circumvention Ruling,'' dated September 22, 2016 (Schagrin Request).

[5] *See* Letter from Kelley Drye & Warren LLP, King & Spalding LLP, Wiley Rein LLP, and Quinn Emanuel Urquhart & Sullivan, LLP to the Secretary of Commerce, regarding ''Certain Corrosion-Resistant Steel Products from the People's Republic of China—Request for Circumvention Ruling Pursuant to Section 781(b) of the Tariff Act of 1930,'' dated September 23, 2016 (Petitioners Request).

[6] *See* Letter from Morris, Manning & Martin, LLP to the Secretary of Commerce, regarding ''Certain Cold-Rolled Steel Flat Products and Corrosion-Resistant Steel Products from the People's Republic of China: Response to Request for Anti-Circumvention Inquiry,'' dated October 17, 2016.

[7] *See* Letter from Minmetals, Inc. to the Secretary of Commerce, dated October 17, 2016.

[8] *See* Letter from Mowry & Grimson, PLLC and Sidley Austin LLP, regarding ''Certain Corrosion-Resistant Steel Products from China—Response to Petitioners' Circumvention Allegations,'' dated October 20, 2016.

[9] *See* Letter from Arent Fox, regarding ''Certain Corrosion-Resistant Steel Products from the People's Republic of China: Response to Request for Anti-Circumvention Inquiry,'' dated October 20, 2016 (Duferco Comments).

[10] *See* Letter from Drinker Biddle & Reath, LLP, regarding ''Certain Corrosion-Resistant Steel Products from the People's Republic of China: Response to Request for Anti-Circumvention Inquiry,'' dated October 21, 2016 (TCO Comments).

Americas (Sumitomo).[11] On October 28, 2016, we received comments objecting to the allegations from thyssenkrupp Materials NA, Inc.[12] On October 31, 2016, we received comments objecting to the allegations from Hoa Sen Group (HSG)[13] and from Maruichi Sun Steel Joint Stock Company (Maruichi).[14] Also on October 31, 2016, we received a letter objecting to the allegations from Vietnam Competition Authority under the Ministry of Industry and Trade of Vietnam.[15] On November 3, 2016, we received comments objecting to the allegations from Ton Dong A Company.[16]

On October 13, 2016, we received comments supporting the allegations from the United Steel Workers.[17]

Scope of the Orders

The products covered by these orders are certain flat-rolled steel products, either clad, plated, or coated with corrosion-resistant metals such as zinc, aluminum, or zinc-, aluminum-, nickel- or iron-based alloys, whether or not corrugated or painted, varnished, laminated, or coated with plastics or other non-metallic substances in addition to the metallic coating. The products covered include coils that have a width of 12.7 mm or greater, regardless of form of coil (*e.g.,* in successively superimposed layers, spirally oscillating, *etc.*). The products covered also include products not in coils (*e.g.,* in straight lengths) of a thickness less than 4.75 mm and a width that is 12.7 mm or greater and that measures at least 10 times the thickness. The products covered also include products not in coils (*e.g.,* in straight lengths) of a thickness of 4.75 mm or more and a width exceeding 150 mm and measuring at least twice the thickness. The products described above may be rectangular, square, circular, or other shape and include products of either rectangular or non-rectangular cross-section where such cross-section is achieved subsequent to the rolling process, *i.e.,* products which have been ''worked after rolling'' (*e.g.,* products which have been beveled or rounded at the edges). For purposes of the width and thickness requirements referenced above:

(1) Where the nominal and actual measurements vary, a product is within the scope if application of either the nominal or actual measurement would place it within the scope based on the definitions set forth above, and

(2) where the width and thickness vary for a specific product (*e.g.,* the thickness of certain products with non-rectangular cross-section, the width of certain products with non-rectangular shape, *etc.*), the measurement at its greatest width or thickness applies.

Steel products included in the scope of these orders are products in which: (1) Iron predominates, by weight, over each of the other contained elements; (2) the carbon content is 2 percent or less, by weight; and (3) none of the elements listed below exceeds the quantity, by weight, respectively indicated:

- 2.50 percent of manganese, or
- 3.30 percent of silicon, or
- 1.50 percent of copper, or
- 1.50 percent of aluminum, or
- 1.25 percent of chromium, or
- 0.30 percent of cobalt, or
- 0.40 percent of lead, or
- 2.00 percent of nickel, or
- 0.30 percent of tungsten (also called wolfram), or
- 0.80 percent of molybdenum, or
- 0.10 percent of niobium (also called columbium), or
- 0.30 percent of vanadium, or
- 0.30 percent of zirconium

Unless specifically excluded, products are included in this scope regardless of levels of boron and titanium.

For example, specifically included in this scope are vacuum degassed, fully stabilized (commonly referred to as interstitial-free (IF)) steels and high strength low alloy (HSLA) steels. IF steels are recognized as low carbon steels with micro-alloying levels of elements such as titanium and/or niobium added to stabilize carbon and nitrogen elements. HSLA steels are recognized as steels with micro-alloying levels of elements such as chromium, copper, niobium, titanium, vanadium, and molybdenum.

Furthermore, this scope also includes Advanced High Strength Steels (AHSS) and Ultra High Strength Steels (UHSS), both of which are considered high tensile strength and high elongation steels.

Subject merchandise also includes corrosion-resistant steel that has been further processed in a third country, including but not limited to annealing, tempering, painting, varnishing, trimming, cutting, punching and/or slitting or any other processing that would not otherwise remove the merchandise from the scope of the orders if performed in the country of manufacture of the in-scope corrosion resistant steel.

All products that meet the written physical description, and in which the chemistry quantities do not exceed any one of the noted element levels listed above, are within the scope of these orders unless specifically excluded. The following products are outside of and/or specifically excluded from the scope of these orders:

- Flat-rolled steel products either plated or coated with tin, lead, chromium, chromium oxides, both tin and lead (''terne plate''), or both chromium and chromium oxides (''tin free steel''), whether or not painted, varnished or coated with plastics or other non-metallic substances in addition to the metallic coating;
- Clad products in straight lengths of 4.7625 mm or more in composite thickness and of a width which exceeds 150 mm and measures at least twice the thickness; and
- Certain clad stainless flat-rolled products, which are three-layered corrosion-resistant flat-rolled steel products less than 4.75 mm in composite thickness that consist of a flat-rolled steel product clad on both sides with stainless steel in a 20%-60%-20% ratio.

The products subject to the orders are currently classified in the Harmonized Tariff Schedule of the United States (HTSUS) under item numbers: 7210.30.0030, 7210.30.0060, 7210.41.0000, 7210.49.0030, 7210.49.0091, 7210.49.0095, 7210.61.0000, 7210.69.0000, 7210.70.6030, 7210.70.6060, 7210.70.6090, 7210.90.6000,

[11] *See* Letter from Sandler, Travis & Rosenberg, P.A., regarding ''Opposition to Request for Anti-Circumvention Inquiry: Certain Corrosion-Resistant Steel Products and Cold-Rolled Steel Flat Products From the People's Republic of China,'' dated October 26, 2016.

[12] *See* Letter from Crowell Moring, regarding ''Certain Corrosion-Resistant and Cold-Rolled Steel Products from the People's Republic of China: Comments Opposing Petitioners' Circumvention Allegations,'' dated October 28, 2016.

[13] *See* Letter from Curtis, Mallet-Prevost, Colt & Mosle LLP, regarding ''Opposition to Request for Anti-Circumvention Inquiry; Certain Corrosion-Resistant Steel Products and Cold-Rolled Steel Flat Products from the People's Republic of China,'' dated October 31, 2016.

[14] *See* Letter from Curtis, Mallet-Prevost, Colt & Mosle LLP, regarding ''Opposition to Request for Anti-Circumvention Inquiry; Certain Corrosion-Resistant Steel Products and Cold-Rolled Steel Flat Products from the People's Republic of China,'' dated October 31, 2016.

[15] *See* Letter from Vietnam Competition Authority under the Ministry of Industry and Trade of Vietnam regarding ''Certain Corrosion-Resistant Steel Products from China; Certain Cold-Rolled Steel Flat Products from China—Opposition to Initiation of Anticircumvention Proceedings,'' dated October 31 2016, placed on the record on November 4, 2016.

[16] *See* Letter from Curtis, Mallet-Prevost, Colt & Mosle LLP, regarding ''Opposition to Request for Anti-Circumvention Inquiry; Certain Corrosion-Resistant Steel Products and Cold-Rolled Steel Flat Products from the People's Republic of China,'' dated November 3, 2016.

[17] *See* Letter from United Steel Workers, regarding ''Corrosion-Resistant Steel Products from the People's Republic of China,'' dated October 13, 2016.

7210.90.9000, 7212.20.0000, 7212.30.1030, 7212.30.1090, 7212.30.3000, 7212.30.5000, 7212.40.1000, 7212.40.5000, 7212.50.0000, and 7212.60.0000.

The products subject to the orders may also enter under the following HTSUS item numbers: 7210.90.1000, 7215.90.1000, 7215.90.3000, 7215.90.5000, 7217.20.1500, 7217.30.1530, 7217.30.1560, 7217.90.1000, 7217.90.5030, 7217.90.5060, 7217.90.5090, 7225.91.0000, 7225.92.0000, 7225.99.0090, 7226.99.0110, 7226.99.0130, 7226.99.0180, 7228.60.6000, 7228.60.8000, and 7229.90.1000.

The HTSUS subheadings above are provided for convenience and customs purposes only. The written description of the scope of the orders is dispositive.

Merchandise Subject to the Anti-Circumvention Inquiries

These anti-circumvention inquiries cover CORE exported from Vietnam produced from HRS or CRS manufactured in the PRC.

Domestic Producers request that the Department treat CORE imports from Vietnam as subject merchandise under the scope of the *Orders* and impose cash deposit requirements for estimated AD and CVD duties on all imports of CORE from Vietnam.[18]

Initiation of Anti-Circumvention Inquiries

Section 781(b)(1) of the Act provides that the Department may find circumvention of an AD or CVD order when merchandise of the same class or kind subject to the order is completed or assembled in a foreign country other than the country to which the order applies. In conducting an anti-circumvention inquiry, under section 781(b)(1) of the Act, the Department will rely on the following criteria: (A) Merchandise imported into the United States is of the same class or kind as any merchandise produced in a foreign country that is subject of an antidumping or countervailing duty order or finding; (B) before importation into the United States, such imported merchandise is completed or assembled in another foreign country from merchandise which is subject to the order or merchandise which is produced in the foreign country that is subject to the order; (C) the process of assembly or completion in the foreign country referred to in section (B) is minor or insignificant; (D) the value of the merchandise produced in the foreign country to which the AD or CVD order applies is a significant portion of the total value of the merchandise exported to the United States; and (E) the administering authority determines that action is appropriate to prevent evasion of such order or finding. As discussed below, Domestic Producers provided evidence with respect to these criteria.

A. Merchandise of the Same Class or Kind

The Domestic Producers claim that CORE exported to the United States is the same class or kind as the CORE covered by the *Orders* in these inquiries.[19] Domestic Producers provided evidence to show that the merchandise from Vietnam enters the United States under the same tariff classification as the subject merchandise.[20]

B. Completion of Merchandise in a Foreign Country

Section 78l(b)(l)(B)(ii) of the Act requires the Department to determine if, ''before import into the United States, such imported merchandise is completed or assembled in another foreign country from merchandise which is produced in the foreign country with respect to which such order or finding applies.'' Domestic Producers presented evidence demonstrating how CORE in Vietnam is produced from HRS or CRS manufactured and imported from the PRC. Additionally, Domestic Producers provided evidence that there is currently no capacity in Vietnam to produce HRS, and thus any CORE manufactured in Vietnam must use imported HRS.[21] Domestic Producers stated that while imports of CORE from the PRC into the United States significantly decreased after the imposition of the *Orders,* imports of CORE from Vietnam into the United States have increased significantly. All the while, imports of Chinese HRS and CRS into Vietnam have also increased significantly.[22] Finally, Domestic Producers state that China Minmetals Corporation, the state-owned Chinese trading company, currently has arrangements to ship HRS and/or CRS from the PRC to Vietnam, and to convert the PRC-sourced HRS or CRS to CORE for export to the United States with the purpose of evading the *Orders*.[23]

C. Minor or Insignificant Process

Under section 781(b)(2) of the Act, the Department is required to consider five factors to determine whether the process of assembly or completion is minor or insignificant. Domestic Producers alleged that the production of HRS and CRS in the PRC, which is subsequently further processed into CORE in Vietnam, comprises the majority of the value associated with the merchandise imported from Vietnam into the United States, and that the processing of HRS and CRS into CORE which occurs in Vietnam adds relatively little to the overall value.

(1) Level of Investment

Domestic Producers argue that the level of investment necessary to construct a factory which can produce CORE from CRS or HRS in Vietnam is insignificant. In support of their contention, Domestic Producers compare the investment necessary to install re-rolling and coating facilities with the investment necessary to produce HRS or CRS using a fully-integrated production process for melting iron and casting steel.[24] Domestic Producers estimate that the investment necessary to construct re-rolling and coating (in some cases including a CRS mill) facilities in Vietnam that uses HRS and/or CRS substrate to produce CORE would be between $70 million and $90 million, with possible expansions of $150 million.[25] In contrast, Domestic Producers estimate that the investment necessary to construct a fully integrated steel production facility, including a blast furnace or basic oxygen furnace in the PRC that produces HRS and/or CRS would be between $295 million and $10.1 billion.[26] Domestic Producers also argue that using investment levels in the PRC for basic steel making including a blast furnace or basic oxygen furnace, as opposed to an electric arc furnace which relies on scrap steel, is appropriate as approximately 90 percent of the steel production in the PRC comes from a fully integrated steel mill.[27]

[18] *See* Schagrin Request at 1–2*; and see* Petitioners Request at 1–2.

[19] *See* Schagrin Request at 9, Petitioners Request at 8.

[20] *See* Petitioners Request at Attachment 1.

[21] *See* Schagrin Request at 6 and 13 and Exhibits 2, 4, and 5, Petitioners Request at 10 and Attachments 4 and 5.

[22] *See* Schagrin Request at 11–16 and Exhibits 1 and 7, Petitioners Request at 9–11 and Attachments 1 and 3.

[23] *See* Schagrin Request at 18 and Exhibit 13.

[24] *See* Schagrin Request at 18–20 and Exhibits 14–16 and 19, Petitioners Request at 12–14 and Attachments 7–10.

[25] *See* Schagrin Request at 19–20 and Exhibits 15, 16, and 19, Petitioners Request at 14 and Attachment 10.

[26] *See* Schagrin Request at 19 and Exhibit 14, Petitioners Request at 13–14 and Attachment 7–9.

[27] *See* Petitioners Request at 13 at Attachment 8.

(2) Level of Research and Development

Domestic Producers assert that the level of research and development in Vietnam to produce CORE from substrate is either minimal or non-existent. Domestic Producers state that Vietnam is importing technology from other sources and countries, rather than developing its own technology.[28]

(3) Nature of Production Process in Vietnam

According to Domestic Producers, the additional processing undertaken by Vietnamese producers of CORE is minimal.[29] Conversely, the manufacturing process to produce HRS is complex. Specifically, the manufacturing processes for HRS consist of three stages: melting and refining, casting molten steel into semi-finished forms, and hot-rolling the semi-finished forms into HRS.[30] In contrast, the processing of CORE from HRS involves only unrolling, descaling, cold-reducing (if HRS), and coating or plating, all of which is done by continuous processing lines.[31]

(4) Extent of Production in Vietnam

Domestic Producers argue that production facilities in Vietnam are more limited compared to facilities in the PRC. This is because Vietnam has fewer than a dozen large producers of flat steel products.[32] Moreover, Domestic Producers cite information indicating Vietnam had no HRS capacity, only a few cold-rolling facilities, and limited CORE production facilities, with only one coating facility that produces galvannealed steel sheet.[33]

(5) Value of Processing in Vietnam

Domestic Producers assert that production of HRS or CRS in the PRC accounts for a large percentage of the total value of CORE that is produced in Vietnam. Using information from the recent CORE investigation by the ITC, Domestic Producers state that the price of HRS is between 69 percent and 79 percent of the price of CORE, and CRS is between 84 percent and 90 percent of the price of CORE.[34] Thus, the value added in Vietnam is estimated to be between 10 percent and 31 percent, depending on whether the underlying substrate is already cold-rolled. Using a different approach focusing solely on the cost of production in Vietnam, Domestic Producers estimate that the cost of manufacture for the CORE operations in Vietnam, including both cold-rolling and coating, is a small portion of the export value.[35]

D. Value of Merchandise Produced in the PRC

As Domestic Producers argued previously (and noted above), the price of HRS is between 69 percent and 79 percent of the price of CORE and the price of CRS is between 84 percent and 90 percent.[36] Alternatively, using the other method (comparing the cost of manufacture of CORE in Vietnam to the export value of CORE), the value of the Chinese inputs constitute a significant portion of the total value of the merchandise exported to the United States.[37]

E. Additional Factors To Consider in Determining Whether Inquiry Is Warranted

Section 781(b)(3) of the Act directs the Department to consider additional factors in determining whether to include merchandise assembled or completed in a foreign country within the scope of the *Orders,* such as: ''(A) the pattern of trade, including sourcing patterns, (B) whether the manufacturer or exporter of the merchandise . . . is affiliated with the person who uses the merchandise . . . to assemble or complete in the foreign country the merchandise that is subsequently imported into the United States, and (C) whether imports into the foreign country of the merchandise . . . have increased after the initiation of the investigation which resulted in the issuance of such order or finding.''

(1) Pattern of Trade

Domestic Producers note that at the time the petition was filed for the original investigation of CORE from the PRC, Vietnam was a very small source of U.S. CORE imports (in 2014), and that the volume of imports from Vietnam from January 2015 to July of 2015 was low.[38] However, subsequent to the preliminary injury determination by the ITC, the last five months of 2015 saw imports of CORE from Vietnam increase.[39] After the preliminary affirmative determination by the Department for countervailing duties on CORE from the PRC in November 2015, Domestic Producers note that imports of CORE from Vietnam surged dramatically.[40] Domestic Producers further note that imports of CORE from the PRC decreased substantially over the same time period.[41] No other factual information on the record contradicts this claim.

(2) Affiliation

Domestic Producers have provided no information regarding the affiliation between producers of HRS or CRS in the PRC and producers of CORE in Vietnam. However, Domestic Producers assert that China Minmetals Corporation, which as noted above currently has arrangements to ship HRS or CRS from the PRC to Vietnam and convert the HRS or CRS to CORE for export to the United States, is affiliated with a major Chinese steel producer.[42]

(3) Increase of HRS and CRS Shipments From the PRC to Vietnam After Initiation of the AD and CVD Investigation of CORE From the PRC

Domestic Producers presented evidence indicating that shipments of HRS and CRS from the PRC to Vietnam have increased since the initiation of the CORE investigations.[43] No other factual information contradicts this claim.

Analysis of the Allegation

Based on our analysis of Domestic Producers' anti-circumvention inquiry allegation, the Department determines that the Domestic Producers have satisfied the criteria under section 781(b)(1) of the Act to warrant an initiation of anti-circumvention inquiries of the AD and CVD *Orders* on CORE from the PRC.

With regard to whether the merchandise from Vietnam is of the same class or kind as the merchandise produced in the RC, Domestic Producers presented information to the Department indicating that, pursuant to section 781(b)(1)(A) of the Act, the merchandise being produced in and/or exported from Vietnam may be of the

[28] *See* Schagrin Request at 20–21 and Exhibits 2 and 19, Petitioners Request at 14–15 and Attachments 1, 4, and 11.

[29] *See* Schagrin Request at 18 and 21, Petitioners Request at 15 and Attachments 12–13 (ITC reports on HRS and CORE).

[30] *See* Petitioners Request at 15–18 and Attachment 12.

[31] *Id.,* at 18 and Attachment 13.

[32] *See* Schagrin Request at 21 and Exhibit 2.

[33] *See* Petitioners Request at 18–19 and Attachment 4, Schagrin Request at 21 and Exhibit 2.

[34] *See* Schagrin Request at 22 and Exhibit 17.

[35] *See* Petitioners Request at 19–20 and Attachment 14. This estimate incorporates business proprietary information, but falls within the range of 10 percent to 31 percent identified above.

[36] *See* Schagrin Request at 22 and Exhibit 17.

[37] *See* Petitioners Request at 20 and Attachment 14.

[38] *Id.,* at 21 and Attachment 1.

[39] *Id.*

[40] *See* Petitioners Request at 21–22 and Attachment 1, Schagrin Request at 23 and Exhibit 18.

[41] *See* Petitioners Request at 6 and 21–22 and Attachment 1, Schagrin Request at 23 and Exhibit 18.

[42] *See* Schagrin Request at 18.

[43] *Id.,* at 14–16 and 24 and Exhibit 7, Petitioners Request at 9–11, 22–23, and Attachment 3.

same class or kind as CORE produced in the PRC, which is subject to the *Orders.*[44] Consequently, the Department finds that Domestic Producers provided sufficient information in their request regarding the class or kind of merchandise to support the initiation of these anti-circumvention inquiries.

With regard to completion or assembly of merchandise in a foreign country, pursuant to section 781(b)(1)(B) of the Act, Domestic Producers also presented information to the Department indicating that the CORE exported from Vietnam to the United States is produced in Vietnam using HRS or CRS from the PRC that accounts for a significant portion of the total costs related to the production of CORE.[45] We find that the information presented by Domestic Producers regarding this criterion supports their request to initiate these anti-circumvention inquiries.

The Department finds that Domestic Producers sufficiently addressed the factors described in section 781(b)(1)(C) and 781(b)(2) of the Act regarding whether the assembly or completion of CORE in Vietnam is minor or insignificant. In particular, Domestic Producers' submission asserts that: (1) The level of investment of CORE facilities is minimal when compared with the level of investment for basic steel-making facilities; (2) research and development is not taking place in Vietnam; (3) the production process involves the simple processing of HRS or CRS from a country subject to the *Orders;* (4) the production facilities in Vietnam are more limited compared to facilities in the PRC; and (5) the value of the processing performed in Vietnam is minimal, as the production of HRS and CRS in the PRC accounts for 68 to 90 percent of the value of finished CORE.[46]

With respect to the value of the merchandise produced in the PRC, pursuant to section 781(b)(1)(D) of the Act, Domestic Producers relied on published sources, a simulated cost structure for producing CORE in Vietnam, and arguments in the ''minor or insignificant process'' portion of their anti-circumvention allegations to indicate that the value of the major inputs, HRS or CRS, produced in the PRC may be significant relative to the total value of the CORE exported from Vietnam to the United States.[47] We find that this information adequately meets the requirements of this factor, as discussed above, for the purposes of initiating these anti-circumvention inquiries.

With respect to the additional factors listed under section 781(b)(3) of the Act, we find that Domestic Producers presented evidence indicating that shipments of CORE from Vietnam to the United States increased since the imposition of the *Orders* and that shipments of HRS and CRS from the PRC to Vietnam also increased since the *Orders* took effect, further supporting initiation of these anti-circumvention inquiries.[48]

Accordingly, we are initiating a formal anti-circumvention inquiry concerning the AD and CVD Orders on CRS from the PRC, pursuant to section 781(b) of the Act.

In connection with these anti-circumvention inquiries, in order to determine, (1) the extent to which PRC-sourced HRS or CRS is further processed into CORE in Vietnam before shipment to the United States, (2) the extent to which a country-wide finding applicable to all exports might be warranted, as alleged by Domestic Producers, and (3) whether the process of turning PRC-sourced HRS or CRS into CORE is minor or insignificant, the Department will issue questionnaires to Vietnamese producers or exporters of CORE to the United States. The Domestic Producers did not identify any Vietnamese producers or exporters in their allegations.[49] The Department will issue questionnaires to solicit information from the Vietnamese producers and exporters concerning their shipments of CORE to the United States and the origin of the imported HRS or CRS being processed into CORE. Companies failing to respond completely and timely to the Department's questionnaire may be deemed uncooperative and an adverse inference may be applied in determining whether such companies are circumventing the *Orders. See* section 776 of the Act.

Finally, while we believe sufficient factual information has been submitted by Domestic Producers supporting their request for an inquiry, we do not find that the record supports the simultaneous issuance of a preliminary ruling. Such inquiries are by their nature complicated and require additional information regarding production in both the country subject to the order and the third country completing the product. As noted above, the Department intends to request additional information regarding the statutory criteria to determine whether shipments of CORE from Vietnam are circumventing the AD and CVD *Orders* on CORE from the PRC. Thus, further development of the record is required before a preliminary ruling can be issued.

Notification to Interested Parties

In accordance with 19 CFR 351.225(e), the Department finds that the issue of whether a product is included within the scope of an order cannot be determined based solely upon the application and the descriptions of the merchandise. Accordingly, the Department will notify by mail all parties on the Department's scope service list of the initiation of anti-circumvention inquiries. In addition, in accordance with 19 CFR 351.225(f)(1)(i) and (ii), in this notice of initiation issued under 19 CFR 351.225(e), we have included a description of the product that is the subject of these anti-circumvention inquiries (*i.e.,* CORE that contains the characteristics as provided in the scope of the *Orders*), and an explanation of the reasons for the Department's decision to initiate these anti-circumvention inquiries, as provided above.

In accordance with 19 CFR 351.225(l)(2), if the Department issues affirmative preliminary determinations, we will then instruct CBP to suspend liquidation and require cash deposits of estimated antidumping and countervailing duties, at the applicable rates, for each unliquidated entry of the merchandise at issue, entered or withdrawn from warehouse for consumption on or after the date of initiation of the inquiries. The Department will establish a schedule for questionnaires and comments for these inquiries. In accordance with section 781(f) of the Act and 19 CFR 351.225(f)(5), the Department intends to issue its final determinations within 300 days of the date of publication of this initiation.

This notice is published in accordance with 19 CFR 351.225(f).

Dated: November 4, 2016.

Paul Piquado,

Assistant Secretary for Enforcement and Compliance.

[FR Doc. 2016–27327 Filed 11–10–16; 8:45 am]

BILLING CODE 3510–DS–P

[44] *See* Schagrin Request at 9, Petitioners Request at 8 and Attachment 1.

[45] See Schagrin Request at 6 and 11–18 and Exhibits 1–2, 4–5, 7 and 13, Petitioners Request at 8–11 and Attachments 1–5.

[46] *See* discussion of these five factors above.

[47] *See* Schagrin Request at 22 and Exhibits 17, Petitioners Request at 20 and Attachments 14.

[48] *See* Schagrin Request at 14–16 and 24 and Exhibit 7, Petitioners Request at 9–11, 22–23, and Attachment 3.

[49] Domestic Producers only identified a Chinese trading company, China Minmetals Corporation, in its allegation. *See* Schagrin Request at 18.

DEPARTMENT OF COMMERCE

National Institute of Standards and Technology

Open Meeting of the Commission on Enhancing National Cybersecurity

AGENCY: National Institute of Standards and Technology, Commerce.

ACTION: Notice.

SUMMARY: The Commission on Enhancing National Cybersecurity will meet Monday, November 21, 2016 from 8:00 a.m. until 10:00 a.m. Eastern Time as a virtual meeting with dial-in audio conferencing participation only. The primary purpose of the meeting is to discuss the challenges and opportunities for organizations and consumers in securing the digital economy. In particular, the meeting will address: (1) Approval of public meeting minutes; (2) briefing and readout of working group meeting minutes; and (3) public comment.

The meeting will support detailed recommendations to strengthen cybersecurity in both the public and private sectors while protecting privacy, ensuring public safety and economic and national security, fostering discovery and development of new technical solutions, and bolstering partnerships between Federal, State, local, tribal and territorial governments and the private sector in the development, promotion, and use of cybersecurity technologies, policies, and best practices. Interested members of the public will be able to participate in the meeting from remote locations by calling into a central phone number.

DATES: The meeting will be held on Monday, November 21, 2016 from 8:00 a.m. until 10:00 a.m. Eastern Time.

ADDRESSES: The meeting will be a virtual meeting with dial-in audio participation only. The meeting is open to the public and interested parties are requested to contact Sara Kerman at the contact information indicated in the **FOR FURTHER INFORMATION CONTACT** section of this notice in advance of the meeting for dial-in instructions.

Written comments may be submitted by mail to Commission Executive Director, National Institute of Standards and Technology, 100 Bureau Drive, Mail Stop 2000, Gaithersburg, Maryland 20899–8900, or by email to *cybercommission@nist.gov.* Please use subject line ''Open Meeting of the Commission on Enhancing National Cybersecurity''.

FOR FURTHER INFORMATION CONTACT: Sara Kerman, Information Technology Laboratory, National Institute of Standards and Technology, 100 Bureau Drive, Stop 2000, Gaithersburg, MD 20899–8900, telephone: 301–975–4634, or by email at: *eo-commission@nist.gov.* Please use subject line ''*Open Meeting of the Commission on Enhancing National Cybersecurity*''.

SUPPLEMENTARY INFORMATION: Pursuant to the Federal Advisory Committee Act, as amended, 5 U.S.C. App., notice is hereby given that the Commission on Enhancing National Cybersecurity (''the Commission'') will meet Monday, November 21, 2016 from 8:00 a.m. until 10:00 a.m. Eastern Time. All sessions will be open to the public. The Commission is authorized by Executive Order 13718, Commission on Enhancing National Cybersecurity.[1] The Commission was established by the President and will make detailed recommendations to strengthen cybersecurity in both the public and private sectors while protecting privacy, ensuring public safety and economic and national security, fostering discovery and development of new technical solutions, and bolstering partnerships between Federal, State, local, tribal and territorial governments and the private sector in the development, promotion, and use of cybersecurity technologies, policies, and best practices.

The agenda is expected to include the following items:

—Introductions
—Approval of public meeting minutes
—Briefing and readout of working group meeting minutes
—Public comment
—Conclusion

Note that agenda items may change without notice. The final agenda will be posted on *http://www.nist.gov/cybercommission.* Attendees are asked to self-identify when they dial-in and lines will be available on a first-come, first-served basis.

Public Participation: Individuals and representatives of organizations who would like to offer comments and suggestions related to the Committee's affairs are invited to request an opportunity to speak and detailed instructions on how to join the call from a remote location in order to participate by submitting their request to Sara Kerman at the contact information indicated in the **FOR FURTHER INFORMATION CONTACT** section of this notice, no later than 5:00 p.m. Eastern Time on November 17, 2016.

Approximately 15 minutes will be reserved from 9:45 a.m. until 10:00 a.m. Eastern Time for public comments; speaking times will be assigned on a first-come, first-served basis. The amount of time per speaker will be determined by the number of requests received, but is likely to be about three minutes each. Questions from the public will not be considered during this period. Speakers who wish to expand upon their oral statements, those who had wished to speak but could not be accommodated, and those who were unable to participate are invited to submit written statements by mail to Commission Executive Director, National Institute of Standards and Technology, 100 Bureau Drive, Mail Stop 2000, Gaithersburg, Maryland 20899–8900, or by email to *cybercommission@nist.gov.* Please use subject line ''*Open Meeting of the Commission on Enhancing National Cybersecurity.*''

All participants of the meeting are required to pre-register. Anyone wishing to participate must register by 5:00 p.m. Eastern Time, November 17, 2016, in order to be included. Please submit your full name, email address, and phone number Sara Kerman, National Institute of Standards and Technology, 100 Bureau Drive, Mail Stop 2000, Gaithersburg, Maryland 20899 or 301–975–4634, or electronically by email to *eo-commission@nist.gov.* After pre-registering, participants will be provided with detailed instructions on how to join the call from a remote location in order to participate.

Pursuant to 41 CFR 102–3.150(b), this **Federal Register** notice for this meeting is being published fewer than 15 calendar days prior to the meeting as exceptional circumstances exist. It is imperative that the meeting be held on November 21, 2016 to accommodate the scheduling priorities of the key participants, who must maintain a strict schedule of meetings in order to complete the Commission's report by December 1, 2016, as required by Executive Order 13718 § 3(e) (February 9, 2016). Notice of the meeting is also posted on the National Institute of Standards and Technology's Web site at *http://www.nist.gov/cybercommission.*

Kevin Kimball,

Chief of Staff.

[FR Doc. 2016–27258 Filed 11–10–16; 8:45 am]

BILLING CODE 3510–13–P

[1] *https://www.federalregister.gov/articles/2016/02/12/2016-03038/commission-on-enhancing-national-cybersecurity.*

DEPARTMENT OF COMMERCE

National Oceanic and Atmospheric Administration

RIN 0648–XF028

North Pacific Fishery Management Council; Public Meeting

AGENCY: National Marine Fisheries Service (NMFS), National Oceanic and Atmospheric Administration (NOAA), Commerce.

ACTION: Notice of public teleconference meetings.

SUMMARY: The North Pacific Fishery Management Council (Council) Electronic Monitoring Workgroup (EMWG) will hold public meetings on November 28 and 29, 2016.

DATES: The meetings will begin at 12 p.m. on Monday, November 28, 2016 and end at 5 p.m. (Alaska Time) on November 29, 2016, to view the agenda **SUPPLEMENTARY INFORMATION**.

ADDRESSES: The meetings will be held in the Tokyo Boardroom at The Conference Center of Seattle-Tacoma International Airport, 1708 International Blvd., Seattle, WA 98158. The meeting will be available by teleconference, at (907) 271–2896.

Council address: North Pacific Fishery Management Council, 605 W. 4th Ave., Suite 306, Anchorage, AK 99501–2252; telephone (907) 271–2809.

FOR FURTHER INFORMATION CONTACT: Diana Evans, Council staff; telephone: 907–271–2809.

SUPPLEMENTARY INFORMATION:

Agenda

Monday November 28, 2016 and Tuesday November 29, 2016

The agenda will include (a) EM Integration Analysis; (b) 2017 Pre-Implementation Plan; (c) Research and development in 2017 and (d) Other business and scheduling. The Agenda is subject to change, and the latest version will be posted, at *http://www.npfmc.org/.*

Special Accommodations

These meetings are physically accessible to people with disabilities. Requests for sign language interpretation or other auxiliary aids should be directed to Shannon Gleason, at (907) 271–2809, at least 7 business days prior to the meeting date.

Authority: 16 U.S.C. 1801 *et seq.*

Dated: November 8, 2016.

Tracey L. Thompson,

Acting Director, Office of Sustainable Fisheries, National Marine Fisheries Service.

[FR Doc. 2016–27278 Filed 11–10–16; 8:45 am]

BILLING CODE 3510–22–P

DEPARTMENT OF COMMERCE

National Oceanic and Atmospheric Administration

RIN 0648–XF020

Pacific Fishery Management Council; Public Workshop

AGENCY: National Marine Fisheries Service (NMFS), National Oceanic and Atmospheric Administration (NOAA), Commerce.

ACTION: Notice of a public workshop.

SUMMARY: The Pacific Fishery Management Council (Pacific Council) is sponsoring a workshop to review methods used to model productivity in stock assessments. The workshop is open to the public.

DATES: The Productivity Workshop will commence at 9 a.m. PST, Tuesday, December 6, 2016 and continue until 5 p.m. or as necessary to complete business for the day. The workshop will reconvene on Wednesday, December 7 and Thursday, December 8, starting at 9 a.m. PST each day and continuing as necessary to complete business for the day.

ADDRESSES: The Productivity Workshop will be held at the National Marine Fishery Service Western Regional Center's Sand Point facility, Alaska Fisheries Science Center, 7600 Sand Point Way NE., Seattle, WA 98115; telephone: (206) 526–4000. The meeting will be held in Building 4, Traynor Room 2076.

Council address: Pacific Fishery Management Council, 7700 NE Ambassador Place, Suite 101, Portland, OR 97220–1384; telephone: (503) 820–2280.

FOR FURTHER INFORMATION CONTACT: Mr. John DeVore, Pacific Council; telephone: (503) 820–2413.

SUPPLEMENTARY INFORMATION: The purpose of the Productivity Workshop is to review proposed methods for modeling stock productivity in assessments for groundfish and coastal pelagic species. Public comments during the workshop will be received from attendees at the discretion of the chair.

Although non-emergency issues not identified in the workshop agenda may come before the workshop participants for discussion, those issues may not be the subject of formal action during this workshop. Formal action at the workshop will be restricted to those issues specifically listed in this notice and any issues arising after publication of this notice that require emergency action under Section 305(c) of the Magnuson-Stevens Fishery Conservation and Management Act, provided the public has been notified of the workshop participants' intent to take final action to address the emergency.

All visitors to the National Marine Fisheries Service Western Regional Center's Sand Point facility should bring one of the following forms of identification:

- Enhanced Driver's License from the states of Washington, Minnesota, or New York
- U.S. Passport
- U.S. Passport Card
- U.S. Department of Defense CAC
- U.S. Federal agency HSPD–12 compliant ID cards
- U.S. Veterans ID
- U.S. Military Dependent's ID Card
- U.S. Trusted Traveler Card—Global Entry, SENTRI, or NEXUS
- U.S. Transportation Workers Identification Credential (TWIC)
- State issued Real ID Compliant Driver's Licenses and Identification Cards

Visitors who are foreign nationals (defined as a person who is not a citizen or national of the United States) will require additional security clearance to access the Western Regional Center's Sand Point facility. Foreign national visitors should contact Dr. Martin Dorn at (206) 526–6548 at least two weeks prior to the meeting date to initiate the security clearance process.

Special Accommodations

This meeting is physically accessible to people with disabilities. Requests for auxiliary aids should be directed to Mr. Kris Kleinschmidt at (503) 820–2425 at least 10 working days prior to the workshop date.

Dated: November 8, 2016.

Tracey L. Thompson,

Acting Deputy Director, Office of Sustainable Fisheries, National Marine Fisheries Service.

[FR Doc. 2016–27301 Filed 11–10–16; 8:45 am]

BILLING CODE 3510–22–P

DEPARTMENT OF COMMERCE

National Oceanic and Atmospheric Administration

RIN 0648–XF014

General Advisory Committee to the United States Section to the Inter-American Tropical Tuna Commission; Statement of Organization, Practices, and Procedures

AGENCY: National Marine Fisheries Service (NMFS), National Oceanic and Atmospheric Administration (NOAA), Commerce.

ACTION: Notice.

SUMMARY: On May 27, 2016, the General Advisory Committee to the United States Section to the Inter-American Tropical Tuna Commission adopted the Statement of Organization, Practices, and Procedures (SOPP) as set forth. The General Advisory Committee may revise or amend the SOPP in future meetings.

FOR FURTHER INFORMATION CONTACT: Rachael Wadsworth, NMFS, West Coast Region, (562) 980–4036.

Statement of Organization, Practices, and Procedures

I. Authority

The General Advisory Committee (Committee) to the U.S. Section to the Inter-American Tropical Tuna Commission (IATTC) is established pursuant to Section 4 of the Tuna Conventions Act (TCA; 16 U.S.C. 953).

II. Committee Organization

A. Objectives and Scope of Activities

The purpose of the Committee shall be to serve in an advisory capacity to the U.S. National Section of the IATTC (U.S. Section) with respect to the U.S. participation in the work of the IATTC, with particular reference to development of U.S. policies, positions, and negotiating tactics. The U.S. Section consists of the four U.S. Commissioners to the IATTC, who represent the United States with advisors from the U.S. Department of State, the National Marine Fisheries Service (NMFS), and other agencies of the U.S. Government. NMFS and U.S. Department of State representatives will be acting for the Secretaries of Commerce and State, respectively, to fulfill duties described in this Statement of Organization, Practices, and Procedures.

B. Support Services

NMFS and the Secretary of State shall furnish the Committee with relevant information concerning fisheries and international fishery agreements. NMFS shall provide to the Committee in a timely manner such administrative and technical support services as are necessary for its effective functioning.

Executive Secretariat. NMFS shall provide an Executive Secretariat for each meeting of the Committee. The Executive Secretariat shall approve and attend all meetings and shall advise the Chair to adjourn, or shall herself/himself adjourn, any meeting when in the public interest. The Executive Secretariat will prepare an agenda and circulate it amongst Committee members in advance of the meeting for feedback and approve the agenda. The Executive Secretariat shall ensure that the minutes of each meeting are prepared, of which the accuracy shall be certified by the Chair. The Executive Secretariat will also maintain copies of all reports the Committee receives, issues, or approves.

C. Procedures

The Committee shall determine its organization and prescribe its practices and procedures for carrying out its functions under the TCA, the Magnuson-Stevens Fishery Conservation and Management Act (16 U.S.C. 1801 *et seq.*), and the Antigua Convention. The Committee shall publish and make available to the public a statement of its organization, practices, and procedures.

D. Agency or Official to Whom the Committee Reports

The Committee shall report, either orally or in writing, to NMFS, U.S. Department of State, and to the U.S. Section.

III. Membership and Terms

A. Membership

The Secretary of Commerce, in consultation with the Secretary of State, shall appoint the members of the Committee.

Committee composition. The Committee shall have no fewer than 5, or no more than 25, individuals, and the ex-officio members will be counted towards the total number of individuals. The Committee shall be representative of the various groups concerned with the fisheries covered by the Antigua Convention, including nongovernmental conservation organizations, providing an equitable balance among such groups to the maximum extent practicable.

Ex-officio members. The Chair of the Pacific Fishery Management Council's Advisory Subpanel for Highly Migratory Fisheries and the Chair of the Western Pacific Regional Fishery Management Council's Advisory Panel shall be ex-officio members of the Committee by virtue of their positions with those Councils.

B. Appointment Terms

Each member of the Committee shall serve for a term of three years and is eligible for reappointment.

IV. Officers and Terms of Office

A. Committee Chair and Vice-Chair

Every 3 years, the Committee will appoint its Chair for a term of 3 years. Every 3 years, the Committee will appoint its Vice-Chair for a term of 3 years. Each Chair shall be eligible for reappointment for up to 2 terms as Chair. Similarly, each Vice-Chair shall be eligible for reappointment for up to 2 terms as Vice-Chair. If a vacancy occurs, the Committee shall appoint a Chair or Vice-Chair to serve the remainder of the term; such service shall not count toward the term limits.

V. Subcommittee

A. Subcommittee

NMFS shall appoint a Scientific Advisory Subcommittee to advise the Committee, pursuant to Section 4 of the TCA.

VI. Administrative Matters

A. Meetings

All meetings of the Committee shall be open to the public, except when in executive session, which shall be closed to the public. Officers of the U.S. Department of State, U.S. Department of Commerce, the U.S. Coast Guard, and representatives of any other agencies of the U.S. Government responsible for matters pertaining to fisheries in the eastern Pacific Ocean may attend and participate in all meetings of the Committee.

Sensitive information, including discussion of the U.S. negotiating position for upcoming IATTC meetings, other than input from the public, may be discussed in executive session. NMFS shall be responsible for providing notice of meetings to the public in a timely fashion. The Committee is not subject to the Federal Advisory Committee Act (5 U.S.C. App.).

B. Number and Frequency of Meetings

The Committee shall meet at least once per year. If sufficient funds are available, one of the Committee meetings shall be an in-person meeting. All meetings shall be called by the Executive Secretariat, subject to the approval of the Commissioner who is also a full-time employee of the U.S. Government. There shall be no requirement of a quorum.

C. Attendance in U.S. Delegation

The Committee shall be invited to attend all non-executive meetings of the U.S. delegation and at such meetings shall be given opportunity to examine and to be heard on all proposed programs of investigation, reports, recommendations, and regulations of the IATTC. Participation as a member of the U.S. delegation shall be subject to such limits as may be placed on the size of the delegation.

D. Closed Meetings

Executive sessions of the Committee shall be closed to the public, and all discussion occurring in these sessions shall not be disclosed publicly unless otherwise specified by an appropriate U.S. Government official. The Committee may choose to invite the Subcommittee members that are not also Committee members to executive sessions of the Committee. Below are examples of when the Committee may go into executive sessions:

a. The Committee is considering the U.S. negotiating position prior or subsequent to international meetings.

b. The Committee is being briefed on litigation in which the Committee is interested.

c. The Committee is discussing internal operational matters.

To the extent practicable, notice of closed sessions on matters of substance should be included in the **Federal Register** notice announcing the Committee meeting.

E. Duration

The Committee is a statutory body and may be terminated only by law.

F. Recordkeeping

The Executive Secretariat shall prepare the minutes of each meeting, which shall at a minimum contain: (1) A record of all persons present; (2) the names of persons from the public who attend the meeting and their interests or affiliations; (3) a description of matters and materials discussed and conclusions reached and the rationale for same; and (4) copies of all reports received, issued, or approved by the Committee. The Executive Secretariat shall distribute the minutes to the Committee members for their review. The Chair of the Committee shall certify the accuracy of all minutes of the Committee.

The Executive Secretariat shall endeavor to provide any draft U.S. IATTC proposals to the Committee members at least five days prior to the meeting of the Committee. The Executive Secretariat shall provide a summary of any available information from bilateral or multilateral meetings between the United States and other nations to the Committee members.

The records for the Committee and any working group will be handled in accordance with NOAA Administrative Order 205–1 governing the NOAA Records Management Program. Such records will be available for public inspection and copying, to the extent required by 5 U.S.C. 552. The Executive Secretariat shall ensure that all records and other written materials are maintained and available for inspection to the extent required by law.

Authority: 16 U.S.C. 951 *et seq.*

Dated: November 8, 2016.

Jennifer M. Wallace,

Acting Director, Office of Sustainable Fisheries, National Marine Fisheries Service.

[FR Doc. 2016–27294 Filed 11–10–16; 8:45 am]

BILLING CODE 3510–22–P

DEPARTMENT OF COMMERCE

National Oceanic and Atmospheric Administration

RIN 0648–XE984

Fisheries of the South Atlantic; Southeast Data, Assessment, and Review (SEDAR); Public Meeting

AGENCY: National Marine Fisheries Service (NMFS), National Oceanic and Atmospheric Administration (NOAA), Commerce.

ACTION: Notice of SEDAR 50 Pre-Data Workshop Webinar.

SUMMARY: The SEDAR 50 assessment of the Atlantic and Gulf of Mexico stock of Blueline Tilefish will consist of a series of workshops and webinars: Stock Identification (ID) Work Group Meeting; Data Workshop; Assessment Workshop and Webinars; and a Review Workshop. See **SUPPLEMENTARY INFORMATION**.

DATES: The SEDAR 50 Pre-Data Workshop Webinar will be held on Tuesday, December 13, 2016, from 1 p.m. to 4 p.m.

ADDRESSES:

Meeting address: The meetings will be held via webinar. The webinar is open to members of the public. Those interested in participating should contact Julia Byrd at SEDAR (see **FOR FURTHER INFORMATION CONTACT** below) to request an invitation providing webinar access information. Please request webinar invitations at least 24 hours in advance of each webinar.

SEDAR address: South Atlantic Fishery Management Council, 4055 Faber Place Drive, Suite 201, N. Charleston, SC 29405; *www.sedarweb.org.*

FOR FURTHER INFORMATION CONTACT: Julia Byrd, SEDAR Coordinator, 4055 Faber Place Drive, Suite 201, North Charleston, SC 29405; phone: (843) 571–4366; email*: julia.byrd@safmc.net.*

SUPPLEMENTARY INFORMATION: The Gulf of Mexico, South Atlantic, and Caribbean Fishery Management Councils, in conjunction with NOAA Fisheries and the Atlantic and Gulf States Marine Fisheries Commissions, have implemented the Southeast Data, Assessment and Review (SEDAR) process, a multi-step method for determining the status of fish stocks in the Southeast Region. SEDAR is a three-step process including: (1) Data Workshop; (2) Assessment Process utilizing webinars; and (3) Review Workshop. The product of the Data Workshop is a data report which compiles and evaluates potential datasets and recommends which datasets are appropriate for assessment analyses. The product of the Assessment Process is a stock assessment report which describes the fisheries, evaluates the status of the stock, estimates biological benchmarks, projects future population conditions, and recommends research and monitoring needs. The assessment is independently peer reviewed at the Review Workshop. The product of the Review Workshop is a Summary documenting panel opinions regarding the strengths and weaknesses of the stock assessment and input data. Participants for SEDAR Workshops are appointed by the Gulf of Mexico, South Atlantic, and Caribbean Fishery Management Councils and NOAA Fisheries Southeast Regional Office, Highly Migratory Species Management Division, and Southeast Fisheries Science Center. Participants include: data collectors and database managers; stock assessment scientists, biologists, and researchers; constituency representatives including fishermen, environmentalists, and non-governmental organizations (NGOs); international experts; and staff of Councils, Commissions, and state and federal agencies.

The items of discussion at the SEDAR 50 Pre-Data Workshop webinar are as follows: Participants will continue to discuss data needs and treatments in order to prepare for the Data Workshop.

Although non-emergency issues not contained in this agenda may come before this group for discussion, those issues may not be the subject of formal action during this meeting. Action will be restricted to those issues specifically identified in this notice and any issues

arising after publication of this notice that require emergency action under section 305(c) of the Magnuson-Stevens Fishery Conservation and Management Act, provided the public has been notified of the intent to take final action to address the emergency.

Special Accommodations

This meeting is accessible to people with disabilities. Requests for auxiliary aids should be directed to the SAFMC office (see **ADDRESSES**) at least 10 business days prior to the meeting.

Note: The times and sequence specified in this agenda are subject to change.

Authority: 16 U.S.C. 1801 *et seq.*

Dated: November 8, 2016.

Tracey L. Thompson,

Acting Deputy Director, Office of Sustainable Fisheries, National Marine Fisheries Service.

[FR Doc. 2016–27300 Filed 11–10–16; 8:45 am]

BILLING CODE 3510–22–P

DEPARTMENT OF COMMERCE

Patent and Trademark Office

[Docket No. PTO–P–2016–0041]

Notice of Roundtables and Request for Comments Related to Patent Subject Matter Eligibility; Addition of USPTO HQ Location for Roundtable 2

AGENCY: United States Patent and Trademark Office, Department of Commerce.

ACTION: Notice of public roundtables and request for comments related to patent subject matter eligibility.

SUMMARY: The United States Patent and Trademark Office publishes this notice to announce that interested persons may participate at the USPTO's Alexandria, VA office for its Roundtable to be held on December 5, 2016.

DATES: This notice is applicable to Roundtable 2 being held December 5, 2016, 8 a.m. to 5 p.m., PST Stanford, CA. Written comments are due by January 18, 2017.

FOR FURTHER INFORMATION CONTACT: Requests for additional information regarding registration and speaker presentations should be directed to the attention of Elizabeth Shaw, by telephone at 571–272–9300, or by email at *Elizabeth.shaw2@uspto.gov.*

SUPPLEMENTARY INFORMATION: On October, 17, 2016, the USPTO published in the **Federal Register** a notice of public roundtables and request for comments related to patent subject matter eligibility. (81 FR 71485). The USPTO publishes this notice to announce that in addition to those USPTO offices identified in the October 17, 2016 notice, the public is also invited to participate at Roundtable 2 by appearing, in person, at the USPTO Headquarters, 600 Dulany Street, Alexandria, Virginia 22314. Please see the October 17, 2016 notice for registration instructions and further information on the Roundtables.

Dated: November 7 2016.

Michelle K. Lee,

Under Secretary of Commerce for Intellectual Property and Director of the United States Patent and Trademark Office.

[FR Doc. 2016–27279 Filed 11–10–16; 8:45 am]

BILLING CODE 3510–16–P

COMMODITY FUTURES TRADING COMMISSION

Sunshine Act Meetings

TIME AND DATE: 10:00 a.m., Friday, November 18, 2016.

PLACE: Three Lafayette Centre, 1155 21st Street NW., Washington, DC, 9th Floor Commission Conference Room.

STATUS: Closed.

MATTERS TO BE CONSIDERED: Surveillance, enforcement, and examinations matters. In the event that the time, date, or location of this meeting changes, an announcement of the change, along with the new time, date, and/or place of the meeting will be posted on the Commission's Web site at *http://www.cftc.gov.*

CONTACT PERSON FOR MORE INFORMATION: Christopher Kirkpatrick, 202–418–5964.

Natise Allen,

Executive Assistant.

[FR Doc. 2016–27430 Filed 11–9–16; 4:15 pm]

BILLING CODE 6351–01–P

DEPARTMENT OF DEFENSE

Office of the Secretary

[Docket ID DOD–2016–OS–0111]

Privacy Act of 1974; System of Records

AGENCY: Defense Threat Reduction Agency/USSTRATCOM Center for Combating Weapons of Mass Destruction (DTRA/SCC–WMD), DoD.

ACTION: Notice to alter a system of records.

SUMMARY: Pursuant to the Privacy Act of 1974, and Office of Management and Budget (OMB) Circular No. A–130, notice is hereby given that the DTRA/SCC–WMD proposes to alter a system of records, HDTRA 028, entitled ''AtHoc Emergency Mass-Notification System,'' last published at 81 FR 9174, February 24, 2016. This system of records exists to notify the workforce quickly with information in times of emergency (snow, fire, hurricane, or other unforeseen situations that cause the Fort Belvoir/McNamara Complex to be closed). This alteration incorporates the applicable DoD Routine Uses in the notice to provide clarity for the public. The authorities were also updated to remove extraneous references. Lastly, the system name was updated to provide a title that defines its use and purpose.

DATES: Comments will be accepted on or before December 14, 2016. This proposed action will be effective the date following the end of the comment period unless comments are received which result in a contrary determination.

ADDRESSES: You may submit comments, identified by docket number and title, by any of the following methods:

* *Federal Rulemaking Portal: http://www.regulations.gov.* Follow the instructions for submitting comments.

* *Mail:* Department of Defense, Office of the Deputy Chief Management Officer, Directorate of Oversight and Compliance, 4800 Mark Center Drive, Mailbox #24, Alexandria, VA 22350–1700.

Instructions: All submissions received must include the agency name and docket number for this **Federal Register** document. The general policy for comments and other submissions from members of the public is to make these submissions available for public viewing on the Internet at *http://www.regulations.gov* as they are received without change, including any personal identifiers or contact information.

FOR FURTHER INFORMATION CONTACT: Pamela Andrews, Senior Analyst Freedom of Information/Privacy Act Office, 8725 John J. Kingman Road, Fort Belvoir, VA, 22060, 703–767–1792.

SUPPLEMENTARY INFORMATION: The DTRA/SCC–WMD's notices for systems of records subject to the Privacy Act of 1974 (5 U.S.C. 552a), as amended, have been published in the **Federal Register** and are available from the address in the **FOR FURTHER INFORMATION CONTACT** or from the Defense Privacy, Civil Liberties, and Transparency Division Web site at *http://dpcld.defense.gov/.*

The proposed systems reports, as required by 5 U.S.C. 552a(r) of the Privacy Act, as amended, were submitted on October 19, 2016, to the

House Committee on Oversight and Government Reform, the Senate Committee on Homeland Security and Governmental Affairs, and the Office of Management and Budget (OMB) pursuant to paragraph 4 of Appendix I to OMB Circular No. A–130, ''Federal Agency Responsibilities for Maintaining Records About Individuals,'' revised November 28, 2000 (December 12, 2000 65 FR 77677).

Dated: November 8, 2016.

Aaron Siegel,

Alternate OSD Federal Register Liaison Officer, Department of Defense.

HDTRA 028

SYSTEM NAME:

AtHoc Emergency Mass-Notification System (February 24, 2016, 81 FR 9174)

CHANGES:

* * * * *

SYSTEM NAME:

Delete entry and replace with ''DTRA Mass Notification System.''

* * * * *

AUTHORITY FOR MAINTENANCE OF THE SYSTEM:

Delete entry and replace with ''10 U.S.C. 136, Under Secretary of Defense for Personnel and Readiness; DoD Directive 5124.02, Under Secretary of Defense for Personnel and Readiness (USD (P&R); DoD Instruction (DoDI) 3020.42, Defense Continuity Plan Development; DoDI 3020.52, DoD Installation Chemical, Biological, Radiological, Nuclear, and High-Yield Explosive (CBRNE) Preparedness Standards; and DoDI 6055.17, DoD Installation Emergency Management (IEM) Program.''

* * * * *

ROUTINE USES OF RECORDS MAINTAINED IN THE SYSTEM, INCLUDING CATEGORIES OF USERS AND THE PURPOSES OF SUCH USES:

Delete entry and replace with ''In addition to those disclosures generally permitted under 5 U.S.C. 552a(b) of the Privacy Act of 1974, as amended, the records contained herein may be disclosed outside the DoD as a routine use pursuant to 5 U.S.C. 552a(b)(3) as follows:

Law Enforcement Routine Use: If a system of records maintained by a DoD Component to carry out its functions indicates a violation or potential violation of law, whether civil, criminal, or regulatory in nature, and whether arising by general statute or by regulation, rule, or order issued pursuant thereto, the relevant records in the system of records may be referred, as a routine use, to the agency concerned, whether federal, state, local, or foreign, charged with the responsibility of investigating or prosecuting such violation or charged with enforcing or implementing the statute, rule, regulation, or order issued pursuant thereto.

Congressional Inquiries Disclosure Routine Use: Disclosure from a system of records maintained by a DoD Component may be made to a congressional office from the record of an individual in response to an inquiry from the congressional office made at the request of that individual.

Disclosure to the Department of Justice for Litigation Routine Use: A record from a system of records maintained by a DoD Component may be disclosed as a routine use to any component of the Department of Justice for the purpose of representing the Department of Defense, or any officer, employee or member of the Department in pending or potential litigation to which the record is pertinent.

Disclosure of Information to the National Archives and Records Administration Routine Use: A record from a system of records maintained by a DoD Component may be disclosed as a routine use to the National Archives and Records Administration for the purpose of records management inspections conducted under authority of 44 U.S.C. 2904 and 2906.

Data Breach Remediation Purposes Routine Use: A record from a system of records maintained by a Component may be disclosed to appropriate agencies, entities, and persons when (1) The Component suspects or has confirmed that the security or confidentiality of the information in the system of records has been compromised; (2) the Component has determined that as a result of the suspected or confirmed compromise there is a risk of harm to economic or property interests, identity theft or fraud, or harm to the security or integrity of this system or other systems or programs (whether maintained by the Component or another agency or entity) that rely upon the compromised information; and (3) the disclosure made to such agencies, entities, and persons is reasonably necessary to assist in connection with the Components efforts to respond to the suspected or confirmed compromise and prevent, minimize, or remedy such harm.''

* * * * *

[FR Doc. 2016–27302 Filed 11–10–16; 8:45 am]

BILLING CODE 5001–06–P

DEPARTMENT OF EDUCATION

[Docket No. ED–2016–ICCD–0124]

Agency Information Collection Activities; Submission to the Office of Management and Budget for Review and Approval; Comment Request; Application for Grants Under the Upward Bound Math and Science Program

AGENCY: Office of Postsecondary Education (OPE), Department of Education (ED).

ACTION: Notice.

SUMMARY: In accordance with the Paperwork Reduction Act of 1995 (44 U.S.C. chapter 3501 *et seq.*), ED is proposing a reinstatement of a previously approved information collection.

DATES: Interested persons are invited to submit comments on or before December 14, 2016.

ADDRESSES: To access and review all the documents related to the information collection listed in this notice, please use *http://www.regulations.gov* by searching the Docket ID number ED–2016–ICCD–0124. Comments submitted in response to this notice should be submitted electronically through the Federal eRulemaking Portal at *http://www.regulations.gov* by selecting the Docket ID number or via postal mail, commercial delivery, or hand delivery. *Please note that comments submitted by fax or email and those submitted after the comment period will not be accepted.* Written requests for information or comments submitted by postal mail or delivery should be addressed to the Director of the Information Collection Clearance Division, U.S. Department of Education, 400 Maryland Avenue SW., LBJ, Room 2E–347, Washington, DC 20202–4537.

FOR FURTHER INFORMATION CONTACT: For specific questions related to collection activities, please contact Sharon Easterling, 202–453–7425.

SUPPLEMENTARY INFORMATION: The Department of Education (ED), in accordance with the Paperwork Reduction Act of 1995 (PRA) (44 U.S.C. 3506(c)(2)(A)), provides the general public and Federal agencies with an opportunity to comment on proposed, revised, and continuing collections of information. This helps the Department assess the impact of its information collection requirements and minimize the public's reporting burden. It also helps the public understand the Department's information collection requirements and provide the requested data in the desired format. ED is

soliciting comments on the proposed information collection request (ICR) that is described below. The Department of Education is especially interested in public comment addressing the following issues: (1) Is this collection necessary to the proper functions of the Department; (2) will this information be processed and used in a timely manner; (3) is the estimate of burden accurate; (4) how might the Department enhance the quality, utility, and clarity of the information to be collected; and (5) how might the Department minimize the burden of this collection on the respondents, including through the use of information technology. Please note that written comments received in response to this notice will be considered public records.

Title of Collection: Application for Grants under the Upward Bound Math and Science Program.

OMB Control Number: 1840–0824.

Type of Review: A reinstatement of a previously approved information collection.

Respondents/Affected Public: State, Local, and Tribal Governments; Private Sector.

Total Estimated Number of Annual Responses: 475.

Total Estimated Number of Annual Burden Hours: 15,830.

Abstract: The purpose of the Upward Bound Math and Science (UBMS) Program is to generate in program participants the skills and motivation necessary to complete a program of secondary education and to enter and succeed in a program of postsecondary education that lead to careers in the fields of math and science.

Authority for this program is contained in Title IV, Part A, Subpart 2, Chapter 1, Section 402C of the Higher Education Act of 1965, as amended by the Higher Education Opportunity Act of 2008. Eligible applicants include institutions of higher education, public or private agencies or organizations, including community-based organizations with experience in serving disadvantaged youth, secondary schools, and combinations of institutions, agencies, organizations, and secondary schools.

The Department is requesting a reinstatement, with change, of the application for grants under the UBMS Program. The Department is requesting a reinstatement with change because the previous UBMS application was discontinued in October 2014 and the application will be needed for a Fiscal Year (FY) 2017 competition for new awards. The FY 2017 application incorporates a competitive preference priority and an invitational priority and removes previously-used competitive preference priorities. The changes do not affect burden hours.

Dated: November 8, 2016.

Kate Mullan,

Acting Director, Information Collection Clearance Division, Office of the Chief Privacy Officer, Office of Management.

[FR Doc. 2016–27284 Filed 11–10–16; 8:45 am]

BILLING CODE 4000–01–P

DEPARTMENT OF EDUCATION

[Docket No. ED–2016–ICCD–0096]

Agency Information Collection Activities; Submission to the Office of Management and Budget for Review and Approval; Comment Request; Student Assistance General Provisions—Subpart K—Cash Management

AGENCY: Federal Student Aid (FSA), Department of Education (ED).

ACTION: Notice.

SUMMARY: In accordance with the Paperwork Reduction Act of 1995 (44 U.S.C. chapter 3501 *et seq.*), ED is proposing a revision of an existing information collection.

DATES: Interested persons are invited to submit comments on or before December 14, 2016.

ADDRESSES: To access and review all the documents related to the information collection listed in this notice, please use *http://www.regulations.gov* by searching the Docket ID number ED–2016–ICCD–0096. Comments submitted in response to this notice should be submitted electronically through the Federal eRulemaking Portal at *http://www.regulations.gov* by selecting the Docket ID number or via postal mail, commercial delivery, or hand delivery. *Please note that comments submitted by fax or email and those submitted after the comment period will not be accepted.* Written requests for information or comments submitted by postal mail or delivery should be addressed to the Director of the Information Collection Clearance Division, U.S. Department of Education, 400 Maryland Avenue SW., LBJ, Room 2E–347, Washington, DC 20202–4537.

FOR FURTHER INFORMATION CONTACT: For specific questions related to collection activities, please contact Beth Grebeldinger, 202–377–4018.

SUPPLEMENTARY INFORMATION: The Department of Education (ED), in accordance with the Paperwork Reduction Act of 1995 (PRA) (44 U.S.C. 3506(c)(2)(A)), provides the general public and Federal agencies with an opportunity to comment on proposed, revised, and continuing collections of information. This helps the Department assess the impact of its information collection requirements and minimize the public's reporting burden. It also helps the public understand the Department's information collection requirements and provide the requested data in the desired format. ED is soliciting comments on the proposed information collection request (ICR) that is described below. The Department of Education is especially interested in public comment addressing the following issues: (1) Is this collection necessary to the proper functions of the Department; (2) will this information be processed and used in a timely manner; (3) is the estimate of burden accurate; (4) how might the Department enhance the quality, utility, and clarity of the information to be collected; and (5) how might the Department minimize the burden of this collection on the respondents, including through the use of information technology. Please note that written comments received in response to this notice will be considered public records.

Title of Collection: Student Assistance General Provisions—Subpart K—Cash Management.

OMB Control Number: 1845–0038.

Type of Review: A revision of an existing information collection.

Respondents/Affected Public: State, Local, and Tribal Governments; Individuals or Households; Private Sector.

Total Estimated Number of Annual Responses: 26,266,031.

Total Estimated Number of Annual Burden Hours: 1,194,318.

Abstract: This request is for a revision to the current information collection 1845–0038 that is expiring. This collection pertains to the recordkeeping requirements contained in the regulations related to the administration of the Subpart K—Cash Management section of the Student Assistance General Provisions. The regulatory language has not changed. These program regulations are designed to provide benefits to Title IV, HEA applicants, and protect the taxpayers' interest. The information collection requirements in these regulations are necessary to provide students with required information about their eligibility to receive funding under the federal student financial aid programs and to prevent fraud and abuse of program funds by allowing students to reduce or reject aid being offered as well as being made aware of when such funding can be expected to be available.

Dated: November 8, 2016.

Kate Mullan,

Acting Director, Information Collection Clearance Division, Office of the Chief Privacy Officer, Office of Management.

[FR Doc. 2016–27282 Filed 11–10–16; 8:45 am]

BILLING CODE 4000–01–P

DEPARTMENT OF EDUCATION

[Docket No.: ED–2016–ICCD–0098]

Agency Information Collection Activities; Submission to the Office of Management and Budget for Review and Approval; Comment Request; William D. Ford Federal Direct Loan Program Repayment Plan Selection Form

AGENCY: Federal Student Aid (FSA), Department of Education (ED).

ACTION: Notice.

SUMMARY: In accordance with the Paperwork Reduction Act of 1995 (44 U.S.C. chapter 3501 *et seq.*), ED is proposing an extension of an existing information collection.

DATES: Interested persons are invited to submit comments on or before December 14, 2016.

ADDRESSES: To access and review all the documents related to the information collection listed in this notice, please use *http://www.regulations.gov* by searching the Docket ID number ED–2016–ICCD–0098. Comments submitted in response to this notice should be submitted electronically through the Federal eRulemaking Portal at *http://www.regulations.gov* by selecting the Docket ID number or via postal mail, commercial delivery, or hand delivery. *Please note that comments submitted by fax or email and those submitted after the comment period will not be accepted.* Written requests for information or comments submitted by postal mail or delivery should be addressed to the Director of the Information Collection Clearance Division, U.S. Department of Education, 400 Maryland Avenue SW., LBJ, Room 2E–347, Washington, DC 20202–4537.

FOR FURTHER INFORMATION CONTACT: For specific questions related to collection activities, please contact Beth Grebeldinger, 202–377–4018.

SUPPLEMENTARY INFORMATION: The Department of Education (ED), in accordance with the Paperwork Reduction Act of 1995 (PRA) (44 U.S.C. 3506(c)(2)(A)), provides the general public and Federal agencies with an opportunity to comment on proposed, revised, and continuing collections of information. This helps the Department assess the impact of its information collection requirements and minimize the public's reporting burden. It also helps the public understand the Department's information collection requirements and provide the requested data in the desired format. ED is soliciting comments on the proposed information collection request (ICR) that is described below. The Department of Education is especially interested in public comment addressing the following issues: (1) Is this collection necessary to the proper functions of the Department; (2) will this information be processed and used in a timely manner; (3) is the estimate of burden accurate; (4) how might the Department enhance the quality, utility, and clarity of the information to be collected; and (5) how might the Department minimize the burden of this collection on the respondents, including through the use of information technology. Please note that written comments received in response to this notice will be considered public records.

Title of Collection: William D. Ford Federal Direct Loan Program Repayment Plan Selection Form.

OMB Control Number: 1845–0014.

Type of Review: An extension of an existing information collection.

Respondents/Affected Public: Individuals or Households.

Total Estimated Number of Annual Responses: 660,000.

Total Estimated Number of Annual Burden Hours: 110,220.

Abstract: The Repayment Plan Request form serves as the means by which Direct Loan borrowers notify the Department of their choice of an initial repayment plan under the Standard, Extended or Graduated options before their loans enter repayment. The form may also be used by borrowers to request a change in the Standard, Extended or Graduated repayment plans options after their loans have entered repayment. If a borrower does not select an initial repayment plan, the borrower is placed on the Standard Repayment Plan in accordance with 34 CFR 685.210(a)(2).

Dated: November 8, 2016.

Kate Mullan,

Acting Director, Information Collection Clearance Division, Office of the Chief Privacy Officer, Office of Management.

[FR Doc. 2016–27283 Filed 11–10–16; 8:45 am]

BILLING CODE 4000–01–P

DEPARTMENT OF ENERGY

Federal Energy Regulatory Commission

Combined Notice of Filings #2

Take notice that the Commission received the following electric corporate filings:

Docket Numbers: EC17–28–000.
Applicants: Innovative Solar 43, LLC, Innovative Owner 43, LLC.
Description: Application for Authorization Under Section 203 of the Federal Power Act, et al. Innovative Solar 43, LLC, et al.
Filed Date: 11/7/16.
Accession Number: 20161107–5197.
Comments Due: 5 p.m. ET 11/28/16.

Take notice that the Commission received the following electric rate filings:

Docket Numbers: ER16–1827–000.
Applicants: GenOn Energy Management, LLC.
Description: Report Filing: Refund Report, Informational Filing to be effective N/A.
Filed Date: 11/7/16.
Accession Number: 20161107–5098.
Comments Due: 5 p.m. ET 11/28/16.

Docket Numbers: ER16–1955–001.
Applicants: Antelope DSR 2, LLC.
Description: Compliance filing: Antelope DSR 2, LLC MBR Tariff to be effective 6/18/2016.
Filed Date: 11/7/16.
Accession Number: 20161107–5106.
Comments Due: 5 p.m. ET 11/28/16.

Docket Numbers: ER16–2194–001.
Applicants: Clinton Battery Utility, LLC.
Description: Compliance filing: Clinton Battery Utility Revised Tariff to be effective 11/8/2016.
Filed Date: 11/7/16.
Accession Number: 20161107–5143.
Comments Due: 5 p.m. ET 11/28/16.

Docket Numbers: ER16–2363–001.
Applicants: Bluestem Wind Energy, LLC.
Description: Compliance filing: Bluestem Wind Energy MBR Tariff Update to be effective 11/8/2016.
Filed Date: 11/7/16.
Accession Number: 20161107–5140.
Comments Due: 5 p.m. ET 11/28/16.

Docket Numbers: ER16–2602–001.
Applicants: 4C Acquisition, LLC.
Description: Tariff Amendment: Supplement to Application for Market-Based Rate Authorization of 4C Acquisition to be effective 11/17/2016.
Filed Date: 11/2/16.
Accession Number: 20161102–5142.
Comments Due: 5 p.m. ET 11/14/16.

Docket Numbers: ER16–2708–001.

Applicants: Exelon West Medway II, LLC.
Description: Compliance filing: Exelon West Medway II LLC Revised Tariff to be effective 11/8/2016.
Filed Date: 11/7/16.
Accession Number: 20161107–5139.
Comments Due: 5 p.m. ET 11/28/16.

Docket Numbers: ER17–3–001.
Applicants: ESS Lewes Project, LLC.
Description: Tariff Amendment: Amendment to 1 to be effective 12/2/2016.
Filed Date: 11/7/16.
Accession Number: 20161107–5208.
Comments Due: 5 p.m. ET 11/28/16.

Docket Numbers: ER17–94–001.
Applicants: ESS Snook Project, LLC.
Description: Tariff Amendment: Amendment to 1 to be effective 12/13/2016.
Filed Date: 11/7/16.
Accession Number: 20161107–5205.
Comments Due: 5 p.m. ET 11/28/16.

Docket Numbers: ER17–313–000.
Applicants: AEP Texas Central Company.
Description: § 205(d) Rate Filing: TCC-Patriot Wind Farm Second Amend & Restated IA to be effective 10/13/2016.
Filed Date: 11/7/16.
Accession Number: 20161107–5149.
Comments Due: 5 p.m. ET 11/28/16.

Docket Numbers: ER17–314–000.
Applicants: PJM Interconnection, L.L.C.
Description: § 205(d) Rate Filing: Amendment to ISA SA No. 3333; Queue No. W3–003 to be effective 6/24/2014.
Filed Date: 11/7/16.
Accession Number: 20161107–5154.
Comments Due: 5 p.m. ET 11/28/16.

Take notice that the Commission received the following PURPA 210(m)(3) filings:

Docket Numbers: QM17–2–000.
Applicants: East Kentucky Power Cooperative, Inc.
Description: Application of East Kentucky Power Cooperative, Inc. for the termination of the obligation to purchase power from qualifying facilities.
Filed Date: 11/4/16.
Accession Number: 20161104–5214.
Comments Due: 5 p.m. ET 12/2/16.

Take notice that the Commission received the following electric reliability filings

Docket Numbers: RD16–6–001.
Applicants: North American Electric Reliability Corporation.
Description: Revisions of the North American Electric Reliability Corporation to the Violations Risk Factors for Reliability Standards IRO–018–1 and TOP–010–1.
Filed Date: 11/7/16.
Accession Number: 20161107–5195.
Comments Due: 5 p.m. ET 12/7/16.

The filings are accessible in the Commission's eLibrary system by clicking on the links or querying the docket number.

Any person desiring to intervene or protest in any of the above proceedings must file in accordance with Rules 211 and 214 of the Commission's Regulations (18 CFR 385.211 and 385.214) on or before 5:00 p.m. Eastern time on the specified comment date. Protests may be considered, but intervention is necessary to become a party to the proceeding.

eFiling is encouraged. More detailed information relating to filing requirements, interventions, protests, service, and qualifying facilities filings can be found at: *http://www.ferc.gov/docs-filing/efiling/filing-req.pdf.* For other information, call (866) 208–3676 (toll free). For TTY, call (202) 502–8659.

Dated: November 7, 2016.

Nathaniel J. Davis, Sr.,

Deputy Secretary.

[FR Doc. 2016–27290 Filed 11–10–16; 8:45 am]

BILLING CODE 6717–01–P

DEPARTMENT OF ENERGY

Federal Energy Regulatory Commission

Notice of Petition for Enforcement

	Docket Nos.
Otter Creek Solar LLC ..... Allco Finance Limited PLH LLC.	EL17–16–000
Otter Creek Solar LLC	QF13–402–006
Otter Creek Solar LLC	QF16–353–001
Otter Creek Solar LLC	QF16–354–001
Otter Creek Solar LLC	QF16–355–001
Otter Creek Solar LLC	QF16–356–001

Take notice that on November 4, 2016, pursuant to section 210(h)(2)(B) of the Public Utility Regulatory Policies Act of 1978 (PURPA), Otter Creek Solar LLC, Allco Finance Limited, and PLH LLC (Petitioners) filed a Petition for Enforcement, requesting the Federal Energy Regulatory Commission (Commission) to exercise its authority and initiate enforcement action against the Vermont Public Service Board to remedy their alleged improper implementation of PURPA, all as more fully explained in the petition.

Any person desiring to intervene or to protest this filing must file in accordance with Rules 211 and 214 of the Commission's Rules of Practice and Procedure (18 CFR 385.211, 385.214). Protests will be considered by the Commission in determining the appropriate action to be taken, but will not serve to make protestants parties to the proceeding. Any person wishing to become a party must file a notice of intervention or motion to intervene, as appropriate. Such notices, motions, or protests must be filed on or before the comment date. On or before the comment date, it is not necessary to serve motions to intervene or protests on persons other than the Petitioners.

The Commission encourages electronic submission of protests and interventions in lieu of paper using the ''eFiling'' link at *http://www.ferc.gov.* Persons unable to file electronically should submit an original and 5 copies of the protest or intervention to the Federal Energy Regulatory Commission, 888 First Street NE., Washington, DC 20426.

This filing is accessible on-line at *http://www.ferc.gov,* using the ''eLibrary'' link and is available for review in the Commission's Public Reference Room in Washington, DC. There is an ''eSubscription'' link on the Web site that enables subscribers to receive email notification when a document is added to a subscribed docket(s). For assistance with any FERC Online service, please email *FERCOnlineSupport@ferc.gov,* or call (866) 208–3676 (toll free). For TTY, call (202) 502–8659.

Comment Date: 5:00 p.m. Eastern Time on November 25, 2016.

Dated: November 7, 2016.

Nathaniel J. Davis, Sr.,

Deputy Secretary.

[FR Doc. 2016–27291 Filed 11–10–16; 8:45 am]

BILLING CODE 6717–01–P

DEPARTMENT OF ENERGY

Federal Energy Regulatory Commission

[Docket No. EL17–14–000]

East Texas Electric Cooperative, Inc.; Notice of Filing

Take notice that on October 31, 2016, East Texas Electric Cooperative, Inc. filed an application for cost-based revenue requirements schedule for reactive power production capability.

Any person desiring to intervene or to protest this filing must file in accordance with Rules 211 and 214 of the Commission's Rules of Practice and Procedure (18 CFR 385.211, 385.214). Protests will be considered by the Commission in determining the appropriate action to be taken, but will

not serve to make protestants parties to the proceeding. Any person wishing to become a party must file a notice of intervention or motion to intervene, as appropriate. Such notices, motions, or protests must be filed on or before the comment date. On or before the comment date, it is not necessary to serve motions to intervene or protests on persons other than the Applicant.

The Commission encourages electronic submission of protests and interventions in lieu of paper using the ''eFiling'' link at *http://www.ferc.gov.* Persons unable to file electronically should submit an original and 5 copies of the protest or intervention to the Federal Energy Regulatory Commission, 888 First Street NE., Washington, DC 20426.

This filing is accessible on-line at *http://www.ferc.gov,* using the ''eLibrary'' link and is available for electronic review in the Commission's Public Reference Room in Washington, DC There is an ''eSubscription'' link on the Web site that enables subscribers to receive email notification when a document is added to a subscribed docket(s). For assistance with any FERC Online service, please email *FERCOnlineSupport@ferc.gov,* or call (866) 208–3676 (toll free). For TTY, call (202) 502–8659.

Comment Date: 5:00 p.m. Eastern Time on November 21, 2016.

Dated: November 4, 2016.

Nathaniel J. Davis, Sr.,

Deputy Secretary.

[FR Doc. 2016–27255 Filed 11–10–16; 8:45 am]

BILLING CODE 6717–01–P

DEPARTMENT OF ENERGY

Federal Energy Regulatory Commission

[Project No. 12635–002]

Moriah Hydro Corporation; Notice of Scoping Meetings and Environmental Site Review and Soliciting Scoping Comments

Take notice that the following hydroelectric application has been filed with the Commission and is available for public inspection:

a. *Type of Application:* Original Major License.

b. *Project No.:* P–12635–002.

c. *Date filed:* February 13, 2015.

d. *Applicant:* Moriah Hydro Corporation.

e. *Name of Project:* Mineville Energy Storage Project.

f. *Location:* The project would be located in an abandoned subterranean mine complex [1] in the town of Moriah, Essex County, New York. No federal lands are occupied by project works or located within the project boundary.

g. *Filed Pursuant to:* Federal Power Act, 16 U.S.C. 791(a)–825(r).

h. *Applicant Contact:* James A. Besha, President, Moriah Hydro Corporation, c/o Albany Engineering Corporation, 5 Washington Square, Albany, New York 12205, (518) 456–7712.

i. *FERC Contact:* Chris Millard (202) 502–8256 or *christopher.millard@ferc.gov.*

j. *Deadline for filing scoping comments:* January 7, 2016.

The Commission strongly encourages electronic filing. Please file scoping comments using the Commission's eFiling system at *http://www.ferc.gov/docs-filing/efiling.asp.* Commenters can submit brief comments up to 6,000 characters, without prior registration, using the eComment system at *http://www.ferc.gov/docs-filing/ecomment.asp.* You must include your name and contact information at the end of your comments. For assistance, please contact FERC Online Support at *FERCOnlineSupport@ferc.gov,* (866) 208–3676 (toll free), or (202) 502–8659 (TTY). In lieu of electronic filing, please send a paper copy to: Secretary, Federal Energy Regulatory Commission, 888 First Street NE., Washington, DC 20426. The first page of any filing should include docket number P–12635–002.

The Commission's Rules of Practice and Procedures require all intervenors filing documents with the Commission to serve a copy of that document on each person on the official service list for the project. Further, if an intervenor files comments or documents with the Commission relating to the merits of an issue that may affect the responsibilities of a particular resource agency, they must also serve a copy of the document on that resource agency.

k. This application has been accepted for filing, but is not ready for environmental analysis at this time.

l. The proposed project consists of: (1) An upper reservoir located within the upper portion of the mine between elevations 495 and 1,095 feet above mean seal level (msl), with a surface area of 4 acres and a storage capacity of 2,448 acre-feet; (2) a lower reservoir in the lower portion of the mine between elevations −1,075 and −1,555 feet msl, with a surface area of 5.1 acres and a storage capacity of 2,448 acre-feet; (3) a 14-foot-diameter and 2,955-foot-long upper reservoir shaft connecting the upper reservoir to the high-pressure penstock located below the powerhouse chamber floor; (4) a 14-foot-diameter and 2,955-foot-long lower reservoir shaft connecting the lower reservoir and the lower reservoir ventilation tunnel; (5) two 6-foot-diameter emergency evacuation shafts located between the powerhouse chamber and the electrical equipment chamber; (6) a 25-foot-diameter main shaft extending 2,955 feet from the surface down to the powerhouse chamber; (7) 15-foot-diameter high- and low-pressure steel penstocks embedded beneath the powerhouse chamber floor; (8) a 320-foot-long by 80-foot-wide powerhouse chamber, containing 100 reversible pump-turbine units, each with a nameplate generating capacity of 2.4 megawatts; (9) a 274-foot-long by 36-foot-wide underground electrical equipment chamber adjacent to the powerhouse chamber; (10) an inclined electrical tunnel connecting the electrical equipment chamber to a new 115-kilovolt (kV) substation constructed adjacent to an existing single circuit 115-kV transmission line located about one horizontal mile from the underground powerhouse chamber; and (11) appurtenant facilities. The project would operate as a closed-loop system to meet energy demands and grid control requirements. The project would have an average annual generation of 421 gigawatt-hours (GWh). The average pumping power used by the project would be 554 GWh.

m. A copy of the application is available for review at the Commission in the Public Reference Room or may be viewed on the Commission's Web site at *http://www.ferc.gov* using the ''eLibrary'' link. Enter the docket number excluding the last three digits in the docket number field to access the document. For assistance, contact FERC Online Support. A copy is also available for inspection and reproduction at the address in item h above.

Register online at *http://www.ferc.gov/docs-filing/esubscription.asp* to be notified via email of new filings and issuances related to this or other pending projects. For assistance, contact FERC Online Support.

n. Scoping Process

The Commission intends to prepare an Environmental Assessment (EA) on the project in accordance with the National Environmental Policy Act. The EA will consider both site-specific and cumulative environmental impacts and reasonable alternatives to the proposed action.

[1] The existing mine complex is composed of the interconnected Old Bed, Bonanza open pit, and Harmony mines.

Scoping Meetings

FERC staff will conduct one agency scoping meeting and one public meeting. The agency scoping meeting will focus on resource agency and non-governmental organization (NGO) concerns, while the public scoping meeting is primarily for public input. All interested individuals, organizations, and agencies are invited to attend one or both of the meetings, and to assist the staff in identifying the scope of the environmental issues that should be analyzed in the EA. The times and locations of these meetings are as follows:

Agency Scoping Meeting

Date: Wednesday, December 7, 2016
Time: 10:00 a.m.
Place: New York State Department of Environmental Conservation, Region 5 Sub-Office, Conference Room A
Address: 232 Golf Course Road, Warrensburg, New York 12885

Public Scoping Meeting

Date: Thursday, December 8, 2016
Time: 7:00 p.m.
Place: Moriah Central School Auditorium
Address: Moriah Central School, 39 Viking Lane, Port Henry, New York 12974

Copies of the Scoping Document (SD1) outlining the subject areas to be addressed in the EA were distributed to the parties on the Commission's mailing list. Copies of the SD1 will be available at the scoping meeting or may be viewed on the web at *http://www.ferc.gov* using the ''eLibrary'' link (see item m above).

Environmental Site Review

The Applicant and FERC staff will conduct a project Environmental Site Review beginning at 2:00 p.m. on December 8, 2016. All interested individuals, organizations, and agencies are invited to attend. All participants should meet at the informal parking area of the Moriah Highway Department at 30 Joyce Rd, Mineville, New York. Anyone with questions about the Environmental Site Review should contact Wendy Carey, consultant for Moriah Hydro Corporation at (518) 456–7712.

Objectives

At the scoping meetings, the staff will: (1) Summarize the environmental issues tentatively identified for analysis in the EA; (2) solicit from the meeting participants all available information, especially quantifiable data, on the resources at issue; (3) encourage statements from experts and the public on issues that should be analyzed in the EA, including viewpoints in opposition to, or in support of, the staff's preliminary views; (4) determine the resource issues to be addressed in the EA; and (5) identify those issues that require a detailed analysis, as well as those issues that do not require a detailed analysis.

Procedures

The meetings will be recorded by a stenographer and become part of the formal record of the Commission proceeding on the project.

Individuals, organizations, and agencies with environmental expertise and concerns are encouraged to attend the meeting and to assist the staff in defining and clarifying the issues to be addressed in the EA.

Dated: November 4, 2016.

Nathaniel J. Davis, Sr.,

Deputy Secretary.

[FR Doc. 2016–27253 Filed 11–10–16; 8:45 am]

BILLING CODE 6717–01–P

DEPARTMENT OF ENERGY

Federal Energy Regulatory Commission

[Docket No. AD16–25–000]

Utilization in the Organized Markets of Electric Storage Resources as Transmission Assets Compensated Through Transmission Rates, for Grid Support Services Compensated in Other Ways, and for Multiple Services; Further Supplemental Notice of Technical Conference

As announced in the Notice of Technical Conference issued on September 30, 2016 and the Supplemental Notice of Technical Conference issued on November 1, 2016, the Federal Energy Regulatory Commission (Commission) staff will convene a technical conference on November 9, 2016, at the Commission's offices at 888 First Street NE., Washington, DC 20426 beginning at approximately 10:00 a.m. and ending at approximately 3:00 p.m. (Eastern Time). Commission staff will lead the conference, and Commissioners may attend.

The purpose of the technical conference is to discuss the utilization of electric storage resources as transmission assets compensated through transmission rates, for grid support services that are compensated in other ways, and for multiple services.

This technical conference will be transcribed and webcast. Transcripts of the technical conference will be available for a fee from Ace-Federal Reporters, Inc. at (202) 347–3700. A free webcast of this event will be available through *www.ferc.gov.* Anyone with internet access who wants to view this event can do so by navigating to the Calendar of Events at *www.ferc.gov* and locating this event in the Calendar. The event will contain a link to its webcast. The Capitol Connection provides technical support for webcasts and offers the option of listening to the workshop via phone-bridge for a fee. If you have any questions, visit *www.CapitolConnection.org* or call (703) 993–3100.

Those interested in attending the technical conference or viewing the webcast are encouraged to register at *https://www.ferc.gov/whats-new/registration/11-09-16-form.asp.*

Commission technical conferences are accessible under section 508 of the Rehabilitation Act of 1973. For accessibility accommodations, please send an email to *accessibility@ferc.gov,* call (866) 208–3372 (toll free) or (202) 208–8659 (TTY), or send a FAX to (202) 208–2106 with the required accommodations.

While this conference is not for the purpose of discussing specific cases, we note that the discussions at the conference may address matters at issue in the following Commission proceedings that are either pending or within their rehearing period:

	Docket Nos.
Electric Storage Participation in Regions with Organized Wholesale Electric Markets.	AD16–20.
ISO New England Inc.	ER17–68.
Indianapolis Power & Light Company v. Midcontinent Independent System Operator, Inc.	EL17–8.
New York Independent System Operator, Inc.	ER13–102.
New York Independent System Operator, Inc.	ER15–2059.
New York Independent System Operator, Inc.	ER16–120.
New York Independent System Operator, Inc.	ER16–1404.

For more information about this technical conference, please contact:

Rahim Amerkhail (Technical Information)
Office of Energy Policy and Innovation
Federal Energy Regulatory Commission
888 First Street NE.
Washington, DC 20426
(202) 502–8266
rahim.amerkhail@ferc.gov.

Sarah McKinley (Logistical Information)
Office of External Affairs

Federal Energy Regulatory Commission
888 First Street NE.
Washington, DC 20426
(202) 502–8004
sarah.mckinley@ferc.gov.

Heidi Nielsen (Legal Information)
Office of the General Counsel
Federal Energy Regulatory Commission
888 First Street NE.
Washington, DC 20426
(202) 502–8435
heidi.nielsen@ferc.gov.

Dated: November 7, 2016.

Nathaniel J. Davis, Sr.,

Deputy Secretary.

[FR Doc. 2016–27288 Filed 11–10–16; 8:45 am]

BILLING CODE 6717–01–P

DEPARTMENT OF ENERGY

Federal Energy Regulatory Commission

[Docket No. ER17–306–000]

Beacon Solar 3, LLC; Supplemental Notice That Initial Market-Based Rate Filing Includes Request for Blanket Section 204 Authorization

This is a supplemental notice in the above-referenced proceeding of Beacon Solar 3, LLC's application for market-based rate authority, with an accompanying rate tariff, noting that such application includes a request for blanket authorization, under 18 CFR part 34, of future issuances of securities and assumptions of liability.

Any person desiring to intervene or to protest should file with the Federal Energy Regulatory Commission, 888 First Street NE., Washington, DC 20426, in accordance with Rules 211 and 214 of the Commission's Rules of Practice and Procedure (18 CFR 385.211 and 385.214). Anyone filing a motion to intervene or protest must serve a copy of that document on the Applicant.

Notice is hereby given that the deadline for filing protests with regard to the applicant's request for blanket authorization, under 18 CFR part 34, of future issuances of securities and assumptions of liability, is November 25, 2016.

The Commission encourages electronic submission of protests and interventions in lieu of paper, using the FERC Online links at *http://www.ferc.gov.* To facilitate electronic service, persons with Internet access who will eFile a document and/or be listed as a contact for an intervenor must create and validate an eRegistration account using the eRegistration link. Select the eFiling link to log on and submit the intervention or protests.

Persons unable to file electronically should submit an original and 5 copies of the intervention or protest to the Federal Energy Regulatory Commission, 888 First Street NE., Washington, DC 20426.

The filings in the above-referenced proceeding are accessible in the Commission's eLibrary system by clicking on the appropriate link in the above list. They are also available for electronic review in the Commission's Public Reference Room in Washington, DC. There is an eSubscription link on the Web site that enables subscribers to receive email notification when a document is added to a subscribed docket(s). For assistance with any FERC Online service, please email *FERCOnlineSupport@ferc.gov* or call (866) 208–3676 (toll free). For TTY, call (202) 502–8659.

Dated: November 4, 2016.

Nathaniel J. Davis, Sr.,

Deputy Secretary.

[FR Doc. 2016–27256 Filed 11–10–16; 8:45 am]

BILLING CODE 6717–01–P

DEPARTMENT OF ENERGY

Federal Energy Regulatory Commission

Combined Notice of Filings #1

Take notice that the Commission received the following electric corporate filings:

Docket Numbers: EC17–26–000.
Applicants: Bethel Wind Farm LLC.
Description: Application for Authorization Under Section 203 of the Federal Power Act and Request for Waivers and Expedited Action of Bethel Wind Farm LLC.
Filed Date: 11/4/16.
Accession Number: 20161104–5175.
Comments Due: 5 p.m. ET 11/25/16.

Docket Numbers: EC17–27–000.
Applicants: Kumeyaay Wind LLC, Mendota Hills, LLC.
Description: Application for Authorization for Disposition of Jurisdictional Facilities and Request for Expedited Action of Kumeyaay Wind LLC, et al.
Filed Date: 11/4/16.
Accession Number: 20161104–5199.
Comments Due: 5 p.m. ET 11/25/16.

Take notice that the Commission received the following electric rate filings:

Docket Numbers: ER16–1649–006.
Applicants: California Independent System Operator Corporation.
Description: Compliance filing: 2016–11–04 Aliso Canyon Compliance ICE Effective Date to be effective 10/22/2016.
Filed Date: 11/4/16.
Accession Number: 20161104–5148.
Comments Due: 5 p.m. ET 11/25/16.

Docket Numbers: ER16–1901–001.
Applicants: Elevation Solar C LLC.
Description: Compliance filing: Elevation Solar C LLC MBR Tariff to be effective 6/10/2016.
Filed Date: 11/4/16.
Accession Number: 20161104–5137.
Comments Due: 5 p.m. ET 11/25/16.

Docket Numbers: ER16–2023–002.
Applicants: California Independent System Operator Corporation.
Description: Compliance filing: 2016–11–04 Flexible Ramping Product Compliance to be effective 11/1/2016.
Filed Date: 11/4/16.
Accession Number: 20161104–5153.
Comments Due: 5 p.m. ET 11/25/16.

Docket Numbers: ER16–2222–003.
Applicants: Alcoa Power Generating Inc.
Description: Compliance filing: Long Sault Division Compliance Filing to be effective 10/1/2016.
Filed Date: 11/4/16.
Accession Number: 20161104–5160.
Comments Due: 5 p.m. ET 11/25/16.

Docket Numbers: ER16–2223–003.
Applicants: Alcoa Power Generating Inc.
Description: Compliance filing: Tapoco Division Compliance Filing to be effective 10/1/2016.
Filed Date: 11/4/16.
Accession Number: 20161104–5161.
Comments Due: 5 p.m. ET 11/25/16.

Docket Numbers: ER16–2719–001.
Applicants: NextEra Energy Transmission New York, Inc.
Description: Tariff Amendment: NEET New York, Inc. Amendment to Filing to Establish Formula Rate to be effective 11/30/2016.
Filed Date: 11/4/16.
Accession Number: 20161104–5164.
Comments Due: 5 p.m. ET 11/9/16.

Docket Numbers: ER16–2725–001.
Applicants: PSEG Energy Solutions LLC.
Description: Tariff Amendment: PSEG Energy Solutions LLC—Seller Category Clarification to be effective 12/1/2016.
Filed Date: 11/4/16.
Accession Number: 20161104–5162.
Comments Due: 5 p.m. ET 11/25/16.

Docket Numbers: ER17–2–001
Applicants: Frontier Windpower, LLC.
Description: Tariff Amendment: Amendment to MBR Application and Tariff to be effective 10/21/2016.
Filed Date: 11/4/16.
Accession Number: 20161104–5147.

Comments Due: 5 p.m. ET 11/25/16.

Docket Numbers: ER17–287–000.

Applicants: Southern California Edison Company.

Description: Supplement to November 1, 2016 Southern California Edison Company tariff filing (Revised Executed Filing Letter, Exhibits A and B).

Filed Date: 11/2/16.

Accession Number: 20161102–5176.

Comments Due: 5 p.m. ET 11/23/16.

Docket Numbers: ER17–308–000.

Applicants: PacifiCorp.

Description: Tariff Cancellation: Termination of UAMPS E&P Agreement—Lehi to be effective 1/4/2017.

Filed Date: 11/4/16.

Accession Number: 20161104–5141.

Comments Due: 5 p.m. ET 11/25/16.

Docket Numbers: ER17–309–000.

Applicants: PacifiCorp.

Description: Tariff Cancellation: Termination of WAPA Spence & Thermopolis Agreements to be effective 10/14/2016.

Filed Date: 11/4/16.

Accession Number: 20161104–5145.

Comments Due: 5 p.m. ET 11/25/16.

Docket Numbers: ER17–310–000.

Applicants: Southwest Power Pool, Inc.

Description: § 205(d) Rate Filing: Attachment AE Revisions—Clarify TCR Electrically Equivalent Settlement Location to be effective 1/5/2017.

Filed Date: 11/4/16.

Accession Number: 20161104–5156.

Comments Due: 5 p.m. ET 11/25/16.

Docket Numbers: ER17–311–000.

Applicants: SR South Loving LLC.

Description: Baseline eTariff Filing: Market-Based Rate Tariff to be effective 12/5/2016.

Filed Date: 11/4/16.

Accession Number: 20161104–5157.

Comments Due: 5 p.m. ET 11/25/16.

Docket Numbers: ER17–312–000.

Applicants: PJM Interconnection, L.L.C.

Description: § 205(d) Rate Filing: Revisions to RAA Article 1—Clean-Up to Definition of Capacity Import Limit to be effective 6/27/2016.

Filed Date: 11/4/16.

Accession Number: 20161104–5163.

Comments Due: 5 p.m. ET 11/25/16.

The filings are accessible in the Commission's eLibrary system by clicking on the links or querying the docket number.

Any person desiring to intervene or protest in any of the above proceedings must file in accordance with Rules 211 and 214 of the Commission's Regulations (18 CFR 385.211 and 385.214) on or before 5:00 p.m. Eastern time on the specified comment date. Protests may be considered, but intervention is necessary to become a party to the proceeding.

eFiling is encouraged. More detailed information relating to filing requirements, interventions, protests, service, and qualifying facilities filings can be found at: *http://www.ferc.gov/docs-filing/efiling/filing-req.pdf.* For other information, call (866) 208–3676 (toll free). For TTY, call (202) 502–8659.

Dated: November 7, 2016.

Nathaniel J. Davis, Sr.,

Deputy Secretary.

[FR Doc. 2016–27289 Filed 11–10–16; 8:45 am]

BILLING CODE 6717–01–P

DEPARTMENT OF ENERGY

Federal Energy Regulatory Commission

Combined Notice of Filings #1

Take notice that the Commission received the following electric rate filings:

Docket Numbers: ER15–1976–002.

Applicants: Southwest Power Pool, Inc.

Description: Compliance filing: East River Electric Power Cooperative Formula Rate Compliance Filing to be effective 10/1/2015.

Filed Date: 11/3/16.

Accession Number: 20161103–5122.

Comments Due: 5 p.m. ET 11/25/16.

Docket Numbers: ER16–2725–000.

Applicants: PSEG Energy Solutions LLC.

Description: Errata (Appendix B and E) to the October 27, 2016 Amendment to September 30, 2016 PSEG Energy Solutions LLC tariff filing.

Filed Date: 11/3/16.

Accession Number: 20161103–5111.

Comments Due: 5 p.m. ET 11/25/16.

Docket Numbers: ER17–305–000.

Applicants: Midcontinent Independent System Operator, Inc., Ameren Illinois Company, Ameren Transmission Company of Illinois, Northern States Power Company, a Minnesota corporation.

Description: § 205(d) Rate Filing: 2016–11–03_AIC–ATXI–NSP Attachment O revisions related to ADIT calculations to be effective 1/1/2017.

Filed Date: 11/3/16.

Accession Number: 20161103–5127.

Comments Due: 5 p.m. ET 11/25/16.

Docket Numbers: ER17–306–000.

Applicants: Beacon Solar 3, LLC.

Description: Baseline eTariff Filing: Beacon Solar 3, LLC MBR Tariff to be effective 11/4/2016.

Filed Date: 11/3/16.

Accession Number: 20161103–5128.

Comments Due: 5 p.m. ET 11/25/16.

Docket Numbers: ER17–307–000.

Applicants: PECO Energy Company.

Description: Notice of cancellation of Interconnection Service Agreement No. 791 of PECO Energy Company.

Filed Date: 11/3/16.

Accession Number: 20161103–5167.

Comments Due: 5 p.m. ET 11/25/16.

Take notice that the Commission received the following qualifying facility filings:

Docket Numbers: QF16–806–000.

Applicants: Bi-County Gas Producers, LLC.

Description: Refund Report of Bi-County Gas Producers, LLC.

Filed Date: 11/2/16.

Accession Number: 20161102–5199.

Comments Due: 5 p.m. ET 11/23/16.

The filings are accessible in the Commission's eLibrary system by clicking on the links or querying the docket number.

Any person desiring to intervene or protest in any of the above proceedings must file in accordance with Rules 211 and 214 of the Commission's Regulations (18 CFR 385.211 and 385.214) on or before 5:00 p.m. Eastern time on the specified comment date. Protests may be considered, but intervention is necessary to become a party to the proceeding.

eFiling is encouraged. More detailed information relating to filing requirements, interventions, protests, service, and qualifying facilities filings can be found at: *http://www.ferc.gov/docs-filing/efiling/filing-req.pdf.* For other information, call (866) 208–3676 (toll free). For TTY, call (202) 502–8659.

Dated: November 4, 2016.

Nathaniel J. Davis, Sr.,

Deputy Secretary.

[FR Doc. 2016–27254 Filed 11–10–16; 8:45 am]

BILLING CODE 6717–01–P

FEDERAL COMMUNICATIONS COMMISSION

[OMB 3060–1148]

Information Collection Being Reviewed by the Federal Communications Commission Under Delegated Authority

AGENCY: Federal Communications Commission.

ACTION: Notice and request for comments.

SUMMARY: As part of its continuing effort to reduce paperwork burdens, and as

required by the Paperwork Reduction Act (PRA) of 1995 (44 U.S.C. 3501–3520), the Federal Communications Commission (FCC or Commission) invites the general public and other Federal agencies to take this opportunity to comment on the following information collections. Comments are requested concerning: whether the proposed collection of information is necessary for the proper performance of the functions of the Commission, including whether the information shall have practical utility; the accuracy of the Commission's burden estimate; ways to enhance the quality, utility, and clarity of the information collected; ways to minimize the burden of the collection of information on the respondents, including the use of automated collection techniques or other forms of information technology; and ways to further reduce the information collection burden on small business concerns with fewer than 25 employees.

The FCC may not conduct or sponsor a collection of information unless it displays a currently valid OMB control number. No person shall be subject to any penalty for failing to comply with a collection of information subject to the PRA that does not display a valid OMB control number.

DATES: Written PRA comments should be submitted on or before January 13, 2017. If you anticipate that you will be submitting comments, but find it difficult to do so within the period of time allowed by this notice, you should advise the contact listed below as soon as possible.

ADDRESSES: Direct all PRA comments to Cathy Williams, FCC, via email *PRA@fcc.gov* and to *Cathy.Williams@fcc.gov.*

FOR FURTHER INFORMATION CONTACT: For additional information about the information collection, contact Cathy Williams at (202) 418–2918.

SUPPLEMENTARY INFORMATION:

OMB Control Number: 3060–1148.

Title: Section 79.3, Video Description of Video Programming.

Form Number: Not Applicable.

Type of Review: Extension of a currently approved collection.

Respondents: Business or other for-profit entities, Not for profit entities and Individual or households.

Number of Respondents and Responses: 50 respondents, 54 responses.

Estimated Time per Response: 1–5 hours.

Frequency of Response: On occasion reporting requirement.

Total Annual Burden: 115 hours.

Total Annual Costs: $22,140.

Obligation to Respond: Required to obtain or retain benefits. The statutory authority for this collection is contained in 47 U.S.C. 151, 152, 154(i), 303 and 613.

Nature and Extent of Confidentiality: There is no need for confidentiality with this collection of information.

Privacy Impact Assessment: No impact(s).

Needs and Uses: On March 3, 2011, the Commission released a Notice of Proposed Rulemaking (NPRM), FCC 11–36, in the Communications and Video Accessibility Act (CVAA) Video Description proceeding, MB Docket No. 11–43. The NPRM proposed to reinstate the Commission's video description rules adopted in 2000. On April 22, 2011, the Office of Management and Budget (OMB) pre-approved the information collection requirements contained in the proposed rules. On August 25, 2011, the Commission released a Report and Order, FCC 11–126, in the CVAA Video Description proceeding, MB Docket No. 11–43. The Reported and Order adopted the proposed information collection requirements without change. The final rules were codified at 47 CFR 79.3. On September 8, 2011, OMB issued its final approval for the information collection requirements. As discussed below, the information collection requirements include (1) video programming provider petitions for exemption based on ''economic burden'' and (2) non-form consumer complaints alleging violations of the video description rules. On June 25, 2012, the Commission received OMB approval for the removal of a portion of the burden hours and costs that were approved under3060–1148 and placed into collection 3060–0874 (relating to the FCC Form 2000). This modification was due to the filing of complaints alleging violations of the video description rules now being filed via FCC Form 2000C.

Video description is the insertion of audio narrated descriptions of a television program's key visual elements into natural pauses in the program's dialogue, makes video programming more accessible to individuals who are blind or visually impaired. In 2000, the Commission adopted rules requiring certain broadcasters and MVPDs to carry programming with video description. The United States Court of Appeals for the District of Columbia Circuit vacated the rules due to insufficient authority soon after their initial adoption. As directed by the CVAA, the Commission's Report and Order reinstated the video description rules, with certain modifications, effective October 8, 2011. The reinstated rules require large-market broadcast affiliates of the top four national networks and multichannel video programming distributor (''MVPD'') systems with more than 50,000 subscribers to provide video description.

Federal Communications Commission.

Marlene H. Dortch,

Secretary, Office of the Secretary.

[FR Doc. 2016–27321 Filed 11–10–16; 8:45 am]

BILLING CODE 6712–01–P

FEDERAL COMMUNICATIONS COMMISSION

[OMB 3060–0311]

Information Collection Being Reviewed by the Federal Communications Commission

AGENCY: Federal Communications Commission.

ACTION: Notice and request for comments.

SUMMARY: As part of its continuing effort to reduce paperwork burdens, and as required by the Paperwork Reduction Act (PRA) of 1995, the Federal Communications Commission (FCC or Commission) invites the general public and other Federal agencies to take this opportunity to comment on the following information collections. Comments are requested concerning: whether the proposed collection of information is necessary for the proper performance of the functions of the Commission, including whether the information shall have practical utility; the accuracy of the Commission's burden estimate; ways to enhance the quality, utility, and clarity of the information collected; ways to minimize the burden of the collection of information on the respondents, including the use of automated collection techniques or other forms of information technology; and ways to further reduce the information collection burden on small business concerns with fewer than 25 employees.

The FCC may not conduct or sponsor a collection of information unless it displays a currently valid OMB control number. No person shall be subject to any penalty for failing to comply with a collection of information subject to the PRA that does not display a valid OMB control number.

DATES: Written PRA comments should be submitted on or before January 13, 2017. If you anticipate that you will be submitting comments, but find it difficult to do so within the period of time allowed by this notice, you should

advise the contact listed below as soon as possible.

ADDRESSES: Direct all PRA comments to Cathy Williams, FCC, via email *PRA@fcc.gov* and to *Cathy.Williams@fcc.gov.*

FOR FURTHER INFORMATION CONTACT: For additional information about the information collection, contact Cathy Williams at (202) 418–2918.

SUPPLEMENTARY INFORMATION:

OMB Control Number: 3060–0311.

Title: 47 CFR 76.54, Significantly Viewed Signals; Method to be followed for Special Showings.

Form Number: Not applicable.

Type of Review: Extension of a currently approved collection.

Respondents: Business or other for-profit entities.

Number of Respondents and Responses: 500 respondents, 1,274 responses.

Frequency of Response: On occasion reporting and third party disclosure requirements.

Estimated Time per Response: 1–15 hours (average).

Total Annual Burden: 20,610 hours.

Total Annual Cost: $200,000.

Nature of Response: Required to obtain or retain benefits. The statutory authority for this information collection is contained in Section 4(i) and 340 of the Communications Act of 1934, as amended.

Nature and Extent of Confidentiality: There is no need for confidentiality with this collection of information.

Privacy Impact Assessment: No impact(s).

Needs and Uses: 47 CFR 76.54(b) states significant viewing in a cable television or satellite community for signals not shown as significantly viewed under 47 CFR 76.54(a) or (d) may be demonstrated by an independent professional audience survey of over-the-air television homes that covers at least two weekly periods separated by at least thirty days but no more than one of which shall be a week between the months of April and September. If two surveys are taken, they shall include samples sufficient to assure that the combined surveys result in an average figure at least one standard error above the required viewing level.

47 CFR 76.54(c) is used to notify interested parties, including licensees or permittees of television broadcast stations, about audience surveys that are being conducted by an organization to demonstrate that a particular broadcast station is eligible for significantly viewed status under the Commission's rules. The notifications provide interested parties with an opportunity to review survey methodologies and file objections.

47 CFR 76.54(e) and (f), are used to notify television broadcast stations about the retransmission of significantly viewed signals by a satellite carrier into these stations' local market.

Federal Communications Commission.

Marlene H. Dortch,

Secretary, Office of the Secretary.

[FR Doc. 2016–27320 Filed 11–10–16; 8:45 am]

BILLING CODE 6712–01–P

FEDERAL DEPOSIT INSURANCE CORPORATION

Sunshine Act Meeting

Pursuant to the provisions of the ''Government in the Sunshine Act'' (5 U.S.C. 552b), notice is hereby given that the Federal Deposit Insurance Corporation's Board of Directors will meet in open session at 10:00 a.m. on Tuesday, November 15, 2016, to consider the following matters:

Summary Agenda: No substantive discussion of the following items is anticipated. These matters will be resolved with a single vote unless a member of the Board of Directors requests that an item be moved to the discussion agenda.

Disposition of minutes of previous Board of Directors' Meetings.

Memorandum and resolution re: Notice of Proposed Rulemaking: Removing Former OTS Rule Part 390 Subpart I and Revising FDIC Rule Part 343 (Consumer Protections in the Sale of Insurance).

Memorandum and resolution re: Interim Final Rule Amending the FDIC's Freedom of Information Act Regulations at 12 CFR 309.2 (Definitions), 12 CFR 309.4 (Publicly available records) and 12 CFR 309.5 (Procedures for requesting records).

Reports of the Office of Inspector General.

Discussion Agenda:

Memorandum and resolution re: Final Rule—Recordkeeping for Timely Deposit Insurance Determination.

The meeting will be held in the Board Room located on the sixth floor of the FDIC Building located at 550 17th Street NW., Washington, DC.

This Board meeting will be Webcast live via the Internet and subsequently made available on-demand approximately one week after the event. Visit *http://fdic.windrosemedia.com* to view the event. If you need any technical assistance, please visit our Video Help page at: *https://www.fdic.gov/video.html.*

The FDIC will provide attendees with auxiliary aids (*e.g.,* sign language interpretation) required for this meeting. Those attendees needing such assistance should call 703–562–2404 (Voice) or 703–649–4354 (Video Phone) to make necessary arrangements.

Requests for further information concerning the meeting may be directed to Mr. Robert E. Feldman, Executive Secretary of the Corporation, at 202–898–7043.

Dated: November 8, 2016.

Federal Deposit Insurance Corporation.

Robert E. Feldman,

Executive Secretary.

[FR Doc. 2016–27385 Filed 11–9–16; 11:15 am]

BILLING CODE P

FEDERAL FINANCIAL INSTITUTIONS EXAMINATION COUNCIL

[Docket No. FFIEC–2016–0003]

Uniform Interagency Consumer Compliance Rating System

AGENCY: Federal Financial Institutions Examination Council (FFIEC).

ACTION: Notice; final guidance.

SUMMARY: The Federal Financial Institutions Examination Council (FFIEC), on behalf of its members, is revising the Uniform Interagency Consumer Compliance Rating System, more commonly known as the CC Rating System. The agencies comprising the FFIEC are the Board of Governors of the Federal Reserve System (FRB), the Consumer Financial Protection Bureau (CFPB), the Federal Deposit Insurance Corporation (FDIC), the National Credit Union Administration (NCUA), the Office of the Comptroller of the Currency (OCC), and the State Liaison Committee (SLC) (Agencies). The FFIEC promotes compliance with federal consumer protection laws and regulations through each agency's supervisory and outreach programs.

The CC Rating System revisions reflect the regulatory, examination (supervisory), technological, and market changes that have occurred in the years since the original rating system was established in 1980. The revisions are designed to better reflect current consumer compliance supervisory approaches and to more fully align the CC Rating System with the Agencies' current risk-based, tailored examination processes. The CC Rating System is being published after consideration of comments received from the public.

DATES: Effective March 31, 2017.

FOR FURTHER INFORMATION CONTACT:

Board: Lanette Meister, Senior Supervisory Consumer Financial Services Analyst, Board of Governors of the Federal Reserve System, 20th and C Streets NW., Washington, DC 20551, (202) 452–2705.

CFPB: Cassandra Huggins, Attorney-Advisor, Consumer Financial Protection Bureau, 1700 G Street NW., Washington, DC 20552, (202) 435–9177.

FDIC: Ardie Hollifield, Senior Policy Analyst, Federal Deposit Insurance Corporation, 550 17th Street NW., Washington, DC 20429–0002, (202) 898–6638; John Jackwood, Senior Policy Analyst, (202) 898–3991; or Faye Murphy, Chief, Consumer Compliance and UDAP Examination Section, (202) 898–6613.

NCUA: Matthew J. Biliouris, Deputy Director, Office of Consumer Financial Protection and Access, National Credit Union Administration, 1775 Duke Street, Alexandria, VA 22314–3428, (703) 518–1161.

OCC: Kimberly Hebb, Director of Compliance Policy, Office of the Comptroller of the Currency, 400 7th Street SW., Washington, DC 20219, (202) 649–5470; or Michael S. Robertson, Compliance Specialist, (202) 649–5470.

SLC: Matthew Lambert, Policy Counsel, Conference of State Bank Supervisors, 1129 20th Street NW., 9th Floor, Washington, DC 20036, (202) 407–7130.

SUPPLEMENTARY INFORMATION:

Background

Pursuant to 12 U.S.C. 3301 *et seq.,* the FFIEC, established in 1979, is a formal interagency body empowered to prescribe principles and standards for the federal examination of financial institutions and to make recommendations to promote consistency and coordination in the supervision of institutions.

The FFIEC promotes compliance with federal consumer protection laws and regulations through each agency's supervisory and outreach programs. Through compliance supervision, the Agencies determine whether an institution is meeting its responsibility to comply with applicable requirements.

On May 3, 2016, the FFIEC published a notice and request for comment in the **Federal Register** (May Proposal), 81 FR 26553, requesting comment on proposed revisions to the CC Rating System. The CC Rating System is a supervisory policy for evaluating financial institutions' [1] adherence to consumer compliance requirements. It provides a general framework for evaluating compliance assessment factors in order to assign a consumer compliance rating to each federally regulated financial institution.[2] The primary purpose of the CC Rating System is to ensure that regulated financial institutions are evaluated in a comprehensive and consistent manner and that supervisory resources are appropriately focused on areas exhibiting risk of consumer harm and on institutions that warrant elevated supervisory attention. The revised CC Rating System emphasizes the importance of institutions' compliance management systems (CMS), with emphasis on compliance risk management practices designed to manage consumer compliance risk, support compliance, and prevent consumer harm.

The CC Rating System is based upon a scale of 1 through 5, in increasing order of supervisory concern. Thus, 1 represents the highest rating and consequently the lowest level of supervisory concern, while 5 represents the lowest rating and consequently the most critically deficient level of performance and the highest degree of supervisory concern. When using the CC Rating System to assess an institution, the Agencies do not consider an institution's record of performance under the Community Reinvestment Act (CRA) because institutions are evaluated separately for CRA.

Purpose of the Revisions

The CC Rating System revisions are designed to better reflect current consumer compliance supervisory approaches and to more fully align the rating system with the Agencies' current risk-based, tailored examination processes. The revisions to the CC Rating System were not developed to set new or higher supervisory expectations for financial institutions and their adoption will represent no additional regulatory burden.

When the original CC Rating System was adopted in 1980, examinations focused more on transaction testing for regulatory compliance rather than evaluating the sufficiency of an institution's CMS to ensure compliance with regulatory requirements and to prevent consumer harm. In the intervening years, each of the Agencies has adopted a risk-based consumer compliance examination approach to promote strong compliance risk management practices and consumer protection within supervised financial institutions. Risk-based consumer compliance supervision evaluates whether an institution's CMS effectively manages the compliance risk in the products and services offered to its customers. Under risk-based supervision, examiners tailor supervisory activities to the size, complexity, and risk profile of each institution and adjust these activities over time. While compliance management programs vary based on the size, complexity, and risk profile of supervised institutions, all institutions should maintain an effective CMS. The sophistication and formality of the CMS typically will increase commensurate with the size, complexity, and risk profile of the entity.

As the Agencies drafted the new rating system definitions, one objective was to develop a rating system appropriate for evaluating institutions of all sizes. Therefore, the revised CC Rating System conveys that the system is risk-based to recognize and communicate clearly that compliance management programs vary based on the size, complexity, and risk profile of supervised institutions. This concept is reinforced in the Consumer Compliance Rating Definitions by conveying to examiners that assessment factors associated with an institution's CMS should be evaluated commensurate with the institution's size, complexity, and risk profile.

In developing the revised CC Rating System, the Agencies believed it was also important for the new rating system to establish incentives for institutions to promote consumer protection by preventing, self-identifying, and addressing compliance issues in a proactive manner. Therefore, the revised rating system recognizes institutions that consistently adopt these compliance strategies.

Another benefit of the new CC Rating System is to promote coordination, communication, and consistency among the Agencies, consistent with the Agencies' respective supervisory authorities. Each of the Agencies will use the CC Rating System to assign a consumer compliance rating to supervised institutions, including banks and nonbanks, as appropriate, consistent with the agency's supervisory authority. Further, revising the rating system definitions responds to requests

[1] The term *financial institutions* is defined in 12 U.S.C. 3302(3).

[2] NCUA integrates the principles and standards of the current CC Rating System into the existing CAMEL rating structure, in place of a separate rating. When finalized, the revised CC Rating System will be incorporated into NCUA's risk-focused examination program. Using the principles and standards contained in the revised CC Rating System, NCUA examiners will assess a credit union's ability to effectively manage its compliance risk and reflect that ability in the Management component rating and the overall CAMEL rating used by NCUA.

from industry representatives who have asked that the CC Rating System be updated.

Summary of Comments Received

The FFIEC received 17 comments regarding the proposed revisions to the CC Rating System. Eight of the comments were from financial institution trade associations, three from consumer and community advocacy organizations, two from trade consultants, one from a financial holding company, one from an individual, and two from anonymous sources.

Commenters generally favored the changes to the CC Rating System, commending the Agencies':

1. Recognition of the need for the CC Rating System to be risk-based and focus more on the sufficiency of the CMS;
2. inclusion of incentives to support institutions' establishment of effective consumer compliance programs;
3. consideration of violations of consumer laws based on root cause, severity, duration, and pervasiveness;
4. inclusion of third-party relationships; and
5. application of the same rating system across providers of consumer financial services under the Agencies' jurisdictions.

Some commenters recommended clarifying changes to various aspects of the revised rating system, as described below. After consideration of all comments, the FFIEC is issuing this final CC Rating System substantially as proposed, but with some changes for clarification purposes. The following discussion describes the comments received and changes made to the CC Rating System in response. The final updated CC Rating System is included at the end of this Notice.

Principles of the Interagency CC Rating System

The Agencies developed four principles to serve as a foundation for the CC Rating System. Under those principles, the rating system must be risk-based, transparent, actionable, and should incent compliance.

The Agencies received comments concerning the first principle, which states that the CC Rating System must be risk-based. One commenter encouraged the Agencies to adopt standards that are risk-based to ensure that small institutions are not overwhelmed by unwieldy regulatory burden. The Agencies agree. As explained above, the revisions to the CC Rating System were not developed to set new or higher supervisory expectations for financial institutions and their adoption will not increase regulatory burden. Additionally, the CC Rating System directs examiners to assess an institution's CMS commensurate with the institution's size, complexity, and risk profile.

Five-Level Rating Scale

Commenters recommended that descriptive language be added to each of the five levels of the CC Rating System and to certain assessment factors, and that specific examples be provided to clarify what is required under the new rating system. One commenter stated that the distinction between the assessment factor levels is subjective. Another commenter suggested that the CC Rating System use descriptive adjectives instead of numbers to portray examination ratings. The Agencies believe that the adjectives used in each of the assessment factors under the numerical ratings contained in the Consumer Compliance Rating Definitions, as well as the description of the numerical ratings contained in the Guidance, provide useful terms and clear distinctions between the rating levels. The rating levels and categories will allow examiners to distinguish between varying degrees of supervisory concern when rating institutions. Therefore, the Agencies concluded that the addition of descriptive terms to the numerical rating in the CC Rating System would not be necessary.

A commenter suggested that each of the three categories of assessment factors should be assigned a numerical average or weight of importance. The consumer compliance rating reflects a comprehensive evaluation of a financial institution's performance by considering the categories and assessment factors in the context of the size, complexity, and risk profile of the institution. Thus, the rating is not based on a numeric average or any other quantitative calculation. The relative importance of each category or assessment factor may differ based on the size, complexity, and risk profile of an individual institution. Accordingly, one or more category or assessment factor may be more or less relevant at one financial institution as compared to another institution. An examiner must balance conclusions about the effectiveness of the financial institution's CMS over the individual products, services, and activities of the organization when arriving at a consumer compliance rating. Therefore, the Agencies do not believe it would be appropriate to implement a numerical average or weighting within the final CC Rating System.

Board and Management Oversight

Commenters recommended that the Agencies incorporate discussion of the *Culture of Compliance* into the Board and Management Oversight category. Commenters provided components of a compliance culture such as the Board and Management's commitment to the existence and effectiveness of policies, procedures, risk assessments, due diligence, training, accountability, and an environment in which staff can report compliance issues and receive a positive response from management. The Agencies believe that the details defined in the Consumer Compliance Rating Definitions under Board and Management Oversight address the concerns stated by the commenters by making clear that management teams that achieve satisfactory or better performance exhibit a commitment to each of those areas.

Corrective Action and Self-Identification

A commenter observed that the CC Rating System appropriately encourages a financial institution to proactively correct violations and to provide remediation to affected consumers. However, that commenter suggested the Agencies provide more guidance to make clear that an entity's subsequent corrective action would not compensate for a consistent pattern of non-compliance and weak management. The Agencies agree and believe that this point is reflected in the guidance. The Violations and Consumer Harm category ensures that examiners consider noncompliance and resulting consumer harm when assigning a rating. The other categories require examiners to evaluate the effectiveness of the institution's management and compliance program to identify and manage compliance risk in the institution's products and services and to prevent violations of law and consumer harm.

One commenter expressed concern that the concept of *self-identification* was presented inconsistently in the May Proposal. The commenter noted that the Corrective Action and Self-Identification assessment factor was described only as, any corrective action undertaken as consumer compliance issues are identified within the proposed CC Rating System guidance. The commenter noted that elsewhere in the proposal, discussion of this assessment factor appropriately incorporates the concept of *self-identification.* The Agencies have updated language in the Guidance to clarify discussion of this assessment factor by adding reference to self-identification of consumer compliance

issues to the description of the Corrective Action and Self-Identification assessment factor.

Training

One commenter recommended that the CC Rating System require training programs to adequately train employees on compliance with fair lending and consumer protection laws. The Agencies believe that the definitions included in the Training assessment factor appropriately describe the Agencies' expectations that compliance training programs encompass consumer protection laws and regulations and do not believe that more specificity would be helpful.

Third-Party Relationships

One commenter supported the assessment of third-party relationship management within the CC Rating System. The commenter stated that regulatory oversight of third-party relationships is critical to ensure that financial institutions do not use those relationships to avoid compliance with consumer protection and fair lending laws.

Another commenter suggested the CC Rating System should clarify that the evaluation of an institution's third-party relationships will be limited to relationships between the financial institutions and vendors that impact consumer financial products and services. Specifically, the commenter suggested the Agencies should clarify that the CC Rating System does not extend to the financial institutions' broad third-party relationship management program. The Agencies note that the CC Rating System requires examiners to review a financial institution's management of third-party relationships and servicers as part of its overall consumer compliance program. The CC Rating System does not impose specific expectations for management of third-party relationships. Such expectations are provided in separate guidance issued by each of the Agencies.[3]

Violations of Law and Consumer Harm

Commenters expressed conflicting concerns over the Violations of Law and Consumer Harm category. Some noted that the category is defined too narrowly in that it does not appropriately consider practices that present a risk of harm to consumers that are not clear violations of law. The Agencies believe that management of compliance risk is appropriately considered in the other two categories. Specifically, the first two categories, ''Board and Management Oversight and Compliance Program include, for example, consideration of how effectively institutions identify and manage compliance risks, including emerging risks; assessment of whether institutions evaluate product changes before and after implementing the changes; and evaluation of the sufficiency of the institution's procedures, training, and monitoring practices to manage compliance risk in the products, services, and activities of the institution. Others commented that the CC Rating System should be narrowed to address only violations of law that result in consumer harm. These commenters believe that a CMS deficiency exists only when a legal violation occurs that results in sufficient consumer harm. The Agencies disagree that a CMS can only be judged to be deficient when violations of law occur. The CC Rating System incents institutions to implement a CMS that effectively prevents, identifies, and addresses CMS deficiencies and any violations of laws or regulations.

One commenter noted that the Rating Categories should be weighted, with Violations of Law and Consumer Harm carrying the most weight because the commenter believes that prevention of violations and consumer harm is the entire purpose of the CC Rating System. While preventing consumer harm is critically important and integral to the CC Rating System, the Agencies disagree that the best way to achieve this purpose would be by requiring that this category always be weighted more than the others. The Agencies believe that CMS plays a critical role in prevention of violations and consumer harm. Thus, while the Violations of Law and Consumer Harm category evaluates violations and harm that have occurred, the other two categories evaluate the effectiveness of the CMS to prevent consumer violations and harm.

Severity

One commenter stated that the severity of a violation should not be based solely on the dollar amount of consumer harm. The revised CC Rating System does not base severity solely on a dollar amount of harm. The CC Rating system acknowledges that while many instances of consumer harm can be quantified as a dollar amount associated with financial loss, such as charging higher fees for a product than was initially disclosed, consumer harm may also result from a denial of an opportunity.

Assignment of Ratings by Supervisors

Several commenters encouraged the Agencies to implement a rating system with a single consumer compliance rating for all institutions, including those with assets greater than $10 billion. Commenters noted concerns with reconciling different ratings issued by two agencies and questioned whether two consumer compliance ratings could provide actionable feedback and effective incentives to supervised institutions. The Agencies believe that the detail that examiners provide regarding the scope of the compliance areas and products reviewed in arriving at a consumer compliance rating furnishes sufficient context to support effective financial institution response to rating conclusions. The CFPB will continue to issue consumer compliance ratings to providers of consumer financial products and services under its supervisory jurisdiction.

Comments Out of Scope of the CC Rating System

Commenters also submitted comments that, while broadly related to consumer compliance ratings, fall outside the scope of the CC Rating System. For example, some commenters identified specific consumer protection issues, such as overdraft practices and bank partnerships with non-bank lenders, that they believe should merit heightened consideration within the examination process. While these issues may be important, the CC Rating System does not provide guidance to examiners regarding specific consumer compliance issues. The Agencies provide such issue-oriented guidance and guidance on risk-focused supervision in separate official letters and bulletins.

Three commenters suggested that the CC Rating System require examiners to provide a summary of the institution's

[3] Guidance from the Agencies addressing third-party relationships is generally available on their respective Web sites. See, *e.g.,* CFPB Bulletin 2012–03, ''Service Providers'' (April. 13, 2012), available at *http://files.consumerfinance.gov/f/201204_cfpb_bulletin_service-providers.pdf;* FDIC FIL 44–2208, ''Managing Third-Party Risk'' (June 6, 2008), available at *http://www.fdic.gov/news/news/financial/2008/fil08044a.html;* NCUA Letter to Credit Unions 07–CU–13, ''Evaluating Third Party Relationships'' (December 2007), available at *http://www.ncua.gov/Resources/Documents/LCU2007-13.pdf;* OCC Bulletin OCC 2013–29, ''Third-Party Relationship: Risk Management Guidances'' (October 30, 2013), available at *http://www.occ.gov/news-issuances/bulletins/2013/bulletin-2013-29.html;* Interagency Guidance, ''Weblinking: Identifying Risks and Risk Management Techniques'' (2003), available at *http://www.occ.treas.gov/news-issuances/bulletins/2003/bulletin-2003-15a.pdf.;* NCUA Letter to Credit Unions 03–CU–08, ''Weblinking: Identifying Risks & Risk Management Techniques'' (April 2003), available at *http://ithandbook.ffiec.gov/media/resources/3315/ncu-03-cu-08_weblinking_tech.pdf.* See SR 13–19/CA 13–21, ''Guidance on Managing Outsourcing Risk'' (December 5, 2013) available at *http://www.federalreserve.gov/bankinforeg/srletters/sr1319.htm.*

performance within each category. Historically, examiners at each agency have articulated factors contributing to the consumer compliance rating within the Report of Examination. Financial institutions will continue to receive this information through that report.

One commenter suggested mandatory penalties for less-than-satisfactory performance. The CC Rating System does not address the Agencies' supervisory response to consumer compliance ratings.

Two commenters also suggested that the FFIEC should conduct an assessment of examination results across the Agencies to evaluate the success of the CC Rating System implementation. Each agency maintains formal training and comprehensive quality assurance processes to ensure consistent application of policy changes and uses these tools on an ongoing basis.

Another commenter emphasized that the Agencies should promote transparency through public release of ratings. Ratings are confidential supervisory information that are prohibited from disclosure except as authorized by federal laws and regulations.

Two commenters supported the NCUA's approach to integrate the principles and standards of the CC Rating System into the existing CAMEL rating structure, in place of a separate or stand-alone CC rating. Using the principles and standards contained in the revised CC Rating System, NCUA examiners will incorporate their assessment of a credit union's ability to effectively manage its compliance risk into the Management component rating and the overall CAMEL rating used by NCUA.

Implementation Date

The FFIEC recommends that the Agencies implement the updated CC Rating System for consumer compliance examinations that begin on or after March 31, 2017.[4]

FFIEC Guidance on the Uniform Interagency Consumer Compliance Rating System

Uniform Interagency Consumer Compliance Rating System

The Federal Financial Institutions Examination Council (FFIEC) member agencies (Agencies) promote compliance with federal consumer protection laws and regulations through supervisory and outreach programs.[5] The Agencies engage in consumer compliance supervision to assess whether a financial institution is meeting its responsibility to comply with these requirements.

This Uniform Interagency Consumer Compliance Rating System (CC Rating System) provides a general framework for assessing risks during the supervisory process using certain compliance factors and assigning an overall consumer compliance rating to each federally regulated financial institution.[6] The primary purpose of the CC Rating System is to ensure that regulated financial institutions are evaluated in a comprehensive and consistent manner, and that supervisory resources are appropriately focused on areas exhibiting risk of consumer harm and on institutions that warrant elevated supervisory attention.

The CC Rating System is composed of guidance and definitions. The guidance provides examiners with direction on how to use the definitions when assigning a consumer compliance rating to an institution. The definitions consist of qualitative descriptions for each rating category and include compliance management system (CMS) elements reflecting risk control processes designed to manage consumer compliance risk and considerations regarding violations of laws, consumer harm, and the size, complexity, and risk profile of an institution. The consumer compliance rating reflects the effectiveness of an institution's CMS to ensure compliance with consumer protection laws and regulations and reduce the risk of harm to consumers.

Principles of the Interagency CC Rating System

The Agencies developed the following principles to serve as a foundation for the CC Rating System.

Risk-based. Recognize and communicate clearly that CMS vary based on the size, complexity, and risk profile of supervised institutions.

Transparent. Provide clear distinctions between rating categories to support consistent application by the Agencies across supervised institutions. Reflect the scope of the review that formed the basis of the overall rating.

Actionable. Identify areas of strength and direct appropriate attention to specific areas of weakness, reflecting a risk-based supervisory approach. Convey examiners' assessment of the effectiveness of an institution's CMS, including its ability to prevent consumer harm and ensure compliance with consumer protection laws and regulations.

Incent Compliance. Incent the institution to establish an effective consumer compliance system across the institution and to identify and address issues promptly, including self-identification and correction of consumer compliance weaknesses. Reflect the potential impact of any consumer harm identified in examination findings.

Five-Level Rating Scale

The CC Rating System is based upon a numeric scale of 1 through 5 in increasing order of supervisory concern. Thus, 1 represents the highest rating and consequently the lowest degree of supervisory concern, while 5 represents the lowest rating and the most critically deficient level of performance, and therefore, the highest degree of supervisory concern.[7] Ratings of 1 or 2 represent satisfactory or better performance. Ratings of 3, 4, or 5 indicate performance that is less than satisfactory. Consistent with the previously described Principles, the rating system incents a financial institution to establish an effective CMS across the institution, to self-identify risks, and to take the necessary actions to reduce the risk of non-compliance and consumer harm.

- The highest rating of 1 is assigned to a financial institution that maintains a strong CMS and takes action to prevent violations of law and consumer harm.
- A rating of 2 is assigned to a financial institution that maintains a CMS that is satisfactory at managing consumer compliance risk in the institution's products and services and at substantially limiting violations of law and consumer harm.
- A rating of 3 reflects a CMS deficient at managing consumer

[4] For institutions with continuous target supervisory activities during a 12-month supervisory cycle, the Consumer Compliance Rating System Guidance will be used when the supervisory cycle for that institution ends on or after March 31, 2017.

[5] The FFIEC members are the Board of Governors of the Federal Reserve System, the Consumer Financial Protection Bureau (CFPB), the Federal Deposit Insurance Corporation, the National Credit Union Administration, the Office of the Comptroller of the Currency, and the State Liaison Committee.

[6] The Federal Financial Institutions Examination Council Act of 1978 (12 U.S.C. 3302(3)) defines *financial institution.* Additionally, as a member of the FFIEC, the CFPB will also use the CC Rating System to assign a consumer compliance rating, as appropriate for nonbanks, for which it has jurisdiction regarding the enforcement of *Federal consumer financial laws* as defined under the Dodd-Frank Wall Street Reform and Consumer Protection Act (Dodd-Frank Act) (12 U.S.C. 5481 *et seq.).*

[7] The Agencies do not consider an institution's record of performance under the Community Reinvestment Act (CRA) in conjunction with assessing an institution under the CC Rating System since institutions are evaluated separately under the CRA.

compliance risk in the institution's products and services and at limiting violations of law and consumer harm.

• A rating of 4 reflects a CMS seriously deficient at managing consumer compliance risk in the institution's products and services and/or at preventing violations of law and consumer harm. *Seriously deficient* indicates fundamental and persistent weaknesses in crucial CMS elements and severe inadequacies in core compliance areas necessary to operate within the scope of statutory and regulatory consumer protection requirements and to prevent consumer harm.

• A rating of 5 reflects a CMS critically deficient at managing consumer compliance risk in the institution's products and services and/or at preventing violations of law and consumer harm. *Critically deficient* indicates an absence of crucial CMS elements and a demonstrated lack of willingness or capability to take the appropriate steps necessary to operate within the scope of statutory and regulatory consumer protection requirements and to prevent consumer harm.

CC Rating System Categories and Assessment Factors

CC Rating System—Categories

The CC Rating System is organized under three broad categories:

1. Board and Management Oversight,
2. Compliance Program, and
3. Violations of Law and Consumer Harm.

The Consumer Compliance Rating Definitions below list the assessment factors considered within each category, along with narrative descriptions of performance.

The first two categories, Board and Management Oversight and Compliance Program, are used to assess a financial institution's CMS. As such, examiners should evaluate the assessment factors within these two categories commensurate with the institution's size, complexity, and risk profile. All institutions, regardless of size, should maintain an effective CMS. The sophistication and formality of the CMS typically will increase commensurate with the size, complexity, and risk profile of the entity.

Additionally, compliance expectations contained within the narrative descriptions of these two categories extend to third-party relationships into which the financial institution has entered. There can be certain benefits to financial institutions engaging in relationships with third parties, including gaining operational efficiencies or an ability to deliver additional products and services, but such arrangements also may expose financial institutions to risks if not managed effectively. The prudential agencies, the CFPB, and some states have issued guidance describing expectations regarding oversight of third-party relationships. While an institution's management may make the business decision to outsource some or all of the operational aspects of a product or service, the institution cannot outsource the responsibility for complying with laws and regulations or managing the risks associated with third-party relationships.

As noted in the Consumer Compliance Rating Definitions, examiners should evaluate activities conducted through third-party relationships as though the activities were performed by the institution itself. Examiners should review a financial institution's management of third-party relationships and servicers as part of its overall compliance program.

The third category, Violations of Law and Consumer Harm, includes assessment factors that evaluate the dimensions of any identified violation or consumer harm. Examiners should weigh each of these four factors—root cause, severity, duration, and pervasiveness—in evaluating relevant violations of law and any resulting consumer harm.

Board and Management Oversight—Assessment Factors

Under Board and Management Oversight, the examiner should assess the financial institution's board of directors and management, as appropriate for their respective roles and responsibilities, based on the following assessment factors:

• Oversight of and commitment to the institution's CMS;

• effectiveness of the institution's change management processes, including responding timely and satisfactorily to any variety of change, internal or external, to the institution;

• comprehension, identification, and management of risks arising from the institution's products, services, or activities; and

• self-identification of consumer compliance issues and corrective action undertaken as such issues are identified.

Compliance Program—Assessment Factors

Under Compliance Program, the examiner should assess other elements of an effective CMS, based on the following assessment factors:

• Whether the institution's policies and procedures are appropriate to the risk in the products, services, and activities of the institution;

• the degree to which compliance training is current and tailored to risk and staff responsibilities;

• the sufficiency of the monitoring and, if applicable, audit to encompass compliance risks throughout the institution; and

• the responsiveness and effectiveness of the consumer complaint resolution process.

Violations of Law and Consumer Harm—Assessment Factors

Under Violations of Law and Consumer Harm, the examiner should analyze the following assessment factors:

• the root cause, or causes, of any violations of law identified during the examination;

• the severity of any consumer harm resulting from violations;

• the duration of time over which the violations occurred; and

• the pervasiveness of the violations.

As a result of a violation of law, consumer harm may occur. While many instances of consumer harm can be quantified as a dollar amount associated with financial loss, such as charging higher fees for a product than was initially disclosed, consumer harm may also result from a denial of an opportunity. For example, a consumer could be harmed when a financial institution denies the consumer credit or discourages an application in violation of the Equal Credit Opportunity Act,[8] whether or not there is resulting financial harm.

This category of the Consumer Compliance Rating Definitions defines four factors by which examiners can assess violations of law and consumer harm.

Root Cause. The Root Cause assessment factor analyzes the degree to which weaknesses in the CMS gave rise to the violations. In many instances, the root cause of a violation is tied to a weakness in one or more elements of the CMS. Violations that result from critical deficiencies in the CMS evidence a critical absence of management oversight and are of the highest supervisory concern.

Severity. The Severity assessment factor of the Consumer Compliance Rating Definitions weighs the type of consumer harm, if any, that resulted from violations of law. More severe harm results in a higher level of supervisory concern under this factor.

[8] 15 U.S.C. 1691 *et seq.*

For example, some consumer protection violations may cause significant financial harm to a consumer, while other violations may cause negligible harm, based on the specific facts involved.

Duration. The Duration assessment factor considers the length of time over which the violations occurred. Violations that persist over an extended period of time will raise greater supervisory concerns than violations that occur for only a brief period of time. When violations are brought to the attention of an institution's management and management allows those violations to remain unaddressed, such violations are of the highest supervisory concern.

Pervasiveness. The Pervasiveness assessment factor evaluates the extent of the violation(s) and resulting consumer harm, if any. Violations that affect a large number of consumers will raise greater supervisory concern than violations that impact a limited number of consumers. If violations become so pervasive that they are considered to be widespread or present in multiple products or services, the institution's performance under this factor is of the highest supervisory concern.

Self-Identification of Violations of Law and Consumer Harm

Strong compliance programs are proactive. They promote consumer protection by preventing, self-identifying, and addressing compliance issues in a proactive manner. Accordingly, the CC Rating System provides incentives for such practices through the definitions associated with a 1 rating.

The Agencies believe that self-identification and prompt correction of violations of law reflect strengths in an institution's CMS. A robust CMS appropriate for the size, complexity and risk profile of an institution's business often will prevent violations or will facilitate early detection of potential violations. This early detection can limit the size and scope of consumer harm. Moreover, self-identification and prompt correction of serious violations represents concrete evidence of an institution's commitment to responsibly address underlying risks. In addition, appropriate corrective action, including both correction of programmatic weaknesses and full redress for injured parties, limits consumer harm and prevents violations from recurring in the future. Thus, the CC Rating System recognizes institutions that consistently adopt these strategies as reflected in the Consumer Compliance Rating Definitions.

Evaluating Performance Using the CC Rating Definitions

The consumer compliance rating is derived through an evaluation of the financial institution's performance under each of the assessment factors described above. The consumer compliance rating reflects the effectiveness of an institution's CMS to identify and manage compliance risk in the institution's products and services and to prevent violations of law and consumer harm, as evidenced by the financial institution's performance under each of the assessment factors.

The consumer compliance rating reflects a comprehensive evaluation of the financial institution's performance under the CC Rating System by considering the categories and assessment factors in the context of the size, complexity, and risk profile of an institution. It is not based on a numeric average or any other quantitative calculation. Specific numeric ratings will not be assigned to any of the 12 assessment factors. Thus, an institution need not achieve a satisfactory assessment in all categories in order to be assigned an overall satisfactory rating. Conversely, an institution may be assigned a less than satisfactory rating even if some of its assessments were satisfactory.

The relative importance of each category or assessment factor may differ based on the size, complexity, and risk profile of an individual institution. Accordingly, one or more category or assessment factor may be more or less relevant at one financial institution as compared to another institution. While the expectations for compliance with consumer protection laws and regulations are the same across institutions of varying sizes, the methods for accomplishing an effective CMS may differ across institutions.

The evaluation of an institution's performance within the Violations of Law and Consumer Harm category of the CC Rating Definitions considers each of the four assessment factors: Root Cause, Severity, Duration, and Pervasiveness. At the levels of 4 and 5 in this category, the distinctions in the definitions are focused on the root cause assessment factor rather than Severity, Duration, and Pervasiveness. This approach is consistent with the other categories where the difference between a 4 and a 5 is driven by the institution's capacity and willingness to maintain a sound consumer compliance system.

In arriving at the final rating, the examiner must balance potentially differing conclusions about the effectiveness of the financial institution's CMS over the individual products, services, and activities of the organization. Depending on the relative materiality of a product line to the institution, an observed weakness in the management of that product line may or may not impact the conclusion about the institution's overall performance in the associated assessment factor(s). For example, serious weaknesses in the policies and procedures or audit program of the mortgage department at a mortgage lender would be of greater supervisory concern than those same gaps at an institution that makes very few mortgage loans and strictly as an accommodation. Greater weight should apply to the financial institution's management of material products with significant potential consumer compliance risk.

An institution may receive a less than satisfactory rating even when no violations were identified, based on deficiencies or weaknesses identified in the institution's CMS. For example, examiners may identify weaknesses in elements of the CMS in a new loan product. Because the presence of those weaknesses left unaddressed could result in future violations of law and consumer harm, the CMS deficiencies could impact the overall consumer compliance rating, even if no violations were identified.

Similarly, an institution may receive a 1 or 2 rating even when violations were present, if the CMS is commensurate with the risk profile and complexity of the institution. For example, when violations involve limited impact on consumers, were self-identified, and resolved promptly, the evaluation may result in a 1 or 2 rating. After evaluating the institution's performance in the two CMS categories, Board and Management Oversight and Compliance Program, and the dimensions of the violations in the third category, the examiner may conclude that the overall strength of the CMS and the nature of observed violations viewed together do not present significant supervisory concerns.

Assignment of Ratings by Supervisor(s)

The prudential regulators will continue to assign and update, as appropriate, consumer compliance ratings for institutions they supervise, including those with total assets of more than $10 billion.[9] As a member of the

[9] Section 1025 of the Dodd-Frank Act (12 U.S.C. 5515) applies to federally insured institutions with more than $10 billion in total assets. This section granted the CFPB exclusive authority to examine insured depository institutions and their affiliates for compliance with Federal consumer financial

Continued

FFIEC, the CFPB will also use the CC Rating System to assign a consumer compliance rating, as appropriate, for institutions with total assets of more than $10 billion, as well as for nonbanks for which it has jurisdiction regarding the enforcement of *Federal consumer financial laws* as defined under the Dodd-Frank Act.[10] The prudential regulators will take into consideration any material supervisory information provided by the CFPB, as that information relates to covered supervisory activities or covered examinations.[11] Similarly, the CFPB will take into consideration any material supervisory information provided by prudential regulators in appropriate supervisory situations.

State regulators maintain supervisory authority to conduct examinations of state-chartered depository institutions and licensed entities. As such, states may assign consumer compliance ratings to evaluate compliance with both state and federal laws and regulations. States will collaborate and consider material supervisory information from other state and federal regulatory agencies during the course of examinations.

CONSUMER COMPLIANCE RATING DEFINITIONS

Assessment factors to be considered	1	2	3	4	5
Board and Management Oversight					
Board and management oversight factors should be evaluated commensurate with the institution's size, complexity, and risk profile. Compliance expectations below extend to third-party relationships.					
Oversight and Commitment.	Board and management demonstrate strong commitment and oversight to the financial institution's compliance management system.	Board and management provide satisfactory oversight of the financial institution's compliance management system.	Board and management oversight of the financial institution's compliance management system is deficient.	Board and management oversight, resources, and attention to the compliance management system are seriously deficient.	Board and management oversight, resources, and attention to the compliance management system are critically deficient.
	Substantial compliance resources are provided, including systems, capital, and human resources commensurate with the financial institution's size, complexity, and risk profile. Staff is knowledgeable, empowered and held accountable for compliance with consumer laws and regulations.	Compliance resources are adequate and staff is generally able to ensure the financial institution is in compliance with consumer laws and regulations.	Compliance resources and staff are inadequate to ensure the financial institution is in compliance with consumer laws and regulations.	Compliance resources and staff are seriously deficient and are ineffective at ensuring the financial institution's compliance with consumer laws and regulations.	Compliance resources are critically deficient in supporting the financial institution's compliance with consumer laws and regulations, and management and staff are unwilling or incapable of operating within the scope of consumer protection laws and regulations.
	Management conducts comprehensive and ongoing due diligence and oversight of third parties consistent with agency expectations to ensure that the financial institution complies with consumer protection laws, and exercises strong oversight of third parties' policies, procedures, internal controls, and training to ensure consistent oversight of compliance responsibilities.	Management conducts adequate and ongoing due diligence and oversight of third parties to ensure that the financial institution complies with consumer protection laws, and adequately oversees third parties' policies, procedures, internal controls, and training to ensure appropriate oversight of compliance responsibilities.	Management does note adequately conduct due diligence and oversite of third parties to ensure that the financial institution complies with consumer protection laws, nor does it adequately oversees third parties' policies, procedures, internal controls, and training to ensure appropriate oversight of compliance responsibilities.	Management oversight and due diligence over third-party performance, as well as management's ability to adequately identify, measure, monitor, or manage compliance risks, is seriously deficient.	Management oversight and due diligence of third-party performance is critically deficient.

laws. The prudential regulators retained authority for examining insured depository institutions with more than $10 billion in total assets for compliance with certain other laws related to consumer financial protection, including the Fair Housing Act, the Servicemembers Civil Relief Act, and section 5 of the Federal Trade Commission Act.

[10] 12 U.S.C. 5481 *et seq.* A financial institution with assets over $10 billion may receive a consumer compliance rating by both its primary prudential regulator and the CFPB. The rating is based on each agency's review of the institution's CMS and compliance with the federal consumer protection laws falling under each agency's jurisdiction.

[11] The prudential regulators and the CFPB signed a Memorandum of Understanding on Supervisory Coordination dated May 16, 2012 (MOU) intended to facilitate the coordination of supervisory activities involving financial institutions with more than $10 billion in assets as required under the Dodd-Frank Act.

CONSUMER COMPLIANCE RATING DEFINITIONS—Continued

Assessment factors to be considered	1	2	3	4	5
Change Management	Management anticipates and responds promptly to changes in applicable laws and regulations, market conditions and products and services offered by evaluating the change and implementing responses across impacted lines of business. Management conducts due diligence in advance of product changes, considers the entire life cycle of a product or service in implementing change, and reviews the change after implementation to determine that actions taken have achieved planned results.	Management responds timely and adequately to changes in applicable laws and regulations, market conditions, products and services offered by evaluating the change and implementing responses across impacted lines of business. Management evaluates product changes before and after implementing the change.	Management does not respond adequately and/or timely in adjusting to changes in applicable laws and regulations, market conditions, and products and services offered.	Management's response to changes in applicable laws and regulations, market conditions, or products and services offered is seriously deficient.	Management fails to monitor and respond to changes in applicable laws and regulations, market conditions, or products and services offered.
Comprehension, Identification and Management of Risk.	Management has a solid comprehension of and effectively identifies compliance risks, including emerging risks, in the financial institution's products, services, and other activities. Management actively engages in managing those risks, including through comprehensive self-assessments.	Management comprehends and adequately identifies compliance risks, including emerging risks, in the financial institution's products, services, and other activities. Management adequately manages those risks, including through self-assessments.	Management has an inadequate comprehension of and ability to identify compliance risks, including emerging risks, in the financial institution's products, services, and other activities.	Management exhibits a seriously deficient comprehension of and ability to identify compliance risks, including emerging risks, in the financial institution.	Management does not comprehend nor identify compliance risks, including emerging risks, in the financial institution.
Corrective Action and Self-Identification.	Management proactively identifies issues and promptly responds to compliance risk management deficiencies and any violations of laws or regulations, including remediation.	Management adequately responds to and corrects deficiencies and/or violations, including adequate remediation, in the normal course of business.	Management does not adequately respond to compliance deficiencies and violations including those related to remediation.	Management response to deficiencies, violations and examination findings is seriously deficient.	Management is incapable, unwilling and/or fails to respond to deficiencies, violations or examination findings.

CONSUMER COMPLIANCE RATING DEFINITIONS—Continued

Assessment factors to be considered	1	2	3	4	5
Compliance Program Compliance Program factors should be evaluated commensurate with the institution's size, complexity, and risk profile. Compliance expectations below extend to third-party relationships.					
Policies and Procedures.	Compliance policies and procedures and third-party relationship management programs are strong, comprehensive and provide standards to effectively manage compliance risk in the products, services and activities of the financial institution.	Compliance policies and procedures and third-party relationship management programs are adequate to manage the compliance risk in the products, services and activities of the financial institution.	Compliance policies and procedures and third-party relationship management programs are inadequate at managing the compliance risk in the products, services and activities of the financial institution.	Compliance policies and procedures and third-party relationship management programs are seriously deficient at managing compliance risk in the products, services and activities of the financial institution.	Compliance policies and procedures and third-party relationship management programs are critically absent.
Training	Compliance training is comprehensive, timely, and specifically tailored to the particular responsibilities of the staff receiving it, including those responsible for product development, marketing and customer service.	Compliance training outlining staff responsibilities is adequate and provided timely to appropriate staff.	Compliance training is not adequately comprehensive, timely, updated, or appropriately tailored to the particular responsibilities of the staff.	Compliance training is seriously deficient in its comprehensiveness, timeliness, or relevance to staff with compliance responsibilities, or has numerous major inaccuracies.	Compliance training is critically absent.
	The compliance training program is updated proactively in advance of the introduction of new products or new consumer protection laws and regulations to ensure that all staff are aware of compliance responsibilities before rolled out.	The compliance training program is updated to encompass new products and to comply with changes to consumer protection laws and regulations.			
Monitoring and/or Audit.	Compliance monitoring practices, management information systems, reporting, compliance audit, and internal control systems are comprehensive, timely, and successful at identifying and measuring material compliance risk management throughout the financial institution.	Compliance monitoring practices, management information systems, reporting, compliance audit, and internal control systems adequately address compliance risks throughout the financial institution.	Compliance monitoring practices, management information systems, reporting, compliance audit, and internal control systems do not adequately address risks involving products, services or other activities including, timing and scope.	Compliance monitoring practices, management information systems, reporting, compliance audit, and internal controls are seriously deficient in addressing risks involving products, services or other activities.	Compliance monitoring practices, management information systems, reporting, compliance audit, or internal controls are critically absent.
	Programs are monitored proactively to identify procedural or training weaknesses to preclude regulatory violations. Program modifications are made expeditiously to minimize compliance risk.				

CONSUMER COMPLIANCE RATING DEFINITIONS—Continued

Assessment factors to be considered	1	2	3	4	5
Consumer Complaint Response.	Processes and procedures for addressing consumer complaints are strong. Consumer complaint investigations and responses are prompt and thorough.	Processes and procedures for addressing consumer complaints are adequate. Consumer complaint investigations and responses are generally prompt and thorough.	Processes and procedures for addressing consumer complaints are inadequate. Consumer complaint investigations and responses are not thorough or timely.	Processes and procedures for addressing consumer complaints and consumer complaint investigations are seriously deficient.	Processes and procedures for addressing consumer complaints are critically absent. Meaningful investigations and responses are absent.
	Management monitors consumer complaints to identify risks of potential consumer harm, program deficiencies, and customer service issues and takes appropriate action.	Management adequately monitors consumer complaints and responds to issues identified.	Management does not adequately monitor consumer complaints.	Management monitoring of consumer complaints is seriously deficient.	Management exhibits a disregard for complaints or preventing consumer harm.
Violations of Law and Consumer Harm					
Root Cause	The violations are the result of minor weaknesses, if any, in the compliance risk management system.	Violations are the result of modest weaknesses in the compliance risk management system.	Violations are the result of material weaknesses in the compliance risk management system.	Violations are the result of serious deficiencies in the compliance risk management system.	Violations are the result of critical deficiencies in the compliance risk management system.
Severity	The type of consumer harm, if any, resulting from the violations would have a minimal impact on consumers.	The type of consumer harm resulting from the violations would have a limited impact on consumers.	The type of consumer harm resulting from the violations would have a considerable impact on consumers.	The type of consumer harm resulting from the violations would have a serious impact on consumers.	
Duration	The violations and resulting consumer harm, if any, occurred over a brief period of time.	The violations and resulting consumer harm, if any, occurred over a limited period of time.	The violations and resulting consumer harm, if any, occurred over an extended period of time.	The violations and resulting consumer harm, if any, have been long-standing or repeated.	
Pervasiveness	The violations and resulting consumer harm, if any, are isolated in number.	The violations and resulting consumer harm, if any, are limited in number.	The violations and resulting consumer harm, if any, are numerous.	The violations and resulting consumer harm, if any, are widespread or in multiple products or services.	

[End of proposed text.]

Dated: November 7, 2016.

Federal Financial Institutions Examination Council.

Judith E. Dupre,

FFIEC Executive Secretary.

[FR Doc. 2016–27226 Filed 11–10–16; 8:45 am]

BILLING CODE 7535–01–P; 6714–01–P; 6210–01–P; 4810–33–P; 4810–AM–P

FEDERAL RESERVE SYSTEM

Agency Information Collection Activities: Announcement of Board Approval Under Delegated Authority and Submission to OMB

AGENCY: Board of Governors of the Federal Reserve System.

SUMMARY: The Board of Governors of the Federal Reserve System (Board or Federal Reserve) is adopting a proposal to revise, with extension, the mandatory Uniform Interagency Transfer Agent Registration and Amendment Form. The revisions to this mandatory information are effective December 31, 2016.

On June 15, 1984, the Office of Management and Budget (OMB) delegated to the Board authority under the Paperwork Reduction Act (PRA) to approve of and assign OMB control numbers to collection of information requests and requirements conducted or sponsored by the Board. In exercising this delegated authority, the Board is directed to take every reasonable step to solicit comment. In determining whether to approve a collection of information, the Board will consider all comments received from the public and other agencies.

FOR FURTHER INFORMATION CONTACT:

Federal Reserve Board Clearance Officer—Nuha Elmaghrabi—Office of the Chief Data Officer, Board of Governors of the Federal Reserve System, Washington, DC 20551, (202) 452–3829. Telecommunications Device for the Deaf (TDD) users may contact (202) 263–4869, Board of Governors of the Federal Reserve System, Washington, DC 20551.

OMB Desk Officer—Shagufta Ahmed—Office of Information and Regulatory Affairs, Office of Management and Budget, New Executive Office Building, Room 10235, 725 17th Street NW., Washington, DC 20503.

Final approval under OMB delegated authority of the extension for three years, with revision, of the following report:

Report Title: Uniform Interagency Transfer Agent Registration and Amendment Form.

OMB Control Number: 7100–0099.

Agency Form Number: Form TA–1.

Frequency: On occasion.

Reporters: State member banks (''SMBs'') and their subsidiaries, bank holding companies (''BHCs''), certain nondeposit trust company subsidiaries of BHCs, and savings and loan holding companies (''SLHCs'').

Effective Date: December 31, 2016.

Estimated Number of Respondents: Registrations: 2; amendments: 4.

Estimated Average Hours per Response: Registrations: 1.25 hours; amendments: 10 minutes.

Estimated Annual Burden Hours: 4 hours.

General Description of Report: The Securities Exchange Act of 1934 (the Act) requires any person acting as a transfer agent to register as such and to amend registration information when it changes. State member banks (SMBs) and their subsidiaries, bank holding companies (BHCs), savings and loan holding companies (SLHCs), and certain nondeposit trust company and other subsidiaries of BHCs register with the Federal Reserve System by submitting Form TA–1. The information collected is available to the public upon request and includes the company name, all business addresses, and answers to three questions about the registrant's proposed activities as a transfer agent. The Federal Reserve uses the information to act upon registration applications and to aid in performing its supervisory duties.

Current Actions: On June 10, 2016, the Board, FDIC, and OCC jointly published an initial notice in the **Federal Register** [1] requesting public comment for 60 days on the extension, with revision, of Form TA–1. The Board proposed to revise the Form TA–1 to require submission of the form to a designated Federal Reserve Board email address, as well as certain other instructional clarifications.[2] The comment period for this notice expired on August 9, 2016. The Board did not receive any comments. The revisions will be implemented as proposed.

Legal Authorization and Confidentiality: The Form TA–1 is mandatory and its collection is authorized by sections 17A(c), 17(a)(3), and 23(a)(1) of the Act, as amended (15 U.S.C. 78q–1(c), 78q(a)(3), and 78w(a)(1)). Additionally, section 3(a)(34)(B)(ii) of the Act (15 U.S.C. 78c(a)(34)(B)(ii)) provides that the Board is the appropriate regulatory agency for purposes of various filings by SMBs and their subsidiaries, BHCs, SLHCs, and certain nondepository trust company subsidiaries of BHCs that act as a clearing agency or transfer agent. The registrations are public filings and are not considered confidential.

Board of Governors of the Federal Reserve System, November 8, 2016.

Robert deV. Frierson,

Secretary of the Board.

[FR Doc. 2016–27298 Filed 11–10–16; 8:45 am]

BILLING CODE 6210–01–P

[1] See 81 FR 37665.

[2] The proposed revisions remove references to the Office of Thrift Supervision, clarify the definition of a 'qualifying security' pursuant to regulatory changes, and alter the number of Form TA–1 copies registrants are required to file with the Federal Reserve Board.

FEDERAL RESERVE SYSTEM

Change in Bank Control Notices; Acquisitions of Shares of a Bank or Bank Holding Company

The notificants listed below have applied under the Change in Bank Control Act (12 U.S.C. 1817(j)) and § 225.41 of the Board's Regulation Y (12 CFR 225.41) to acquire shares of a bank or bank holding company. The factors that are considered in acting on the notices are set forth in paragraph 7 of the Act (12 U.S.C. 1817(j)(7)).

The notices are available for immediate inspection at the Federal Reserve Bank indicated. The notices also will be available for inspection at the offices of the Board of Governors. Interested persons may express their views in writing to the Reserve Bank indicated for that notice or to the offices of the Board of Governors. Comments must be received not later than November 29, 2016.

A. Federal Reserve Bank of Minneapolis (Jacquelyn K. Brunmeier, Assistant Vice President) 90 Hennepin Avenue, Minneapolis, Minnesota 55480–0291:

1. *Michael L. Frei, Wagner,* South Dakota, individually and with power to vote the shares held in the Jill M. Frei Trust, to retain control of 25 percent or more of the shares of Commercial Holding Company, Wagner, South Dakota, and thereby indirectly control of Commercial State Bank of Wagner, Wagner, South Dakota.

Board of Governors of the Federal Reserve System, November 8, 2016.

Robert deV. Frierson,

Secretary of the Board.

[FR Doc. 2016–27292 Filed 11–10–16; 8:45 am]

BILLING CODE 6210–01–P

FEDERAL RESERVE SYSTEM

Agency Information Collection Activities: Announcement of Board Approval Under Delegated Authority and Submission to OMB

AGENCY: Board of Governors of the Federal Reserve System.

SUMMARY: Notice is hereby given of the final approval of a proposal to extend for three years, with revision, the debit card issuer survey (FR 3064a; OMB No. 7100–0344) and to extend for three years, without revision, the payment card network survey (FR 3064b; OMB No. 7100–0344) by the Board of Governors of the Federal Reserve System (Board) under OMB delegated authority, as per 5 CFR 1320.16 (OMB Regulations on Controlling Paperwork Burdens on the Public). Board-approved collections of information are incorporated into the official OMB inventory of currently approved collections of information. Copies of the Paperwork Reduction Act Submission, supporting statements and approved collection of information instrument(s) are placed into OMB's public docket files. The Federal Reserve may not conduct or sponsor, and the respondent is not required to respond to, an information collection that has been extended, revised, or implemented on or after October 1, 1995, unless it displays a currently valid OMB control number.

FOR FURTHER INFORMATION CONTACT:

Federal Reserve Board Clearance Officer —Nuha Elmaghrabi—Office of the Chief Data Officer, Board of Governors of the Federal Reserve System, Washington, DC 20551, (202) 452–3829. Telecommunications Device for the Deaf (TDD) users may contact (202) 263–4869, Board of Governors of the Federal Reserve System, Washington, DC 20551.

OMB Desk Officer—Shagufta Ahmed—Office of Information and Regulatory Affairs, Office of Management and Budget, New Executive Office Building, Room 10235, 725 17th Street NW., Washington, DC 20503.

Final approval under OMB delegated authority of the extension for three years, with revision, of the following report:

Report Title: Interchange Transaction Fees Surveys.

Agency Form Number: FR 3064a (Extended with revision) and FR 3064b (Extended without revision).

OMB Control Number: 7100–0344.

Frequency: FR 3064a—Biennial; FR 3064b—Annual.

Respondents: Issuers of debit cards (FR 3064a) and payment card networks (FR 3064b).

Estimated Annual Burden Hours: FR 3064a: 89,280 hours; FR 3064b: 1,275 hours.

Estimated Average Hours per Response: FR 3064a: 160 hours; FR 3064b: 75 hours.

Number of Respondents: FR 3064a: 558; FR 3064b: 17.

General description of report: The FR 3064a and 3064b surveys are authorized by subsection 920(a) of the Electronic Fund Transfer Act, which was amended by section 1075(a) of the Dodd-Frank Act.[1] This statutory provision requires the Federal Reserve, at least once every two years,[2] to disclose aggregate or summary information concerning the costs incurred and interchange transaction fees charged or received by issuers or payment card networks in connection with the authorization, clearance or settlement of electronic debit transaction, as the Federal Reserve considers appropriate and in the public interest.[3] It also provides the Federal Reserve with authority to require issuers and payment card networks to provide information to enable the Federal Reserve to carry out the provisions of the subsection.[4] The obligation to respond to these surveys is mandatory.

In accordance with the statutory requirement, the Federal Reserve will release aggregate or summary information from the survey responses. In addition, the Federal Reserve will release, at the network level, the percentage of total number of transactions, the percentage of total value of transactions, and the average transaction value for exempt and not-exempt issuers obtained on the FR 3064b. The Federal Reserve has determined to release this information both because it can already be determined mathematically based on the information the Federal Reserve currently releases on average interchange fees and because the Federal Reserve believes the release of such information may be useful to issuers and merchants in choosing payment card networks in which to participate and to policymakers in assessing the effect of Regulation II on the level of interchange fees received by issuers over time.

However, the remaining individual issuer and payment card information collected on these surveys can be kept confidential under exemption (b)(4) of the Freedom of Information Act (FOIA) because staff has advised that, if released, this information would cause substantial harm to the competitive position of the survey respondents.[5]

Abstract: The Wall Street Reform and Consumer Protection Act of 2010 (Dodd-Frank Act) requires the Federal Reserve to disclose, at least every two years, such aggregate or summary information concerning the costs incurred for, and interchange transaction fees received by, issuers with respect to debit card transactions, as the Federal Reserve considers appropriate or in the public interest. The data from these surveys are used in fulfilling that disclosure requirement. In addition, the Federal Reserve uses data from the payment card network survey (FR 3064b) to publicly report on an annual basis the extent to which networks have established separate interchange fees for exempt and covered issuers. Finally, the Federal Reserve uses the data from these surveys in determining whether to propose revisions to the interchange fee standards in Regulation II (12 CFR part 235). The Dodd-Frank Act provides the Federal Reserve with authority to require debit card issuers and payment card networks to submit information in order to carry out provisions of the Dodd-Frank Act regarding interchange fee standards.

Current Actions: On August 9, 2016 the Federal Reserve published a notice in the **Federal Register** (81 FR 52689) requesting public comment for 60 days on the extension, with revision, of the Interchange Transaction Fees Surveys. The comment period for this notice expired on October 11, 2016. The Federal Reserve received one joint comment letter addressing this collection, which are summarized and addressed below.

Summary Discussion of Public Comments and Recommended Responses[6]

The Federal Reserve received one joint comment letter from eight banking industry associations, which concerned the debit card issuer survey (FR 3064a). The commenters in this letter commended the Federal Reserve for proposing a full 90-day period for respondents to complete the survey, but suggested that the 90-day period commence in mid-February rather than mid-January, because respondents generally cannot begin collecting the requested data until February. The commenters suggested several changes to the online reporting tool which they argued would facilitate completion of the survey. The commenters also suggested that the survey no longer ask respondents to provide information on interchange fees repaid as a result of chargebacks and, separately, interchange fees repaid as a result of returns, but instead ask respondents to provide a single number that is interchange fees repaid as a result of chargebacks or returns. In addition, the commenters argued that the survey's definition of ''costs of authorization, clearance, and settlement'' fails to include all costs related to a debit card issuer's authorization, clearance, and settlement activities, and they recommended expanding the definition to include additional cost items. Lastly, the commenters suggested that international fraud losses be included as part of reported fraud losses.

In addition to revisions that were already suggested and were supported by the commenters, the Federal Reserve revised the debit card issuer survey to incorporate certain additional suggestions from the commenters. In particular, the Federal Reserve is commencing the survey at the beginning of February, providing a total line for interchange fees repaid as a result of chargebacks or returns, and making certain technical changes to the reporting tool for the survey. The Federal Reserve is not expanding the survey to include international fraud losses or additional cost elements.

[1] 15 U.S.C. 1693o–2.

[2] The subsection refers to biannual disclosures and the Federal Reserve interprets this to mean once every two years. *See* 76 FR 43458 (July 20, 2011).

[3] 15 U.S.C. 1693o–2(a)(3)(B).

[4] *Id.*

[5] 5 U.S.C. 552(b)(4) (exempting from disclosure ''trade secrets and commercial or financial information obtained from a person and privileged or confidential'').

[6] On August 2, 2016, the Federal Reserve Board granted initial approval of these surveys. Notice of the proposed action was published in the **Federal Register** on August 9, 2016; the comment period ended on October 11, 2016. The Federal Reserve received one comment letter addressing the proposed revisions to the FR 3064 information collection.

Detailed Discussion of Public Comments and Recommended Responses

Debit Card Issuer Survey (FR 3064a)

Section-by-Section Analysis

Section II: All Debit Card Transactions, Section III: All Single-Message (PIN) Debit Card Transactions, Section IV: All Dual-Message (Signature) Debit Card Transactions, and Section V: General-Use Prepaid Card Transactions

Question 3: Cost of authorization, clearance, and settlement—The Federal Reserve proposed to delete questions 3e and 3f which break out the fixed and variable cost components for line items *3b.1 In-house costs and 3b.2 Third-party processing fees,* respectively. The commenters strongly supported this proposal. They argued that the allocation of costs to fixed and variable components places an undue burden on respondents by forcing them to categorize costs in an artificial manner outside of respondents' standard cost accounting practices. The Federal Reserve believes that the commenters' support for this change validates the Federal Reserve's proposal to remove these items.

The commenters further believe that the definition of ''costs of authorization, clearance, and settlement'' fails to include all costs related to a debit card issuer's authorization, clearance, and settlement activities. The commenters provided a list of categories of costs that should be included and recommended that these categories be reported as individual cost items, if they are not already. Specifically, the commenters recommended expanding the definition to include the following items: costs associated with receiving, responding to, and resolving customer inquiries with respect to debit card transactions; debit card transaction compliance costs; debit card transaction non-sufficient funds handing costs; card production and delivery costs; and a portion of costs related to establishing and maintaining debit account relationships.

The Federal Reserve is keeping the set of data elements as proposed. Some of the proposed categories of costs (*e.g.,* cardholder inquiry and non-sufficient funds handling costs) are already included in the survey, and all of the proposed categories are costs that the Federal Reserve determined would not be considered as part of the interchange fee standard in Regulation II. Including these additional cost categories and requiring issuers to report at a more detailed level would not significantly enhance the Federal Reserve's understanding of the relevant costs for Regulation II and would represent a significant burden to respondents.

The commenters suggested that international fraud losses be included as part of reported fraud losses. The commenters argued that international fraud losses should be considered as part of the fraud losses associated with domestic transactions for U.S.-issued debit cards because the data compromise leading to the fraudulent debit card activity frequently occurs in the United States and generates fraudulent international transactions even if the cardholder never leaves the United States. The commenters likened this to the Federal Reserve allowing respondents to include costs from international transaction processing centers when reporting the costs associated with U.S.-issued debit cards. The commenters acknowledge that the Federal Reserve's authority to regulate debit card activity is restricted to the United States, but argued that this does not preclude the Federal Reserve from considering costs that occurred outside of the United States, if those costs could not have been incurred but for the issuance of a U.S. debit card.

International fraud losses arise from international transactions, not domestic transactions, and are therefore outside the scope of Regulation II.[7] As such, international fraud losses are analogous to ATM fraud losses, which are also not included. The commenters noted that costs incurred at international transaction processing centers are included, but that is because costs incurred at those processing centers are still associated with domestic transactions, whereas international fraud losses are not associated with domestic transactions. Thus, international fraud losses will not be reported.

Question 6: Interchange fee revenue—The commenters suggested that the survey no longer ask respondents to provide information on interchange fees repaid as a result of chargebacks and, separately, interchange fees repaid as a result of returns. The commenters argued that payment networks providing interchange fee information do not readily provide a breakdown of chargebacks and returns, such that respondents are often forced to make arbitrary allocations. The commenters suggested that the survey instead ask respondents to provide a single value consisting of interchange fees repaid as a result of chargebacks or returns.

The Federal Reserve added a line item in which respondents are asked to provide the value that commenters argue is readily available: interchange fees repaid as a result of chargebacks or returns. However, the Federal Reserve will continue to also ask respondents to provide a breakdown of this total number into interchange fees repaid as a result of chargebacks and, separately, interchange fees repaid as a result of returns. Respondents will, as always, have the option of entering ''not reported'' for those items.

General Instructions

The Federal Reserve proposed to make the survey available in mid-January, with a deadline in mid-April, thereby giving respondents a full 90 days in which to provide responses. The commenters commended the Federal Reserve for proposing a 90-day completion period, but suggested that the 90-day period begin in mid-February rather than in mid-January. The commenters noted that issuers will not have the required data to respond to the survey before mid-February; for instance, processors and networks often do not provide invoices to issuers until mid-January or later. Also, commenters argued that the necessary personnel are unavailable to begin completing the survey until other end-of-year closing activities are complete.

The Federal Reserve is making the survey available at the beginning of February instead of mid-January, and due in early May rather than mid-April, in order to address the timing concerns raised by the commenters.

The commenters also proposed three changes to the online reporting tool for the survey. First, commenters recommended that the online survey round entries to the nearest whole dollar. Second, commenters recommended that entries be right-justified. Third, commenters suggested that there be a way for respondents to consolidate all of entries, across all sections, into a single editable spreadsheet. The Federal Reserve is making all of these changes, subject to any unanticipated technical difficulties that may arise in the current interface.

Payment Card Network Survey (FR 3064b)

The Federal Reserve received no comments on the Payment Card Network survey (FR 3064b).

[7] Regulation II applies only to electronic debit transactions that are initiated at a merchant located in the United States. *See* paragraph 235.2(h)–5 of the Official Commentary on Regulation II.

Board of Governors of the Federal Reserve System, November 8, 2016.

Robert deV. Frierson,

Secretary of the Board.

[FR Doc. 2016–27299 Filed 11–10–16; 8:45 am]

BILLING CODE 6210–01–P

FEDERAL RESERVE SYSTEM

Formations of, Acquisitions by, and Mergers of Bank Holding Companies

The companies listed in this notice have applied to the Board for approval, pursuant to the Bank Holding Company Act of 1956 (12 U.S.C. 1841 *et seq.*) (BHC Act), Regulation Y (12 CFR part 225), and all other applicable statutes and regulations to become a bank holding company and/or to acquire the assets or the ownership of, control of, or the power to vote shares of a bank or bank holding company and all of the banks and nonbanking companies owned by the bank holding company, including the companies listed below.

The applications listed below, as well as other related filings required by the Board, are available for immediate inspection at the Federal Reserve Bank indicated. The applications will also be available for inspection at the offices of the Board of Governors. Interested persons may express their views in writing on the standards enumerated in the BHC Act (12 U.S.C. 1842(c)). If the proposal also involves the acquisition of a nonbanking company, the review also includes whether the acquisition of the nonbanking company complies with the standards in section 4 of the BHC Act (12 U.S.C. 1843). Unless otherwise noted, nonbanking activities will be conducted throughout the United States.

Unless otherwise noted, comments regarding each of these applications must be received at the Reserve Bank indicated or the offices of the Board of Governors not later than December 12, 2016.

A. Federal Reserve Bank of Chicago (Colette A. Fried, Assistant Vice President) 230 South LaSalle Street, Chicago, Illinois 60690–1414:

1. *United Community Bancorp, Inc.*, Chatham, Illinois; to merge with Liberty Bancshares, Inc., Alton, Illinois and thereby indirectly acquire Liberty Bank, Alton, Illinois.

B. Federal Reserve Bank of Dallas (Robert L. Triplett III, Senior Vice President) 2200 North Pearl Street, Dallas, Texas 75201–2272:

1. *BankCap Equity Fund LLC, BankCap Partners GP L.P., and BankCap Partners Fund I, L.P.*, both of Dallas, Texas; to acquire up to 24.73 percent of voting shares of Silvergate Capital Corporation, La Jolla, California through BankCap Partners Opportunity Fund, L.P., Dallas, Texas. Silvergate Capital Corporation controls Silvergate Bank, La Jolla, California.

Board of Governors of the Federal Reserve System, November 7, 2016.

Robert deV. Frierson,

Secretary of the Board.

[FR Doc. 2016–27227 Filed 11–10–16; 8:45 am]

BILLING CODE 6210–01–P

FEDERAL TRADE COMMISSION

Agency Information Collection Activities; Submission for OMB Review; Comment Request; Extension

AGENCY: Federal Trade Commission (''Commission'' or ''FTC'').

ACTION: Notice.

SUMMARY: The information collection requirements described below will be submitted to the Office of Management and Budget (''OMB'') for review, as required by the Paperwork Reduction Act (''PRA''). The FTC is seeking public comments on its proposal to extend for an additional three years the current PRA clearance for reporting requirements in its Antitrust Improvements Act Rules (''HSR Rules'') and corresponding Notification and Report Form for Certain Mergers and Acquisitions (''Notification and Report Form''). That clearance expires on December 31, 2016.

DATES: Comments must be filed by December 14, 2016.

ADDRESSES: Interested parties may file a comment online or on paper, by following the instructions in the Request for Comment part of the **SUPPLEMENTARY INFORMATION** section below. Write ''HSR PRA Clearance Extension, P169300'' on your comment and file your comment online at *https://ftcpublic.commentworks.com/ftc/hsrrulespra2,* by following the instructions on the web-based form. If you prefer to file your comment on paper, mail your comment to the following address: Federal Trade Commission, Office of the Secretary, 600 Pennsylvania Avenue NW., Suite CC–5610 (Annex J), Washington, DC 20580, or deliver your comment to the following address: Federal Trade Commission, Office of the Secretary, Constitution Center, 400 7th Street SW., 5th Floor, Suite 5610 (Annex J), Washington, DC 20024.

FOR FURTHER INFORMATION CONTACT: Robert L. Jones, Assistant Director, Premerger Notification Office, Bureau of Competition, Federal Trade Commission, Room CC–5301, 600 Pennsylvania Ave. NW., Washington, DC 20580, or by telephone to (202) 326–2740.

SUPPLEMENTARY INFORMATION: On August 12, 2016, the Commission sought comment on the reporting requirements associated with the HSR Rules and corresponding Notification and Report Form. 81 FR 53484. No relevant comments were received. Pursuant to the OMB regulations, 5 CFR part 1320, that implement the PRA, 44 U.S.C. 3501 *et seq.,* the FTC is providing this second opportunity for public comment while seeking OMB approval to renew the pre-existing clearance for those information collection requirements. For more details about the requirements of the HSR Rules, the background behind these information collection provisions, and the basis for the calculations summarized below, see 81 FR 53484.

Burden Statement

The following burden estimates are primarily based on FTC data concerning the number of HSR filings and staff's informal consultations with HSR counsel; the explanations behind them appear in the August 12, 2016 **Federal Register** Notice alluded to above. Minor revisions below to some of the prior calculations reflect the assumption that a transaction withdrawn and later refiled will entail two filings per transaction.

Estimated total annual hours: 168,486 hours.

[(4,553 non-index filings × 37 hours/each) + (10 index filings × 2 hours/each) + (1 withdrawn transaction later restarted × 5 hours))]

Estimated total annual labor cost: $77,503,560.

Estimated total annual non-labor cost: $0.

Request for Comment: You can file a comment online or on paper. For the Commission to consider your comment, we must receive it on or before December 14, 2016. Write ''HSR PRA Clearance Extension, P169300'' on your comment. Your comment—including your name and your state—will be placed on the public record of this proceeding, including to the extent practicable, on the public Commission Web site, at *http://www.ftc.gov/os/publiccomments.shtm.* As a matter of discretion, the Commission tries to remove individuals' home contact information from comments before placing them on the Commission Web site.

Because your comment will be made public, you are solely responsible for making sure that your comment does

not include any sensitive personal information, like anyone's Social Security number, date of birth, driver's license number or other state identification number or foreign country equivalent, passport number, financial account number, or credit or debit card number. You are also solely responsible for making sure that your comment does not include any sensitive health information, like medical records or other individually identifiable health information. In addition, do not include any ''[t]rade secret or any commercial or financial information which is . . . privileged or confidential'' as provided in Section 6(f) of the FTC Act 15 U.S.C. 46(f), and FTC Rule 4.10(a)(2), 16 CFR 4.10(a)(2). In particular, do not include competitively sensitive information such as costs, sales statistics, inventories, formulas, patterns devices, manufacturing processes, or customer names.

If you want the Commission to give your comment confidential treatment, you must file it in paper form, with a request for confidential treatment, and you have to follow the procedure explained in FTC Rule 4.9(c).[1] Your comment will be kept confidential only if the FTC General Counsel grants your request in accordance with the law and the public interest.

Postal mail addressed to the Commission is subject to delay due to heightened security screening. As a result, we encourage you to submit your comments online. To make sure that the Commission considers your online comment, you must file it at your comment and file your comment online at *https://ftcpublic.commentworks.com/ftc/hsrrulespra2* by following the instructions on the web-based form. When this Notice appears at *http://www.regulations.gov/#!home,* you also may file a comment through that Web site.

If you file your comment on paper, write ''HSR PRA Clearance Extension, P169300'' on your comment and on the envelope, mail your comment to the following address: Federal Trade Commission, Office of the Secretary, 600 Pennsylvania Avenue NW., Suite CC–5610 (Annex J), Washington, DC 20580, or deliver your comment to the following address: Federal Trade Commission, Office of the Secretary, Constitution Center, 400 7th Street SW., 5th Floor, Suite 5610 (Annex J), Washington, DC 20024. If possible, submit your paper comment to the Commission by courier or overnight service.

Comments on the disclosure requirements subject to review under the PRA should additionally be submitted to OMB. If sent by U.S. mail, they should be addressed to Office of Information and Regulatory Affairs, Office of Management and Budget, Attention: Desk Officer for the Federal Trade Commission, New Executive Office Building, Docket Library, Room 10102, 725 17th Street NW., Washington, DC 20503. Comments sent to OMB by U.S. postal mail, however, are subject to delays due to heightened security precautions. Thus, comments instead should be sent by facsimile to (202) 395–5806.

The FTC Act and other laws that the Commission administers permit the collection of public comments to consider and use in this proceeding as appropriate. The Commission will consider all timely and responsive public comments that it receives on or before December 14, 2016. For information on the Commission's privacy policy, including routine uses permitted by the Privacy Act, see *http://www.ftc.gov/ftc/privacy.htm.*

David C. Shonka,

Acting General Counsel.

[FR Doc. 2016–27264 Filed 11–10–16; 8:45 am]

BILLING CODE 6750–01–P

[1] In particular, the written request for confidential treatment that accompanies the comment must include the factual and legal basis for the request, and must identify the specific portions of the comment to be withheld from the public record. *See* FTC Rule 4.9(c), 16 CFR 4.9(c).

DEPARTMENT OF HEALTH AND HUMAN SERVICES

Centers for Disease Control and Prevention

[60Day–17–17BM; Docket No. CDC–2016–0102]

Proposed Data Collection Submitted for Public Comment and Recommendations

AGENCY: Centers for Disease Control and Prevention (CDC), Department of Health and Human Services (HHS).

ACTION: Notice with comment period.

SUMMARY: The Centers for Disease Control and Prevention (CDC), as part of its continuing efforts to reduce public burden and maximize the utility of government information, invites the general public and other Federal agencies to take this opportunity to comment on proposed and/or continuing information collections, as required by the Paperwork Reduction Act of 1995. This notice invites comment on Measuring Worker Well-being for Total Worker Health®. This project will provide a tool to measure worker well-being across a range of important domains. Measuring worker well-being is an important initial step towards improving workplace policies, programs, and practices to promote safety and health and prevent disease for employees.

DATES: Written comments must be received on or before January 13, 2017.

ADDRESSES: You may submit comments, identified by Docket No. CDC–2016–0102 by any of the following methods:

- *Federal eRulemaking Portal: Regulations.gov*. Follow the instructions for submitting comments.
- *Mail:* Leroy A. Richardson, Information Collection Review Office, Centers for Disease Control and Prevention, 1600 Clifton Road NE., MS–D74, Atlanta, Georgia 30329.

Instructions: All submissions received must include the agency name and Docket Number. All relevant comments received will be posted without change to *Regulations.gov*, including any personal information provided. For access to the docket to read background documents or comments received, go to *Regulations.gov*.

Please note: All public comment should be submitted through the Federal eRulemaking portal (*Regulations.gov*) or by U.S. mail to the address listed above.

FOR FURTHER INFORMATION CONTACT: To request more information on the proposed project or to obtain a copy of the information collection plan and instruments, contact the Information Collection Review Office, Centers for Disease Control and Prevention, 1600 Clifton Road NE., MS–D74, Atlanta, Georgia 30329; phone: 404–639–7570; Email: *omb@cdc.gov.*

SUPPLEMENTARY INFORMATION: Under the Paperwork Reduction Act of 1995 (PRA) (44 U.S.C. 3501–3520), Federal agencies must obtain approval from the Office of Management and Budget (OMB) for each collection of information they conduct or sponsor. In addition, the PRA also requires Federal agencies to provide a 60-day notice in the **Federal Register** concerning each proposed collection of information, including each new proposed collection, each proposed extension of existing collection of information, and each reinstatement of previously approved information collection before submitting the collection to OMB for approval. To comply with this requirement, we are publishing this notice of a proposed data collection as described below.

Comments are invited on: (a) Whether the proposed collection of information is necessary for the proper performance

of the functions of the agency, including whether the information shall have practical utility; (b) the accuracy of the agency's estimate of the burden of the proposed collection of information; (c) ways to enhance the quality, utility, and clarity of the information to be collected; (d) ways to minimize the burden of the collection of information on respondents, including through the use of automated collection techniques or other forms of information technology; and (e) estimates of capital or start-up costs and costs of operation, maintenance, and purchase of services to provide information.

Burden means the total time, effort, or financial resources expended by persons to generate, maintain, retain, disclose or provide information to or for a Federal agency. This includes the time needed to review instructions; to develop, acquire, install and utilize technology and systems for the purpose of collecting, validating and verifying information, processing and maintaining information, and disclosing and providing information; to train personnel and to be able to respond to a collection of information, to search data sources, to complete and review the collection of information; and to transmit or otherwise disclose the information.

Proposed Project

Measuring Worker Well-being for Total Worker Health—New—National Institute for Occupational Safety and Health (NIOSH)—Centers for Disease Control and Prevention (CDC).

Background and Brief Description

As described in the Occupational Safety and Health Act of 1970 (PL 91–596), the mission of NIOSH is to conduct research and investigations on work-related disease and injury and to disseminate information for preventing identified workplace hazards (Sections 20 (a) (1) and (d), Attachment 1). NIOSH is requesting a one-year approval for this data collection.

Measuring worker well-being is the first step towards improving workplace policies, programs, and practices to promote prevention of disease and injury.

The Total Worker Health® Program within NIOSH has made worker well-being a key aspect of its mission. The Total Worker Health (TWH) Program encompasses policies, programs, and practices that integrate protection from work-related safety and health hazards with promotion of injury and illness prevention efforts to advance worker well-being. The goal of TWH is not only to prevent disease or injury, but also to promote a culture of safety and health and an enhancement of overall well-being.

In order to promote and enhance worker well-being it is first necessary to develop and validate instruments aimed at measuring the concept. This study is intended to generate data that can be used to validate a worker well-being survey instrument through testing of its psychometric properties. The survey includes questions on five domains of worker well-being including: worker evaluation and experiences with work; workplace physical environment and safety climate; organizational policies and culture; worker health status; and experiences outside of work (external context).

For this study, the survey instrument will be programmed into a web-based survey that will be administered online to an existing nationwide survey panel of employed adults (KnowledgePanel®) hosted by our vendor, GfK. De-identified data will be transmitted securely to RAND, and RAND researchers will analyze the data as a CDC contractor.

The survey will be fielded to approximately 1,025 respondents in the GFK panel, and the expected burden per respondent for reading the email and completing the survey is 15 minutes or 0.25 hours of their time. This will be a one-time survey and panelists will not be asked to respond to this survey again in the future. The total estimated burden hours are 385 for reading the recruitment email and responding to the survey. There are no costs to the respondent other than their time.

ESTIMATED ANNUALIZED BURDEN HOURS

Respondents	Form name	Number of respondents	Number of responses per respondent	Average burden per response (in hrs.)	Total burden (in hrs.)
GFK Panelists	Recruitment email	1,540	1	5/60	128
GFK Panelists	Worker Well-being survey	1,025	1	15/60	257
Total					385

Leroy A. Richardson,

Chief, Information Collection Review Office, Office of Scientific Integrity, Office of the Associate Director for Science, Office of the Director, Centers for Disease Control and Prevention.

[FR Doc. 2016–27261 Filed 11–10–16; 8:45 am]

BILLING CODE 4163–18–P

DEPARTMENT OF HEALTH AND HUMAN SERVICES

Centers for Medicare & Medicaid Services

[CMS–9099–N]

Medicare and Medicaid Programs; Quarterly Listing of Program Issuances—July Through September 2016

AGENCY: Centers for Medicare & Medicaid Services (CMS), HHS.

ACTION: Notice.

SUMMARY: This quarterly notice lists CMS manual instructions, substantive and interpretive regulations, and other **Federal Register** notices that were published from July through September 2016, relating to the Medicare and Medicaid programs and other programs administered by CMS.

FOR FURTHER INFORMATION CONTACT: It is possible that an interested party may need specific information and not be able to determine from the listed information whether the issuance or regulation would fulfill that need. Consequently, we are providing contact persons to answer general questions concerning each of the addenda published in this notice.

Addenda	Contact	Phone number
I CMS Manual Instructions	Ismael Torres	(410) 786–1864
II Regulation Documents Published in the **Federal Register**	Terri Plumb	(410) 786–4481
III CMS Rulings	Tiffany Lafferty	(410) 786–7548
IV Medicare National Coverage Determinations	Wanda Belle, MPA	(410) 786–7491
V FDA-Approved Category B IDEs	John Manlove	(410) 786–6877
VI Collections of Information	William Parham	(410) 786–4669
VII Medicare-Approved Carotid Stent Facilities	Sarah Fulton, MHS	(410) 786–2749
VIII American College of Cardiology-National Cardiovascular Data Registry Sites	Sarah Fulton, MHS	(410) 786–2749
IX Medicare's Active Coverage-Related Guidance Documents	JoAnna Baldwin, MS	(410) 786–7205
X One-time Notices Regarding National Coverage Provisions	JoAnna Baldwin, MS	(410) 786–7205
XI National Oncologic Positron Emission Tomography Registry Sites	Stuart Caplan, RN, MAS	(410) 786–8564
XII Medicare-Approved Ventricular Assist Device (Destination Therapy) Facilities	Linda Gousis, JD	(410) 786–8616
XIII Medicare-Approved Lung Volume Reduction Surgery Facilities	Sarah Fulton, MHS	(410) 786–2749
XIV Medicare-Approved Bariatric Surgery Facilities	Sarah Fulton, MHS	(410) 786–2749
XV Fluorodeoxyglucose Positron Emission Tomography for Dementia Trials	Stuart Caplan, RN, MAS	(410) 786–8564
All Other Information	Annette Brewer	(410) 786–6580

I. Background

The Centers for Medicare & Medicaid Services (CMS) is responsible for administering the Medicare and Medicaid programs and coordination and oversight of private health insurance. Administration and oversight of these programs involves the following: (1) Furnishing information to Medicare and Medicaid beneficiaries, health care providers, and the public; and (2) maintaining effective communications with CMS regional offices, state governments, state Medicaid agencies, state survey agencies, various providers of health care, all Medicare contractors that process claims and pay bills, National Association of Insurance Commissioners (NAIC), health insurers, and other stakeholders. To implement the various statutes on which the programs are based, we issue regulations under the authority granted to the Secretary of the Department of Health and Human Services under sections 1102, 1871, 1902, and related provisions of the Social Security Act (the Act) and Public Health Service Act. We also issue various manuals, memoranda, and statements necessary to administer and oversee the programs efficiently.

Section 1871(c) of the Act requires that we publish a list of all Medicare manual instructions, interpretive rules, statements of policy, and guidelines of general applicability not issued as regulations at least every 3 months in the **Federal Register**.

II. Format for the Quarterly Issuance Notices

This quarterly notice provides only the specific updates that have occurred in the 3-month period along with a hyperlink to the full listing that is available on the CMS Web site or the appropriate data registries that are used as our resources. This is the most current up-to-date information and will be available earlier than we publish our quarterly notice. We believe the Web site list provides more timely access for beneficiaries, providers, and suppliers. We also believe the Web site offers a more convenient tool for the public to find the full list of qualified providers for these specific services and offers more flexibility and ''real time'' accessibility. In addition, many of the Web sites have listservs; that is, the public can subscribe and receive immediate notification of any updates to the Web site. These listservs avoid the need to check the Web site, as notification of updates is automatic and sent to the subscriber as they occur. If assessing a Web site proves to be difficult, the contact person listed can provide information.

III. How To Use the Notice

This notice is organized into 15 addenda so that a reader may access the subjects published during the quarter covered by the notice to determine whether any are of particular interest. We expect this notice to be used in concert with previously published notices. Those unfamiliar with a description of our Medicare manuals should view the manuals at *http://www.cms.gov/manuals.*

Dated: November 7, 2016.

Kathleen Cantwell,

Director, Office of Strategic Operations and Regulatory Affairs.

BILLING CODE 4120–01–P

Publication Dates for the Previous Four Quarterly Notices

We publish this notice at the end of each quarter reflecting information released by CMS during the previous quarter. The publication dates of the previous four Quarterly Listing of Program Issuances notices are: November 13, 2015 (80 FR 70218), February 4, 2016 (81 FR 6009), May 9, 2016 (81 FR 28072) and August 5, 2016 (81 FR 51901). We are providing only the specific updates that have occurred in the 3-month period along with a hyperlink to the website to access this information and a contact person for questions or additional information.

Addendum I: Medicare and Medicaid Manual Instructions (July through September 2016)

The CMS Manual System is used by CMS program components, partners, providers, contractors, Medicare Advantage organizations, and State Survey Agencies to administer CMS programs. It offers day-to-day operating instructions, policies, and procedures based on statutes and regulations, guidelines, models, and directives. In 2003, we transformed the CMS Program Manuals into a web user-friendly presentation and renamed it the CMS Online Manual System.

How to Obtain Manuals

The Internet-only Manuals (IOMs) are a replica of the Agency's official record copy. Paper-based manuals are CMS manuals that were officially released in hardcopy. The majority of these manuals were transferred into the Internet-only manual (IOM) or retired. Pub 15-1, Pub 15-2 and Pub 45 are exceptions to this rule and are still active paper-based manuals. The remaining paper-based manuals are for reference purposes only. If you notice policy contained in the paper-based manuals that was not transferred to the IOM, send a message via the CMS Feedback tool.

Those wishing to subscribe to old versions of CMS manuals should contact the National Technical Information Service, Department of Commerce, 5301 Shawnee Road, Alexandria, VA 22312 Telephone (703-605-6050). You can download copies of the listed material free of charge at: http://cms.gov/manuals.

How to Review Transmittals or Program Memoranda

Those wishing to review transmittals and program memoranda can access this information at a local Federal Depository Library (FDL). Under the FDL program, government publications are sent to approximately 1,400 designated libraries throughout the United States. Some FDLs may have arrangements to transfer material to a local library not designated as an FDL. Contact any library to locate the nearest FDL. This information is available at http://www.gpo.gov/libraries/

In addition, individuals may contact regional depository libraries that receive and retain at least one copy of most federal government publications, either in printed or microfilm form, for use by the general public. These libraries provide reference services and interlibrary loans; however, they are not sales outlets. Individuals may obtain information about the location of the nearest regional depository library from any library. CMS publication and transmittal numbers are shown in the listing entitled Medicare and Medicaid Manual Instructions. To help FDLs locate the materials, use the CMS publication and transmittal numbers. For example, to find the manual for Medicare Internet Only Manual Publication Quarterly Update to the Correct Coding Initiative (CCI) Edits, Version 22.3, Effective October 1, 2016 use (CMS-Pub. 100-04) Transmittal No. 3561.

Addendum I lists a unique CMS transmittal number for each instruction in our manuals or program memoranda and its subject number. A transmittal may consist of a single or multiple instruction(s). Often, it is necessary to use information in a transmittal in conjunction with information currently in the manual. For the purposes of this quarterly notice, we list only the specific updates to the list of manual instructions that have occurred in the 3-month period. This information is available on our website at www.cms.gov/Manuals.

Transmittal Number	Manual/Subject/Publication Number
	Medicare General Information (CMS-Pub. 100-01)
100	Medicare Fee-for-Service Change Request Correction and Rescind Process Change Management Process (Electronic Change Information Management Portal
101	Internet Only Manual Updates to Pub. 100-01, 100-02 and 100-04 to Correct Errors and Omissions (SNF) Certification and Recertification by Physicians for Extended Care Services Admission of Medicare Patients for Care and Treatment
	Medicare Benefit Policy (CMS-Pub. 100-02)
225	Ambulance Staffing Requirements Vehicle Requirements for Basic Life Support and Advanced Life Support Definition of Ambulance Services Ground Ambulance Services
226	Ambulance Staffing Requirements Vehicle Requirements for Basic Life Support and Advanced Life Support Definition of Ambulance Services
227	Internet Only Manual Updates to Pub. 100-01, 100-02 and 100-04 to Correct Errors and Omissions (SNF Requirements - General

	Medicare SNF PPS Overview Medicare SNF Coverage Guidelines Under PPS Hospital Providers of Extended Care Services Prior Hospitalization and Transfer Requirements Three-Day Prior Hospitalization Three-Day Prior Hospitalization - Foreign Hospital Effect on Spell of Illness Medical Service of an Intern or Resident-in-Training Medical and Other Health Services Furnished to SNF Patients Services Furnished Under Arrangements With Providers Definition of Durable Medical Equipment
Medicare National Coverage Determination (CMS-Pub. 100-03)	
	None
Medicare Claims Processing (CMS-Pub. 100-04)	
3556	Stem Cell Transplantation for Multiple Myeloma, Myelofibrosis, Sickle Cell Disease, and Myelodysplastic Syndromes Stem Cell Transplantation Billing for Stem Cell Transplantation Billing for Autologous Stem Cell Transplants Billing for Allogeneic Stem Cell Transplants Stem Cell Transplantation
3557	July 2016 Update of the Hospital Outpatient Prospective Payment System (OPPS)
3558	Implement Operating Rules - Phase III ERA EFT: CORE 360 Uniform Use of Claim Adjustment Reason Codes (CARC), Remittance Advice Remark Codes (RARC) and Claim Adjustment Group Code (CAGC) Rule - Update from CAQH CORE
3559	Update to Hospice Payment Rates, Hospice Cap, Hospice Wage Index and Hospice Pricer for FY 2017
3560	Correction of Remark Code Information Preparation of Denial Notices Processing Initial Denial
3561	Quarterly Update to the Correct Coding Initiative (CCI) Edits, Version 22.3, Effective October 1, 2016
3562	Remittance Advice Remark Code (RARC), Claims Adjustment Reason Code (CARC), Medicare Remit Easy Print (MREP) and PC Print Update
3563	New Waived Tests
3564	Issued to a specific audience, not posted to Internet/Intranet due to Confidentiality of Instruction
3565	Durable Medical Equipment, Prosthetics, Orthotics and Supplies (DMEPOS) Competitive Bidding Program (CBP): Additional Instructions for the Implementation of Round 2 Recompete of the DMEPOS CBP and National Mail Order (NMO) Recompete Payment of a Part of a DMEPOS Item Payment for Capped Rental Items Items Payment for Repair and Replacement of Beneficiary-Owned Equipment
3566	Issued to a specific audience, not posted to Internet/Intranet due to Confidentiality of Instruction
3567	Issued to a specific audience, not posted to Internet/Intranet due to Confidentiality of Instruction
3568	Reopenings Update - Changes to Chapter 34 Reopenings and Revisions of Claim Determinations and Decisions – General Authority to Conduct a Reopening Reopenings Based on Clerical or Minor Errors and Omissions Telephone Reopenings - Required for A/B MACs (B) Only Informing the Provider Communities About the Telephone Reopenings Process Conducting the Telephone Reopening Monitoring the Telephone Reopening Timeframes to Reopen Claim Determinations Timeframes for Contractor Initiated Reopenings Timeframes for Party Requested Reopenings Timeframes for Adjudicator to Reopen Timeframes When a Party Requests an Adjudicator Reopen Their Decision Good Cause for Reopening Change in Substantive Law or Interpretative Policy
3569	Issued to a specific audience, not posted to Internet/Intranet due to Confidentiality of Instruction
3570	Issued to a specific audience, not posted to Internet/Intranet due to Confidentiality of Instruction
3571	Issued to a specific audience, not posted to Internet/Intranet due to Sensitivity of Instruction
3572	Issued to a specific audience, not posted to Internet/Intranet due to Confidentiality of Instruction
3573	October 2016 Quarterly Average Sales Price (ASP) Medicare Part B Drug Pricing Files and Revisions to Prior Quarterly Pricing Files
3574	Issued to a specific audience, not posted to Internet/Intranet due to Confidentiality of Instruction
3575	Update-Inpatient Psychiatric Facilities Prospective Payment System (IPF PPS) Fiscal Year (FY) 2016 Annual Update Electroconvulsive Therapy (ECT) Payment
3576	Inpatient Rehabilitation Facility (IRF) Annual Update: Prospective Payment System (PPS) Pricer Changes for FY 2017
3577	Issued to a specific audience, not posted to Internet/Intranet due to Confidentiality of Instruction
3578	Multiple Procedure Payment Reduction (MPPR) on the Professional Component (PC) of Certain Diagnostic Imaging Procedures
3579	Issued to a specific audience, not posted to Internet/Intranet due to Confidentiality of Instruction
3580	Issued to a specific audience, not posted to Internet/Intranet due to Confidentiality of Instruction
3581	Issued to a specific audience, not posted to Internet/Intranet due to Confidentiality of Instruction
3582	Issued to a specific audience, not posted to Internet/Intranet due to Sensitivity Instruction
3583	Issued to a specific audience, not posted to Internet/Intranet due to Sensitivity Instruction

3584	Issued to a specific audience, not posted to Internet/Intranet due to Confidentiality of Instruction
3585	Issued to a specific audience, not posted to Internet/Intranet due to Sensitivity Instruction
3586	Issued to a specific audience, not posted to Internet/Intranet due to Sensitivity Instruction
3587	Issued to a specific audience, not posted to Internet/Intranet due to Confidentiality of Instruction
3588	Issued to a specific audience, not posted to Internet/Intranet due to Confidentiality of Instruction
3589	Issued to a specific audience, not posted to Internet/Intranet due to Confidentiality of Instruction
3590	Changes to the Fiscal Intermediary Shared System (FISS) Inpatient Provider Specific File (PSF) for Low-Volume Hospital Payment Adjustment Factor and New Inpatient Prospective Payment System (IPPS) Pricer Output Field for Islet Isolation Add-on Payment
3591	October 2016 Integrated Outpatient Code Editor (I/OCE) Specifications Version 17.3
3592	Issued to a specific audience, not posted to Internet/Intranet due to Confidentiality of Instruction
3593	Durable Medical Equipment, Prosthetics, Orthotics and Supplies (DMEPOS) Competitive Bidding Program (CBP): Additional Instructions for the Implementation of Round 2 Recompete of the DMEPOS CBP and National Mail Order (NMO) Recompete
3594	Quarterly Update to the Medicare Physician Fee Schedule Database (MPFSDB) - October CY 2016 Update
3595	Quarterly Update to the Medicare Physician Fee Schedule Database (MPFSDB) - October CY 2016 Update
3596	Issued to a specific audience, not posted to Internet/Intranet due to Sensitivity Instruction
3597	Healthcare Provider Taxonomy Codes (HPTCs) October 2016 Code Set Update
3598	October Quarterly Update for 2016 Durable Medical Equipment, Prosthetics, Orthotics, and Supplies (DMEPOS) Fee Schedule
3599	Claim Status Category and Claim Status Codes Update
3600	Implement Operating Rules - Phase III Electronic Remittance Advice ERA) Electronic Funds Transfer (EFT): CORE 360 Uniform Use of Claim Adjustment Reason Codes (CARC), Remittance Advice Remark Codes (RARC) and Claim Adjustment Group Code (CAGC) Rule - Update from Council for Affordable Quality Healthcare (CAQH) Committee on Operating Rules for Information Exchange (CORE)
3601	October 2016 Update of the Ambulatory Surgical Center (ASC) Payment System
3602	October 2016 Update of the Hospital Outpatient Prospective Payment System (OPPS)
3603	2017 Annual Update of Healthcare Common Procedure Coding System (HCPCS) Codes for Skilled Nursing Facility (SNF) Consolidated Billing (CB) Update Payer Only Codes Utilized by Medicare
3604	Common Edits and Enhancements Modules (CEM) Code Set Update
3605	Instructions for Downloading the Medicare ZIP Code File for January 2017
3606	2017 Healthcare Common Procedure Coding System (HCPCS) Annual Update Reminder
3607	Annual Clotting Factor Furnishing Fee Update 2017 Clotting Factor Furnishing Fee
3608	Issued to a specific audience, not posted to Internet/Intranet due to Confidentiality of Instruction
3609	Annual Medicare Physician Fee Schedule (MPFS) Files Delivery and Implementation
3610	2017 Annual Update for the Health Professional Shortage Area (HPSA) Bonus Payments
3611	Influenza Vaccine Payment Allowances - Annual Update for 2016-2017 Season
3612	Internet Only Manual Updates to Pub. 100-01, 100-02 and 100-04 to Correct Errors and Omissions (SNF) Furnishing Services that are Subject to SNF Consolidated Billing Under an "Arrangement" With an Outside Entity Under Arrangements" Relationships Physician's Services and Other Professional Services Excluded From Part A PPS Payment and the Consolidated Billing Requirement Other Excluded Services Beyond the Scope of a SNF Part A Benefit Outpatient Surgery and Related Procedures - INCLUSION Decision Logic Used by the Pricer on Claims
3613	Issued to a specific audience, not posted to Internet/Intranet due to Sensitivity Instruction
3614	Changes to the Laboratory National Coverage Determination (NCD) Edit Software for January 2017
3615	Update to Hepatitis B Deductible and Coinsurance and Screening Pap Smears Claims Processing Information Pneumococcal Pneumonia, Influenza Virus, and Hepatitis B Vaccines MSN Messages Remittance Advice Codes
3616	Issued to a specific audience, not posted to Internet/Intranet due to Sensitivity Instruction
3617	Implementation of New Influenza Virus Vaccine Code Table of Preventive and Screening Services Healthcare Common Procedure Coding System (HCPCS) and Diagnosis Codes CWF Edits on A/B MAC (A) Claims CWF Edits on A/B MAC (B) Claims CWF Crossover Edits on A/B MAC (B) Claims
Medicare Secondary Payer (CMS-Pub. 100-05)	
	None
Medicare Financial Management (CMS-Pub. 100-06)	
270	Notice of New Interest Rate for Medicare Overpayments and Underpayments –4th Qtr Notification for FY 2016
271	Issued to a specific audience, not posted to Internet/Intranet due to Confidentiality of Instruction
272	Issued to a specific audience, not posted to Internet/Intranet due to

	Confidentiality of Instruction
Medicare State Operations Manual (CMS-Pub. 100-07)	
157	Revisions to the State Operations Manual (SOM) - Appendix PP – Guidance to Surveyors for Long Term Care Facilities
158	Revisions to the State Operations Manual (SOM) –Chapter 5 Survey Exit Conference and Report to the Provider/Supplier Task 7: Exit Conference Revisions to State Operations Manual (SOM) Appendix J, Part II – Interpretive Guidelines – Responsibilities of Intermediate Care Facilities for Individuals with Intellectual Disabilities and Exhibit 355, Probes and Procedures for Appendix J
159	Revisions to the State Operations Manual (SOM), Appendix I – Survey Procedures for Life Safety Code Surveys
160	Revisions to the State Operations Manual (SOM) Chapter 7
161	Revisions to the State Operations Manual (SOM) Chapter 7 Mandatory Immediate Imposition of Federal Remedies Criteria for Mandatory Immediate Imposition of Federal Remedies Effective Dates for Immediate Imposition of Federal Remedies Prior to the Facility's Correction of Deficiencies Responsibilities of the State Survey Agency and the CMS Regional Office when there is an Immediate Imposition of Federal Remedies Imposition of a Civil Money Penalty when a Facility is not allowed an Opportunity to Correct Enforcement Action That Must Be Taken 2 Facilities Given an Opportunity to Correct Deficiencies prior to the Immediate Imposition of Federal Remedies Factors That Must Be Considered When Selecting Remedies Category 2
Medicare Program Integrity (CMS-Pub. 100-08)	
663	Denial Codes for Missing or Insufficient Documentation No Response or Insufficient Response to Additional Documentation Reopening Claims with Additional Information or Denied Due to Late or No Submission of Requested Information Notifying the Provider Prepay Complex Provider Specific Review Prepay Complex Service Specific Review Postpay Complex Provider Specific Review Postpay Complex Service Specific Review
664	The Process of Prior Authorization Prior Authorization Prior Authorization of Certain Durable Medical Equipment, Prosthetics, Orthotics, and Suppliers (DMEPOS)
665	Issued to a specific audience, not posted to Internet/Intranet due to Confidentiality of Instruction
666	Issued to a specific audience, not posted to Internet/Intranet due to Confidentiality of Instruction
667	Revisions to Instructions Regarding the Fraud Investigation Database (FID) and Other Program Integrity Procedures
668	Issued to a specific audience, not posted to Internet/Intranet due to Confidentiality of Instruction
669	Issued to a specific audience, not posted to Internet/Intranet due to Confidentiality of Instruction
670	Update of Payment Suspension Instructions
671	Issued to a specific audience, not posted to Internet/Intranet due to Confidentiality of Instruction
672	Documentation for Durable Medical Equipment Prosthetics, Orthotics and Supplies (DMEPOS) Claims for Replacement of Essential Accessories for Beneficiary-Owned Continuous Positive Airway Pressure (CPAP) Devices and Respiratory Assist Devices (RADs)
673	Issued to a specific audience, not posted to Internet/Intranet due to Confidentiality of Instruction
674	Duplicate Postpayment Claim Reviews Case Selection
675	Update to Chapter 4, Pub. 100-08
676	Clarification of Certain Policies in Pub. 100-08, Chapter 15 Regarding the Processing of Form CMS-855R Applications
677	Issued to a specific audience, not posted to Internet/Intranet due to Confidentiality of Instruction
Medicare Contractor Beneficiary and Provider Communications (CMS-Pub. 100-09)	
26	QIO Manual Chapter 2 - Eligibility
Medicare Quality Improvement Organization (CMS- Pub. 100-10)	
	None
Medicare End Stage Renal Disease Network Organizations (CMS Pub 100-14)	
	None
Medicaid Program Integrity Disease Network Organizations (CMS Pub 100-15)	
	None
Medicare Managed Care (CMS-Pub. 100-16)	
123	QIO Manual Chapter 2 - Eligibility
Medicare Business Partners Systems Security (CMS-Pub. 100-17)	
	None
Demonstrations (CMS-Pub. 100-19)	
151	Shared System Enhancement 2015 Archive/Remove Inactive Medicare Demonstration Projects
152	Shared System Enhancement 2015 Archive/Remove Inactive Medicare Demonstration Projects
153	Issued to a specific audience, not posted to Internet/ Intranet due to Sensitivity Instruction
154	Issued to a specific audience, not posted to Internet/ Intranet due to Sensitivity Instruction
155	Issued to a specific audience, not posted to Internet/ Intranet due to Sensitivity Instruction
156	Affordable Care Act Bundled Payments for Care Improvement Initiative – Recurring File Updates Models 2 and 4 January 2017 Updates
One Time Notification (CMS-Pub. 100-20)	
1679	Shared Savings Program (SSP) Accountable Care Organization (ACO) Qualifying Stay Edits
1680	Issued to a specific audience, not posted to Internet/ Intranet to Sensitivity of Instruction
1681	The Supplemental Security Income (SSI)/Medicare Beneficiary Data for Fiscal Year 2014 for Inpatient Prospective Payment System (IPPS) Hospitals, Inpatient Rehabilitation Facilities (IRFs), and Long Term Care Hospitals (LTCH)

1682	Issued to a specific audience, not posted to Internet/ Intranet to Sensitivity of Instruction
1683	Shared Savings Program (SSP) Accountable Care Organization (ACO) Qualifying Stay Edits
1684	Issued to a specific audience, not posted to Internet/Intranet due to Sensitivity of Instruction
1685	Update the Primary Insurer's Policy Number of the Insured Field to 17 Bytes on the Health Insurance Master Record (HIMR) Screen Found in the Medicare Secondary Payer (MSP) Auxiliary File.
1686	Part B Detail Line Expansion – MCS Phase 7
1687	Common Working File (CWF) to Locate Medicare Beneficiary Record and Provide Responses to Provider Queries
1688	Part B Detail Line Expansion – MCS Phase 2
1689	Update Common Working File (CWF) Editing to Not Allow Late Charge Billing by Prospective Payment System (PPS) Providers
1690	Issued to a specific audience, not posted to Internet/Intranet due to Sensitivity of Instruction
1691	Issued to a specific audience, not posted to Internet/Intranet due to Sensitivity of Instruction
1692	Remove Part B Batch Eligibility Process (HELG) from the Common Working File (CWF)1693
1693	Common Working File (CWF) to Remove Remaining Federal Tax Information (FTI) Received through the Internal Revenue Service (IRS), Social Security Administration (SSA), Centers for Medicare and Medicaid Services (CMS) Medicare Secondary Payer (MSP) Data Match Program from CWF.
1694	Issued to a specific audience, not posted to Internet/Intranet due to Sensitivity of Instruction
1695	Fiscal Intermediary Shared System (FISS) Heath Information Technology for Economic and Clinical Health (HITECH) Quarterly Report
1696	Shared System Enhancement 2014 - Additional Removal of Obsolete Reports and On-Request Jobs from the ViPS Medicare System (VMS) – Implementation
1697	Reporting of All Recovery Auditor-Initiated Claim Adjustments and their Subsequent Adjustments for Periodic Interim Payment (PIP) Facilities
1698	Editing Update for Screening for Sexually Transmitted Infections
1699	Appropriate Use Criteria for Advanced Imaging – Analysis and Design
1700	Issued to a specific audience, not posted to Internet/Intranet due to Sensitivity of Instruction
1701	Combined Common Edits/Enhancements (CCEM) Third Party Software Upgrades
1702	Section 504: Adding a Qualified Reader Preference in Alternate Formats
1703	Recovery Auditor Mass Adjustment and Reporting Process Enhancements – Analysis Only
1704	Issued to a specific audience, not posted to Internet/Intranet due to Sensitivity of Instruction
1705	Issued to a specific audience, not posted to Internet/Intranet due to Sensitivity of Instruction
1706	Health Insurance Portability and Accountability Act (HIPAA) Electronic Data Interchange (EDI) Front End Updates for January 2017
1707	eMSN and Alternate Format MSN Service Improvements
1708	Coding Revisions to National Coverage Determination (NCDs)
1709	Issued to a specific audience, not posted to Internet/Intranet due to Sensitivity of Instruction
1710	Adding a Foreign Language Tagline Sheet to Medicare Summary Notices (MSNs)
1711	Medicare Appeals System (MAS) Level 1 Part A and Home, Heath, Hospice (HHH) Onboarding Effort
1712	Shared System Enhancement 2014 – Identification of Fiscal Standard System (FISS) Obsolete Reports - Analysis Only
1713	Editing Update for Screening for Sexually Transmitted Infections
1714	Shared System Enhancement 2014 – Identification of Fiscal Intermediary Standard System (FISS) Obsolete Reports - Analysis Only
1715	Updates to the 72X Type of Bill for Home and Self-Dialysis Training, Retraining, and Nocturnal Hemodialysis
1716	Affordable Care Act - Operating Rules - Requirements for Phase II and Phase III Compliance for Batch Processing
1717	Section 504: Adding a Qualified Reader Preference in Alternate Formats
1718	Common Working File (CWF) to Remove Remaining Federal Tax Information (FTI) Received through the Internal Revenue Service (IRS), Social Security Administration (SSA), Centers for Medicare and Medicaid Services (CMS) Medicare Secondary Payer (MSP) Data Match Program from CWF.
1719	Issued to a specific audience, not posted to Internet/Intranet due to Sensitivity of Instruction
1720	Reporting of All Recovery Auditor-Initiated Claim Adjustments and their Subsequent Adjustments for Periodic Interim Payment (PIP) Facilities
1721	Adding a Foreign Language Tagline Sheet to Medicare Summary Notices (MSNs)
1722	Updating the Fiscal Intermediary Shared System (FISS) to Make Payment for Drugs and Biologicals Services for Outpatient Prospective Payment System (OPPS) Providers
Medicare Quality Reporting Incentive Programs (CMS- Pub. 100-22)	
58	Issued to a specific audience, not posted to Internet/Intranet due to Confidentiality of Instruction
59	Issued to a specific audience, not posted to Internet/Intranet due to Confidentiality of Instruction
Information Security Acceptable Risk Safeguards (CMS-Pub. 100-25)	
	None

Addendum II: Regulation Documents Published in the Federal Register (July through September 2016)

Regulations and Notices

Regulations and notices are published in the daily **Federal Register**. To purchase individual copies or subscribe to the **Federal Register,** contact GPO at www.gpo.gov/fdsys. When ordering individual

copies, it is necessary to cite either the date of publication or the volume number and page number.

The **Federal Register** is available as an online database through GPO Access. The online database is updated by 6 a.m. each day the **Federal Register** is published. The database includes both text and graphics from Volume 59, Number 1 (January 2, 1994) through the present date and can be accessed at http://www.gpoaccess.gov/fr/index.html. The following website http://www.archives.gov/federal-register/ provides information on how to access electronic editions, printed editions, and reference copies.

This information is available on our website at: http://www.cms.gov/quarterlyproviderupdates/downloads/Regs-3Q16QPU.pdf

For questions or additional information, contact Terri Plumb (410-786-4481).

Addendum III: CMS Rulings (July through September 2016)

CMS Rulings are decisions of the Administrator that serve as precedent final opinions and orders and statements of policy and interpretation. They provide clarification and interpretation of complex or ambiguous provisions of the law or regulations relating to Medicare, Medicaid, Utilization and Quality Control Peer Review, private health insurance, and related matters.

The rulings can be accessed at http://www.cms.gov/Regulations-and-Guidance/Guidance/Rulings. For questions or additional information, contact Tiffany Lafferty (410-786-7548).

Addendum IV: Medicare National Coverage Determinations (July through September 2016)

Addendum IV includes completed national coverage determinations (NCDs), or reconsiderations of completed NCDs, from the quarter covered by this notice. Completed decisions are identified by the section of the NCD Manual (NCDM) in which the decision appears, the title, the date the publication was issued, and the effective date of the decision. An NCD is a determination by the Secretary for whether or not a particular item or service is covered nationally under the Medicare Program (title XVIII of the Act), but does not include a determination of the code, if any, that is assigned to a particular covered item or service, or payment determination for a particular covered item or service. The entries below include information concerning completed decisions, as well as sections on program and decision memoranda, which also announce decisions or, in some cases, explain why it was not appropriate to issue an NCD. Information on completed decisions as well as pending decisions has also been posted on the CMS website. There were no updates that occurred in the 3-month period. This information is available at: www.cms.gov/medicare-coverage-database/. For questions or additional information, contact Wanda Belle, MPA (410-786-7491).

Addendum V: FDA-Approved Category B Investigational Device Exemptions (IDEs) (July through September 2016)

Addendum V includes listings of the FDA-approved investigational device exemption (IDE) numbers that the FDA assigns. The listings are organized according to the categories to which the devices are assigned (that is, Category A or Category B), and identified by the IDE number. For the purposes of this quarterly notice, we list only the specific updates to the Category B IDEs as of the ending date of the period covered by this notice and a contact person for questions or additional information. For questions or additional information, contact John Manlove (410-786-6877).

Under the Food, Drug, and Cosmetic Act (21 U.S.C. 360c) devices fall into one of three classes. To assist CMS under this categorization process, the FDA assigns one of two categories to each FDA-approved investigational device exemption (IDE). Category A refers to experimental IDEs, and Category B refers to non-experimental IDEs. To obtain more information about the classes or categories, please refer to the notice published in the April 21, 1997 **Federal Register** (62 FR 19328).

IDE	Device	Start Date
G160070	Plasma Delipidation System	07/06/2016
G160123	Teosyal RHA Redensity (TPRL)	07/06/2016
G150157	LifeSeal Kit - LifeSeal Surgical Sealant and Delivery System (LifeSeal Applicator/LifeSeal Laparoscopic Applicator)	07/07/2016
G160128	SIR-Spheres microspheres brachytherapy device plus associated delivery accessories	07/08/2016
G160129	Embozene Microspheres	07/12/2016
G150266	Evoke Closed Loop Stimulator (CLS), Evoke eCLS, Evoke Percutaneous 12C Leads, Evoke Pocket Console (EPC), Evoke 12C Paddle Leads	07/13/2016
G160133	Trailblaze Pharos	07/13/2016
G160135	NUT IHC Companion Diagnostic Assay	07/13/2016
G160130	Biodegradable Temporizing Matrix	07/14/2016
G160139	Infuse Bone Graft/Mastergraft Strip	07/22/2016
G160017	X-Seal 6F Vascular Closure Device	07/26/2016

IDE	Device	Start Date
G160034	Mirabilis System	07/26/2016
G160141	MAGE-A10 Immunohistochemistry (IHC) Clinical Trial Assay	07/26/2016
G160145	JIB System	07/29/2016
G160150	CERAMENT G	08/03/2016
G160026	Medtronic Valiant TAAA Stent Graft System	08/04/2016
G160153	Zepto	08/05/2016
G150186	Sir-Sphere Microspheres	08/09/2016
G160159	Echopulse High Intensity Focused Ultrasound Device	08/12/2016
G160155	Deep Brain Stimulation Surgery for Treatment of Focal Hand Dystonia	08/17/2016
G160157	tteris Antimicrobial Skin & Wound Cleanser	08/18/2016
G160161	Cortical Stimulation	08/19/2016
G160162	MagVenture MagPro X100 with MagOption Magnetic Stimulator, 230V C-B60 Butterfly Coil Coil COOL-B64 A/P (dynmaic cooled butterfly active & sham coil)	08/19/2016
G160170	LINX Reflux Management System	08/19/2016
G160158	6 Month Double-Blind Randomized Placebo-Controlled Trial to Evaluate the Safety and Efficacy of Small Particle Hyaluronic Acid to Treat Acne Scars Located on the Cheeks and Forehead	08/25/2016
G160165	BreathID MCS System ^{13}C-Methacetin Breath Test (MBT)	08/26/2016
G160171	WATCHMAN Left Atrial Appendage Closure (LAAC) Device	08/26/2016
G130156	NEURAL ENABLED PROSTHESIS (NEP)	08/31/2016
G160146	45mm Tongue Implant, 55mm Tongue Implant, 65mm Tongue Implant, 75mm Tongue Implant, Tongue Implanter Kit	09/01/2016
G160173	M6-C Artificial Cervical Disc	09/02/2016
G160178	Ventana DLL3 (SC16.65) IHC Assay	09/07/2016
G150244	Wireless Cardiac Stimulation System, WiCS-LV System, WiCS, WiSE™	09/09/2016
G160177	Arctic Front Advance Cardiac CryoAblation Catheter; Freezor MAX Cardiac CryoAblation Catheter	09/09/2016
G160101	Cerene Cryotherapy Device	09/12/2016
G160085	Chocolate Touch Paclitaxel Coated PTA Balloon Catheter	09/16/2016
G160132	GE Datex-Ohmeda Aisys CS2 Anesthesia System with Optional Et Control Feature	09/16/2016
G160184	GelrinC Cartilage Repair Device	09/22/2016
G160182	Medtronic TAAA Debranching Stent Graft System	09/23/2016
G160183	INTRAVASCULAR TEMPERATURE MANAGEMENT (IVTM) SYSTEM QUATTRO CATHETER	09/23/2016
G160096	Therasphere microspheres	09/26/2016
G160188	SUBCUTANEOUS MEDIAN NERVE NEUROMODULATION FOR DRUG-TREATMENT RESISTANT HYPERTESION	09/29/2016
G160185	Jarvik 2015 Ventricular Assist System	09/30/2016
G160190	AMPLATZER Duct Occluder II Additional Sizes	09/30/2016

Addendum VI: Approval Numbers for Collections of Information (July through September 2016)

All approval numbers are available to the public at Reginfo.gov. Under the review process, approved information collection requests are assigned OMB control numbers. A single control number may apply to several related information collections. This information is available at www.reginfo.gov/public/do/PRAMain. For questions or additional information, contact William Parham (410-786-4669).

Addendum VII: Medicare-Approved Carotid Stent Facilities, (July through September 2016)

Addendum VII includes listings of Medicare-approved carotid stent facilities. All facilities listed meet CMS standards for performing carotid artery stenting for high risk patients. On March 17, 2005, we issued our decision memorandum on carotid artery stenting. We determined that carotid artery stenting with embolic protection is reasonable and necessary only if performed in facilities that have been determined to be competent in performing the evaluation, procedure, and follow-up necessary to ensure optimal patient outcomes. We have created a list of minimum standards for facilities modeled in part on professional society statements on competency. All facilities must at least meet our standards in order to receive coverage for carotid artery stenting for high risk patients. For the purposes of this quarterly notice, we are providing only the specific updates that have occurred in the 3-month period. This information is available at: http://www.cms.gov/MedicareApprovedFacilitie/CASF/list.asp#TopOfPage For questions or additional information, contact Sarah Fulton, MHS (410-786-2749).

Facility	Provider Number	Effective Date	State
The following facilities are new listings for this quarter.			
Newton-Wellesley Hospital 2014 Washington Street Newton, MA 02462-1607	220101	07/22/2016	MA
Temecula Valley Hospital 31700 Temecula Parkway Temecula, CA 92592	1679816201	07/22/2016	CA
Great Plains Health Heart & Vascular Center 601 West Leota Street PO Box 1167 North Platte, NE 69101	1700855533	09/07/2016	NE
The following facilities have editorial changes (in bold).			
FROM: Presbyterian Hospital of Dallas **TO: Texas Health Presbyterian Hospital of Dallas**	450462	05/10/2005	TX

Facility	Provider Number	Effective Date	State
18200 Walnut Hill Lane Dallas, TX 75231-4496			
FROM: Presbyterian Hospital of Denton **TO: Texas Health Presbyterian Hospital Denton** 3000 I-35N Denton, TX 76201	450743	01/10/2007	TX
FROM: Harris Methodist Fort Worth Hospital **TO: Texas Health Harris Methodist Hospital Fort Worth** 1301 Pennsylvania Avenue Fort Worth, TX 76104	450135	04/20/2005	TX
FROM: Arlington Memorial Hospital **TO: Texas Health Arlington Memorial Hospital** 800 West Randol Mill Road Arlington, TX 76012	450064	11/04/2005	TX
FROM: Harris Methodist HEB **TO: Texas Health Harris Methodist Hospital Hurst-Euless-Bedford** **251 Westpark Way** **Euless, TX 76040**	450639	05/16/2005	TX
Mercy Health Partners **1700 Clinton Street Muskegon, MI 49442**	23-0066	12/21/2005	MI
Manchester Memorial Hospital 71 Haynes Street Manchester, CT 06040	**070027**	03/09/2016	CT
FROM: Mercy Hospital **TO: Regional Hospital of Scranton** 746 Jefferson Avenue Scranton, PA 18501	390237	04/18/2006	PA
FROM: Wyoming Valley Health Care System **TO: Wilkes-Barre General Hospital** **575 North River Street** **Wilkes Barre, PA 18764**	390137	04/26/2005	PA
Mercy Hospital 3663 South Miami Avenue Miami, FL 33133	**10016700**	08/26/2005	FL

Addendum VIII:
American College of Cardiology's National Cardiovascular Data Registry Sites (July through September 2016)

Addendum VIII includes a list of the American College of Cardiology's National Cardiovascular Data Registry Sites. We cover implantable cardioverter defibrillators (ICDs) for certain clinical indications, as long as information about the procedures is reported to a central registry. Detailed descriptions of the covered indications are available in the NCD. In January 2005, CMS established the ICD Abstraction Tool through the Quality Network Exchange (QNet) as a temporary data collection mechanism. On October 27, 2005, CMS announced that the American College of Cardiology's National Cardiovascular Data Registry (ACC-NCDR) ICD Registry satisfies the data reporting requirements in the NCD. Hospitals needed to transition to the ACC-NCDR ICD Registry by April 2006.

Effective January 27, 2005, to obtain reimbursement, Medicare NCD policy requires that providers implanting ICDs for primary prevention clinical indications (that is, patients without a history of cardiac arrest or spontaneous arrhythmia) report data on each primary prevention ICD procedure. Details of the clinical indications that are covered by Medicare and their respective data reporting requirements are available in the Medicare NCD Manual, which is on the CMS website at http://www.cms.hhs.gov/Manuals/IOM/itemdetail.asp?filterType=none&filterByDID=99&sortByDID=1&sortOrder=ascending&itemID=CMS014961

A provider can use either of two mechanisms to satisfy the data reporting requirement. Patients may be enrolled either in an Investigational Device Exemption trial studying ICDs as identified by the FDA or in the ACC-NCDR ICD registry. Therefore, for a beneficiary to receive a Medicare-covered ICD implantation for primary prevention, the beneficiary must receive the scan in a facility that participates in the ACC-NCDR ICD registry. The entire list of facilities that participate in the ACC-NCDR ICD registry can be found at www.ncdr.com/webncdr/common

For the purposes of this quarterly notice, we are providing only the specific updates that have occurred in the 3-month period. This information is available by accessing our website and clicking on the link for the

American College of Cardiology's National Cardiovascular Data Registry at: www.ncdr.com/webncdr/common. For questions or additional information, contact Sarah Fulton, MHS (410 786 2749).

Facility	City	State
The following facilities are new listings for this quarter.		
New York Community Hospital	Brooklyn	NY
Capital Medical Center	Olympia	WA
Bartow Regional Medical Center	Bartow	FL
Central Carolina (LifePoint)	Sanford	NC
CHI St. Luke's Health Memorial Livingston	Livingston	TX
Skypark Surgery Center	Torrance	CA
Victor Valley Global Medical Center	Victorville	CA
Chambersburg Hospital	Chambersburg	PA
Northeastern Nevada Regional Hospital	Elko	NV
Doctors Hospital of Manteca	Manteca	CA
North Hawaii Community Hospital	Kameula	HI

Facility	City	State
St. Luke's Monroe Hospital	Stroudsburg	PA
Heart and Rhythm Institute of Trinity	Elfers	FL
Olean General Hospital	Olean	NY
Monongahela Valley Hospital	Monongahela	PA
Kaiser Permanente Vallejo Cath Lab	Vallejo	CA
Sonora Regional Medical Center	Sonora	CA
Norton Women's and Kosair Children's Hospital	Louisville	KY

Addendum IX: Active CMS Coverage-Related Guidance Documents (July through September 2016)

CMS issued a guidance document on November 20, 2014 titled "Guidance for the Public, Industry, and CMS Staff: Coverage with Evidence Development Document". Although CMS has several policy vehicles relating to evidence development activities including the investigational device exemption (IDE), the clinical trial policy, national coverage determinations and local coverage determinations, this guidance document is principally intended to help the public understand CMS's implementation of coverage with evidence development (CED) through the national coverage determination process. The document is available at http://www.cms.gov/medicare-coverage-database/details/medicare-coverage-document-details.aspx?MCDId=27. There are no additional Active CMS Coverage-Related Guidance Documents for the 3-month period. For questions or additional information, contact JoAnna Baldwin, MS (410-786-7205).

Addendum X: List of Special One-Time Notices Regarding National Coverage Provisions (July through September 2016)

There were no special one-time notices regarding national coverage provisions published in the 3-month period. This information is available at www.cms.hhs.gov/coverage. For questions or additional information, contact JoAnna Baldwin, MS (410-786 7205).

Addendum XI: National Oncologic PET Registry (NOPR) (July through September 2016)

Addendum XI includes a listing of National Oncologic Positron Emission Tomography Registry (NOPR) sites. We cover positron emission tomography (PET) scans for particular oncologic indications when they are performed in a facility that participates in the NOPR.

In January 2005, we issued our decision memorandum on **positron emission tomography** (PET) scans, which stated that CMS would cover PET scans for particular oncologic indications, as long as they were performed in the context of a clinical study. We have since recognized the National Oncologic PET Registry as one of these clinical studies. Therefore, in order for a beneficiary to receive a Medicare-covered PET scan, the beneficiary must receive the scan in a facility that participates in the registry. There were no additions, deletions, or editorial changes to the listing of National Oncologic Positron Emission Tomography Registry (NOPR) in the 3-month period. This information is available at http://www.cms.gov/MedicareApprovedFacilitie/NOPR/list.asp#TopOfPage. For questions or additional information, contact Stuart Caplan, RN, MAS (410-786-8564).

Addendum XII: Medicare-Approved Ventricular Assist Device (Destination Therapy) Facilities (July through September 2016)

Addendum XII includes a listing of Medicare-approved facilities that receive coverage for ventricular assist devices (VADs) used as destination therapy. All facilities were required to meet our standards in order to receive coverage for VADs implanted as destination therapy. On October 1, 2003, we issued our decision memorandum on VADs for the clinical indication of destination therapy. We determined that VADs used as destination therapy are reasonable and necessary only if performed in facilities that have been determined to have the experience and infrastructure to ensure optimal patient outcomes. We established facility standards and an application process. All facilities were required to meet our standards in order to receive coverage for VADs implanted as destination therapy.

We are providing only the specific updates to the list of Medicare-approved facilities that meet our standards that have occurred in the 3-month period. This information is available at http://www.cms.gov/MedicareApprovedFacilitie/VAD/list.asp#TopOfPage. For questions or additional information, contact Linda Gousis, JD, (410-786-8616).

Facility	Provider Number	Date Approved	State
The following facilities are new listings for this quarter.			
University Hospitals and Health System 2500 North State Street Jackson, MS 39216	25-0001	08/17/2016	MS
Cleveland Clinic Florida 3100 Weston Road Weston, FL 33331	10-0289	05/27/2015	FL

Kaiser Sunnyside Medical Center 10180 SE Sunnyside Road Clackamas, OR 97015-9303	38-0091	09/14/2016	OR
The University of Kansas Hospital Authority 3901 Rainbow Boulevard Kansas City, KS 66160	17-0040	04/06/2016	KS
North Shore University Hospital 300 Community Drive Manhasset, NY 11030	33-0106	09/28/2016	NY

Addendum XIII: Lung Volume Reduction Surgery (LVRS) (July through September 2016)

Addendum XIII includes a listing of Medicare-approved facilities that are eligible to receive coverage for lung volume reduction surgery. Until May 17, 2007, facilities that participated in the National Emphysema Treatment Trial were also eligible to receive coverage. The following three types of facilities are eligible for reimbursement for Lung Volume Reduction Surgery (LVRS):

- National Emphysema Treatment Trial (NETT) approved (Beginning 05/07/2007, these will no longer automatically qualify and can qualify only with the other programs);
- Credentialed by the Joint Commission (formerly, the Joint Commision on Accreditation of Healthcare Organizations (JCAHO)) under their Disease Specific Certification Program for LVRS; and
- Medicare approved for lung transplants.

Only the first two types are in the list. There were no updates to the listing of facilities for lung volume reduction surgery published in the 3-month period. This information is available at www.cms.gov/MedicareApprovedFacilitie/LVRS/list.asp#TopOfPage. For questions or additional information, contact Sarah Fulton, MHS (410-786-2749).

Addendum XIV: Medicare-Approved Bariatric Surgery Facilities (July through September 2016)

Addendum XIV includes a listing of Medicare-approved facilities that meet minimum standards for facilities modeled in part on professional society statements on competency. All facilities must meet our standards in order to receive coverage for bariatric surgery procedures. On February 21, 2006, we issued our decision memorandum on bariatric surgery procedures. We determined that bariatric surgical procedures are reasonable and necessary for Medicare beneficiaries who have a body-mass index (BMI) greater than or equal to 35, have at least one co-morbidity related to obesity and have been previously unsuccessful with medical treatment for obesity. This decision also stipulated that covered bariatric surgery procedures are reasonable and necessary only when performed at facilities that are: (1) certified by the American College of Surgeons (ACS) as a Level 1 Bariatric Surgery Center (program standards and requirements in effect on February 15, 2006); or (2) certified by the American Society for Bariatric Surgery (ASBS) as a Bariatric Surgery Center of Excellence (BSCOE) (program standards and requirements in effect on February 15, 2006).

There were no additions, deletions, or editorial changes to Medicare-approved facilities that meet CMS's minimum facility standards for bariatric surgery that have been certified by ACS and/or ASMBS in the 3-month period. This information is available at www.cms.gov/MedicareApprovedFacilitie/BSF/list.asp#TopOfPage. For questions or additional information, contact Sarah Fulton, MHS (410-786-2749).

Addendum XV: FDG-PET for Dementia and Neurodegenerative Diseases Clinical Trials (July through September 2016)

There were no FDG-PET for Dementia and Neurodegenerative Diseases Clinical Trials published in the 3-month period.

This information is available on our website at www.cms.gov/MedicareApprovedFacilitie/PETDT/list.asp#TopOfPage. For questions or additional information, contact Stuart Caplan, RN, MAS (410-786-8564).

[FR Doc. 2016–27315 Filed 11–10–16; 8:45 am]
BILLING CODE 4120–01–C

DEPARTMENT OF HEALTH AND HUMAN SERVICES

Administration for Children and Families

Agency Information Collection: Comprehensive Child Welfare Information System

Notice

The Office of Management and Budget (OMB) has assigned approval number 0970–0463 to the Comprehensive Child Welfare Information System (CCWIS) Final Rule (81 FR 35450, published June 2, 2016) information collection. The CCWIS Final Rule describes an optional child welfare information system. States and tribes electing to build a CCWIS must collect and report certain information to the Administration for Children and Families regarding their CCWIS plans. The information collection described in the Final Rule includes:

- The automated function list (45 CFR 1355.52(i)(1)(ii)–(iii) and (i)(2))
- The data quality plan (45 CFR 1355.52(d)(5))
- The Notice of Intent (45 CFR 1355.52(i)(1))

The authority for the information collection expires on 10/31/2019 12:00:00 a.m.

Authority: 42 U.S.C. 620 *et seq.,* 42 U.S.C. 670 *et seq.;* 42 U.S.C. 1301 and 1302.

Robert Sargis,

Reports Clearance Officer.

[FR Doc. 2016–27280 Filed 11–10–16; 8:45 am]
BILLING CODE 4184–01–P

DEPARTMENT OF HEALTH AND HUMAN SERVICES

Food and Drug Administration

[Docket No. FDA–2015–N–4169]

Edward Manookian (Also Known as Ed Manning): Debarment Order

AGENCY: Food and Drug Administration, HHS.

ACTION: Notice.

SUMMARY: The U.S. Food and Drug Administration (FDA or Agency) is issuing an order under the Federal Food, Drug, and Cosmetic Act (the FD&C Act) permanently debarring Edward Manookian from providing services in any capacity to a person that has an approved or pending drug product application. FDA bases this order on a finding that Mr. Manookian was convicted of felonies under Federal law for conduct relating to the regulation of a drug product under the FD&C Act. Mr. Manookian was given notice of the proposed permanent debarment and an opportunity to request a hearing within the timeframe prescribed by regulation. Mr. Manookian failed to request a hearing. Mr. Manookian's failure to request a hearing constitutes a waiver of his right to a hearing concerning this action.

DATES: This order is effective November 14, 2016.

ADDRESSES: Submit applications for special termination of debarment to the Division of Dockets Management (HFA–305), Food and Drug Administration, 5630 Fishers Lane, Rm. 1061, Rockville, MD 20852.

FOR FURTHER INFORMATION CONTACT: Kenny Shade, Division of Enforcement, Food and Drug Administration, 12420 Parklawn Dr. (ELEM–4144), Rockville, MD 20857, 301–796–4640.

SUPPLEMENTARY INFORMATION:

I. Background

Section 306(a)(2)(B) of the FD&C Act (21 U.S.C. 335a(a)(2)(B)) requires debarment of an individual if FDA finds that the individual has been convicted of a felony under Federal law for conduct relating to the regulation of any drug product under the FD&C Act. On August 28, 2015, the U.S. District Court for the Middle District of Tennessee entered judgment against Mr. Manookian for two counts of conspiracy to commit an offense against the United States, in violation of 18 U.S.C. 371.

FDA's finding that the debarment is appropriate is based on the felony convictions referenced herein. The factual basis for these convictions is as follows: Mr. Manookian was the President and owner of Melanocorp, Inc. (Melanocorp), a for-profit corporation that conducted operations in the Middle District of Tennessee, and his duties included overseeing the employees and operations of Melanocorp.

Melanotan II (MII) was a peptide, or series of amino acids, that was marketed, sold, and shipped by Melanocorp to customers in the United States and abroad. Mr. Manookian's company advertised MII, an unapproved new drug, as an injectable tanning product through an internet Web site. The Melanocorp Web site also advertised MII as being 100 percent U.S. made, whereas in fact some of the MII sold by Melanocorp was manufactured in and imported from China.

On or about August 30, 2007, Melanocorp received a warning letter from FDA expressing concern about Melanocorp's marketing of MII. The warning letter noted that, based on information and statements on the Melanocorp Web site, MII constituted a new drug under the FD&C Act that could not be introduced or delivered for introduction into interstate commerce without an FDA approved application. The warning letter concluded that the sale of MII without an FDA approved application violated the FD&C Act and instructed Mr. Manookian's company to take prompt action to correct the violations cited in the warning letter.

On or about September 17, 2007, after consulting with counsel, Mr. Manookian sent a letter to FDA stating that Melanocorp had stopped all promotion and sale of MII in the United States and had stopped taking orders for MII from U.S. residents.

On or about November 29, 2007, FDA sent a letter to an attorney representing Melanocorp, which reiterated that MII was considered by FDA to be an unapproved drug and warned that its introduction or delivery for introduction into interstate commerce would be a violation of the FD&C Act. The letter specifically stated that the sale of MII outside of the United States violated the FD&C Act.

On or about December 14, 2007, Mr. Manookian had a letter sent to FDA from his attorney confirming that Melanocorp had stopped taking orders for MII from U.S. residents. This letter also stated that Melanocorp did not disagree that FDA considered MII to be an unapproved new drug, but Mr. Manookian's position was that Melanocorp could lawfully export MII, regardless of its status as an unapproved new drug.

On or about December 28, 2007, FDA sent a letter to Mr. Manookian's attorney which reiterated that unapproved new drugs do not qualify for export.

Following receipt of the December 28, 2007, correspondence from FDA, Melanocorp continued to ship MII in interstate commerce. Melanocorp primarily sold MII to customers located abroad, but also shipped MII domestically on a more limited basis.

From on or about September 17, 2007, and continuing through in or about April 2009, Mr. Manookian conspired with others to defraud the United States by causing Melanocorp to ship MII to customers in the United States despite telling FDA that Melanocorp would not distribute or market MII in the United States.

As a result of these convictions, FDA sent Mr. Manookian by certified mail on

August 29, 2016, a notice proposing to permanently debar him from providing services in any capacity to a person that has an approved or pending drug product application. The proposal was based on a finding, under section 306(a)(2)(B) of the FD&C Act, that Mr. Manookian was convicted of felonies under Federal law for conduct relating to the regulation of a drug product under the FD&C Act. FDA determined that Mr. Manookian's felony convictions were related to the regulation of drug products because the conduct underlying his convictions undermined FDA's regulatory oversight over drug products marketed in the United States—Mr. Manookian knowingly sold unapproved drugs and put patients at risk. The proposal also offered Mr. Manookian an opportunity to request a hearing, providing him 30 days from the date of receipt of the letter in which to file the request, and advised him that failure to request a hearing constituted a waiver of the opportunity for a hearing and of any contentions concerning this action. The proposal was received on September 2, 2016. Mr. Manookian did not request a hearing and has, therefore, waived his opportunity for a hearing and any contentions concerning his debarment (21 CFR part 12).

II. Findings and Order

Therefore, the Director, Office of Enforcement and Import Operations, Office of Regulatory Affairs, under section 306(a)(2)(B) of the FD&C Act, under authority delegated to him (Staff Manual Guide 1410.35), finds that Edward Manookian has been convicted of felonies under Federal law for conduct relating to the regulation of a drug product under the FD&C Act. Section 306(c)(2)(A)(ii) of the FD&C Act requires that Mr. Manookian's debarment be permanent.

As a result of the foregoing finding, Edward Manookian is permanently debarred from providing services in any capacity to a person with an approved or pending drug product application under section 505, 512, or 802 of the FD&C Act (21 U.S.C. 355, 360b, or 382), or under section 351 of the Public Health Service Act (42 U.S.C. 262), effective (see **DATES**) (see sections 201(dd) (21 U.S.C. 321(dd), 306(c)(1)(B), and (c)(2)(A)(ii) of the FD&C Act). Any person with an approved or pending drug product application who knowingly employs or retains as a consultant or contractor, or otherwise uses the services of Edward Manookian, in any capacity during his debarment, will be subject to civil money penalties (section 307(a)(6) of the FD&C Act (21 U.S.C. 335b(a)(6))). If Mr. Manookian provides services in any capacity to a person with an approved or pending drug product application during his period of debarment he will be subject to civil money penalties (section 307(a)(7) of the FD&C Act). In addition, FDA will not accept or review any abbreviated new drug applications from Edward Manookian during his period of debarment (section 306(c)(1)(B) of the FD&C Act).

Any application by Mr. Manookian for special termination of debarment under section 306(d)(4) of the FD&C Act should be identified with Docket No. FDA–2015–N–4169 and sent to the Division of Dockets Management (see **ADDRESSES**). All such submissions are to be filed in four copies. The public availability of information in these submissions is governed by 21 CFR 10.20.

Publicly available submissions will be placed in the docket, and will be viewable at *http://www.regulations.gov* or at the Division of Dockets Management (see **ADDRESSES**) between 9 a.m. and 4 p.m., Monday through Friday.

Dated: November 7, 2016.

Armando Zamora,

Deputy Director, Office of Enforcement and Import Operations, Office of Regulatory Affairs.

[FR Doc. 2016–27244 Filed 11–10–16; 8:45 am]

BILLING CODE 4164–01–P

DEPARTMENT OF HEALTH AND HUMAN SERVICES

Food and Drug Administration

[Docket No. FDA–2011–N–0144]

Voluntary Qualified Importer Program; Guidance for Industry; Availability

AGENCY: Food and Drug Administration, HHS.

ACTION: Notice of availability.

SUMMARY: The Food and Drug Administration (FDA or we) is announcing the availability of a guidance for industry entitled ''FDA's Voluntary Qualified Importer Program.'' The guidance describes the Voluntary Qualified Importer Program (VQIP), which provides for expedited review and importation of food offered for importation by importers who voluntarily agree to participate in the program. The guidance describes the eligibility criteria for, and benefits of, participation in VQIP. The guidance also provides information on submitting an application for VQIP participation, obtaining a facility certification for the foreign supplier of a food imported under VQIP, the VQIP user fee, conditions that might result in the revocation of VQIP eligibility, and criteria for reinstatement of eligibility.

DATES: Submit either electronic or written comments on FDA guidances at any time.

ADDRESSES: You may submit comments as follows:

Electronic Submissions

Submit electronic comments in the following way:

- *Federal eRulemaking Portal: http://www.regulations.gov.* Follow the instructions for submitting comments. Comments submitted electronically, including attachments, to *http://www.regulations.gov* will be posted to the docket unchanged. Because your comment will be made public, you are solely responsible for ensuring that your comment does not include any confidential information that you or a third party may not wish to be posted, such as medical information, your or anyone else's Social Security number, or confidential business information, such as a manufacturing process. Please note that if you include your name, contact information, or other information that identifies you in the body of your comments, that information will be posted on *http://www.regulations.gov.*
- If you want to submit a comment with confidential information that you do not wish to be made available to the public, submit the comment as a written/paper submission and in the manner detailed below (see ''Written/Paper Submissions'' and ''Instructions'').

Written/Paper Submissions

Submit written/paper submissions as follows:

- *Mail/Hand delivery/Courier (for written/paper submissions):* Division of Dockets Management (HFA–305), Food and Drug Administration, 5630 Fishers Lane, Rm. 1061, Rockville, MD 20852.
- For written/paper comments submitted to the Division of Dockets Management, FDA will post your comment, as well as any attachments, except for information submitted, marked and identified, as confidential, if submitted as detailed in ''Instructions.''

Instructions: All submissions received must include the Docket No. FDA–2011–N–0144 for ''FDA's Voluntary Qualified Importer Program.'' Received comments will be placed in the docket and, except for those submitted as ''Confidential Submissions,'' publicly viewable at *http://www.regulations.gov* or at the Division of Dockets

Management between 9 a.m. and 4 p.m., Monday through Friday.

• *Confidential Submissions*—To submit a comment with confidential information that you do not wish to be made publicly available, submit your comments only as a written/paper submission. You should submit two copies total. One copy will include the information you claim to be confidential with a heading or cover note that states ''THIS DOCUMENT CONTAINS CONFIDENTIAL INFORMATION.'' The Agency will review this copy, including the claimed confidential information, in its consideration of comments. The second copy, which will have the claimed confidential information redacted/blacked out, will be available for public viewing and posted on *http://www.regulations.gov.* Submit both copies to the Division of Dockets Management. If you do not wish your name and contact information to be made publicly available, you can provide this information on the cover sheet and not in the body of your comments and you must identify this information as ''confidential.'' Any information marked as ''confidential'' will not be disclosed except in accordance with 21 CFR 10.20 and other applicable disclosure law. For more information about FDA's posting of comments to public dockets, see 80 FR 56469, September 18, 2015, or access the information at: *http://www.fda.gov/regulatoryinformation/dockets/default.htm.*

Docket: For access to the docket to read background documents or the electronic and written/paper comments received, go to *http://www.regulations.gov* and insert the docket number, found in brackets in the heading of this document, into the ''Search'' box and follow the prompts and/or go to the Division of Dockets Management, 5630 Fishers Lane, Rm. 1061, Rockville, MD 20852.

Submit written requests for a single hard copy of the guidance to the Office of Enforcement and Import Operations (ELEM–3108), Office of Regulatory Affairs, Food and Drug Administration, 12420 Parklawn Dr., Element Bldg., Rockville, MD 20857. Send two self-addressed adhesive labels to assist that office in processing your request. See the **SUPPLEMENTARY INFORMATION** section for electronic access to the guidance.

FOR FURTHER INFORMATION CONTACT:

Regarding the guidance: Office of Enforcement and Import Operations (ELEM–3108), Office of Regulatory Affairs, Food and Drug Administration, 12420 Parklawn Dr., Element Bldg., Rockville, MD 20857, 301–796–0356.

Regarding the information collection: FDA PRA Staff, Office of Operations, Food and Drug Administration, Three White Flint North, 11601 Landsdown St., 10A–12M, North Bethesda, MD 20852, *PRAStaff@fda.hhs.gov.*

SUPPLEMENTARY INFORMATION:

I. Background

Section 302 of the FDA Food Safety Modernization Act (FSMA) (Pub. L. 111–353) amended the Federal Food, Drug, and Cosmetic Act (the FD&C Act) by adding section 806, Voluntary Qualified Importer Program (21 U.S.C. 384b). Section 806(a)(1) of the FD&C Act directs FDA to establish a voluntary program for the expedited review and importation of food, and to establish a process for the issuance of a facility certification to accompany food offered for importation by importers participating in VQIP. Section 806(a)(2) of the FD&C Act directs FDA to issue a guidance document related to participation in, revocation of such participation in, reinstatement in, and compliance with VQIP.

We are announcing the availability of a guidance for industry entitled ''FDA's Voluntary Qualified Importer Program.'' We are issuing this guidance consistent with our good guidance practices regulation (21 CFR 10.115). The guidance represents the current thinking of FDA on this topic. It does not establish any rights for any person and is not binding on FDA or the public. You can use an alternative approach if it satisfies the requirements of the applicable statutes and regulations.

In the **Federal Register** of June 5, 2015 (80 FR 32136), we made available a draft guidance for industry on VQIP for importers of human or animal food and gave interested parties an opportunity to submit comments by August 19, 2015, for us to consider before beginning work on the final version of the guidance. We received numerous comments on the draft guidance and have modified the final guidance where appropriate. Changes to the guidance include:

• Clarifying that, during the VQIP fiscal year, a VQIP importer may add additional food from a foreign supplier from which the importer already imports food under VQIP;

• clarifying that VQIP applicants will not be required to upload food labels for foods included in the VQIP application, but FDA may request a copy of food labels for the foods included in the application to determine if there are labeling violations relating to the risk of the food during a VQIP inspection or audit examinations;

• providing examples of how to ensure that the Foreign Supplier Verification Program (FSVP) or the Hazard Analysis and Critical Control Point (HACCP) importer of the food (when it is not the VQIP applicant) is in compliance with the applicable FSVP or HACCP regulations; and

• revising the '3-year import history' eligibility criteria to provide for use of shared importation history of previous or parent companies.

We also made editorial changes and changes to improve clarity. The guidance announced in this notice finalizes the draft guidance dated June 2015.

VQIP begins on January 1, 2018, which is the first date FDA will begin accepting applications to participate in VQIP for the fiscal year 2019 beginning October 1, 2018. We encourage food importers with robust supplier verification programs to apply for participation in VQIP. We anticipate that VQIP will allow FDA to focus its resources on food shipments that pose a higher risk to public health and will facilitate risk-based admissibility practices. We anticipate that we will approve approximately 200 applications for the first year of the program. We established this limit based on consideration of the demands on Agency resources necessary to establish and implement VQIP. We will review applications in the order that we receive them.

II. Paperwork Reduction Act of 1995

This guidance contains information collection provisions that are subject to review by the Office of Management and Budget (OMB) under the Paperwork Reduction Act of 1995 (44 U.S.C. 3501–3520). Under the PRA, Federal Agencies must obtain approval from OMB for each collection of information they conduct or sponsor. ''Collection of information'' is defined in 44 U.S.C. 3502(3) and 5 CFR 1320.3 and includes Agency requests or requirements that members of the public submit reports, keep records, or provide information to a third party. Section 3506(c)(2)(A) of the PRA (44 U.S.C. 3506(c)(2)(A)) requires Federal Agencies to provide a 60-day notice in the **Federal Register** concerning each proposed collection of information before submitting the collection to OMB for approval. To comply with this requirement, in the **Federal Register** of June 5, 2015, we gave interested persons 60 days to comment on the information collection provisions in the draft guidance (80 FR 32136 at 32138).

Currently FDA is finalizing the VQIP application and will be submitting the proposed collection for OMB review and clearance under 44 U.S.C. 3507. An

Agency may not conduct or sponsor, and a person is not required to respond to, a collection of information unless it displays a currently valid OMB control number. FDA is issuing this final guidance subject to OMB approval of the collection of information. Before the Agency begins collecting information for the VQIP program, FDA will publish a notice in the **Federal Register** announcing OMB's decision to approve, modify, or disapprove the information collection provisions in the guidance.

The guidance also refers to previously approved collections of information found in FDA regulations. The collections of information regarding food labeling have been approved under OMB control number 0910–0381; the collections of information regarding Low Acid Canned Food have been approved under OMB control number 0910–0037; the collections of information regarding Third-Party Certification Bodies to Conduct Food Safety Audits and to Issue Certifications have been approved under OMB control number 0910–0750; the collections of information regarding Current Good Manufacturing Practice and Hazard Analysis and Risk-Based Preventive Controls for Human Food have been approved under OMB control number 0910–0751; the collections of information regarding Current Good Manufacturing Practice and Hazard Analysis and Risk-Based Preventive Controls for Food for Animals have been approved under OMB control number 0910–0789; the collections of information regarding the Foreign Supplier Verification Program have been approved under OMB control number 0910–0752; the collections of information regarding the Sanitary Transportation of Human and Animal Food have been approved under OMB control number 0910–0773; and the collections of information regarding Focused Mitigation Strategies to Protect Food Against Intentional Adulteration have been approved under OMB control number 0910–0812.

III. Electronic Access

Persons with access to the Internet may obtain the guidance at either *http://www.fda.gov/RegulatoryInformation/Guidances* or *http://www.regulations.gov.* Use the FDA Web site listed in the previous sentence to find the most current version of the guidance.

IV. Other Issues for Consideration

FSMA directs FDA to collect user fees to fund VQIP. Consistent with section 743(b)(2)(B)(iii) of the FD&C Act, we set forth a proposed set of guidelines in consideration of the burden of user fee amounts on small businesses in the **Federal Register** of June 5, 2015 (80 FR 32136), which also announced the draft guidance for industry on VQIP. We are considering comments we received on the VQIP user fee. We will publish the actual fee in a **Federal Register** notice in accordance with section 743(b)(1) of the FD&C Act prior to the fiscal year when we begin program benefits.

Dated: November 7, 2016.

Leslie Kux,

Associate Commissioner for Policy.

[FR Doc. 2016–27252 Filed 11–10–16; 8:45 am]

BILLING CODE 4164–01–P

DEPARTMENT OF HEALTH AND HUMAN SERVICES

Food and Drug Administration

[Docket No. FDA–2013–N–0579]

Agency Information Collection Activities; Submission for Office of Management and Budget Review; Comment Request; Biological Products: Reporting of Biological Product Deviations and Human Cells, Tissues, and Cellular and Tissue-Based Deviations in Manufacturing

AGENCY: Food and Drug Administration, HHS.

ACTION: Notice.

SUMMARY: The Food and Drug Administration (FDA or we) is announcing that a proposed collection of information has been submitted to the Office of Management and Budget (OMB) for review and clearance under the Paperwork Reduction Act of 1995 (the PRA).

DATES: Fax written comments on the collection of information by December 14, 2016.

ADDRESSES: To ensure that comments on the information collection are received, OMB recommends that written comments be faxed to the Office of Information and Regulatory Affairs, OMB, Attn: FDA Desk Officer, FAX: 202–395–7285, or emailed to *oira_submission@omb.eop.gov.* All comments should be identified with the OMB control number 0910–0458. Also include the FDA docket number found in brackets in the heading of this document.

FOR FURTHER INFORMATION CONTACT: FDA PRA Staff, Office of Operations, Food and Drug Administration, Three White Flint North, 10A63, 11601 Landsdown St., North Bethesda, MD 20852, *PRAStaff@fda.hhs.gov.*

SUPPLEMENTARY INFORMATION: In compliance with 44 U.S.C. 3507, FDA has submitted the following proposed collection of information to OMB for review and clearance.

Biological Products: Reporting of Biological Product Deviations and Human Cells, Tissues, and Cellular and Tissue-Based Product Deviations in Manufacturing; Forms FDA 3486 and 3486A.

OMB Control Number 0910–0458—Extension

Under section 351 of the Public Health Service Act (PHS Act) (42 U.S.C. 262), all biological products, including human blood and blood components, offered for sale in interstate commerce must be licensed and meet standards, including those prescribed in FDA regulations, designed to ensure the continued safety, purity, and potency of such products. In addition under section 361 of the PHS Act (42 U.S.C. 264), FDA may issue and enforce regulations necessary to prevent the introduction, transmission, or spread of communicable diseases between the States or possessions or from foreign countries into the States or possessions. Further, section 501 of the Federal Food, Drug, and Cosmetic Act (the FD&C Act) (21 U.S.C. 351) provides that drugs and devices (including human blood and blood components) are adulterated if they do not conform with current good manufacturing practice (CGMP) assuring that they meet the requirements of the FD&C Act. Establishments manufacturing biological products, including human blood and blood components, must comply with the applicable CGMP regulations (21 CFR parts 211, 606, and 820)) and current good tissue practice (CGTP) regulations (part 1271 (21 CFR part 1271)) as appropriate. FDA regards biological product deviation (BPD) reporting and human cells, tissues, and cellular and tissue-based product (HCT/P) deviation reporting to be an essential tool in its directive to protect public health by establishing and maintaining surveillance programs that provide timely and useful information.

Section 600.14 (21 CFR 600.14), in brief, requires the manufacturer who holds the biological product license, for other than human blood and blood components, and who had control over a distributed product when the deviation occurred, to report to the Center for Biologics Evaluation and Research (CBER) or to the Center for Drugs Evaluation and Research (CDER) as soon as possible but at a date not to exceed 45 calendar days after acquiring information reasonably suggesting that a

reportable event has occurred. Section 606.171 (21 CFR 606.171), in brief, requires licensed manufacturers of human blood and blood components, including Source Plasma, unlicensed registered blood establishments, and transfusion services, who had control over a distributed product when the deviation occurred, to report to CBER as soon as possible but at a date not to exceed 45 calendar days after acquiring information reasonably suggesting that a reportable event has occurred. Similarly, § 1271.350(b) (21 CFR 1271.350(b)), in brief, requires HCT/P establishments that manufacture non-reproductive HCT/Ps described in § 1271.10 to investigate and report to CBER all HCT/P deviations relating to a distributed HCT/P that relates to the core CGTP requirements, if the deviation occurred in the establishment's facility or in a facility that performed a manufacturing step for the establishment under contract, agreement, or other arrangement. Form FDA 3486 is used to submit BPD reports and HCT/P deviation reports.

Respondents to this collection of information are (1) licensed manufacturers of biological products other than human blood and blood components, (2) licensed manufacturers of blood and blood components including Source Plasma, (3) unlicensed registered blood establishments, (4) transfusion services, and (5) establishments that manufacture non-reproductive HCT/Ps regulated solely under section 361 of the PHS Act as described in § 1271.10. The number of respondents and total annual responses are based on the BPD reports and HCT/P deviation reports FDA received in fiscal year 2015. The number of licensed manufacturers and total annual responses under § 600.14 include the estimates for BPD reports submitted to both CBER and CDER. Based on the information from industry, the estimated average time to complete a deviation report is 2 hours, which includes a minimal one-time burden to create a user account for those reports submitted electronically. The availability of the standardized report form, Form FDA 3486, and the ability to submit this report electronically to CBER (CDER does not currently accept electronic filings) further streamlines the report submission process.

CBER has developed a Web-based addendum to Form FDA 3486 (Form FDA 3486A) to provide additional information when a BPD report has been reviewed by FDA and evaluated as a possible recall. The additional information requested includes information not contained in the Form FDA 3486 such as: (1) Distribution pattern; (2) method of consignee notification; (3) consignee(s) of products for further manufacture; (4) additional product information; (5) updated product disposition; and (6) industry recall contacts. This information is requested by CBER through email notification to the submitter of the BPD report. This information is used by CBER for recall classification purposes. At this time, Form FDA 3486A is being used only for those BPD reports submitted under § 606.171. CBER estimates that 5 percent of the total BPD reports submitted to CBER under § 606.171 would need additional information submitted in Form FDA 3486A. CBER further estimates that it would take between 10 to 20 minutes to complete Form FDA 3486A. For calculation purposes, CBER is using 15 minutes.

Activities such as investigating, changing standard operating procedures or processes, and followup are currently required under 21 CFR parts 211 (approved under OMB control number 0910–0139), 606 (approved under OMB control number 0910–0116), 820 (approved under OMB control number 0910–0073) and 1271 (approved under OMB control number 0910–0543) and, therefore, are not included in the burden calculation for the separate requirement of submitting a deviation report to FDA.

In the **Federal Register** of June 7, 2016 (81 FR 36550), we published a 60-day notice requesting public comment on the proposed extension of this collection of information. One comment was submitted in response to the notice concerning potential ways to minimize the burden associated with the information collection. The commenter encouraged FDA to permit the use of attachments to Forms FDA 3486 and 3486A when reporting multiple biological product deviations from a single starting source rather than retype the information. The comment suggested, alternatively, that respondents' burden might be reduced by ''capping the forms at a much lower number of products/lots than the current maximum of 100.'' Finally, the comment suggested Forms FDA 3486 and 3486A incorporate technology that would permit barcode scanning for relevant fields.

FDA is appreciative of this feedback. At this time, however, we are unable to make the suggested revisions to the information collection. Currently, product information can readily be imported from a Microsoft Excel file (in XLS format) into the eBPD report without having to be retyped (up to 100 units/lots). In addition, the product information entered on Form FDA 3486 automatically populates Form FDA 3486A minimizing the need to manually reenter required information. While we will consider future enhancements that allow for attachments and integrate barcode or other technologies that facilitate or otherwise improve reporting, we must ensure that upgrades are compatible with our existing system.

FDA estimates the burden of this collection of information as follows:

TABLE 1—ESTIMATE ANNUAL REPORTING BURDEN [1]

21 CFR section; activity	FDA Form No.	Number of respondents	Number of responses per respondent	Total annual responses	Average burden per response	Total hours
600.14; Reporting of BPDs by licensed manufacturers.	3486	102	5.99	611	2	1,222
606.171; Reporting of product deviations by licensed manufacturers, unlicensed registered blood establishments, and transfusion services.	3486	1,738	26.34	45,774	2	91,548
1271.350(b); HCT/P deviations	3486	97	2.64	256	2	512
Web-based Addendum	[2] 3486A	87	26.31	2,289	0.25 (15 minutes)	572
Total						93,854

[1] There are no capital costs or operating and maintenance costs associated with this collection of information.

[2] Five percent of the number of respondents (1,738 × 0.05 = 87) and total annual responses to CBER (45,774 × 0.05 = 2,289).

Dated: November 7, 2016.

Leslie Kux,

Associate Commissioner for Policy.

[FR Doc. 2016–27259 Filed 11–10–16; 8:45 am]

BILLING CODE 4164–01–P

DEPARTMENT OF HEALTH AND HUMAN SERVICES

Health Resources and Services Administration

Agency Information Collection Activities: Proposed Collection: Public Comment Request; National Hospital Organ Donation Campaign Activity

AGENCY: Health Resources and Services Administration (HRSA), Department of Health and Human Services.

ACTION: Notice.

SUMMARY: In compliance with the requirement for opportunity for public comment on proposed data collection projects (Section 3506(c)(2)(A) of the Paperwork Reduction Act of 1995), HRSA announces plans to submit an Information Collection Request (ICR), described below, to the Office of Management and Budget (OMB). Prior to submitting the ICR to OMB, HRSA seeks comments from the public regarding the burden estimate, below, or any other aspect of the ICR.

DATES: Comments on this ICR must be received no later than January 13, 2017.

ADDRESSES: Submit your comments to *paperwork@hrsa.gov* or mail the HRSA Information Collection Clearance Officer, Room 14N–39, 5600 Fishers Lane, Rockville, MD 20857.

FOR FURTHER INFORMATION CONTACT: To request more information on the proposed project or to obtain a copy of the data collection plans and draft instruments, email *paperwork@hrsa.gov* or call the HRSA Information Collection Clearance Officer at (301) 443–1984.

SUPPLEMENTARY INFORMATION: When submitting comments or requesting information, please include the information request collection title for reference.

Information Collection Request Title: National Hospital Organ Donation Campaign Activity Scorecard OMB No. 0915–0373, Revision

Abstract: HRSA's Hospital Campaign, a special initiative of the Workplace Partnership for Life program, enlists the help of hospitals nationwide to increase the number of registered organ, eye, and tissue donors by hosting education and registry events in their hospitals and communities. The Activity Scorecard provides activity ideas to participating hospitals and assigns points to each activity. Hospitals that earn a certain number of points annually are recognized by HRSA and the campaign's national partners.

Need and Proposed Use of the Information: There is a substantial imbalance in the U.S. between the number of people whose life depends on an organ transplant (currently about 120,000) and the annual number of organ donors (approximately 14,000 living and deceased donors). In response to the need for increased donation, HRSA conducts public outreach initiatives to encourage the American public to enroll in their state donor registry as future organ donors. As part of this initiative, HRSA supports this National Hospital Organ Donation Campaign to involve hospitals throughout the nation as partners in the national effort to educate their staff and communities about the urgent need for donors and encourage donor registry enrollments.

The activity scorecard serves two key campaign functions: (1) It motivates and facilitates hospitals' participation in this campaign, and (2) it provides the basis for rewarding hospitals for their accomplishments. In providing more than 40 actionable donation promotion strategies hospitals can choose to implement, it eases the process of planning and participation for hospital teams. In addition, by attaching point levels to each activity, HRSA uses the information collected to recognize hospital achievements at bronze, silver, gold, and platinum point equivalents and provides certificates for all hospitals achieving any recognition level.

A list of recognized hospitals is shared with all campaign participants during monthly webinars, in campaign e-newsletters, and in communication pieces sent out by the campaign's national partners, which include the American Hospital Association and the American Society of Transplantation. In addition, local donation organizations and participating state hospital associations use the results to pay tribute to HRSA-recognized hospitals in their local service areas. The information collected also helps HRSA identify best practices that are then shared with all hospital partners on the monthly webinars. This version of the scorecard contains two new opportunities for hospitals to earn points: A point is awarded for each donor registration a hospital motivates and points are awarded for reaching the hospital's donor registration goal.

Likely Respondents: Hospital development and public relations staff of organ procurement and other donation organizations, hospital staff such as nurses or public relations/communications professionals, and volunteers that work with the hospitals on organ donation initiatives.

Burden Statement: Burden in this context means the time expended by persons to generate, maintain, retain, disclose, or provide the information requested. This includes the time needed to review instructions; to develop, acquire, install, and utilize technology and systems for the purpose of collecting, validating, and verifying information, processing and maintaining information, and disclosing and providing information; to train personnel and to be able to respond to a collection of information; to search data sources; to complete and review the collection of information; and to transmit or otherwise disclose the information. The total annual burden hours estimated for this Information Collection Request are summarized in the table below.

TOTAL ESTIMATED ANNUALIZED BURDEN HOURS

Form name	Number of respondents	Number of responses per respondent	Total responses	Average burden per response (in hours)	Total burden hours
Activity Scorecard (electronic PDF)	1,000	1	1,000	.125	125
Total	1,000		1,000		125

HRSA specifically requests comments on (1) the necessity and utility of the proposed information collection for the proper performance of the agency's functions; (2) the accuracy of the estimated burden; (3) ways to enhance the quality, utility, and clarity of the information to be collected; and (4) the use of automated collection techniques or other forms of information technology to minimize the information collection burden.

Jason E. Bennett,

Director, Division of the Executive Secretariat.

[FR Doc. 2016–27219 Filed 11–10–16; 8:45 am]

BILLING CODE 4165–15–P

DEPARTMENT OF HEALTH AND HUMAN SERVICES

Announcement of Inaugural Meeting of the Secretary's Advisory Committee on National Health Promotion and Disease Prevention Objectives for 2030

AGENCY: Office of Disease Prevention and Health Promotion, Office of the Assistant Secretary for Health, Office of the Secretary, Department of Health and Human Services.

ACTION: Notice.

SUMMARY: The U.S. Department of Health and Human Services (HHS) announces the first in a series of federal advisory committee meetings regarding the national health promotion and disease prevention objectives for 2030. The first meeting will be held in the Washington, DC metropolitan area. These meetings will be open to the public. The Committee will review the nation's health promotion and disease prevention objectives and accomplishments and will recommend goals and objectives to improve the health status and reduce health risks for Americans by the year 2030. The Committee will advise the Secretary on the Healthy People 2030 mission statement, vision statement, framework, and organizational structure. The Committee will provide advice regarding developing criteria for identifying a more focused set of measurable, nationally representative objectives. The Committee's advice must assist the Secretary in reducing the number of objectives while ensuring that the selection criteria identifies the most critical public health issues that are high-impact priorities supported by current national data sets.

DATES: The Committee will meet for two days, December 1, 2016, from 9:00 a.m. to 5:00 p.m. and December 2, 2016, from 8:30 a.m. to 3:00 p.m. Eastern Time.

ADDRESSES: The meeting will be held at the 20 F Street Conference Center located at 20 F Street NW., Washington, DC 20001, Conference Rooms A and B.

FOR FURTHER INFORMATION CONTACT: Emmeline Ochiai, Designated Federal Officer, Secretary's Advisory Committee on National Health Promotion and Disease Prevention Objectives for 2030, U.S. Department of Health and Human Services, Office of the Assistant Secretary for Health, Office of Disease Prevention and Health Promotion, 1101 Wootton Parkway, Room LL–100, Rockville, MD 20852, (240) 453–8280 (telephone), (240) 543–8281 (fax). Additional information is available on the Healthy People Web site at *http://www.healthypeople.gov.*

SUPPLEMENTARY INFORMATION: The names of the 13 members of the Secretary's Advisory Committee on National Health Promotion and Disease Prevention Objectives for 2030 are available at *http://www.healthypeople.gov.*

Purpose of Meeting: Every 10 years, through the Healthy People initiative, the HHS leverages scientific insights and lessons from the past decade, along with the new knowledge of current data, trends, and innovations, to develop the next iteration of national health promotion and disease prevention objectives. Healthy People provides science-based, 10-year national objectives for promoting health and preventing disease. Since 1979, Healthy People has established and monitored national health objectives to meet a broad range of health needs, encourage collaborations across sectors, guide individuals toward making informed health decisions, and measure the impact of disease prevention and health promotion activities. Healthy People 2030 will reflect assessments of major risks to health and wellness, changing public health priorities, and emerging technologies related to our nation's health preparedness and prevention.

Public Participation at Meeting: Members of the public are invited to observe the Committee meeting. Please note that there will be no opportunity for oral public comments during the inaugural meeting of the Committee. However, written comments are welcomed throughout the development process of the national health promotion and disease prevention objectives for 2030 and may be emailed to *HP2030@hhs.gov.*

To observe the Committee meeting, individuals must pre-register at the Healthy People Web site at *http://www.healthypeople.gov.* Registrations must be completed by close of business Eastern Time on November 28, 2016. Space for the meeting is limited and registration will be accepted until maximum room capacity is reached. A waiting list will be maintained should registrations exceed room capacity. Individuals on the waiting list will be contacted as additional space for the meeting becomes available. Registration questions may be directed to: Jim Nakayama at *events@nakamotogroup.com,* or (240) 672–4011.

Authority: 42 U.S.C. 217a. The Secretary's Advisory Committee on National Health Promotion and Disease Prevention Objectives for 2030 (Committee) is governed by provisions of the Federal Advisory Committee Act (FACA), Public Law 92–463, as amended (5 U.S.C., App.) which sets forth standards for the formation and use of federal advisory committees.

Dated: November 4, 2016.

Don Wright,

Deputy Assistant Secretary for Health, Disease Prevention and Health Promotion.

[FR Doc. 2016–27325 Filed 11–10–16; 8:45 am]

BILLING CODE 4150–32–P

DEPARTMENT OF HEALTH AND HUMAN SERVICES

National Institutes of Health

National Center for Advancing Translational Sciences; Notice of Meeting

Pursuant to section 10(a) of the Federal Advisory Committee Act, as amended (5 U.S.C. App.), notice is hereby given of a meeting of the Cures Acceleration Network Review Board.

The meeting will be open to the public, viewing virtually by WebEx.

Individuals can register to view and access the meeting by the link below. *https://nih.webex.com/nih/onstage/g.php?MTID=ef62f37f80e52de02d5c5f72a5f19aace.*

1. Click ''Register''. On the registration form, enter your information and then click ''Submit'' to complete the required registration.

2. You will receive a personalized email with the live event link.

Name of Committee: Cures Acceleration Network Review Board.

Date: December 9, 2016.

Time: 10:00 a.m. to 3:00 p.m.

Agenda: The CAN Review Board will meet virtually to discuss updates regarding CAN programs and next steps.

Place: National Institutes of Health, One Democracy Plaza, 6701 Democracy Boulevard, Bethesda, MD 20892 (Virtual Meeting).

Contact Person: Anna L. Ramsey-Ewing, Ph.D., Executive Secretary, National Center

for Advancing Translational Sciences, 1 Democracy Plaza, Room 1072, Bethesda, MD 20892, 301–435–0809, *anna.ramseyewing@nih.gov*.

(Catalogue of Federal Domestic Assistance Program Nos. 93.859, Pharmacology, Physiology, and Biological Chemistry Research; 93.350, B—Cooperative Agreements; 93.859, Biomedical Research and Research Training, National Institutes of Health, HHS)

Dated: November 7, 2016.

David Clary,

Program Analyst, Office of Federal Advisory Committee Policy.

[FR Doc. 2016–27223 Filed 11–10–16; 8:45 am]

BILLING CODE 4140–01–P

DEPARTMENT OF HEALTH AND HUMAN SERVICES

National Institutes of Health

Government-Owned Inventions; Availability for Licensing

AGENCY: National Institutes of Health, HHS.

ACTION: Notice.

SUMMARY: The inventions listed below are owned by an agency of the U.S. Government and are available for licensing in the U.S. in accordance with 35 U.S.C. 209 and 37 CFR part 404 to achieve expeditious commercialization of federally-funded research and development. Foreign patent applications are filed on selected inventions to extend market coverage for companies and may also be available for licensing.

FOR FURTHER INFORMATION CONTACT: Licensing information and copies of the U.S. patent applications listed below may be obtained by writing to the indicated licensing contact at the National Heart, Lung and Blood Institute, Office of Technology Transfer and Development, National Institutes of Health, 31 Center Drive, Room 4A29, MSC2479, Bethesda, MD 20892–2479; telephone: 301–402–5579. A signed Confidential Disclosure Agreement may be required to receive copies of the patent applications.

SUPPLEMENTARY INFORMATION: Technology descriptions follow.

Immortalized Organ of Corti Cell Line OC-k3 Description of Technology

Available for nonexclusive licensing as a research material is a conditionally immortalized Organ of Corti cell line called OC-k3. Sensory cells from the auditory organ, the Organ of Corti, are terminally differentiated and cannot be cultured. Moreover, few of them can be isolated per cochlea and survive only few hours after isolation making impossible to use on them many biochemical and molecular biology techniques. OC-k3, expresses many markers of sensory cells and it has already been used as an in vitro model for a variety of studies.

Potential Commercial Applications

- Research
- Hearing research
- Susceptibility to ototoxic drugs

Development Stage

- Materials

Inventors: Gilda Mabel Canseco de Kalinec and Federico Kalinec (both of NIDCD).

Publications

1. Bertolaso L, *et al.* (2001) ''Apoptosis in the OC-k3 immortalized cell line treated with different agents.'' *Audiology* 40:327–335. PMID: 1178104637–5745.

2. Previati M, *et al.* (2007) ''Cisplatin cytotoxicity in Organ of Corti-derived immortalized cells.'' *J Celt Biochem.*101(5):1185–97, PMID: 7243113.

Intellectual Property: HHS Reference No. E–012–2017/0—Research Material.

Licensing Contact: Michael Shmilovich, Esq, CLP; 301–435–5019; *shmilovm@mail.nih.gov.*

Dated: November 7, 2016.

Michael Shmilovich,

National Heart, Lung and Blood Institute, Office of Technology Transfer and Development, National Institutes of Health.

[FR Doc. 2016–27222 Filed 11–10–16; 8:45 am]

BILLING CODE 4140–01–P

DEPARTMENT OF HOMELAND SECURITY

Office of the Secretary

[Docket No. DHS–2016–0083]

Privacy Act of 1974; Computer Matching Program

AGENCY: U.S. Citizenship and Immigration Services, Department of Homeland Security.

ACTION: Notice of Recertification.

SUMMARY: This document provides notice of the existence of a computer matching program between the Department of Homeland Security, U.S. Citizenship and Immigration Services and the New Jersey Department of Labor and Workforce Development, titled ''Verification Division DHS–USCIS/NJ–LWD.''

SUPPLEMENTARY INFORMATION: The Department of Homeland Security, U.S. Citizenship and Immigration Services provides this notice in accordance with the Privacy Act of 1974 (5 U.S.C. 552a), as amended by the Computer Matching and Privacy Protection Act of 1988 (Public Law 100–503) and the Computer Matching and Privacy Protection Amendments of 1990 (Public Law 101–508) (Privacy Act); Office of Management and Budget (OMB) Final Guidance Interpreting the Provisions of Public Law 100–503, the Computer Matching and Privacy Protection Act of 1988, 54 FR 25818 (June 19, 1989); and appendix I to OMB's Revision of Circular No. A–130 (November 28, 2000), ''Transmittal Memorandum No. 4, Management of Federal Information Resources.''

Participating Agencies: The Department of Homeland Security, U.S. Citizenship and Immigration Services (DHS–USCIS) is the source agency and the New Jersey Department of Labor and Workforce Development (NJ–LWD) is the recipient agency.

Purpose of the Match: The purpose of this Agreement is to establish the terms and conditions governing NJLWD's access to, and use of, the DHS–USCIS Systematic Alien Verification for Entitlements (SAVE) Program, which provides immigration status information from Federal immigration records to authorized users, and to comply with the Computer Matching and Privacy Protection Act of 1988.

New Jersey Department of Labor and Workforce Development will use the SAVE Program to verify the immigration status of non U.S. citizens who apply for benefits (Benefit Applicants) under the Unemployment Compensation (UC) benefits that it administers. Under Federal law, immigrant workers must be in particular immigration categories to qualify for UC benefits. NJLWD will use the information obtained through the SAVE Program to determine whether Benefit Applicants possess the requisite immigration status to be eligible for the UC benefits administered by NJLWD.

Authority for Conducting the Matching Program: Section 121 of the Immigration Reform and Control Act (IRCA) of 1986, Public Law 99–603, as amended by the Personal Responsibility and Work Opportunity Reconciliation Act of 1996 (PRWORA), Public Law 104–193, 110 Stat. 2168 (1996), requires DHS to establish a system for the verification of immigration status of alien applicants for, or recipients of, certain types of benefits as specified within IRCA, and to make this system available to state agencies that administer such benefits. Section 121(c) of IRCA amends sec. 1137 of the Social Security Act and certain other sections

of law that pertain to federal entitlement benefit programs. Section 121(c) requires state agencies administering these programs to use DHS–USCIS's verification system to make eligibility determinations in order to prevent the issuance of benefits to ineligible alien applicants. The SAVE Program is the DHS–USCIS system available to the NJLWD and other covered agencies for use in making these eligibility determinations.

The Illegal Immigration Reform and Immigrant Responsibility Act of 1996 (IIRIRA), Public Law 104–208, 110 Stat. 3009 (1996) grants Federal, State, or local government agencies seeking to verify or ascertain the citizenship or immigration status of any individual within the jurisdiction of the agency with the authority to request such information from DHS–USCIS for any purpose authorized by law.

New Jersey Department of Labor and Workforce Development will access information contained in the SAVE Program for the purpose of confirming the immigration status of alien applicants for, or recipients of, benefits it administers to discharge its obligation to conduct such verifications pursuant to sec. 1137 of the Social Security Act (42 U.S.C. 1320b–7(a) *et seq.*) and New Jersey Statute 43:21–4.

Categories of Records and individuals covered: DHS–USCIS will provide the following to NJ–LWD: Records in the DHS–USCIS VIS database containing information related to the status of aliens and other persons on whom DHS–USCIS has a record as an applicant, petitioner, or beneficiary. See DHS/USCIS–004 Systematic Alien Verification for Entitlements Program System of Records Notice, 77 FR 47415 (August 8, 2012).

New Jersey Department of Labor and Workforce Development will provide the following to DHS–USCIS: NJ–LWD records pertaining to alien and naturalized/derived United States citizen applicants for, or recipients of, entitlement benefit programs administered by the State.

New Jersey Department of Labor and Workforce Development will match the following records with DHS–USCIS records:

- Alien Registration Number
- I–94 Number
- Last Name
- First Name
- Middle Name
- Date of Birth
- Nationality
- Social Security number (SSN)

DHS–USCIS will match the following records with NJ–LWD records:

- Alien Registration Number
- I–94 Number
- Last Name
- First Name
- Middle Name
- Date of Birth
- Country of Birth (not nationality)
- SSN (if available)
- Date of Entry
- Immigration Status Data
- Sponsorship Information (sponsor's full name, SSN, and address)

System of Records: DHS/USCIS–004 Systematic Alien Verification for Entitlements Program System of Records Notice, 77 FR 47415 (August 8, 2012).

Inclusive Dates of the Matching Program: The inclusive dates of the matching program are from December 29, 2016, and continuing for 18 months through June 28, 2018. The matching program may be extended for up to an additional 12 months thereafter, if certain conditions are met.

Address for Receipt of Public Comments or Inquires: Individuals wishing to comment on this matching program or obtain additional information about the program, including requesting a copy of the Computer Matching Agreement between DHS–USCIS and NJ–LWD, may contact:

For general questions please contact: Donald K. Hawkins, 202–272–8030, Privacy Officer, U.S. Citizenship and Immigration Services, Department of Homeland Security, 20 Massachusetts Avenue NW., Washington, DC 20529.

For privacy questions please contact: Jonathan R. Cantor (202–343–1717), Acting Chief Privacy Officer, Privacy Office Department of Homeland Security, Washington, DC 20528.

Dated: November 1, 2016.

Jonathan R. Cantor,

Acting Chief Privacy Officer, Department of Homeland Security.

[FR Doc. 2016–27141 Filed 11–10–16; 8:45 am]

BILLING CODE 9110–9L–P

DEPARTMENT OF HOMELAND SECURITY

Office of the Secretary

[Docket No. DHS–2016–0082]

Privacy Act of 1974; Computer Matching Program

AGENCY: U.S. Citizenship and Immigration Services, Department of Homeland Security.

ACTION: Notice of Recertification.

SUMMARY: This document provides notice of the existence of a computer matching program between the Department of Homeland Security, U.S. Citizenship and Immigration Services and the New York State Department of Labor, titled ''Verification Division DHS–USCIS/NYSDOL.''

SUPPLEMENTARY INFORMATION: The Department of Homeland Security, U.S. Citizenship and Immigration Services provides this notice in accordance with the Privacy Act of 1974 (5 U.S.C. 552a), as amended by the Computer Matching and Privacy Protection Act of 1988 (Pub. L. 100–503) and the Computer Matching and Privacy Protection Amendments of 1990 (Pub. L. 101–508) (Privacy Act); Office of Management and Budget (OMB) Final Guidance Interpreting the Provisions of Public Law 100–503, the Computer Matching and Privacy Protection Act of 1988, 54 FR 25818 (June 19, 1989); and appendix I to OMB's Revision of Circular No. A–130 (November 28, 2000), ''Transmittal Memorandum No. 4, Management of Federal Information Resources.''

Participating Agencies: The Department of Homeland Security, U.S. Citizenship and Immigration Services (DHS–USCIS) is the source agency and the New York State Department of Labor (NYSDOL) is the recipient agency.

Purpose of the Match: The purpose of this Agreement is to establish the terms and conditions governing NY–DOL's access to, and use of, the DHS–USCIS Systematic Alien Verification for Entitlements (SAVE) Program, which provides immigration status information from Federal immigration records to authorized users, and to comply with the Computer Matching and Privacy Protection Act of 1988.

New York State Department of Labor will use the SAVE Program to verify the immigration status of non U.S. citizens who apply for benefits (Benefit Applicants) under the Unemployment Compensation (UC) benefits that it administers. Under Federal law, immigrant workers must be in particular immigration categories to qualify for UC benefits. NY–DOL will use the information obtained through the SAVE Program to determine whether Benefit Applicants possess the requisite immigration status to be eligible for the UC benefits administered by NY–DOL.

Authority for Conducting the Matching Program: Section 121 of the Immigration Reform and Control Act (IRCA) of 1986, Public Law 99–603, as amended by the Personal Responsibility and Work Opportunity Reconciliation Act of 1996 (PRWORA), Public Law 104–193, 110 Stat. 2168 (1996), requires DHS to establish a system for the verification of immigration status of noncitizen applicants for, or recipients

of, certain types of benefits as specified within IRCA, and to make this system available to state agencies that administer such benefits. Section 121(c) of IRCA amends sec. 1137 of the Social Security Act and certain other sections of law that pertain to Federal entitlement benefit programs. Section 121(c) requires state agencies administering these programs to use DHS–USCIS's verification system to make eligibility determinations to prevent the issuance of benefits to ineligible noncitizen applicants. The SAVE Program is the DHS–USCIS system available to the NY–DOL and other covered agencies for use in making these eligibility determinations. The eligibility of Benefit Applicants is also established in New York State Unemployment Insurance Law, Article 18, Title 7, sec. 590.

The Illegal Immigration Reform and Immigrant Responsibility Act of 1996 (IIRIRA), Public Law 104–208, 110 Stat. 3009 (1996) grants Federal, State, or local government agencies seeking to verify or ascertain the citizenship or immigration status of any individual within the jurisdiction of the agency with the authority to request such information from DHS–USCIS for any purpose authorized by law.

Categories of Records and Individuals Covered: The SAVE Program uses records in the DHS–USCIS Verification Information System (VIS) database to verify immigration status; it contains information related to the status of noncitizens, naturalized citizens, and to the extent they have applied for Certificates of Citizenship, derived U.S. citizens, on whom DHS–USCIS has a record as an applicant, petitioner, sponsor, or beneficiary. See DHS/USCIS–004 Systematic Alien Verification for Entitlements (SAVE) Systems of Records Notice, 77 FR 47415 (August 8, 2012).

New York State Department of Labor records pertaining to non-citizen Benefit Applicants for, or recipients of, UC benefits administered by NY–DOL.

New York State Department of Labor will match the following records with DHS–USCIS records:

- Alien Registration Number
- I–94 Number
- Last Name
- First Name
- Middle Name
- Date of Birth
- Nationality
- Social Security number (SSN)

DHS–USCIS will match the following records with NYSDOL records:

- Alien Registration Number
- I–94 Number
- Last Name
- First Name
- Middle Name
- Date of Birth
- Country of Birth (not nationality)
- SSN (if available)
- Date of Entry
- Immigration Status Data
- Sponsorship Data

System of Records: DHS/USCIS–004 Systematic Alien Verification for Entitlements Program System of Records Notice, 77 FR 47415 (August 8, 2012).

Inclusive Dates of the Matching Program: The inclusive dates of the matching program are from December 29, 2016, and continuing for 18 months through June 28, 2018. The matching program may be extended for up to an additional 12 months thereafter, if certain conditions are met.

Address for Receipt of Public Comments or Inquires: Individuals wishing to comment on this matching program or obtain additional information about the program, including requesting a copy of the computer matching agreement between DHS–USCIS and NYSDOL, may contact.

For general questions please contact: Donald K. Hawkins, 202–272–8030, Privacy Officer, U.S. Citizenship and Immigration Services, Department of Homeland Security, 20 Massachusetts Avenue NW., Washington, DC 20529.

For privacy questions please contact: Jonathan R. Cantor, 202–343–1717, Acting Chief Privacy Officer, Privacy Office, Department of Homeland Security, Washington, DC 20528.

Dated: November 1, 2016.

Jonathan R. Cantor,

Acting Chief Privacy Officer, Department of Homeland Security.

[FR Doc. 2016–27133 Filed 11–10–16; 8:45 am]

BILLING CODE 9110–9L–P

DEPARTMENT OF HOMELAND SECURITY

Office of the Secretary

[Docket No. DHS–2016–0080]

Privacy Act of 1974; Computer Matching Program

AGENCY: U.S. Citizenship and Immigration Services, Department of Homeland Security.

ACTION: Notice of Recertification.

SUMMARY: This document provides notice of the existence of a computer matching program between the Department of Homeland Security/U.S. Citizenship and Immigration Services and the Texas Workforce Commission.

SUPPLEMENTARY INFORMATION: The Department of Homeland Security/U.S. Citizenship and Immigration Services provides this notice in accordance with the Privacy Act of 1974 (5 U.S.C. 552a), as amended by the Computer Matching and Privacy Protection Act of 1988 (Pub. L. 100–503) and the Computer Matching and Privacy Protection Amendments of 1990 (Pub. L. 101–508) (Privacy Act); Office of Management and Budget (OMB) Final Guidance Interpreting the Provisions of Public Law 100–503, the Computer Matching and Privacy Protection Act of 1988, 54 FR 25818 (June 19, 1989); and appendix I to OMB's Revision of Circular No. A–130 (November 28, 2000), ''Transmittal Memorandum No. 4, Management of Federal Information Resources.''

Participating Agencies: The Department of Homeland Security/U.S. Citizenship and Immigration Services (DHS/USCIS) is the source agency and the Texas Workforce Commission (TWC) is the recipient agency.

Purpose of the Match: The purpose of this Agreement is to establish the terms and conditions governing TWC's access to, and use of, the DHS–USCIS Systematic Alien Verification for Entitlements (SAVE) Program, which provides immigration status information from federal immigration records to authorized users, and to comply with the Computer Matching and Privacy Protection Act of 1988.

Texas Workforce Commission will use the SAVE Program to verify the immigration status of non U.S. citizens who apply for benefits (Benefit Applicants) under the Unemployment Compensation (UC) benefits that it administers. Under Federal law, immigrant workers must be in particular immigration categories to qualify for UC benefits. Texas Workforce Commission will use the information obtained through the SAVE Program to determine whether Benefit Applicants possess the requisite immigration status to be eligible for the UC benefits administered by TWC.

Authority for Conducting the Matching Program: Section 121 of the Immigration Reform and Control Act (IRCA) of 1986, Public Law 99–603, as amended by the Personal Responsibility and Work Opportunity Reconciliation Act of 1996 (PRWORA), Public Law 104–193, 110 Stat. 2168 (1996), requires DHS to establish a system for the verification of immigration status of noncitizen applicants for, or recipients of, certain types of benefits as specified within IRCA, and to make this system available to state agencies that administer such benefits. Section 121(c) of IRCA amends sec. 1137 of the Social

Security Act and certain other sections of law that pertain to Federal entitlement benefit programs. Section 121(c) requires state agencies administering these programs to use DHS–USCIS's verification system to make eligibility determinations to prevent the issuance of benefits to ineligible noncitizen applicants. The SAVE Program is the DHS–USCIS system available to the TWC and other covered agencies for use in making these eligibility determinations.

Section 642(a) of the Illegal Immigration Reform and Immigrant Responsibility Act of 1996 (IIRIRA), Public Law 104–208, 110 Stat. 3009 (1996) (8 U.S.C. 1373(a)) grants Federal, State, or local government agencies seeking to verify or ascertain the citizenship or immigration status of any individual within the jurisdiction of the agency with the authority to request such information from DHS–USCIS for any purpose authorized by law.

Texas Workforce Commission will access to the SAVE Program for the purpose of confirming the immigration status of noncitizen applicants for, or recipients of, benefits it administers to discharge its obligation to conduct such verifications pursuant to sec. 1137 of the Social Security Act (42 U.S.C. 1320b–7(a) *et seq.*) and Texas Labor Code 207.043.

Categories of Records and Individuals Covered: The SAVE Program uses the records in the DHS–USCIS Verification Information System (VIS) database to verify immigration status; it contains information related to the status of noncitizens, naturalized citizens, and to the extent they have applied for Certificates of Citizenship, derived U.S. citizens, on whom DHS–USCIS has a record as an applicant, petitioner, sponsor, or beneficiary. See DHS/USCIS–004 Systematic Alien Verification for Entitlements (SAVE) Systems of Records Notice, 77 FR 47415 (August 8, 2012).

TWC records pertaining to noncitizen Benefit Applicants for, or recipients of, UC benefits administered by TWC.

TWC will match the following records with DHS/USCIS records:

- Alien Registration Number
- I–94 Number
- Last Name
- First Name
- Middle Name
- Date of Birth
- Nationality
- Social Security number

DHS/USCIS will match the following records with TWC records:

- Alien Registration Number
- Last Name
- First Name
- Middle Name
- Date of Birth
- Country of Birth (not nationality)
- Social Security number (if available)
- Date of Entry
- Immigration Status Data
- Employment Eligibility Data

System of Records: DHS/USCIS–004 Systematic Alien Verification for Entitlements Program System of Records Notice, 77 FR 47415 (August 8, 2012).

Inclusive Dates of the Matching Program: The inclusive dates of the matching program are from December 8, 2016, and continuing for 18 months through June 7, 2018. The matching program may be extended for an additional 12 months thereafter, if certain conditions are met.

Address for Receipt of Public Comments or Inquires: Individuals wishing to comment on this matching program or obtain additional information about the program, including requesting a copy of the computer matching agreement between DHS–USCIS and TWC.

For general questions please contact: Donald K. Hawkins, 202–272–8030, Privacy Officer, U.S. Citizenship and Immigration Services, Department of Homeland Security, 20 Massachusetts Avenue NW., Washington, DC 20529.

For privacy questions please contact: Jonathan R. Cantor, 202–343–1717, Acting Chief Privacy Officer, Privacy Office, Department of Homeland Security, Washington, DC 20528.

Dated: November 1, 2016.

Jonathan R. Cantor,

Acting Chief Privacy Officer, Department of Homeland Security.

[FR Doc. 2016–27131 Filed 11–10–16; 8:45 am]

BILLING CODE 9110–9L–P

DEPARTMENT OF HOMELAND SECURITY

Office of the Secretary

[Docket No. DHS–2016–0081]

Privacy Act of 1974; Computer Matching Program

AGENCY: Department of Homeland Security, U.S. Citizenship and Immigration Services.

ACTION: Notice of Recertification.

SUMMARY: This document provides notice of the existence of a computer matching program between the Department of Homeland Security, U.S. Citizenship and Immigration Services and the Massachusetts Division of Unemployment Assistance, titled ''Verification Division DHS–USCIS/MA–DUA.''

SUPPLEMENTARY INFORMATION: The Department of Homeland Security, U.S. Citizenship and Immigration Services provides this notice in accordance with The Privacy Act of 1974 (5 U.S.C. 552a), as amended by the Computer Matching and Privacy Protection Act of 1988 (Pub. L. 100–503) and the Computer Matching and Privacy Protection Amendments of 1990 (Pub. L. 101–508) (Privacy Act); Office of Management and Budget (OMB) Final Guidance Interpreting the Provisions of Public Law 100–503, the Computer Matching and Privacy Protection Act of 1988, 54 FR 25818 (June 19, 1989); and appendix I to OMB's Revision of Circular No. A–130 (November 28, 2000), ''Transmittal Memorandum No. 4, Management of Federal Information Resources.''

Participating Agencies: The Department of Homeland Security, U.S. Citizenship and Immigration Services (DHS–USCIS) is the source agency and the Massachusetts Division of Unemployment Assistance (MA–DUA) is the recipient agency.

Purpose of the Match: The purpose of this Agreement is to establish the terms and conditions governing MA–DUA's access to, and use of, the DHS–USCIS Systematic Alien Verification for Entitlements (SAVE) Program, which provides immigration status information from Federal immigration records to authorized users, and to comply with the Computer Matching and Privacy Protection Act of 1988.

Massachusetts Division of Unemployment Assistance will use the SAVE Program to verify the immigration status of non-U.S. citizens who apply for benefits (Benefit Applicants) under the Unemployment Compensation (UC) benefits that it administers. Under Federal law, immigrant workers must be in particular immigration categories to qualify for UC benefits. Massachusetts Division of Unemployment Assistance will use the information obtained through the SAVE Program to determine whether Benefit Applicants possess the requisite immigration status to be eligible for the UC benefits administered by MA–DUA.

Authority for Conducting the Matching Program: Section 121 of the Immigration Reform and Control Act (IRCA) of 1986, Public Law 99–603, as amended by the Personal Responsibility and Work Opportunity Reconciliation Act of 1996 (PRWORA), Public Law 104–193, 110 Stat. 2168 (1996), requires DHS to establish a system for the verification of immigration status of alien applicants for, or recipients of,

certain types of benefits as specified within IRCA, and to make this system available to state agencies that administer such benefits. Section 121(c) of IRCA amends sec. 1137 of the Social Security Act and certain other sections of law that pertain to federal entitlement benefit programs. Section 121(c) requires State agencies administering these programs to use DHS–USCIS's verification system to make eligibility determinations in order to prevent the issuance of benefits to ineligible alien applicants. The SAVE Program is the DHS–USCIS system available to the MA–DUA and other covered agencies for use in making these eligibility determinations.

The Illegal Immigration Reform and Immigrant Responsibility Act of 1996 (IIRIRA), Public Law 104–208, 110 Stat. 3009 (1996) grants Federal, State, or local government agencies seeking to verify or ascertain the citizenship or immigration status of any individual within the jurisdiction of the agency with the authority to request such information from DHS–USCIS for any purpose authorized by law.

Massachusetts Division of Unemployment Assistance will access information contained in the SAVE Program for the purpose of confirming the immigration status of alien applicants for, or recipients of, benefits it administers to discharge its obligation to conduct such verifications pursuant to sec. 1137 of the Social Security Act (42 U.S.C. 1320b–7(a) *et seq.*) and Massachusetts Gen. Laws ch. 151A, sec. 25(h).

Categories of Records and Individuals Covered: The SAVE Program uses the DHS–USCIS Verification Information System (VIS) database to verify immigration status, which contains information related to the status of aliens, and naturalized citizens, and to the extent they have applied for Certificates of Citizenship, derived U.S. citizens, on whom DHS–USCIS has a record as an applicant, petitioner, sponsor, or beneficiary. See DHS/USCIS–004 Systematic Alien Verification for Entitlements (SAVE) Systems of Records Notice, 77 FR 47415 (August 8, 2012).

Massachusetts Division of Unemployment Assistance records pertaining to non-citizen Benefit Applicants for, or recipients of, UC benefits administered by MA–DUA.

Massachusetts Division of Unemployment Assistance will match the following records with DHS–USCIS records:

- Alien Registration Number
- 1–94 Number
- Last Name
- First Name
- Middle Name
- Date of Birth
- Nationality
- Social Security number (SSN)

DHS–USCIS will match the following records with MA–DUA records:

- Alien Registration Number
- Last Name
- First Name
- Middle Name
- Date of Birth
- Country of Birth (not nationality)
- SSN (if available)
- Date of Entry
- Immigration Status Data
- Sponsorship Information (sponsor's full name, SSN, and address)

System of Records: DHS/USCIS–004 Systematic Alien Verification for Entitlements Program System of Records Notice, 77 FR 47415 (August 8, 2012).

Inclusive Dates of the Matching Program: The inclusive dates of the matching program are from December 14, 2016, and continuing for 18 months through June 13, 2018. The matching program may be extended for up to an additional 12 months thereafter, if certain conditions are met.

Address for Receipt of Public Comments or Inquires: Individuals wishing to comment on this matching program or obtain additional information about the program, including requesting a copy of the computer matching agreement between DHS–USCIS and MA–DUA, may contact:

For general questions please contact: Donald K. Hawkins, 202–272–8030, Privacy Officer, U.S. Citizenship and Immigration Services, Department of Homeland Security, 20 Massachusetts Avenue NW., Washington, DC 20529.

For privacy questions please contact: Jonathan R. Cantor, 202–343–1717, Acting Chief Privacy Officer, Privacy Office, Department of Homeland Security, Washington, DC 20528.

Dated: November 1, 2016.

Jonathan R. Cantor,

Acting Chief Privacy Officer, Department of Homeland Security.

[FR Doc. 2016–27132 Filed 11–10–16; 8:45 am]

BILLING CODE 9110–9L–P

DEPARTMENT OF HOMELAND SECURITY

Office of the Secretary

[Docket No. DHS–2016–0079]

Privacy Act of 1974; Computer Matching Program

AGENCY: U.S. Citizenship and Immigration Services, Department of Homeland Security.

ACTION: Notice of Recertification.

SUMMARY: This document provides notice of the existence of a computer matching program between the Department of Homeland Security, U.S. Citizenship and Immigration Services and the California Department of Health Care Services, titled ''Verification Division DHS–USCIS/CA–DHCS.''

SUPPLEMENTARY INFORMATION: The Department of Homeland Security, U.S. Citizenship and Immigration Services provides this notice in accordance with the Privacy Act of 1974 (5 U.S.C. 552a), as amended by the Computer Matching and Privacy Protection Act of 1988 (Pub. L. 100–503) and the Computer Matching and Privacy Protection Amendments of 1990 (Pub. L. 101–508) (Privacy Act); Office of Management and Budget (OMB) Final Guidance Interpreting the Provisions of Public Law 100–503, the Computer Matching and Privacy Protection Act of 1988, 54 FR 25818 (June 19, 1989); and appendix I to OMB's Revision of Circular No. A–130 (November 28, 2000), ''Transmittal Memorandum No. 4, Management of Federal Information Resources.''

Participating Agencies: The Department of Homeland Security, U.S. Citizenship and Immigration Services (DHS–USCIS) is the source agency and the California Department of Health Care Services (CA–DHCS) is the recipient agency.

Purpose of the Match: This Computer Matching Agreement allows DHS–USCIS to provide CA–DHCS with electronic access to immigration status information contained within the DHS–USCIS Systematic Alien Verification for Entitlements (SAVE). The immigration status information will enable CA–DHCS to determine whether an applicant is eligible for benefits under Medicaid Programs administered by CA–DHCS.

Authority for Conducting the Matching Program: Section 121 of the Immigration Reform and Control Act (IRCA) of 1986, Public Law 99–603, as amended by the Personal Responsibility and Work Opportunity Reconciliation Act of 1996 (PRWORA), Public Law 104–193, 110 Stat. 2168 (1996), requires

DHS to establish a system for the verification of immigration status of alien applicants for, or recipients of, certain types of benefits as specified within IRCA, and to make this system available to state agencies that administer such benefits. Section 121(c) of IRCA amends section 1137 of the Social Security Act and certain other sections of law that pertain to federal entitlement benefit programs. Section 121(c) requires state agencies administering these programs to use DHS–USCIS's verification system to make eligibility determinations in order to prevent the issuance of benefits to ineligible alien applicants. The SAVE Program is the DHS–USCIS system available to the CA–DHCS and other covered agencies for use in making these eligibility determinations.

The Illegal Immigration Reform and Immigrant Responsibility Act of 1996 (IIRIRA), Public Law 104–208, 110 Stat. 3009 (1996) grants Federal, State, or local government agencies seeking to verify or ascertain the citizenship or immigration status of any individual within the jurisdiction of the agency with the authority to request such information from DHS–USCIS for any purpose authorized by law.

California Department of Health Care Services will access information contained in the SAVE Program for the purpose of confirming the immigration status of alien applicants for, or recipients of, benefits it administers to discharge its obligation to conduct such verifications pursuant to sec. 1137 of the Social Security Act (42 U.S.C. 1320b–7(a) *et seq.*) and California Welfare and Institution Code secs. 11104.1, 14007.5 and 14011.2.

Categories of Records and Individuals Covered: The SAVE Program uses the DHS–USCIS Verification Information System (VIS) database to verify immigration status; it contains information related to the status of aliens, naturalized citizens, and to the extent they have applied for Certificates of Citizenship, derived U.S. citizens, on whom DHS–USCIS has a record as an applicant, petitioner, sponsor, or beneficiary. See DHS/USCIS–004 Systematic Alien Verification for Entitlements (SAVE) Systems of Records Notice, 77 FR 47415 (August 8, 2012).

California Department of Health Care Services records pertaining to noncitizen Benefit Applicants for, or recipients of, Medicaid benefits administered by CA–DHCS. CA–DHCS will match the following records with DHS–USCIS records:

- Alien Registration Number
- I–94 Number
- Last Name
- First Name
- Middle Name
- Date of Birth
- Nationality
- Social Security number (SSN)

DHS–USCIS will match the following records with CA–DHCS records:

- Alien Registration Number
- Last Name
- First Name
- Middle Name
- Date of Birth
- Country of Birth (not nationality)
- SSN (if available)
- Date of Entry
- Immigration Status Data
- Sponsorship Information (sponsor's full name, SSN, and address)

System of Records: DHS/USCIS–004 Systematic Alien Verification for Entitlements Program System of Records Notice, 77 FR 47415 (August 8, 2012).

Inclusive Dates of the Matching Program: The inclusive dates of the matching program are from December 8, 2016, and continuing for 18 months through June 7, 2018. The matching program may be extended for up to an additional 12 months thereafter, if certain conditions are met.

Address for Receipt of Public Comments or Inquires: Individuals wishing to comment on this matching program or obtain additional information about the program, including requesting a copy of the Computer Matching Agreement between DHS–USCIS and CA–DHCS, may contact:

For general questions please contact: Donald K. Hawkins, 202–272–8030, Privacy Officer, U.S. Citizenship and Immigration Services, Department of Homeland Security, 20 Massachusetts Avenue NW., Washington, DC 20529.

For privacy questions please contact: Jonathan R. Cantor 202–343–1717, Acting Chief Privacy Officer, Privacy Office, Department of Homeland Security, Washington, DC 20528.

Dated: November 1, 2016.

Jonathan R. Cantor,

Acting Chief Privacy Officer, Department of Homeland Security.

[FR Doc. 2016–27144 Filed 11–10–16; 8:45 am]

BILLING CODE 9110–9L–P

DEPARTMENT OF HOUSING AND URBAN DEVELOPMENT

[Docket No. FR- 5849–N–09]

Notice of a Federal Advisory Committee Manufactured Housing Consensus Committee Regulatory Subcommittee Teleconference

AGENCY: Office of the Assistant Secretary for Housing—Federal Housing Commissioner, Department of Housing and Urban Development (HUD).

ACTION: Notice of a Federal Advisory Meeting: Manufactured Housing Consensus Committee (MHCC).

SUMMARY: This notice sets forth the schedule and proposed agenda for a teleconference meeting of the MHCC, Regulatory Subcommittee. The teleconference meeting is open to the public. The agenda provides an opportunity for citizens to comment on the business before the MHCC.

DATES: The teleconference meeting will be held on November 28, 2016, 1:00 p.m. to 4:00 p.m. Eastern Standard Time (EST). The teleconference numbers are: US toll-free: 1–866–622–8461, and Participant Code: 4325434.

FOR FURTHER INFORMATION CONTACT: Pamela Beck Danner, Administrator and Designated Federal Official (DFO), Office of Manufactured Housing Programs, Department of Housing and Urban Development, 451 Seventh Street SW., Room 9166, Washington, DC 20410, telephone 202–708–6423 (this is not a toll-free number). Persons who have difficulty hearing or speaking may access this number via TTY by calling the toll-free Federal Information Relay Service at 800–877–8339.

SUPPLEMENTARY INFORMATION: Notice of this meeting is provided in accordance with the Federal Advisory Committee Act, 5. U.S.C. App. 10(a)(2) through implementing regulations at 41 CFR 102–3.150. The MHCC was established by the National Manufactured Housing Construction and Safety Standards Act of 1974, 42 U.S.C. 5403(a)(3), as amended by the Manufactured Housing Improvement Act of 2000 (Pub. L. 106–569). According to 42 U.S.C. 5403, as amended, the purposes of the MHCC are to:

- Provide periodic recommendations to the Secretary to adopt, revise, and interpret the Federal manufactured housing construction and safety standards in accordance with this subsection;
- Provide periodic recommendations to the Secretary to adopt, revise, and interpret the procedural and enforcement regulations, including

regulations specifying the permissible scope and conduct of monitoring in accordance with subsection (b);

• Be organized and carry out its business in a manner that guarantees a fair opportunity for the expression and consideration of various positions and for public participation.

The MHCC is deemed an advisory committee not composed of Federal employees.

Public Comment: Citizens wishing to make oral comments on the business of the MHCC are encouraged to register by or before November 22, 2016, by contacting Home Innovation Labs, Attention: Kevin Kauffman, 400 Prince Georges Boulevard, Upper Marlboro, MD 20774; or email to: *MHCC@HomeInnovation.com* or call 1–888–602–4663. Written comments are encouraged. The MHCC strives to accommodate citizen comments to the extent possible within the time constraints of the meeting agenda. Advance registration is strongly encouraged. The MHCC will also provide an opportunity for public comment on specific matters before the Regulatory Subcommittee.

Tentative Agenda

November 28, 2016, from 1:00 p.m. to 4:00 p.m. Eastern Standard Time (EST)

I. Call to Order—Chair & DFO

II. Opening Remarks: Subcommittee Chair

III. Roll Call—Administering Organization (AO)

IV. Administrative Announcements—DFO & AO

V. Approval of minutes from October 27, 2016, Meeting

VI. New Business

a. Action Item 8: Foundation Systems Requirements in Freezing Climates

VII. Open Discussion

VIII. Public Comments

IX. Wrap-Up—DFO & AO

X. Adjourn

Dated: November 8, 2016.

Pamela Beck Danner,

Administrator, Office of Manufactured Housing Programs.

[FR Doc. 2016–27347 Filed 11–10–16; 8:45 am]

BILLING CODE 4210–67–P

DEPARTMENT OF HOUSING AND URBAN DEVELOPMENT

[Docket No. FR–5630–N–08]

Rental Assistance Demonstration (RAD) Notice Regarding Fair Housing and Civil Rights Requirements and Relocation Requirements Applicable to RAD First Component—Public Housing Conversions: Solicitation of Comment

AGENCY: Office of the Assistant Secretary for Housing, HUD.

ACTION: Notice.

SUMMARY: HUD has posted, on its RAD Web page, a notice providing guidance regarding fair housing, civil rights, and relocation requirements applicable to the first component of RAD, which were previously addressed by HUD in a notice issued on June 15, 2015. The first component of RAD pertains only to the conversion of public housing units. The purpose of the Civil Rights and Relocations Requirements notice is to provide greater guidance for the application of these important requirements governing RAD. While the updated requirements are available and became effective upon posting, HUD solicits comment on today's notice, with respect primarily to the clarity and comprehensibility of the requirements.

DATES: *Comment Due Date:* December 14, 2016.

ADDRESSES: Interested persons are invited to submit comments regarding this notice. Communications must refer to the above docket number and title. There are two methods for submitting public comments.

1. Submission of Comments by Mail. Comments may be submitted by mail to the Regulations Division, Office of General Counsel, Department of Housing and Urban Development, 451 7th Street SW., Room 10276, Washington, DC 20410–0500.

2. Electronic Submission of Comments. Interested persons may submit comments electronically through the Federal eRulemaking Portal at *www.regulations.gov.* HUD strongly encourages commenters to submit comments electronically. Electronic submission of comments allows the commenter maximum time to prepare and submit a comment, ensures timely receipt by HUD, and enables HUD to make them immediately available to the public. Comments submitted electronically through the *www.regulations.gov* Web site can be viewed by other commenters and interested members of the public. Commenters should follow the instructions provided on that site to submit comments electronically.

No Facsimile Comments. Facsimile (FAX) comments are not acceptable.

Public Inspection of Public Comments. All properly submitted comments and communications submitted to HUD will be available for public inspection and copying between 8 a.m. and 5 p.m. weekdays at the above address. Due to security measures at the HUD Headquarters building, an advance appointment to review the public comments must be scheduled by calling the Regulations Division at 202–708–3055 (this is not a toll-free number). Individuals who are deaf or hard of hearing and individuals with speech impairments may access this number via TTY by calling the Federal Relay Service toll-free at 800–877–8339. Copies of all comments submitted are also available for inspection and downloading at *www.regulations.gov.*

FOR FURTHER INFORMATION CONTACT: Claude Dickson, Office of Recapitalization, Office of Multifamily Housing, Office of Housing, U.S. Department of Housing and Urban Development, Room 6230, email *RAD@HUD.gov,* telephone 202–708–0001 (this is not a toll-free number). For information about this rule, persons with hearing- or speech-impairments may access this number through TTY by calling the Federal Relay Service toll-free at 800–877–8339.

SUPPLEMENTARY INFORMATION:

I. Background

RAD was created in order to give public housing agencies (PHAs) a tool to preserve and improve assisted housing and address the multi-billion dollar nationwide backlog of deferred maintenance. RAD allows public housing agencies to leverage public and private debt and equity in order to reinvest in the public housing stock. In RAD, units move from the public housing program to a Section 8 platform with a long-term contract that, by law, must be renewed. This ensures that the units remain permanently affordable to low-income households. Once transferred to the Section 8 platform, residents continue to pay 30 percent of their income towards the rent and they maintain the same basic rights as they would possess in the public housing program.

On June 15, 2015, HUD issued a comprehensive notice that provided program instructions for RAD, including addressing eligibility and selection criteria. (See *http://portal.hud.gov/hudportal/documents/huddoc?id=PIHNotice_2012–32_*

062015.pdf.) The June 15, 2015 notice itself was an update of prior RAD program notices issued on July 26, 2012, July 2, 2013, and February 6, 2014. The June 15, 2015 notice covered both of the RAD program's two components. (Component 1 applies only to public housing units that may convert to RAD. Component 2 applies to Section 8 Moderate Rehabilitation, Rent Supplement, and Rental Assistance Payment properties that may convert to RAD.) The June 15, 2015 notice addressed fair housing, civil rights, and relocation requirements among the other program instructions. However, given the importance of these requirements, especially as they apply to the types of transactions common in public housing conversions, HUD determined that a notice dedicated solely to fair housing, civil rights, and relocation requirements was appropriate.

Today's relocation notice only addresses RAD Component 1. The notice explains the situations in which HUD is requiring front-end fair housing and civil rights reviews, and provides information regarding the types of information that must be submitted to facilitate HUD's review of certain fair housing and civil rights requirements in connection with public housing conversions under RAD Component 1. The notice also includes guidance regarding relocation requirements under RAD and reiterates key civil rights- and relocation-related statutory and regulatory requirements.

II. Solicitation of Comment

As noted in the Summary of this notice, today's notice is posted and effective but HUD welcomes comments on the notice. The purpose of the notice is to provide greater guidance on compliance with fair housing, civil rights, and relocation requirements. HUD specifically solicits comment on the clarity of the information provided in the notice. In the event HUD makes any changes in response to public comment, HUD will revise the notice and advise the public of any changes made.

Dated: *November 8, 2016.*

Edward L. Golding,

Principal Deputy Assistant, Secretary for Housing.

[FR Doc. 2016–27348 Filed 11–10–16; 8:45 am]

BILLING CODE 4210–67–P

DEPARTMENT OF THE INTERIOR

Fish and Wildlife Service

[FWS–R4–ES–2016–N124; FXES1130400000C2–167–FF04E00000]

Endangered and Threatened Wildlife and Plants; Final Recovery Plan for the Laurel Dace

AGENCY: Fish and Wildlife Service, Interior.

ACTION: Notice of availability.

SUMMARY: We, the Fish and Wildlife Service (Service), announce the availability of the final recovery plan for the endangered laurel dace, a small fish native to the Tennessee River Basin in Tennessee. The recovery plan includes specific recovery objectives and criteria that must be met in order for us to downlist the fish to threatened status or delist it under the Endangered Species Act of 1973, as amended.

ADDRESSES: You may obtain a copy of the recovery plan from our Web site at *http://www.fws.gov/endangered/species/recovery-plans.html* or the Tennessee Field Office Web site at *http://www.fws.gov/cookeville.* You may also request a copy of the recovery plan by contacting Geoff Call, by U.S. mail at U.S. Fish and Wildlife Service, Tennessee Field Office, 446 Neal Street, Cookeville, TN 38501 (telephone 931–525–4983).

FOR FURTHER INFORMATION CONTACT: Geoff Call (see **ADDRESSES**).

SUPPLEMENTARY INFORMATION:

Background

Recovery Plans Under the Endangered Species Act

Recovery of endangered or threatened animals and plants to the point where they are again secure, self-sustaining members of their ecosystems is a primary goal of our endangered species program and the Endangered Species Act of 1973, as amended (Act; 16 U.S.C. 1531 *et seq.*). Recovery means improvement of the status of listed species to the point at which listing is no longer needed under any criteria specified in section 4(a)(1) of the Act. To help guide the recovery effort, we prepare recovery plans for most listed species. Recovery plans describe actions considered necessary for conservation of the species, establish criteria for downlisting or delisting, and estimate time and cost for implementing recovery measures. The Act requires the development of recovery plans for listed species, unless such a plan would not promote the conservation of a particular species.

About the Species

We listed the laurel dace (*Chrosomus saylori*) as an endangered species under the Act on August 9, 2011 (76 FR 48722), and designated critical habitat for the species on October 16, 2012 (77 FR 63604). The laurel dace is a small fish native to the Tennessee River Basin in Tennessee. This fish, from the family Cyprinidae, is found or collected from pools or slow runs from undercut banks or under slab boulders in headwater tributaries. The vegetation surrounding the first or second order streams where laurel dace occur includes mountain laurel, rhododendron, and hemlocks.

Historically, laurel dace is known from seven streams, and it currently occupies six of these, in three creek systems on the Walden Ridge of the Cumberland Plateau. Only a few individuals have been collected from headwaters of the two creek systems in the southern part of their range, Soddy and Sale Creeks, although laurel dace are more abundant in headwaters of the Piney River system in their northern range. Threats to the laurel dace include land use activities that affect silt levels, temperature, or hydrologic processes of these small tributaries; invasive species, including sunfishes, basses, and hemlock woolly adelgid; the species' naturally small population size and geographic range; and climate change.

Recovery Plan Development

Section 4(f) of the Act requires us to provide public notice and an opportunity for public review and comment prior to final approval of recovery plans. We and other Federal agencies will take these public comments into account in the course of implementing approved recovery plans.

The Technical/Agency Draft Recovery Plan for the Laurel Dace was developed by the Tennessee Field Office. This draft plan was published on January 14, 2015, and made available for public comment through March 16, 2015 (79 FR 1933). We received no comments from the general public on the draft plan.

The Service also asked four peer reviewers to review and provide comments on the draft plan. We received comments from all four peer reviewers: Dr. J. Brian Alford of University of Tennessee, Dr. Hayden T. Mattingly of Tennessee Tech University, Dr. Christopher E. Skelton of Georgia College and State University, and Mr. Mark Thurman of the Tennessee Wildlife Resources Agency. All of the peer reviewers offered general support and praise for the draft plan. For a summary of our responses to peer review comments, see Appendix A in

the final recovery plan. We considered the information we received from peer reviewers in our preparation and approval of this final recovery plan. Specifically, we made a slight modification to recovery criteria (see below) by adding the clarification of 500 individuals in the definition of a viable population. We also adjusted budgets of recovery actions in the implementation schedule.

Recovery Plan Components

Objectives for Reclassification to Threatened and Delisting

The goal of this recovery plan is to conserve populations of laurel dace and enable the species to recover to the point that listing under the Act is no longer necessary. Because recovery and delisting will take a long time to achieve, and may be unachievable, an intermediate goal of this recovery plan is to reduce threats to the point that the species could be reclassified from endangered to threatened.

Reclassification to Threatened

Reclassification of the laurel dace to threatened status will be possible when habitat conditions in occupied streams are suitable for the conservation of the species, and viable populations are present throughout suitable habitat in five of the six currently occupied streams.

Delisting

In order for the laurel dace to recover to the point that listing under the Act is no longer necessary, it will be necessary to conserve all existing populations by maintaining, and in some cases restoring, suitable habitat conditions in all streams where the species currently occurs. It will also be necessary to discover or establish one additional population.

Criteria for Reclassification From Endangered to Threatened or Delisting

The following criteria will be used to determine whether the objectives for reclassification and delisting described above have been met. The criteria will be achieved by reducing or removing threats to the species' habitat and conserving or establishing viable populations throughout the species' range, as determined by monitoring of demographic and genetic parameters.

Criteria for Reclassification From Endangered to Threatened

Criterion 1: Suitable instream habitat, flows, and water quality for laurel dace, as defined by Recovery Tasks in the recovery plan, exist in occupied streams.

Criterion 2: Viable populations * are present throughout suitable habitat in Bumbee, Moccasin, and Youngs Creeks, and at least two of the following streams: Soddy Creek, Cupp Creek or Horn Branch.

Criteria for Delisting

Criterion 1: Suitable instream habitat, flows, and water quality for laurel dace exist in all occupied streams, and mechanisms exist to ensure that land use activities (including road maintenance) in catchments of streams inhabited by laurel dace will be compatible with the species' conservation for the foreseeable future. Such mechanisms could include, but are not necessarily limited to, conservation agreements, conservation easements, land acquisition, and habitat conservation plans.

Criterion 2: Viable populations * are present throughout suitable habitat in Bumbee, Moccasin, Youngs, Soddy, and Cupp Creeks and Horn Branch, and one additional viable population, created either through reintroduction into Laurel Branch or by discovery of an additional wild population.

* Populations will be considered viable when the following demographic and genetic conditions exist:

- Demographics—Monitoring data demonstrate that (a) populations are stable or increasing, (b) average census size is at least 500 individuals and two or more age-classes are consistently present over a period of time encompassing five generations (*i.e.,* 15 years), and (c) evidence of recruitment is not absent in more than 3 years or during consecutive years at any point within that period of time.

- Genetics—Populations will be considered to have sufficient genetic variation to be viable if measurements of observed number of alleles and estimates of heterozygosity and effective population size have remained stable or increased during the five generations used to establish demographic viability.

Authority

The authority for this action is section 4(f) of the Endangered Species Act, 16 U.S.C. 1533(f).

Dated: August 22, 2016.

Mike Oetker,

Acting Regional Director, Southeast Region.

[FR Doc. 2016–27272 Filed 11–10–16; 8:45 am]

BILLING CODE 4333–15–P

DEPARTMENT OF THE INTERIOR

Fish and Wildlife Service

[FWS–R6–R–2016–N040; FF06R06000–FXRS12610600000–167]

National Elk Refuge, Teton County, Wyoming; Final Comprehensive Conservation Plan and Finding of No Significant Impact for Environmental Assessment

AGENCY: Fish and Wildlife Service, Interior.

ACTION: Notice of availability.

SUMMARY: We, the U.S. Fish and Wildlife Service (Service), announce the availability of a final comprehensive conservation plan (CCP) and finding of no significant impact (FONSI) for the environmental assessment (EA) for the National Elk Refuge (Refuge, NWR). In this final CCP, we describe how we intend to manage the refuge for the next 15 years.

ADDRESSES: You will find the final CCP, a summary of the final CCP, and the EA/FONSI on the planning Web site: *http://www.fws.gov/mountain-prairie/refuges/wy_ner.php.* A limited number of hard copies and CD–ROMs are available. You may request one by any of the following methods:

- *Email: nationalelkrefuge@fws.gov.* Include ''National Elk Refuge CCP'' in the subject line of the message.
- *U.S. Mail:* National Elk Refuge, P.O. Box 510, Jackson, WY, 83001.

FOR FURTHER INFORMATION CONTACT: Steve Kallin, Refuge Manager, at 307–733–9212 (phone), or Toni Griffin, Planning Team Leader, 303–236–4378 (phone) or *toni_griffin@fws.gov* (email).

SUPPLEMENTARY INFORMATION:

Introduction

With this notice, we continue the CCP process for the National Elk Refuge, which we began by publishing a notice of intent in the **Federal Register** (75 FR 65370) on October 22, 2010. For more about the initial process and the history of this refuge, see that notice. We released the draft CCP and EA to the public, announcing and requesting comments in a notice of availability (79 FR 53440) on September 9, 2014. The 45-day comment period ended on October 24, 2014. A summary of public comments and the agency responses is included in the final CCP.

Background

The National Wildlife Refuge System Administration Act of 1966, as amended by the National Wildlife Refuge System Improvement Act of 1997 (16 U.S.C. 668dd–668ee) (Administration Act),

requires us to develop a CCP for each national wildlife refuge. The purpose in developing a CCP is to provide refuge managers with a 15-year strategy for achieving refuge purposes and contributing toward the mission of the National Wildlife Refuge System (NWRS), consistent with sound principles of fish and wildlife management, conservation, legal mandates, and Service policies. In addition to outlining broad management direction on conserving wildlife and their habitats, CCPs identify wildlife-dependent recreational opportunities available to the public, including opportunities for hunting, fishing, wildlife observation and photography, and environmental education and interpretation. We will review and update the CCP at least every 15 years in accordance with the Administration Act.

Each unit of the NWRS was established for specific purposes. We use these purposes as the foundation for developing and prioritizing the management goals and objectives for each refuge within the NWRS mission, and to determine how the public can use each refuge. The planning process is a way for us and the public to evaluate management goals and objectives that will ensure the best possible approach to wildlife, plant, and habitat conservation, while providing for wildlife-dependent recreation opportunities that are compatible with each refuge's establishing purposes and the mission of the NWRS.

Additional Information

The final CCP may be found at *http://www.fws.gov/mountain-prairie/refuges/wy_ner.php*. The final CCP includes detailed information about the planning process, refuge, issues, and management alternative selected. The Web site also includes an EA, prepared in accordance with the National Environmental Policy Act (NEPA) (43 U.S.C. 4321 *et seq.*). The EA includes discussion of four alternative refuge management options. The Service's selected alternative is reflected in the final CCP, and also in the FONSI.

The selected alternative focuses on habitat and wildlife management that allow for natural processes to promote habitats. Some habitats, such as wetlands, will be managed to enhance swan habitat and improve forage quantity and quality for elk and bison. The refuge will increase opportunities for wildlife-dependent public uses such as hunting, fishing, wildlife observation and photography, and environmental education. We will keep some areas undeveloped, return some areas to a natural state, and increase development in other areas to enhance visitor services. A detailed description of objectives and actions included in this selected alternative is found in chapter 4 of the final CCP.

Dated: September 23, 2016.

Noreen Walsh,

Regional Director, Mountain-Prairie Region, U.S. Fish and Wildlife Service.

[FR Doc. 2016–27268 Filed 11–10–16; 8:45 am]

BILLING CODE 4333–15–P

DEPARTMENT OF THE INTERIOR

Geological Survey

[GX17EE000101100]

Announcement of National Geospatial Advisory Committee Meeting

AGENCY: U.S. Geological Survey, Interior.

ACTION: Notice of meeting

SUMMARY: The National Geospatial Advisory Committee (NGAC) will meet on December 14, 2016, from 12:30 p.m. to 4:00 p.m. EST. The meeting will be held via web conference and teleconference.

The NGAC, which is composed of representatives from governmental, private sector, non-profit, and academic organizations, has been established to advise the Chair of the Federal Geographic Data Committee on management of Federal geospatial programs, the development of the National Spatial Data Infrastructure, and the implementation of Office of Management and Budget (OMB) Circular A–16. Topics to be addressed at the meeting include:

—FGDC Update
—NGAC Subcommittee Reports
—Review of NGAC Papers
—Transition Planning
—Planning for 2017 NGAC Activities

Members of the public who wish to attend the meeting must register in advance. Please register by contacting Lucia Foulkes at the Federal Geographic Data Committee (703–648–4142, *lfoulkes@usgs.gov*). Meeting registrations are due by December 9, 2016. Meeting information (web conference and teleconference instructions) will be provided to registrants prior to the meeting. While the meeting will be open to the public, attendance may be limited due to web conference and teleconference capacity.

The meeting will include an opportunity for public comment. Attendees wishing to provide public comment should register by December 9. Please register by contacting Lucia Foulkes at the Federal Geographic Data Committee (703–648–4142, *lfoulkes@usgs.gov*). Comments may also be submitted to the NGAC in writing.

DATES: The meeting will be held on December 14, 2016, from 12:30 p.m. to 4:00 p.m. EST.

FOR FURTHER INFORMATION CONTACT: John Mahoney, U.S. Geological Survey (206–220–4621).

SUPPLEMENTARY INFORMATION: Meetings of the National Geospatial Advisory Committee are open to the public. Additional information about the NGAC and the meeting are available at *www.fgdc.gov/ngac.*

Kenneth Shaffer,

Deputy Executive Director, Federal Geographic Data Committee.

[FR Doc. 2016–27285 Filed 11–10–16; 8:45 am]

BILLING CODE 4338–11–P

DEPARTMENT OF THE INTERIOR

Bureau of Land Management

[LLCO956000 L71300000.BJ0000 LVTSC1600100 16X]

Notice of Filing of Plats of Survey; Colorado

AGENCY: Bureau of Land Management, Interior.

ACTION: Notice of filing of plats of survey; Colorado.

SUMMARY: The Bureau of Land Management (BLM) Colorado State Office is publishing this notice to inform the public of the official filing of the survey plat listed below. The plat will be available for viewing in the BLM Colorado State Office.

DATES: The plat described in this notice was filed on November 4, 2016.

ADDRESSES: BLM Colorado State Office, Cadastral Survey, 2850 Youngfield Street, Lakewood, CO 80215–7093.

FOR FURTHER INFORMATION CONTACT: Randy Bloom, Chief Cadastral Surveyor for Colorado, (303) 239–3856.

Persons who use a telecommunications device for the deaf (TDD) may call the Federal Relay Service (FRS) at 1–800–877–8339 to contact the above individual during normal business hours. The FRS is available 24 hours a day, seven days a week, to leave a message or question with the above individual. You will receive a reply during normal business hours.

SUPPLEMENTARY INFORMATION: The supplemental plat in Township 11 South, Range 69 West, Sixth Principal

Meridian, Colorado, was accepted on October 27, 2016, and filed on November 4, 2016.

Randy A. Bloom,

Chief Cadastral Surveyor for Colorado.

[FR Doc. 2016–27270 Filed 11–10–16; 8:45 am]

BILLING CODE 4310–JB–P

DEPARTMENT OF THE INTERIOR

National Park Service

[NPS–WASO–NRNHL–22242;PPWOCRADI0, PCU00RP14.R50000]

National Register of Historic Places; Notification of Pending Nominations and Related Actions

AGENCY: National Park Service, Interior.

ACTION: Notice.

SUMMARY: The National Park Service is soliciting comments on the significance of properties nominated before October 15, 2016, for listing or related actions in the National Register of Historic Places.

DATES: Comments should be submitted by November 29, 2016.

ADDRESSES: Comments may be sent via U.S. Postal Service to the National Register of Historic Places, National Park Service, 1849 C St. NW., MS 2280, Washington, DC 20240; by all other carriers, National Register of Historic Places, National Park Service, 1201 Eye St. NW., 8th Floor, Washington, DC 20005; or by fax, 202–371–6447.

SUPPLEMENTARY INFORMATION: The properties listed in this notice are being considered for listing or related actions in the National Register of Historic Places. Nominations for their consideration were received by the National Park Service before October 15, 2016. Pursuant to section 60.13 of 36 CFR part 60, written comments are being accepted concerning the significance of the nominated properties under the National Register criteria for evaluation.

Before including your address, phone number, email address, or other personal identifying information in your comment, you should be aware that your entire comment—including your personal identifying information—may be made publicly available at any time. While you can ask us in your comment to withhold your personal identifying information from public review, we cannot guarantee that we will be able to do so.

COLORADO

Denver County

Fort Logan National Cemetery, 3698 S. Sheridan Blvd., Denver, 16000810

DISTRICT OF COLUMBIA

District of Columbia

National Mall Historic District (Boundary Increase), Bounded by 3rd St. NW–SW., Independence Ave. SW., Raoul Wallenberg Pl. SW., CSX RR, Potomac R., Constitution Ave. NW., Washington, 16000805

IDAHO

Idaho County

Big Cedar School, 947 Red Fir Rd., Kooskia, 16000806

MONTANA

Yellowstone County

North Elevation Historic District, Bounded by 12th Ave. N., alley between N. 31st & 30th Sts., 9th Ave. N. & 32ns St. N., Billings, 16000807

NORTH CAROLINA

Swain County

Mingus Mill, (Great Smoky Mountains National Park MPS) Newfound Gap Rd., Great Smoky Mts. NP., Cherokee, 16000808

Oconaluftee Ranger Station, (Great Smoky Mountains National Park MPS) Newfound Gap Rd., Great Smoky Mts. NP., Cherokee, 16000809

TENNESSEE

Campbell County

LaFollette Coke Ovens, Ivydale & Water Plant Rds., Coke Oven Ln., LaFollette, 16000811

Shelby County

Memphis Federation of Musicians Local 71 Building, 944 Philadelphia St., Memphis, 16000812

WISCONSIN

Green County

Ten Eyck, Albert and Minna, Round Barn, (Wisconsin Centric Barns MPS) W968 WI 11, Spring Grove, 16000813

A request for removal has been received for the following resources:

LOUISIANA

Concordia Parish

Campbell, Sheriff Eugene P., House, 2 Concordia Ave., Vidalia, 79001058

East Baton Rouge Parish

Planter's Cabin, 7815 Highland Rd., Baton Rouge, 84001279

Evangeline Parish

Dardeau Building, 224 W. Main, Ville Platte, 82002771

Franklin Parish

Chennault House, LA 15 S. of Gilbert, Gilbert, 83000505

Iberia Parish

Lamperez, Santiago, House, 203 Front St., New Iberia, 85003147

Jefferson Davis Parish

Fruge Store, 907 Main St., Elton, 94001176

Lincoln Parish

Vicksburg, Shreveport and Pacific Depot, 101 E. Railroad Ave., Ruston, 92001337

Pointe Coupee Parish

LaCour, Ovide, Store, LA 419, LaCour, 79001080

Franklin Parish

Chennault House, LA 15 S. of Gilbert, Gilbert, 83000505

Rapides Parish

Hopson House, Brown's Bend Rd., Alexandria, 84000549

Overton, Senator John H., House, 1128 8th St., Alexandria, 85001584

Oxland, Cty. Rd. 1202, Alexandria, 84000551

Red River Parish

Planter's Hotel, Carroll St., Coushatta, 80001758

Authority: 60.13 of 36 CFR part 60.

Dated: October 21, 2016.

Julie H. Ernstein,

Acting Chief, National Register of Historic Places/National Historic Landmarks Program.

[FR Doc. 2016–27241 Filed 11–10–16; 8:45 am]

BILLING CODE 4312–52–P

DEPARTMENT OF THE INTERIOR

National Park Service

[NPS–WASO–NRNHL–22204; PPWOCRADI0, PCU00RP14.R50000]

National Register of Historic Places; Notification of Pending Nominations and Related Actions

AGENCY: National Park Service, Interior.

ACTION: Notice.

SUMMARY: The National Park Service is soliciting comments on the significance of properties nominated before October 8, 2016, for listing or related actions in the National Register of Historic Places.

DATES: Comments should be submitted by November 29, 2016.

ADDRESSES: Comments may be sent via U.S. Postal Service to the National Register of Historic Places, National Park Service, 1849 C St. NW., MS 2280, Washington, DC 20240; by all other carriers, National Register of Historic Places, National Park Service, 1201 Eye St. NW., 8th Floor, Washington, DC 20005; or by fax, 202–371–6447.

SUPPLEMENTARY INFORMATION: The properties listed in this notice are being considered for listing or related actions in the National Register of Historic Places. Nominations for their consideration were received by the National Park Service before October 8, 2016. Pursuant to section 60.13 of 36 CFR part 60, written comments are being accepted concerning the

significance of the nominated properties under the National Register criteria for evaluation.

Before including your address, phone number, email address, or other personal identifying information in your comment, you should be aware that your entire comment—including your personal identifying information—may be made publicly available at any time. While you can ask us in your comment to withhold your personal identifying information from public review, we cannot guarantee that we will be able to do so.

ARIZONA

Maricopa County

Cook, Neil and Louise, House, (North Central Phoenix Farmhouses and Rural Estate Homes, 1895–1959), 5725 North 20th Pl., Phoenix, 16000782

COLORADO

Gunnison County

Marble Jailhouse, 209 E. State St., Marble, 16000783

Larimer County

Schlichter, E.A., House, 1312 S. College Ave., Fort Collins, 16000784

ILLINOIS

Vermilion County

United States Post Office and Court House, 201 North Vermilion St., Danville, 16000785

MAINE

York County

Timber Point, 2 Timber Point Rd., Rachel Carson National Wildlife Refuge, Biddeford, 16000786

RHODE ISLAND

Providence County

Edgewood Historic District—Sally Greene Homestead Plats, (Edgewood Neighborhood, Cranston, R.I. MPS) Fairview and Glen Aves., Harbour Terr., Hudson Pl., Massasoit Ave., and portions of Broad St. & Narragansett Blvd., Cranston, 16000787

TENNESSEE

Knox County

Giffin Grammar School, 1834 Beech St., Knoxville, 16000788

Marion County

Marion Post No. 62, 300 Elm Ave., South Pittsburg, 16000789

Sevier County

Shults Grove Methodist Church, Rocky Flats Rd. at East Ball Hollow Rd., Cosby, 16000790

VERMONT

Addison County

Stone, Ruth, House, 788 Hathaway Rd., Goshen, 16000791

VIRGINIA

Accomack County

Locustville Academy, 28055 Drummondtown Rd., Locustville, 16000792

Amherst County

Elon Village Library, Corner of Younger Dr. (VA 703) and Camden Dr. (VA 797), Elon, 16000793

Botetourt County

Blue Ridge Hall, 11593 Lee Hwy., Fincastle, 16000794

Reynolds Property, 514 Rocky Rd., Buchanan, 16000795

Essex County

Edenetta, 6514 Tidewater Trail, Chance, 16000796

Frederick County

Springdale, 1663 Apple Pie Ridge Rd., Winchester, 16000797

Hampton Independent city

Hampton National Guard Armory, 504 North King St.,

Orange County

Mount Calvary Baptist Church, 11229 Kendall Rd., Orange, 16000799

Richmond Independent city

Virginia Commission for the Blind, 3003 Parkwood Ave., Richmond, 16000800

Suffolk Independent city

Suffolk Peanut Company, The, 303 South Saratoga St., Suffolk, 16000801

Wythe County

Reed Creek Mill, 1565 S. Church St., Wytheville, 16000802

WISCONSIN

Rusk County

McFarlane, Harold J. and Angus, Stone House and Barn, N6435 Hackett Rd., Town of Hawkins, 16000803

Authority: 60.13 of 36 CFR part 60.

Dated: November 7, 2016.

J. Paul Loether,

Chief, National Register of Historic Places/National Historic Landmarks Program.

[FR Doc. 2016–27242 Filed 11–10–16; 8:45 am]

BILLING CODE 4312–52–P

INTERNATIONAL TRADE COMMISSION

[USITC SE–16–037]

Government in the Sunshine Act Meeting Notice

AGENCY HOLDING THE MEETING: United States International Trade Commission.

TIME AND DATE: November 18, 2016 at 11:00 a.m.

PLACE: Room 101, 500 E Street SW., Washington, DC 20436, Telephone: (202) 205–2000.

STATUS: Open to the public.

MATTERS TO BE CONSIDERED:

1. Agendas for future meetings: None.
2. Minutes.
3. Ratification List.
4. Vote in Inv. Nos. 701–TA–549 and 731–TA–1299–1300 and 1302–1303 (Final)(Circular Welded Carbon-Quality Steel Pipe from Oman, Pakistan, the United Arab Emirates, and Vietnam). The Commission is currently scheduled to complete and file its determinations and views of the Commission by December 12, 2016.
5. Vote in Inv. Nos. 701–TA–550 and 731–TA–1304–1305 (Final)(Iron Mechanical Transfer Drive Components from Canada and China). The Commission is currently scheduled to complete and file its determinations and views of the Commission by December 12, 2016.
6. Outstanding action jackets: None.

In accordance with Commission policy, subject matter listed above, not disposed of at the scheduled meeting, may be carried over to the agenda of the following meeting.

By order of the Commission:

Issued: November 9, 2016.

William R. Bishop,

Supervisory Hearings and Information Officer.

[FR Doc. 2016–27408 Filed 11–9–16; 11:15 am]

BILLING CODE 7020–02–P

INTERNATIONAL TRADE COMMISSION

[Investigation No. 337–TA–1028]

Certain Mobile Device Holders and Components Thereof; Institution of Investigation

AGENCY: U.S. International Trade Commission.

ACTION: Notice.

SUMMARY: Notice is hereby given that a complaint was filed with the U.S. International Trade Commission on October 6, 2016, under section 337 of the Tariff Act of 1930, as amended, 19 U.S.C. 1337, on behalf of Nite Ize, Inc. of Boulder, Colorado. Supplements to the complaint were filed on October 21, 2016 and October 26, 2016. The complaint, as supplemented, alleges violations of section 337 based upon the importation into the United States, the sale for importation, and the sale within the United States after importation of certain mobile device holders and components thereof by reason of infringement of certain claims of U.S. Patent No. 8,602,376 (''the '376 patent''); U.S. Patent No. 8,870,146 (''the '146

patent''); U.S. Patent No. D734,746 (''the '746 patent''); and U.S. Patent No. D719,959 (''the '959 patent''). The complaint further alleges that an industry in the United States exists as required by subsection (a)(2) of section 337.

The complainant requests that the Commission institute an investigation and, after the investigation, issue a general exclusion order, or in the alternative a limited exclusion order, and cease and desist orders.

ADDRESSES: The complaint, except for any confidential information contained therein, is available for inspection during official business hours (8:45 a.m. to 5:15 p.m.) in the Office of the Secretary, U.S. International Trade Commission, 500 E Street, SW., Room 112, Washington, DC 20436, telephone (202) 205–2000. Hearing impaired individuals are advised that information on this matter can be obtained by contacting the Commission's TDD terminal on (202) 205–1810. Persons with mobility impairments who will need special assistance in gaining access to the Commission should contact the Office of the Secretary at (202) 205–2000. General information concerning the Commission may also be obtained by accessing its internet server at *https://www.usitc.gov.* The public record for this investigation may be viewed on the Commission's electronic docket (EDIS) at *https://edis.usitc.gov.*

FOR FURTHER INFORMATION CONTACT: The Office of Unfair Import Investigations, U.S. International Trade Commission, telephone (202) 205–2560.

AUTHORITY: The authority for institution of this investigation is contained in section 337 of the Tariff Act of 1930, as amended, and in section 210.10 of the Commission's Rules of Practice and Procedure, 19 CFR 210.10 (2016).

SCOPE OF INVESTIGATION: Having considered the complaint, the U.S. International Trade Commission, on November 7, 2016, ORDERED THAT—

(1) Pursuant to subsection (b) of section 337 of the Tariff Act of 1930, as amended, an investigation be instituted to determine whether there is a violation of subsection (a)(1)(B) of section 337 in the importation into the United States, the sale for importation, or the sale within the United States after importation of certain mobile device holders and components thereof by reason of infringement of one or more of claims 1, 11, and 12 of the '376 patent; claims 1, 11, and 12 of the '146 patent; claim 1 of the '746 patent; claim 1 of the '959 patent, and whether an industry in the United States exists as required by subsection (a)(2) of section 337;

(2) For the purpose of the investigation so instituted, the following are hereby named as parties upon which this notice of investigation shall be served:

(a) The complainant is: Nite Ize, Inc., 5660 Central Avenue, Boulder, CO 80301.

(b) The respondents are the following entities alleged to be in violation of section 337, and are the parties upon which the complaint is to be served:

Shenzhen Youtai Trade Company Limited, d/b/a NoChoice, Room 813, Gelinwangyuan o. 96 Yannan Road, Futian District Shenzhen, Guangdong, China, 518000

REXS LLC, 16192 Coastal Highway, Lewes, DE 19958

Spinido, Inc., 36 South 18th Avenue, Suite A, Brighton, CO 80601

Luo, Qiben, d/b/a Lita International Shop, No. 10, Gaoxin South Four Road, Nanshan Shenzhen, China 518057

Guangzhou Kuaguoyi E-commerce co., ltd. d/b/a Kagu Culture, C102, Mingzhu Creative Park No.66, Xiaogang Garden Rd, Yuncheng Street Baiyun, Guangzhou China, 510000

Shenzhen New Dream Technology Co., Ltd., d/b/a Newdreams, Room 307, Haotai building Baomin Second Road NO.1, Xixiang Street Bao'an, Shenzhen, China, 518102 Shenzhen Gold South Technology Co., Ltd. d/b/a Baidatong, Room 616, West Of 6/F, Bldg. 102, Pengji Shangbu Industrial Workshop, Shangbu Industrial Zone, North Huaqiang Road, Futian District, Shenzhen, Guangdong, China, 518028

Sunpauto Co., ltd, Unit 04, 7/F, Bright Way Tower, NO.33 Mong Kok Road, Kowloon, HK

Wang Zhi Gang d/b/a IceFox, Room 806,Ge Lin Wang Yuan YanNan Road, Futian District Shenzhen, China, 518000

Dang Yuya d/b/a Sminiker, No.5, Jinlongsan Rd., Longgang District Shenzhen, China, 518100

Shenzhen Topworld Technology Co. d/b/a IdeaPro, RM603, 6/F Hang Pont Comm Bldg. 31 Tonk In St., Cheung Sha Wan Kln, Hong Kong, Hong Kong

Lin Zhen Mei d/b/a Anson 502, B Seat, 3 Building, Guandi Garden Xian N7 area, Jiaan west Rd, Baoan Dist. Shenzhen, Guangdong, China 518128

Wu Xuying d/b/a Novoland No. 2336 Nanhai Road, Nanshan District Shenzhen, China, 518054

Shenzhen New Dream Sailing Electronic Technology Co., Ltd. d/b/a MegaDream Room 1006, Modern International Mansion Jintian Road, Futian District, Shenzhen, Guangdong, China, 518048

Zhongshan Feiyu Hardware Technology Co., Ltd d/b/a YouFo 13# Haotong Road, Minle Community, Yongle Village DongFeng Town, ZhongShan City Guangdong, China, 528400

Ninghuaxian Wangfulong Chaojishichang Youxian Gongsi, Ltd., d/b/a EasybuyUS RM 101, NO.12, 250 Lane, Kangshen Road, Pudong, Xinqu Shanghai, China, 201315

Chang Lee d/b/a Frentaly, 1795 Morningdale Circle, Duluth, GA 30097

Trendbox USA LLC d/b/a Trendbox, 16419 North 91st Street, Suite 125, Scottsdale, AZ 85260

Tontek d/b/a Shenzhen Hetongtai Electronics Co., Ltd., B1505, Niulanqian Bldg., Minzhi Street, Longhua New Area, Shenzhen, Guangdong, China, 518000

Scotabc d/b/a ShenChuang Opto-electronics Technology Co., Ltd., Rm.1203A, Zhanyuan Business Bldg, NO.912 Meilong Rd., Longhua town, Longhua Dist. Shenzhen, Guangdong, China, 068100

Tenswall d/b/a Shenzhen Tenswall International Trading Co., Ltd., 14837 Proctor Ave Ste A, La Puente, CA 91746

Luo Jieqiong d/b/a Wekin Room 1602, Building 20 Hua Sheng Shi Ji, Xin Cheng Yu Hua Dist Chang Sha, China, 410100

Pecham d/b/a Baichen Technology Ltd., RM 20A, Kiu Fu Comm Bldg 300 Lockhart Rd. Wan Chai, Hong Kong

Cyrift d/b/a Guangzhou Sunway E-Commerce LLC., D202 Guangzhou Trade Business Center, Guangzhou, China, 510000

Rymemo d/b/a Global Box, LLC., 310 Ferguson Rd, Dunbar, PA 15431

Wang Guoxiang d/b/a Minse, Rm 609, Block 2, Xinghu Garden No.9 Jinbi Rd, Luohu Dist Shenzhen, Guangdong, China, 518028

Yuan I d/b/a Bestrix, No. 10, Group 1 Qingyuan Street, Wangying Town Lichuan City, Hubei, China, 445400 Zhiping Zhou d/b/a Runshion 31F, Dong C, Jinganghuating, Baoandadao, Baoanqu Shenzhenshi, Guangdong, China, 518000

Huijukon d/b/a Shenzhen Hui Ju Kang Technology Co. Ltd., #1218 Lianhua Building No2008, Shennan Middle Street, Futian Dist Shenzhen, China, 518000

Barsone d/b/a Shenzhen Senweite Electronic Commerce Ltd., Rm 201, Building A, No.1 Qianwan 1st Rd Qianhai SZ–HK Cooperation Zone Shenzhen City, China, 518103

Oumeiou d/b/a Shenzhen Oumeiou Technology Co., Ltd., F3 Comprehensive Bldg of Nankeng 2nd

Industrial Park, Bantian Street, Longgang Shenzhen, China, 518112

Grando d/b/a Shenzhen Dashentai Network Technology Co., Ltd., 806 Dongbian Building No.222 Minzhi Road, Minzhi Street Longhuaxinqu, Shenzhen, China, 518109

Shenzhen Yingxue Technology Co., Ltd., Room 14H, Haojingmingyuan Phase II No.28 Zhengqing Road, Buji Town, Longgang District, Shenzhen, China, 518112

Shenzhen Longwang Technology Co., Ltd., d/b/a LWANG B21, 5/F, West Of Bldg. 4, Seg Tech Park, Huaqiang North Rd., Futian Dist., Shenzhen, Guangdong, China, 518000

Hu Peng d/b/a AtomBud Room 602, Unit 1, Dongfangqinyuan 2 Pingan Road, Longgang District Shenzhen, China, 518112

(c) The Office of Unfair Import Investigations, U.S. International Trade Commission, 500 E Street, SW., Suite 401, Washington, DC 20436; and

(3) For the investigation so instituted, the Chief Administrative Law Judge, U.S. International Trade Commission, shall designate the presiding Administrative Law Judge.

Responses to the complaint and the notice of investigation must be submitted by the named respondents in accordance with section 210.13 of the Commission's Rules of Practice and Procedure, 19 CFR 210.13. Pursuant to 19 CFR 201.16(e) and 210.13(a), such responses will be considered by the Commission if received not later than 20 days after the date of service by the Commission of the complaint and the notice of investigation. Extensions of time for submitting responses to the complaint and the notice of investigation will not be granted unless good cause therefor is shown.

Failure of a respondent to file a timely response to each allegation in the complaint and in this notice may be deemed to constitute a waiver of the right to appear and contest the allegations of the complaint and this notice, and to authorize the administrative law judge and the Commission, without further notice to the respondent, to find the facts to be as alleged in the complaint and this notice and to enter an initial determination and a final determination containing such findings, and may result in the issuance of an exclusion order or a cease and desist order or both directed against the respondent.

By order of the Commission.

Issued: November 7. 2016.

Lisa R. Barton,

Secretary to the Commission.

[FR Doc. 2016–27251 Filed 11–10–16; 8:45 am]

BILLING CODE 7020–02–P

DEPARTMENT OF JUSTICE

Notice of Lodging of Proposed Consent Decree Under the Comprehensive Environmental Response, Compensation, and Liability Act

On November 1, 2016, the Department of Justice lodged a proposed consent decree with the United States District Court for the District of Arizona in the lawsuit entitled *United States* v. *WestRock CP, LLC,* Civil Action No. CV–16–08247–PCT–PGR.

The United States alleged that WestRock CP, LLC—as the successor to Southwest Forest Industries, Inc.—is liable under Section 107 of the Comprehensive Environmental Response, Compensation, and Liability Act (CERCLA), 42 U.S.C. 9607, for reimbursement of response costs incurred or to be incurred by the U.S. Environmental Protection Agency in connection with releases or threatened releases of hazardous substances into the environment at or from land associated with a former wood-treating facility located approximately 1 mile northeast of Prescott, Arizona and on the Yavapai-Prescott Indian reservation. To date, unreimbursed response costs have totaled approximately $6.2 million. Under the proposed consent decree and consistent with an earlier bankruptcy settlement agreement, the United States will be allowed a general unsecured claim in the sum of $2.8 million in the Chapter 11 bankruptcy case involving WestRock CP, LLC's predecessor Smurfit-Stone Container Corporation. The allowed claim will be satisfied as a cash distribution of $1,602,877.46; 56,064 shares of WestRock Company stock; and 9,344 shares of Ingevity Corporation stock. In return, the United States covenants not to sue or take administrative action against WestRock CP, LLC pursuant to Sections 106 and 107(a) of CERCLA, 42 U.S.C. 9606 and 9607(a), and Section 7003 of the Resource Conservation and Recovery Act (RCRA), 42 U.S.C. 6973, regarding the site.

The publication of this notice opens a period for public comment on the consent decree. Comments should be addressed to the Assistant Attorney General, Environment and Natural Resources Division, and should refer to *United States* v. *WestRock CP, LLC,* D.J. Ref. No. 90–11–3–09733/3. All comments must be submitted no later than thirty (30) days after the publication date of this notice. Comments may be submitted either by email or by mail:

To submit comments:	*Send them to:*
By email	*pubcomment-ees.enrd@usdoj.gov.*
By mail	Assistant Attorney General, U.S. DOJ—ENRD, P.O. Box 7611, Washington, DC 20044–7611.

Under section 7003(d) of RCRA, a commenter may request an opportunity for a public meeting in the affected area.

During the public comment period, the consent decree may be examined and downloaded at this Justice Department Web site: *https://www.justice.gov/enrd/consent-decrees.* We will provide a paper copy of the consent decree upon written request and payment of reproduction costs. Please mail your request and payment to: Consent Decree Library, U.S. DOJ—ENRD, P.O. Box 7611, Washington, DC 20044–7611.

Please enclose a check or money order for $6.00 (25 cents per page reproduction cost) payable to the United States Treasury.

Henry Friedman,

Assistant Section Chief, Environmental Enforcement Section, Environment and Natural Resources Division.

[FR Doc. 2016–27229 Filed 11–10–16; 8:45 am]

BILLING CODE 4410–15–P

DEPARTMENT OF LABOR

Mine Safety and Health Administration

Petitions for Modification of Application of Existing Mandatory Safety Standards

AGENCY: Mine Safety and Health Administration, Labor.

ACTION: Notice.

SUMMARY: Section 101(c) of the Federal Mine Safety and Health Act of 1977 and Title 30 of the Code of Federal Regulations Part 44 govern the application, processing, and disposition of petitions for modification. This notice is a summary of petitions for modification submitted to the Mine Safety and Health Administration (MSHA) by the parties listed below.

DATES: All comments on the petitions must be received by MSHA's Office of Standards, Regulations, and Variances on or before December 14, 2016.

ADDRESSES: You may submit your comments, identified by ''docket number'' on the subject line, by any of the following methods:

1. *Electronic Mail: zzMSHA-comments@dol.gov*. Include the docket number of the petition in the subject line of the message.
2. *Facsimile:* 202–693–9441.
3. *Regular Mail or Hand Delivery:* MSHA, Office of Standards, Regulations, and Variances, 201 12th Street South, Suite 4E401, Arlington, Virginia 22202–5452, Attention: Sheila McConnell, Director, Office of Standards, Regulations, and Variances. Persons delivering documents are required to check in at the receptionist's desk in Suite 4E401. Individuals may inspect copies of the petitions and comments during normal business hours at the address listed above.

MSHA will consider only comments postmarked by the U.S. Postal Service or proof of delivery from another delivery service such as UPS or Federal Express on or before the deadline for comments.

FOR FURTHER INFORMATION CONTACT: Barbara Barron, Office of Standards, Regulations, and Variances at 202–693–9447 (Voice), *barron.barbara@dol.gov* (Email), or 202–693–9441 (Facsimile). [These are not toll-free numbers.]

SUPPLEMENTARY INFORMATION:

I. Background

Section 101(c) of the Federal Mine Safety and Health Act of 1977 (Mine Act) allows the mine operator or representative of miners to file a petition to modify the application of any mandatory safety standard to a coal or other mine if the Secretary of Labor determines that:

1. An alternative method of achieving the result of such standard exists which will at all times guarantee no less than the same measure of protection afforded the miners of such mine by such standard; or
2. That the application of such standard to such mine will result in a diminution of safety to the miners in such mine.

In addition, the regulations at 30 CFR 44.10 and 44.11 establish the requirements and procedures for filing petitions for modification.

II. Petitions for Modification

Docket Number: M–2016–028–C.

Petitioner: River View Coal, LLC, 835 State Route 1179, Waverly, Kentucky 42462.

Mine: River View Mine, MSHA I.D. No. 15–19374, located in Union County, Kentucky.

Regulation Affected: 30 CFR 75.500(d) (Permissible electric equipment).

Modification Request: The petitioner requests a modification of the existing standard to permit the use of nonpermissible electronic testing or diagnostic equipment inby the last open crosscut. The petitioner states that:

(1) Nonpermissible electronic testing and diagnostic equipment to be used includes: Laptop computers, oscilloscopes, vibration analysis machines, cable fault detectors, point temperature and distance probes, infrared temperature devices, insulation testers (meggers), voltage, current, resistance meters and power testers, electronic tachometers, signal analyzer devices, and ultrasonic measuring devices. Other testing and diagnostic equipment may be used if approved in advance by the MSHA District Manager.

(2) All nonpermissible testing and diagnostic equipment used in or inby the last open crosscut will be examined by a qualified person (as defined in 30 CFR 75.153) prior to use to ensure the equipment is being maintained in a safe operating condition. The examination results will be recorded weekly in the examination book and will be made available to MSHA and the miners at the mine.

(3) A qualified person as defined in existing 30 CFR 75.151 will continuously monitor for methane immediately before and during the use of nonpermissible electronic testing and diagnostic equipment in or inby the last open crosscut.

(4) Nonpermissible electronic testing and diagnostic equipment will not be used if methane is detected in concentrations at or above 1.0 percent. When 1.0 percent or more methane is detected while the nonpermissible electronic equipment is being used, the equipment will be deenergized immediately and withdrawn outby the last open crosscut.

(5) All hand-held methane detectors will be MSHA-approved and maintained in permissible and proper operating condition as defined in 30 CFR 75.320.

(6) Except for time necessary to troubleshoot under actual mining conditions, coal production in the section will cease. However, coal may remain in or on the equipment to test and diagnose the equipment under ''load.''

(7) All electronic testing and diagnostic equipment will be used in accordance with the manufacturer's recommendations.

(8) Qualified personnel who use electronic testing and diagnostic equipment will be properly trained to recognize the hazards and limitations associated with use of the equipment.

The petitioner asserts that under the terms and conditions of the petition for modification, the use of nonpermissible electronic testing and diagnostic equipment will at all times guarantee no less than the same measure of protection afforded by the existing standard.

Docket Number: M–2016–029–C.

Petitioner: River View Coal, LLC, 835 State Route 1179, Waverly, Kentucky 42462.

Mine: River View Mine, MSHA I.D. No. 15–19374, located in Union County, Kentucky.

Regulation Affected: 30 CFR 75.507–1(a) (Electric equipment other than power-connection points; outby the last open crosscut; return air; permissibility requirements).

Modification Request: The petitioner requests a modification of the existing standard to permit the use of nonpermissible electronic testing or diagnostic equipment in return air outby the last open crosscut. The petitioner states that:

(1) Nonpermissible electronic testing and diagnostic equipment to be used includes: Laptop computers, oscilloscopes, vibration analysis machines, cable fault detectors, point temperature and distance probes, infrared temperature devices, insulation testers (meggers), voltage, current, resistance meters and power testers, electronic tachometers, signal analyzer devices, and ultrasonic measuring devices. Other testing and diagnostic equipment may be used if approved in advance by the MSHA District Manager.

(2) All nonpermissible testing and diagnostic equipment used in return air outby the last open crosscut will be examined by a qualified person (as defined in 30 CFR 75.153) prior to use to ensure the equipment is being maintained in a safe operating condition. The examination results will be recorded weekly in the examination book and will be made available to MSHA and the miners at the mine.

(3) A qualified person as defined in existing 30 CFR 75.151 will continuously monitor for methane immediately before and during the use of nonpermissible electronic testing and diagnostic equipment in return air outby the last open crosscut.

(4) Nonpermissible electronic testing and diagnostic equipment will not be used if methane is detected in concentrations at or above 1.0 percent. When 1.0 percent or more methane is detected while the nonpermissible electronic equipment is being used, the equipment will be deenergized immediately and withdrawn from the return air outby the last open crosscut.

(5) All hand-held methane detectors will be MSHA-approved and maintained in permissible and proper operating condition as defined in 30 CFR 75.320.

(6) All electronic testing and diagnostic equipment will be used in accordance with the manufacturer's recommendations.

(7) Qualified personnel who use electronic testing and diagnostic equipment will be properly trained to recognize the hazards and limitations associated with use of the equipment.

The petitioner asserts that under the terms and conditions of the petition for modification, the use of nonpermissible electronic testing and diagnostic equipment will at all times guarantee no less than the same measure of protection afforded by the existing standard.

Docket Number: M–2016–030–C.

Petitioner: Pennyrile Energy, LLC, 7386 State Route 593, Calhoun, Kentucky 42327.

Mine: Riveredge Mine, MSHA I.D. No. 15–19424, located in Mclean County, Kentucky.

Regulation Affected: 30 CFR 75.313(c)(2) (Main mine fan stoppage with persons underground).

Modification Request: The petitioner requests a modification of the existing standard to prevent excessive levels of water from building up in the mine in the event of a long term electrical power outage due to uncontrollable circumstances. The petitioner states that:

(1) The mine has water that comes in continuously from the slope and would build up to dangerous levels if not maintained properly in a power outage. The only deviation to the standard would be to power the main sump pump with a generator through a long-term electrical outage. This electrical power would not need to be used when miners are underground and would be removed after restoration of power to the main fan and not switch back to regular power until an examination of the area is conducted. This could cause a diminution of safety to the miners when returning underground after a long-term power outage because of water levels reaching the mine roof causing unstable roof conditions. Water entering some of the main electrical substations and high voltage power feeds could cause an electrical explosion or possible electrocution.

(2) The pump to be used is a permissible Stancor MSHA-approved P series portable electric submersible pump (Product #P–70CE–HH). The pump is a 460VAC three-phase motor, FLC 39 amperes, 28Hp with two overload thermal switches incorporated in the stator and short circuit, locked rotor overload protection. The cable powering the pump will start in the hoist house branching from the 480VAC in the hoist house through a Fused Disconnect Switch with 60 ampere fuses. The fused Disconnect Switch will be connected to a Ground Check Enclosure mounted in the Hoist House to monitor the Grounding Conductor. Approximately 80 feet of #6 G–GC cable will be installed to power the permissible Stancor pump control box mounted at the Fan House. The pump control box will feed into the return airshaft with #6 G–GC cable for 444 feet to a permissible Disconnect Switch and from the permissible Disconnect Switch through #6 G–GC cable 40 feet to the 28Hp pump.

(3) The controller will be located on the side of the main fan house on the surface and will have a 45 ampere circuit breaker for short circuit protection and a Stancor model 821 liquid controller and motor protection unit for overload protection. The pump will be started and stopped from the Stancor model protection relay. There will be an electrical disconnect located underground at the pump location to aid in servicing the pump. The pump will be operated by the pump current control system.

(4) If mine power is down and fan off, the pump will run on a generator that is grounded with two 8-foot grounding rods attached with #4 bare copper. All persons will be kept 100 feet away from the slope entrance while the generator and pump are in operation. After power is restored, areas around the immediate bottom (sump pump and power centers) will be examined as required. The Sump Pump and power cable will be included as part of this examination. Weekly and monthly examinations will be conducted on the pump, controller, and generator as required.

The petitioner asserts that application of the existing standard will result in a diminution of safety to the miners.

Sheila McConnell,

Director, Office of Standards, Regulations, and Variances.

[FR Doc. 2016–27286 Filed 11–10–16; 8:45 am]

BILLING CODE 4520–43–P

NATIONAL ARCHIVES AND RECORDS ADMINISTRATION

[NARA–2017–006]

Records Schedules; Availability and Request for Comments

AGENCY: National Archives and Records Administration (NARA).

ACTION: Notice of availability of proposed records schedules; request for comments.

SUMMARY: The National Archives and Records Administration (NARA) publishes notice at least once monthly of certain Federal agency requests for records disposition authority (records schedules). Once approved by NARA, records schedules provide mandatory instructions on what happens to records when agencies no longer need them for current Government business. The records schedules authorize agencies to preserve records of continuing value in the National Archives of the United States and to destroy, after a specified period, records lacking administrative, legal, research, or other value. NARA publishes notice in the **Federal Register** for records schedules in which agencies propose to destroy records not previously authorized for disposal or reduce the retention period of records already authorized for disposal. NARA invites public comments on such records schedules, as required by 44 U.S.C. 3303a(a).

DATES: NARA must receive requests for copies in writing by December 14, 2016. Once NARA finishes appraising the records, we will send you a copy of the schedule you requested. We usually prepare appraisal memoranda that contain additional information concerning the records covered by a proposed schedule. You may also request these. If you do, we will also provide them once we have completed the appraisal. You have 30 days after we send to you these requested documents in which to submit comments.

ADDRESSES: You may request a copy of any records schedule identified in this notice by contacting Records Appraisal and Agency Assistance (ACRA) using one of the following means:

Mail: NARA (ACRA); 8601 Adelphi Road; College Park, MD 20740–6001.

Email: request.schedule@nara.gov.

FAX: 301–837–3698.

You must cite the control number, which appears in parentheses after the name of the agency that submitted the schedule, and a mailing address. If you would like an appraisal report, please include that in your request.

FOR FURTHER INFORMATION CONTACT: Margaret Hawkins, Director, by mail at

Records Appraisal and Agency Assistance (ACRA); National Archives and Records Administration; 8601 Adelphi Road, College Park, MD 20740–6001, by phone at 301–837–1799, or by email at *request.schedule@nara.gov.*

SUPPLEMENTARY INFORMATION: Each year, Federal agencies create billions of records on paper, film, magnetic tape, and other media. To control this accumulation, agency records managers prepare schedules proposing records retention periods and submit these schedules for NARA's approval. These schedules provide for timely transfer into the National Archives of historically valuable records and authorize the agency to dispose of all other records after the agency no longer needs them to conduct its business. Some schedules are comprehensive and cover all the records of an agency or one of its major subdivisions. Most schedules, however, cover records of only one office or program or a few series of records. Many of these update previously approved schedules, and some include records proposed as permanent.

The schedules listed in this notice are media neutral unless otherwise specified. An item in a schedule is media neutral when an agency may apply the disposition instructions to records regardless of the medium in which it creates or maintains the records. Items included in schedules submitted to NARA on or after December 17, 2007, are media neutral unless the item is expressly limited to a specific medium. (See 36 CFR 1225.12(e).)

Agencies may not destroy Federal records without Archivist of the United States' approval. The Archivist approves destruction only after thoroughly considering the records' administrative use by the agency of origin, the rights of the Government and of private people directly affected by the Government's activities, and whether or not the records have historical or other value.

In addition to identifying the Federal agencies and any subdivisions requesting disposition authority, this notice lists the organizational unit(s) accumulating the records (or notes that the schedule has agency-wide applicability when schedules cover records that may be accumulated throughout an agency); provides the control number assigned to each schedule, the total number of schedule items, and the number of temporary items (the records proposed for destruction); and includes a brief description of the temporary records. The records schedule itself contains a full description of the records at the file unit level as well as their disposition. If NARA staff has prepared an appraisal memorandum for the schedule, it also includes information about the records. You may request additional information about the disposition process at the addresses above.

Schedules Pending

1. Department of Defense, Defense Threat Reduction Agency (DAA–0374–2014–0022, 1 item, 1 temporary item). Records relating to plans and studies regarding responses to weapons accidents.
2. Department of Defense, Office of the Secretary of Defense (DAA–0330–2015–0011, 1 item, 1 temporary item). Master files of an electronic information system used to identify gaps in workforce competency.
3. Department of Defense, Office of the Secretary of Defense (DAA–0330–2016–0017, 1 item, 1 temporary item). Records relating to the issuance of firearms identification cards to retired law enforcement officers.
4. Department of Homeland Security, Immigration and Customs Enforcement (DAA–0567–2015–0016, 5 items, 5 temporary items). Records related to fugitive operations, including operational worksheets, reports, and briefing information.
5. Department of Justice, Executive Office for Immigration Review (DAA–0582–2016–0001, 3 items, 3 temporary items). Records related to pro bono legal representation including provider lists and provider list applicant files.
6. Department of the Navy, Agency-wide (DAA–NU–2015–0010, 11 items, 10 temporary items). Materials management records including routine correspondence, receipts for clothing, and records relating to provisions and rations, electronics repair, daily operations, and related matters. Proposed for permanent retention are records relating to flags and pennants.
7. Department of Transportation, Federal Motor Carrier Safety Administration (DAA–0557–2015–0002, 1 item, 1 temporary item). Master files of an electronic information system relating to audits and field inspections.
8. Department of Transportation, Federal Motor Carrier Safety Administration (DAA–0557–2015–0009, 1 item, 1 temporary item). Master files of an electronic information system relating to vehicle crash data and safety inspections.
9. Department of Transportation, Federal Motor Carrier Safety Administration (DAA–0557–2016–0001, 2 items, 2 temporary items). Master files of an electronic information system relating to employment drug screenings.
10. Department of Transportation, Pipeline and Hazardous Materials Safety Administration (DAA–0571–2014–0004, 3 items, 1 temporary item). Public affairs administrative records. Proposed for permanent retention are Congressional records and press releases.
11. Department of Veterans Affairs, Veterans Health Administration (DAA–0015–2016–0006, 8 items, 8 temporary items). Records are databases tracking patient eligibility for surgical procedures, and analysis of procedural outcomes.
12. National Aeronautics and Space Administration, Agency-wide (DAA–0255–2016–0003, 1 item, 1 temporary item). Safety and Mission Assurance records to include routine audit support documents of NASA installations.
13. National Aeronautics and Space Administration, Agency-wide (DAA–0255–2016–0004, 2 items, 2 temporary items). Employee awards case files and awards tracking database.
14. National Aeronautics and Space Administration, Agency-wide (DAA–0255–2016–0005, 2 items, 2 temporary items). Electronic software usage agreements and duplicate paper copies.
15. National Archives and Records Administration, Office of the Chief Records Officer (DAA–0064–2016–0010, 2 items, 2 temporary items). Records management training records, including course outlines, handouts, reference files, student transcripts, certificates, and test data.
16. National Archives and Records Administration, Office of Human Capital (DAA–0064–2016–0014, 3 items, 3 temporary items). Internal agency training records, including course plans, instructional and presentation materials, manuals, syllabi, textbooks, source material, and videos.
17. National Archives and Records Administration, Office of Inspector General (DAA–0064–2016–0011, 2 items, 2 temporary items). Audit

reports and audit resolution case files.

Laurence Brewer,

Chief Records Officer for the U.S. Government.

[FR Doc. 2016–27273 Filed 11–10–16; 8:45 am]

BILLING CODE 7515–01–P

NATIONAL ARCHIVES AND RECORDS ADMINISTRATION

[NARA–2017–007]

Advisory Committee on the Records of Congress; Meeting

AGENCY: National Archives and Records Administration (NARA).

ACTION: Notice of advisory committee meeting.

SUMMARY: In accordance with the Federal Advisory Committee Act, the National Archives and Records Administration (NARA) announces a meeting of the Advisory Committee on the Records of Congress. The committee advises NARA on the full range of programs, policies, and plans for the Center for Legislative Archives in the Office of Legislative Archives, Presidential Libraries, and Museum Services (LPM).

DATES: The meeting will be on Monday, December 5, 2016 from 10:00 a.m. to 11:30 a.m.

ADDRESSES: The United States Capitol, 1st Street, Washington, DC 20515, Room S–211 (The LBJ Room).

FOR FURTHER INFORMATION CONTACT: Center for Legislative Archives at 202.357.5350, or Sharon Fitzpatrick at *sharon.fitzpatrick@nara.gov.*

SUPPLEMENTARY INFORMATION:

Agenda

(1) Chair's Opening Remarks—Secretary of the U.S. Senate
(2) Recognition of co-chair—Clerk of the U.S. House of Representatives
(3) Recognition of the Archivist of the United States
(4) Approval of the minutes of the last meeting
(5) Senate Archivist's report
(6) House Archivist's report
(7) Center update
(8) Other current issues and new business

The meeting is open to the public.

Patrice Murray,

Committee Management Officer.

[FR Doc. 2016–27276 Filed 11–10–16; 8:45 am]

BILLING CODE 7515–01–P

NATIONAL COUNCIL ON DISABILITY

Sunshine Act Meetings

TIME AND DATES: The Members of the National Council on Disability (NCD) will hold a quarterly meeting on Friday, December 2, 2016 via teleconference from 12:00 p.m.–2:15 p.m., Eastern.

PLACE: The meeting will occur by phone. NCD staff will participate in the call from the NCD office at 1331 F Street NW., Suite 850, Washington, DC 20004. Interested parties may join the meeting in person at the NCD office or may join the phone line in a listening-only capacity (other than the period allotted for public comment noted below) using the following call-in information:

Teleconference number: 888–221–9508; Conference ID: 3506445; Conference Title: NCD Meeting; Host Name: Clyde Terry.

MATTERS TO BE CONSIDERED: The Council will receive an update on the Council's ongoing policy projects; the agency's finances; legislative activity; and the agency's annual progress report. The Council will also vote on a change to its bylaws. The Council will receive public comment on poverty and disability.

AGENDA: The times provided below are approximations for when each agenda item is anticipated to be discussed (all times Eastern):

Friday, December 2

12:00–12:05 p.m.—Welcome and Call to Order
12:05–12:10 p.m.—Attendance and Roll Call
12:10–12:15 p.m.—Approval of July Minutes
12:15–12:25 p.m.—Chairperson's Report
12:25–12:35 p.m.—Executive Director's Report
12:35–12:45 p.m.—Policy Update
12:45–1:05 p.m.—Finance Update
1:05–1:15 p.m.—Legislative Update
1:15–1:20 p.m.—Vote on Bylaw Change
1:20–1:35 p.m.—Progress Report Update
1:35–2:05 p.m.—Public Comment
2:05–2:15 p.m.—Council Discussion
2:15 p.m.—Adjournment

PUBLIC COMMENT: To better facilitate NCD's public comment, any individual interested in providing public comment is asked to register his or her intent to provide comment in advance by sending an email to *PublicComment@ncd.gov* with the subject line ''Public Comment'' with your name, organization, state, and topic of comment included in the body of your email. Full-length written public comments may also be sent to that email address. All emails to register for public comment at the quarterly meeting must be received by Wednesday, November 30, 2016. Priority will be given to those individuals who are in-person to provide their comments during the town hall portions of the agenda. Those commenters on the phone will be called on according to the list of those registered via email. Due to time constraints, NCD asks all commenters to limit their comments to three minutes. Comments received at the quarterly meeting will be limited to the topic of disability and poverty.

CONTACT PERSON: Anne Sommers, NCD, 1331 F Street NW., Suite 850, Washington, DC 20004; 202–272–2004 (V), 202–272–2074 (TTY).

ACCOMMODATIONS: A CART streamtext link has been arranged for this teleconference meeting. The Web link to access CART on Friday, December 2, 2016 is: *https://www.streamtext.net/player?event=NCD.*

Those who plan to attend the meeting in-person and require accommodations should notify NCD as soon as possible to allow time to make arrangements. To help reduce exposure to fragrances for those with multiple chemical sensitivities, NCD requests that all those attending the meeting in person refrain from wearing scented personal care products such as perfumes, hairsprays, and deodorants.

Dated: November 9, 2016.

Rebecca Cokley,

Executive Director.

[FR Doc. 2016–27447 Filed 11–9–16; 4:15 pm]

BILLING CODE 8421–03–P

NATIONAL SCIENCE FOUNDATION

Sunshine Act Meetings; National Science Board

The National Science Board, pursuant to NSF regulations (45 CFR part 614), the National Science Foundation Act, as amended, (42 U.S.C. 1862n–5), and the Government in the Sunshine Act (5 U.S.C. 552b), hereby gives notice of a revised schedule of meetings for the transaction of National Science Board business. This notice amends the notice that was published on November 7, 2016, at 81 FR 78212.

CHANGE TO START TIME OF COMMITTEE MEETING: Joint Session of CSB Subcommittee on Facilities (SCF) and CPP Open session: 4:00–4:50 p.m.

- Committee Chairs' Opening Remarks
- Approval of Prior Minutes
- Discussion of Facilities-related Information Products
- Discussion of the Annual Facility Plan

The meeting had previously been scheduled to start at 4:20 p.m. EST.

UPDATES: Please refer to the National Science Board Web site for additional information. Meeting information and schedule updates (time, place, subject matter, and status of meeting) may be found at *http://www.nsf.gov/nsb/meetings/notices.jsp.*

AGENCY CONTACT: John Veysey, *jveysey@nsf.gov,* 703–292–7000.

PUBLIC AFFAIRS CONTACT: Nadine Lymn, *nlymn@nsf.gov,* 703–292–2490.

Chris Blair,

Executive Assistant, National Science Board Office.

[FR Doc. 2016–27360 Filed 11–9–16; 11:15 am]

BILLING CODE 7555–01–P

NUCLEAR REGULATORY COMMISSION

[Docket Nos. 50–335 and 50–389; NRC–2011–0302]

Florida Power and Light Company; St. Lucie Plant, Unit Nos. 1 and 2

AGENCY: Nuclear Regulatory Commission.

ACTION: Environmental assessment and finding of no significant impact; issuance.

SUMMARY: The U.S. Nuclear Regulatory Commission (NRC) is considering issuance of amendments to Renewed Facility Operating License Nos. DPR–67 and NPF–16, issued on October 2, 2003, and held by Florida Power and Light Company (FPL or the licensee) for the operation of St. Lucie Plant, Unit Nos. 1 and 2 (St. Lucie), located on Hutchinson Island in St. Lucie County, Florida. The proposed amendments would revise the Environmental Protection Plans (Non-Radiological) (EPPs), contained in Appendix B to the St. Lucie renewed facility operating licenses. The NRC is issuing a final environmental assessment (EA) and finding of no significant impact (FONSI) associated with the proposed license amendments.

DATES: The EA and FONSI referenced in this document is available on November 14, 2016.

ADDRESSES: Please refer to Docket ID NRC–2011–0302 when contacting the NRC about the availability of information regarding this document. You may obtain publicly-available information related to this document using any of the following methods:

- *Federal Rulemaking Web site:* Go to *http://www.regulations.gov* and search for Docket ID NRC–2011–0302. Address questions about NRC dockets to Carol Gallagher; telephone: 301–415–3463; email: *Carol.Gallagher@nrc.gov.* For technical questions, contact the individual listed in the **FOR FURTHER INFORMATION CONTACT** section of this document.
- *NRC's Agencywide Documents Access and Management System (ADAMS):* You may obtain publicly-available documents online in the NRC Public Documents collection at *http://www.nrc.gov/reading-rm/adams.html.* To begin the search, select ''*ADAMS Public Documents*'' and then select ''*Begin Web-based ADAMS Search.*'' For problems with ADAMS, please contact the NRC's Public Document Room (PDR) reference staff at 1–800–397–4209, 301–415–4737, or by email to *pdr.resource@nrc.gov.* The ADAMS accession number for each document referenced in this notice (if that document is available in ADAMS) is provided the first time that a document is referenced. For the convenience of the reader, the ADAMS accession numbers are also provided in a table in the ''Availability of Documents'' section of this document.
- *NRC's PDR:* You may examine and purchase copies of public documents at the NRC's PDR, Room O1–F21, One White Flint North, 11555 Rockville Pike, Rockville, Maryland 20852.

FOR FURTHER INFORMATION CONTACT: Perry Buckberg, Office of Nuclear Reactor Regulation, U.S. Nuclear Regulatory Commission, Washington, DC 20555–0001; telephone: 301–415–1383; email: *Perry.Buckberg@nrc.gov.*

SUPPLEMENTARY INFORMATION:

I. Introduction

The NRC is considering issuance of amendments to Renewed Facility Operating License Nos. DPR–67 and NPF–16 issued to FPL for operation of St. Lucie, located on Hutchinson Island in St. Lucie County, Florida. The licensee submitted its license amendment request by letter dated April 29, 2016 (ADAMS Accession No. ML16125A253), as amended by letter dated August 11, 2016 (ADAMS Accession No. ML16238A190). If approved, the license amendments would revise language in Section 4.2, ''Terrestrial/Aquatic Issues,'' of the St. Lucie EPPs to require FPL to adhere to the specific requirements within the Incidental Take Statement (ITS) of the ''currently applicable'' biological opinion. The NRC prepared an EA to document its findings related to the proposed license amendments in accordance with § 51.21 of title 10 of the *Code of Federal Regulations* (10 CFR). Based on the results of the EA documented herein, the NRC did not identify any significant environmental impacts associated with the proposed amendments and is, therefore, issuing a FONSI in accordance with 10 CFR 51.32.

II. Environmental Assessment

Plant Site and Environs

St. Lucie is a two-unit plant with pressurized water reactors and a once-through cooling system that withdraws water from and discharges heated water to the Atlantic Ocean. St. Lucie lies on Hutchinson Island in an unincorporated portion of St. Lucie County, Florida approximately 7 miles (11 kilometers) southeast of Fort Pierce, 4.5 miles (7 kilometers) east of Port St. Lucie, and 8 miles (13 kilometers) north of Stuart. The facility occupies approximately 1,130 acres (457 hectares) on the widest portion of the island. The Atlantic Ocean borders the site to the east, and the Indian River Lagoon, a tidally influenced estuary, lies to the west.

The U.S. Atomic Energy Commission, the NRC's predecessor agency, and the NRC have previously conducted environmental reviews of St. Lucie operations in several documents, which contain more detailed descriptions of the plant site and environs. Those documents include several Final Environmental Statements related to construction and initial operation of St. Lucie; the NRC's May 2003 Generic Environmental Impact Statement for License Renewal of Nuclear Plants: Regarding St. Lucie Units 1 and 2—Final Report (NUREG–1437, Supplement 11) (ADAMS Accession No. ML031360709); and the NRC's June 2012 EA for the St. Lucie Extended Power Uprate (ADAMS Accession No. ML12165A511).

Description of the Proposed Action

The proposed action would revise language in Section 4.2, ''Terrestrial/Aquatic Issues,'' of the St. Lucie EPPs to require FPL to adhere to the specific requirements within the ITS of the ''currently applicable'' biological opinion. The proposed amendments would remove language specifically referencing the National Marine Fisheries Service's (NMFS) previous biological opinion, which was issued in 2001. The proposed action would be in accordance with the licensee's application dated April 29, 2016 (ADAMS Accession No. ML16125A253), as amended by letter dated August 11, 2016 (ADAMS Accession No. ML16238A190).

By amending Section 4.2 of the EPPs to clarify that FPL must adhere to the ITS of the ''currently applicable'' biological opinion, the proposed action

would require FPL's compliance with the NMFS' March 24, 2016, biological opinion (ADAMS Accession No. ML16084A616). This biological opinion applies to smalltooth sawfish (*Pristis pectinata*) and five species of sea turtles (*Caretta carreta, Chelonia mydas, Lepidochelys kempii, Eretmochelys imbricata,* and *Dermochelys coriacea*), and concludes that the continued operation of St. Lucie is not likely to jeopardize the continued existence of these species or destroy or adversely modify the designated critical habitat of the loggerhead Northwest Atlantic distinct population segment. The ITS exempts the incidental take of these species from the prohibitions of Section 9 of the Endangered Species Act of 1973, as amended, provided that the specified Reasonable and Prudent Measures (RPMs) are implemented. The RPMs are:

(1) Avoid and minimize entrainment into the St. Lucie intake canal.

(2) Avoid and minimize injurious or lethal take from entrainment into, entrapment in, capture in, and release from the St. Lucie intake canal or from impingement at intake wells.

In order to implement the RPMs, the biological opinion prescribes a number of Terms and Conditions (T&Cs). The T&Cs require FPL to design, test, construct, and implement excluder devices for the St. Lucie intake pipe velocity caps that will minimize the number of nesting or egg-bearing female sea turtles that enter the intake pipes. Following testing, in-water construction of the excluder devices must begin no later than the first half of 2018. The licensee must also develop monitoring and maintenance plans to inspect routinely and remove debris and biofouling organisms from the excluder devices and the intake pipes and to inspect, repair, and replace, as necessary, the 8-inch mesh barrier net in the intake canal.

The T&Cs specify how FPL personnel should capture and relocate smalltooth sawfish and sea turtles that enter the intake canal. Additionally, the T&Cs specify various monitoring and reporting requirements, including how FPL should record the number and condition of turtles captured in the intake canal; the periodicity at which FPL personnel should inspect the banks of the intake canal for turtle tracks or signs of nesting; how FPL personnel should monitor the release site for possible delayed lethal impacts to captured smalltooth sawfish; how FPL must notify NMFS of lethal smalltooth sawfish or sea turtle takes; and the information that FPL should include in monthly and annual reports. The T&Cs also require FPL to continue to participate in the Florida Sea Turtle Stranding and Salvage Network; to continue to conduct the ongoing sea turtle nesting program and public service turtle walks; and to consult with the Florida Fish and Wildlife Conservation Commission (FWC) in accordance with FPL's FWC Marine Turtle Permit. Finally, the T&Cs require FPL contracted biologists to receive training on smalltooth sawfish and sea turtle handling.

Notably, because the proposed amendments would require FPL's compliance with the ''currently applicable'' biological opinion, if NMFS were to issue a new biological opinion in the future, the proposed amendments would require FPL to adhere to the specific requirements in the ITS of that new biological opinion, and FPL would no longer be required to adhere to the March 24, 2016, biological opinion upon issuance of a new biological opinion.

Need for the Proposed Action

The proposed action is needed to reflect the new biological opinion issued by NMFS on March 24, 2016, and to require FPL's compliance with the ITS and related RPMs and T&Cs contained therein. The proposed action is administrative in nature.

Environmental Impacts of the Proposed Action

The NRC has completed its evaluation of the proposed action and concludes that the proposed changes are administrative in nature, would have no direct effects on plant equipment or plant operation, and would not involve any changes to the design bases for St. Lucie.

With regard to potential radiological impacts, the proposed action would not increase the probability or consequences of accidents, would not change the types or increase the amount of effluent that may be released offsite, and would result in no increase in occupational or public radiation exposure. Therefore, there are no significant radiological environmental impacts associated with the proposed action.

With regard to potential non-radiological impacts, because the proposed action is administrative in nature, it would not have any direct impacts on land, air, or water resources, including impacts to biota. In addition, the NRC staff identified no socioeconomic or environmental justice impacts associated with the proposed action. Therefore, there are no significant non-radiological environmental impacts associated with the proposed action.

An indirect effect of the proposed action is that FPL will design, test, construct, and implement excluder devices for the St. Lucie intake pipe velocity caps to minimize the number of nesting or egg-bearing female sea turtles that enter the intake pipes in accordance with the March 24, 2016, biological opinion. The biological opinion stipulates that in-water construction of the excluder devices must begin no later than the first half of 2018. The excluder devices will be prefabricated offsite and will only require limited construction equipment for the cleaning and attachment of the excluder devices to the velocity caps. The excluder devices will be installed within the boundaries of the existing concrete velocity cap structures located approximately 1,500 feet (460 meters) offshore. The velocity caps and associated functions are not safety related and would, therefore, not require any physical changes to systems, structures, or components intended for the prevention of accidents. The licensee may need to perform some localized cleaning of marine growth on the concrete surfaces of the velocity caps prior to attaching the excluder devices to the velocity caps. During such cleaning, there is potential for minor water turbidity, which FPL would monitor in accordance with the biological opinion, FWC Marine Turtle Permit, Army Corps of Engineers National Wide Permit, and Florida Department of Environmental Protection Environmental Source Permit, as applicable. Installation would not require dredging, sediment disturbance, or construction on the ocean floor, and would also not result in any land disturbances. The NRC staff concludes that the indirect effects of installation of the turtle excluder devices will not result in significant environmental impacts to the radiological or non-radiological environment.

Based on the foregoing analysis, the NRC concludes that there are no significant environmental impacts associated with the proposed action.

Environmental Impacts of the Alternatives to the Proposed Action

As an alternative to the proposed action, the NRC staff considered denial of the proposed license amendments (*i.e.,* the ''no-action'' alternative). Denial of the application would result in no change in current environmental conditions or impacts. Accordingly, the environmental impacts of the proposed action and the no-action alternative are similar.

Alternative Use of Resources

The proposed action does not involve the use of any different resources than those previously considered in NUREG–1437, Supplement 11, prepared for the license renewal of St. Lucie.

Agencies and Persons Consulted

The NRC did not enter into consultation with any other Federal Agency or with the State of Florida regarding the environmental impact of the proposed action. However, on August 29, 2016, the NRC notified the Florida state official, Cynthia Becker, Bureau of Radiation Control, of the proposed amendments. The state official had no comments.

III. Finding of No Significant Impact

The NRC is considering issuing amendments for Renewed Facility Operating License Nos. DPR–67 and NPF–16 issued to FPL for operation of St. Lucie. The proposed amendments would revise the St. Lucie EPPs to require FPL to adhere to the specific requirements within the ITS of the ''currently applicable'' biological opinion. On the basis of the EA included in Section II of this document and incorporated by reference into this finding, the NRC concludes that the proposed action would not have significant effects on the quality of the human environment. The NRC's evaluation considered information provided in the licensee's application, as supplemented, as well as the NRC's independent review of other relevant environmental documents. Section IV of this document lists the environmental documents related to the proposed action and includes information on the availability of these documents. Based on its findings, the NRC has determined not to prepare an environmental impact statement for the proposed action.

IV. Availability of Documents

The documents identified in the following table are available to interested persons through ADAMS.

Document	ADAMS Accession No.
Florida Power and Light Company, License Amendment Request to Update Appendix B to the Renewed Facility Operating Licenses to Incorporate the 2016 Biological Opinion, Dated April 29, 2016	ML16125A253
Florida Power and Light Company, Response to Request for Additional Information Regarding License Amendment Request for Biological Opinion License Changes, Dated August 11, 2016	ML16238A190
National Marine Fisheries Service, Biological Opinion for Continued Operation of St. Lucie Nuclear Power Plant, Units 1 and 2 in St. Lucie County, Florida, Dated March 24, 2016	ML16084A616
U.S. Nuclear Regulatory Commission, Generic Environmental Impact Statement for License Renewal of Nuclear Plants: Regarding St. Lucie Units 1 and 2—Final Report (NUREG–1437, Supplement 11), Dated May 2003	ML031360709
U.S. Nuclear Regulatory Commission, St. Lucie Plant, Units 1 and 2—Environmental Assessment and Finding of No Significant Impact Related to the Proposed Extended Power Uprate, Dated June 25, 2012	ML12165A511

Dated at Rockville, Maryland, this 3rd day of November 2016.

For The Nuclear Regulatory Commission.

Perry H. Buckberg,

Senior Project Manager, Plant Licensing Branch II–2, Division of Operating Reactor Licensing, Office of Nuclear Reactor Regulation.

[FR Doc. 2016–27354 Filed 11–10–16; 8:45 am]

BILLING CODE 7590–01–P

NUCLEAR REGULATORY COMMISSION

[NRC–2016–0001]

Sunshine Act Meeting Notice

DATE: November 14, 21, 28, December 5, 12, 19, 2016.

PLACE: Commissioners' Conference Room, 11555 Rockville Pike, Rockville, Maryland.

STATUS: Public and Closed.

Week of November 14, 2016

There are no meetings scheduled for the week of November 14, 2016.

Week of November 21, 2016—Tentative

There are no meetings scheduled for the week of November 21, 2016.

Week of November 28, 2016—Tentative

Tuesday, November 29, 2016

9:00 a.m. Briefing on Uranium Recovery (Public Meeting); (Contact: Samantha Crane: 301–415–6380).

This meeting will be webcast live at the Web address—*http://www.nrc.gov/.*

Week of December 5, 2016—Tentative

There are no meetings scheduled for the week of December 5, 2016.

Week of December 12, 2016—Tentative

Thursday, December 15, 2016

9:30 a.m. Briefing on Equal Employment Opportunity, Affirmative Employment, and Small Business (Public Meeting); (Contact: Larniece McKoy Moore: 301–415–1942).

This meeting will be webcast live at the Web address—*http://www.nrc.gov/.*

Week of December 19, 2016—Tentative

There are no meetings scheduled for the week of December 19, 2016.

* * * * *

The schedule for Commission meetings is subject to change on short notice. For more information or to verify the status of meetings, contact Denise McGovern at 301–415–0981 or via email at *Denise.McGovern@nrc.gov.*

* * * * *

The NRC Commission Meeting Schedule can be found on the Internet at: *http://www.nrc.gov/public-involve/public-meetings/schedule.html.*

* * * * *

The NRC provides reasonable accommodation to individuals with disabilities where appropriate. If you need a reasonable accommodation to participate in these public meetings, or need this meeting notice or the transcript or other information from the public meetings in another format (*e.g.*, braille, large print), please notify Kimberly Meyer, NRC Disability Program Manager, at 301–287–0739, by videophone at 240–428–3217, or by email at *Kimberly.Meyer-Chambers@nrc.gov.* Determinations on requests for reasonable accommodation will be made on a case-by-case basis.

* * * * *

Members of the public may request to receive this information electronically. If you would like to be added to the distribution, please contact the Nuclear Regulatory Commission, Office of the Secretary, Washington, DC 20555 (301–415–1969), or email *Brenda.Akstulewicz@nrc.gov* or *Patricia.Jimenez@nrc.gov.*

Dated: November 9, 2016.

Denise McGovern,

Policy Coordinator, Office of the Secretary.

[FR Doc. 2016–27458 Filed 11–9–16; 4:15 pm]

BILLING CODE 7590–01–P

NUCLEAR REGULATORY COMMISSION

[NRC–2016–0077]

Information Collection: Policy Statement for the ''Criteria for Guidance of States and NRC in Discontinuance of NRC Regulatory Authority and Assumption Thereof by States Through Agreement,'' Maintenance of Existing Agreement State Programs, Request for Information Through the Integrated Materials Performance Evaluation Program (IMPEP) Questionnaire, and Agreement State Participation in IMPEP

AGENCY: Nuclear Regulatory Commission.

ACTION: Notice of submission to the Office of Management and Budget; request for comment.

SUMMARY: The U.S. Nuclear Regulatory Commission (NRC) has recently submitted a request for renewal of an existing collection of information to the Office of Management and Budget (OMB) for review. The information collection is entitled, ''Policy Statement for the 'Criteria for Guidance of States and NRC in Discontinuance of NRC Regulatory Authority and Assumption Thereof By States Through Agreement,' Maintenance of Existing Agreement State Programs, Request for Information Through the Integrated Materials Performance Evaluation Program (IMPEP) Questionnaire, and Agreement State Participation in IMPEP.''

DATES: Submit comments by December 14, 2016.

ADDRESSES: Submit comments directly to the OMB reviewer at: Vlad Dorjets, Desk Officer, Office of Information and Regulatory Affairs (3150–0183), NEOB–10202, Office of Management and Budget, Washington, DC 20503; telephone: 202–395–7315, email: *oira_submission@omb.eop.gov.*

FOR FURTHER INFORMATION CONTACT: David Cullison, NRC Clearance Officer, U.S. Nuclear Regulatory Commission, Washington, DC 20555–0001; telephone: 301–415–2084; email: *INFOCOLLECTS.Resource@nrc.gov.*

SUPPLEMENTARY INFORMATION:

I. Obtaining Information and Submitting Comments

A. Obtaining Information

Please refer to Docket ID NRC–2016–0077 when contacting the NRC about the availability of information for this action. You may obtain publicly-available information related to this action by any of the following methods:

- *Federal Rulemaking Web site:* Go to *http://www.regulations.gov* and search for Docket ID NRC–2016–0077. A copy of the collection of information and related instructions may be obtained without charge by accessing Docket ID NRC–2016–0077 on this Web site.
- *NRC's Agencywide Documents Access and Management System (ADAMS):* You may obtain publicly-available documents online in the ADAMS Public Documents collection at *http://www.nrc.gov/reading-rm/adams.html.* To begin the search, select ''*ADAMS Public Documents*'' and then select ''*Begin Web-based ADAMS Search.*'' For problems with ADAMS, please contact the NRC's Public Document Room (PDR) reference staff at 1–800–397–4209, 301–415–4737, or by email to *pdr.resource@nrc.gov.* A copy of the collection of information and related instructions may be obtained without charge by accessing ADAMS Accession No. ML16099A056. The supporting statement is available in ADAMS under Accession No. ML16266A477.
- *NRC's PDR:* You may examine and purchase copies of public documents at the NRC's PDR, Room O1–F21, One White Flint North, 11555 Rockville Pike, Rockville, Maryland 20852.
- *NRC's Clearance Officer:* A copy of the collection of information and related instructions may be obtained without charge by contacting the NRC's Clearance Officer, David Cullison, Office of the Chief Information Officer, U.S. Nuclear Regulatory Commission, Washington, DC 20555–0001; telephone: 301–415–2084; email: *INFOCOLLECTS.Resource@nrc.gov.*

B. Submitting Comments

The NRC cautions you not to include identifying or contact information in comment submissions that you do not want to be publicly disclosed in your comment submission. All comment submissions are posted at *http://www.regulations.gov* and entered into ADAMS. Comment submissions are not routinely edited to remove identifying or contact information.

If you are requesting or aggregating comments from other persons for submission to the OMB, then you should inform those persons not to include identifying or contact information that they do not want to be publicly disclosed in their comment submission. Your request should state that comment submissions are not routinely edited to remove such information before making the comment submissions available to the public or entering the comment into ADAMS.

II. Background

Under the provisions of the Paperwork Reduction Act of 1995 (44 U.S.C. Chapter 35), the NRC recently submitted a request for renewal of an existing collection of information to OMB for review entitled, ''Policy Statement for the 'Criteria for Guidance of States and NRC in Discontinuance of NRC Regulatory Authority and Assumption Thereof By States Through Agreement,' Maintenance of Existing Agreement State Programs, Request for Information Through the Integrated Materials Performance Evaluation Program (IMPEP) Questionnaire, and Agreement State Participation in IMPEP.'' The NRC hereby informs potential respondents that an agency may not conduct or sponsor, and that a person is not required to respond to, a collection of information unless it displays a currently valid OMB control number.

The NRC published a **Federal Register** notice with a 60-day comment period on this information collection on July 13, 2016 (81 FR 45309).

1. *The title of the information collection:* ''Policy Statement for the 'Criteria for Guidance of States and NRC in Discontinuance of NRC Regulatory Authority and Assumption Thereof By States Through Agreement,' Maintenance of Existing Agreement State Programs, Request for Information Through the Integrated Materials Performance Evaluation Program (IMPEP) Questionnaire, and Agreement State Participation in IMPEP.''
2. *OMB approval number:* 3150–0183.
3. *Type of submission:* Extension.
4. *The form number if applicable:* Not applicable.
5. *How often the collection is required or requested:* Every four years for completion of the IMPEP questionnaire in preparation for an IMPEP review. One time for new Agreement State applications. For participation by Agreement States' staff in all IMPEP reviews and fulfilling requirements for Agreement States to maintain their programs.
6. *Who will be required or asked to respond:* All Agreement States (37 Agreement States who have signed Agreements with NRC under Section 274b. of the Atomic Energy Act (Act))

and any non-Agreement State seeking to sign an Agreement with the Commission. On average, the staff of 11 Agreement States per year will be requested to provide completed questionnaires for regularly and non-regularly scheduled IMPEP reviews.

7. *The estimated number of annual responses:* 59

8. *The estimated number of annual respondents:* 39 (37 existing Agreement States plus 2 applicants).

9. *An estimate of the total number of hours needed annually to comply with the information collection requirement or request:* 287,893 hours (an average of 7,382 hours per respondent). This includes 477 hours to complete the IMPEP questionnaires; 5,500 hours to prepare two new Agreement State applications, 396 hours for Agreement State staff participation in IMPEP reviews; and 281,520 hours for maintaining Existing Agreement State programs.

10. *Abstract:* The States wishing to become Agreement States are requested to provide certain information to the NRC as specified by the Commission's Policy Statement, ''Criteria for Guidance of States and NRC in Discontinuance of NRC Regulatory Authority and Assumption Thereof By States Through Agreement.'' The Agreement States need to ensure that the radiation control program under the Agreement remains adequate and compatible with the requirements of Section 274 of the Act and must maintain certain information.

The NRC conducts periodic evaluations through IMPEP to ensure that these programs are compatible with the NRC's program, meet the applicable parts of the Act, and are adequate to protect public health and safety.

Dated at Rockville, Maryland, this 4th day of November 2016.

For the Nuclear Regulatory Commission.

David Cullison,

NRC Clearance Officer, Office of the Chief Information Officer.

[FR Doc. 2016–27224 Filed 11–10–16; 8:45 am]

BILLING CODE 7590–01–P

NUCLEAR REGULATORY COMMISSION

[NRC–2016–0140]

Information Collection: Generic Clearance for the Collection of Qualitative Feedback on Agency Service Delivery

AGENCY: Nuclear Regulatory Commission.

ACTION: Notice of submission to the Office of Management and Budget; request for comment.

SUMMARY: The U.S. Nuclear Regulatory Commission (NRC) has recently submitted a request for renewal of an existing collection of information to the Office of Management and Budget (OMB) for review. The information collection is entitled, ''Generic Clearance for the Collection of Qualitative Feedback on Agency Service Delivery.''

DATES: Submit comments by December 14, 2016.

ADDRESSES: Submit comments directly to the OMB reviewer at: Vlad Dorjets, Desk Officer, Office of Information and Regulatory Affairs (3150–0217), NEOB–10202, Office of Management and Budget, Washington, DC 20503; telephone: 202–395–7315, email: *oira_submission@omb.eop.gov.*

FOR FURTHER INFORMATION CONTACT: David Cullison, NRC Clearance Officer, U.S. Nuclear Regulatory Commission, Washington, DC 20555–0001; telephone: 301–415–2084; email: *INFOCOLLECTS.Resource@nrc.gov.*

SUPPLEMENTARY INFORMATION:

I. Obtaining Information and Submitting Comments

A. Obtaining Information

Please refer to Docket ID NRC–2016–0140 when contacting the NRC about the availability of information for this action. You may obtain publicly-available information related to this action by any of the following methods:

- *Federal Rulemaking Web site:* Go to *http://www.regulations.gov* and search for Docket ID NRC–2016–0140.
- *NRC's Agencywide Documents Access and Management System (ADAMS):* You may obtain publicly-available documents online in the ADAMS Public Documents collection at *http://www.nrc.gov/reading-rm/adams.html.* To begin the search, select ''*ADAMS Public Documents*'' and then select ''*Begin Web-based ADAMS Search.*'' For problems with ADAMS, please contact the NRC's Public Document Room (PDR) reference staff at 1–800–397–4209, 301–415–4737, or by email to *pdr.resource@nrc.gov.* The supporting statement is available in ADAMS under Accession No. ML16285A384.
- *NRC's PDR:* You may examine and purchase copies of public documents at the NRC's PDR, Room O1–F21, One White Flint North, 11555 Rockville Pike, Rockville, Maryland 20852.
- *NRC's Clearance Officer:* A copy of the collection of information and related instructions may be obtained without charge by contacting the NRC's Clearance Officer, David Cullison, Office of the Chief Information Officer, U.S. Nuclear Regulatory Commission, Washington, DC 20555–0001; telephone: 301–415–2084; email: *INFOCOLLECTS.Resource@nrc.gov.*

B. Submitting Comments

The NRC cautions you not to include identifying or contact information in comment submissions that you do not want to be publicly disclosed in your comment submission. All comment submissions are posted at *http://www.regulations.gov* and entered into ADAMS. Comment submissions are not routinely edited to remove identifying or contact information.

If you are requesting or aggregating comments from other persons for submission to the OMB, then you should inform those persons not to include identifying or contact information that they do not want to be publicly disclosed in their comment submission. Your request should state that comment submissions are not routinely edited to remove such information before making the comment submissions available to the public or entering the comment into ADAMS.

II. Background

Under the provisions of the Paperwork Reduction Act of 1995 (44 U.S.C. Chapter 35), the NRC recently submitted a request for renewal of an existing collection of information to OMB for review entitled, ''Generic Clearance for the Collection of Qualitative Feedback on Agency Service Delivery.'' The NRC hereby informs potential respondents that an agency may not conduct or sponsor, and that a person is not required to respond to, a collection of information unless it displays a currently valid OMB control number.

The NRC published a **Federal Register** notice with a 60-day comment period on this information collection on July 22, 2016 (81 FR 47839).

1. *The title of the information collection:* Generic Clearance for the Collection of Qualitative Feedback on Agency Service Delivery.

2. *OMB approval number:* 3150–0217.

3. *Type of submission:* Extension.

4. *The form number if applicable:* Not Applicable.

5. *How often the collection is required or requested:* On occasion and annually.

6. *Who will be required or asked to respond:* Individuals and households; businesses and organizations; State, Local, or Tribal governments.

7. *The estimated number of annual responses:* 4,200.

8. *The estimated number of annual respondents:* 4,200.

9. *An estimate of the total number of hours needed annually to comply with the information collection requirement or request:* 1,087.5.

10. *Abstract:* The information collection activity will garner qualitative customer and stakeholder feedback in an efficient, timely manner, for the purpose of improving service delivery. By qualitative feedback we mean information that provides useful insights on perceptions and opinions, but are not statistical surveys that yield quantitative results that can be generalized to the population of study. This feedback will provide insights into customer or stakeholder perceptions, experiences and expectations, provide an early warning of issues with service, or focus attention on areas where communication, training or changes in operations might improve delivery of products or services. These collections will allow for ongoing, collaborative and actionable communications between the Agency and its customers and stakeholders. It will also allow feedback to contribute directly to the improvement of program management. Feedback collected under this generic clearance will provide useful information, but it will not yield data that can be generalized to the overall population. This type of generic clearance for qualitative information will not be used for quantitative information collections that are designed to yield reliably actionable results, such as monitoring trends over time or documenting program performance. Such data uses require more rigorous designs that address: The target population to which generalizations will be made, the sampling frame, the sample design (including stratification and clustering), the precision requirements or power calculations that justify the proposed sample size, the expected response rate, methods for assessing potential nonresponse bias, the protocols for data collection, and any testing procedures that were or will be undertaken prior to fielding the study. Depending on the degree of influence the results are likely to have, such collections may still be eligible for submission for other generic mechanisms that are designed to yield quantitative results.

Dated at Rockville, Maryland, this 4th day of November 2016.

For the Nuclear Regulatory Commission.

David Cullison,

NRC Clearance Officer, Office of the Chief Information Officer.

[FR Doc. 2016–27225 Filed 11–10–16; 8:45 am]

BILLING CODE 7590–01–P

NUCLEAR REGULATORY COMMISSION

[Docket No. 72–1050; NRC–2016–0231]

Waste Control Specialists LLC's Consolidated Interim Spent Fuel Storage Facility Project

AGENCY: Nuclear Regulatory Commission.

ACTION: Intent to prepare an environmental impact statement and conduct a scoping process; request for comment.

SUMMARY: The U.S. Nuclear Regulatory Commission (NRC) received a license application by letter dated April 28, 2016, from Waste Control Specialists LLC (WCS). By this application, WCS is requesting authorization to construct and operate a Consolidated Interim Storage Facility (CISF) for spent nuclear fuel at WCS's facility in Andrews County, Texas (the proposed action). The WCS intends to store up to 40,000 metric tons uranium in the CISF. The NRC will prepare an environmental impact statement (EIS) to document the potential environmental impacts from the proposed action. As part of the EIS development process, the NRC is seeking comments on the scope of its environmental review.

DATES: The scoping period begins on November 14, 2016, and, if the application is docketed, will end 45 days after publication of a notice of docketing the WCS application.

ADDRESSES: You may submit scoping comments by any of the following methods (unless this document describes a different method for submitting comments on a specific subject):

- *Federal Rulemaking Web site:* Go to *http://www.regulations.gov* and search for Docket ID NRC–2016–0231. Address questions about NRC dockets to Carol Gallagher; telephone: 301–415–3463; email: *Carol.Gallagher@nrc.gov.* For technical questions, contact the individual listed in the **FOR FURTHER INFORMATION CONTACT** section of this document.
- *Mail comments to:* Cindy Bladey, Office of Administration, Mail Stop: OWFN–12–H08, U.S. Nuclear Regulatory Commission, Washington, DC 20555–0001.
- *Email Comments to:* You may email scoping comments to the Project's email address: *WCS_CISF_EIS@nrc.gov.* Comments must be submitted by the closing date of the scoping period to ensure consideration.

For additional direction on obtaining information and submitting comments, see ''Obtaining Information and Submitting Comments'' in the **SUPPLEMENTARY INFORMATION** section of this document.

FOR FURTHER INFORMATION CONTACT: James Park, Office of Nuclear Material Safety and Safeguards, U.S. Nuclear Regulatory Commission, Washington DC, 20555–0001; telephone: 301–415–6954; email: *James.Park@nrc.gov.*

SUPPLEMENTARY INFORMATION:

I. Obtaining Information and Submitting Comments

A. Obtaining Information

Please refer to Docket ID NRC–2016–0231 when contacting the NRC about the availability of information regarding this document. You may obtain publicly-available information related to this action by the following methods:

- *Federal Rulemaking Web site:* Go to *http://www.regulations.gov* and search for Docket ID NRC–2016–0231.
- *NRC's Agencywide Documents Access and Management System (ADAMS):* You may obtain publicly-available documents online in the ADAMS Public Documents collection at *http://www.nrc.gov/reading-rm/adams.html.* To begin the search, select ''ADAMS Public Documents'' and then select ''*Begin Web-based ADAMS Search.*'' For problems with ADAMS, please contact the NRC's Public Document Room (PDR) reference staff at 1–800–397–4209, 301–415–4737, or by email to *pdr.resource@nrc.gov.* In addition, for the convenience of the reader, instructions about obtaining materials referenced in this document are provided in a table in Section VII of this notice entitle, Availability of Documents.
- *NRC'S PDR:* You may examine and purchase copies of public documents at the NRC's PDR, Room O1–F21, One White Flint North, 11555 Rockville Pike, Rockville, Maryland 20852.
- *Project Web page:* Information related to the WCS CISF project can be accessed on the NRC's WCS CISF Web page at: *http://www.nrc.gov/waste/spent-fuel-storage/cis/waste-control-specialist.html.*

B. Submitting Comments

Please include Docket ID NRC–2016–0231 in your comment submission. Written comments may be submitted

during the scoping period as described in the **ADDRESSES** section of the document.

The NRC cautions you not to include identifying or contact information that you do not want to be publicly disclosed in your comment submission. The NRC posts all comment submissions at *http://www.regulations.gov* as well as entering the comment submissions into ADAMS. The NRC does not routinely edit comment submissions to remove identifying or contact information.

If you are requesting or aggregating comments from other persons for submission to the NRC, then you should inform those persons not to include identifying or contact information that they do not want to be publicly disclosed in their comment submission. Your request should state that the NRC does not routinely edit comment submissions to remove such information before making the comment submissions available to the public or entering the comment submissions into ADAMS.

II. Background

By letter dated April 28, 2016, WCS submitted an application to the NRC for a specific license, pursuant to part 72 of title 10 of the *Code of Federal Regulations* (10 CFR), ''Licensing Requirements for the Independent Storage of Spent Nuclear Fuel, High-Level Radioactive Waste, and Reactor-Related Greater Than Class C Waste.'' The WCS is seeking to construct and operate a consolidated interim storage facility (CISF) for spent nuclear fuel at WCS's facility in Andrews County, Texas. As proposed by WCS, the CISF would store up to 40,000 metric tons uranium (MTU) for a 40-year license period. The WCS site is located on Texas Highway 176 West, approximately 32 miles west of Andrews, Texas and 5 miles east of Eunice, New Mexico.

The NRC staff is conducting an acceptance review of WCS's license application to determine if it contains sufficient information for NRC to conduct a detailed technical review. By letter dated June 22, 2016, the NRC staff provided the results of its acceptance review to WCS and requested supplemental information in order to accept the application for detailed review. WCS, by letter dated July 6, 2016, provided its schedule for submitting the supplemental information, noting that it would provide information related to its environmental report (ER) by July 20, 2016. The WCS provided the supplemental information related to its ER and a revised ER on July 20, 2016. The ER can be found on the NRC's project-specific Web page at: *http://www.nrc.gov/waste/spent-fuel-storage/cis/wcs/wcs-app-docs.html.*

In its July 6, 2016, letter, WCS also stated its intent to provide supplemental information for the safety analysis report (SAR), physical security plan (PSP), and emergency response plan (ERP) portions of the license application. If, after receiving and reviewing that supplemental information for the SAR, PSP, and ERP portions of the application, the NRC staff determines that it is sufficient to conduct the detailed technical review, the NRC will publish in the **Federal Register** a notice of docketing of WCS's license application and a notice of opportunity to request a hearing. Accordingly, no requests for hearing should be filed unless and until the NRC has accepted WCS's complete application for detailed review.

By letter dated July 21, 2016, WCS requested that the NRC begin its EIS process as soon as practicable. In an October 7, 2016 response, the NRC staff stated that it would begin the EIS process in advance of its decision on whether to accept the WCS application, because it would further the purposes of the staff's NEPA review. The NRC staff also stated that this decision does not presuppose the outcome of its ongoing acceptance review of the WCS application.

The purpose of this notice is to: (1) Inform the public that the NRC staff will prepare an EIS as part of its review of WCS's license application in accordance with 10 CFR part 51 ''Environmental Protection Regulations for Domestic Licensing and Related Regulatory Functions,'' and (2) provide the public with an opportunity to participate in the environmental scoping process as defined in 10 CFR 51.29. In addition, as outlined in 36 CFR 800.8, ''Coordination with the National Environmental Policy Act,'' the NRC plans to coordinate compliance with Section 106 of the National Historic Preservation Act in meeting the requirements of the National Environmental Policy Act of 1969 (NEPA). The NRC staff also will document its compliance with other applicable federal statutes, such as the Endangered Species Act, in the EIS.

III. Environmental Review

The EIS prepared by the NRC staff will examine the potential environmental impacts of the proposed action. The NRC staff will evaluate the potential impacts to various environmental resources, such as air quality, surface and ground water, transportation, geology and soils, and socioeconomics. The EIS will analyze potential impacts of WCS's proposed facility on historic and cultural resources and on threatened and endangered species. Additionally, the economic, technical, and other benefits and costs of the proposed action and alternatives will be considered in the EIS.

If the application is accepted for a detailed technical review, the NRC staff will also conduct a safety review to determine WCS's compliance with NRC's regulations, including 10 CFR part 20, ''Standards for Protection Against Radiation'' and 10 CFR part 72. The NRC staff's findings would be published in a safety evaluation report.

IV. CISF Construction and Operation

The NRC's Federal action is to either grant or deny WCS's request for a license. If the NRC approves WCS's request, then WCS could proceed with the proposed project—the construction and operation of the CISF—as described in its application and summarized here.

The WCS proposes to construct the CISF on its approximately 60.3 square kilometer (14,900 acre) site in western Andrews County, Texas. On this site, WCS currently operates facilities that process and store certain types of radioactive material, mainly Low-Level Waste (LLW) and Mixed Waste (*i.e.,* waste that is both hazardous waste and LLW). The facility also disposes of hazardous and toxic waste.

The WCS plans to construct the CISF in eight phases. Phase one of the CISF would be designed to provide storage for up to 5,000 MTU of spent nuclear fuel received from commercial nuclear power reactors across the United States. The WCS proposes that small amounts of mixed oxide spent fuels and Greater Than Class C (GTCC) LLW wastes also be stored at the CISF. The WCS stated that it would design each subsequent phase of the CISF to store up to an additional 5,000 MTU for a total of up to 40,000 MTU being stored at the site by the completion of the final phase. Each phase would require NRC review and approval.

The WCS would receive canisters containing spent nuclear fuel from the reactor sites, and once accepted at its site, WCS would transfer them into onsite dry cask storage systems. The WCS stated that it would employ dry cask storage system technology that has been licensed by the NRC pursuant to 10 CFR part 72 at various commercial nuclear reactors across the country. The WCS stated that the dry cask storage systems proposed for use at the CISF would be passive systems (*i.e.,* not

relying on any moving parts) and would provide physical protection, containment, nuclear criticality controls and radiation shielding required for the safe storage of the spent nuclear fuel. The WCS also stated that the dry cask storage systems would be located on top of the concrete pads constructed at the CISF. The WCS is requesting a license for a term of 40 years.

V. Alternatives To Be Evaluated

The EIS will analyze the environmental impacts of the proposed action, the no-action alternative, and reasonable alternatives. A brief description of each is provided below.

No-Action Alternative—The no-action alternative would be to deny the license application. Under this alternative, the NRC would not issue the license and WCS would not construct nor operate the CISF at its site in west Texas. Existing waste handling, storage, and disposal operations at the WCS site unrelated to storage of spent nuclear fuel would continue. This alternative serves as a baseline for the comparison of environmental impacts of the proposed action and the reasonable alternatives.

Proposed action—The proposed Federal action is to issue a license to WCS authorizing the company to construct and operate the CISF. If the NRC approves the license application, it would issue WCS a specific license under the provisions of 10 CFR part 72, and WCS would proceed with the proposed activities.

Alternatives to the Proposed Action—Other alternatives not listed here may be identified during scoping or through the environmental review process.

VI. Scope of the Environmental Review

The NRC staff is conducting a scoping process for the WCS EIS, which begins on the day this notice appears in the **Federal Register**. In accordance with 10 CFR 51.29, the NRC seeks public input to help the NRC determine the appropriate scope of the EIS, including significant environmental issues to be analyzed in depth, as well as those that should be eliminated from detailed study because they are peripheral or are not significant. The NRC staff is planning to publish information related to this action in newspapers serving communities near the WCS site, requesting information and comments during the scoping period from the public. Additionally, if WCS's application is found acceptable for detailed review, the NRC may hold public scoping meetings to receive comments in person in accordance with 10 CFR 51.26. The dates, times, and locations for any meetings will be provided in a future **Federal Register** notice.

After the close of the scoping period, the NRC will prepare a concise summary of its scoping process, the comments received, as well as the NRC's responses. The Scoping Summary Report will be included in NRC's draft EIS as an appendix and sent to each participant in the scoping process for whom the staff has an address.

The WCS EIS will address the potential impacts from the proposed action. The anticipated scope of the EIS will consider both radiological and non-radiological (including chemical) impacts associated with the proposed project and its alternatives. The EIS will also consider unavoidable adverse environmental impacts, the relationship between short-term uses of resources and long-term productivity, and irreversible and irretrievable commitments of resources. The following resource areas have been tentatively identified for analysis in the WCS EIS: Land use, transportation, geology and soils, water resources, ecological resources, air quality and climate change, noise, historical and cultural resources, visual and scenic resources, socioeconomics, public and occupational health, waste management, environmental justice, and cumulative impacts. This list is not intended to be exhaustive, nor is it a predetermination of potential environmental impacts. The EIS will describe the NRC staff's approach and methodology undertaken to determine the resource areas that will be studied in detail and the NRC staff's evaluation of potential impacts to those resource areas.

The NRC encourages members of the public, local, State, Tribal, and Federal government agencies to participate in the scoping process. Written comments may be submitted during the scoping period as described in the **ADDRESSES** and **SUPPLEMENTARY INFORMATION** section of this document. Participation in the scoping process for the WCS EIS does not entitle participants to become parties to any proceeding to which the EIS relates.

In addition to requesting scoping comments through this **Federal Register** notice, the NRC staff also intends to reach out to interested stakeholders, including other Federal and State agencies and Indian Tribes. The NRC staff seeks to identify, among other things, all review and consultation requirements related to the proposed action, and agencies with jurisdiction by law or special expertise with respect to any environmental impact involved or which is authorized to develop and enforce relevant environmental standards. The NRC invites such agencies to participate in the scoping process and, as appropriate, cooperate in the preparation of the EIS.

The NRC staff will continue its environmental review of WCS's license application, and with its contractor, prepare a draft EIS and, as soon as practicable, publish it for public comment. The NRC staff plans to have a public comment period for the draft EIS. Availability of the draft EIS and the dates of the public comment period will be announced in a future **Federal Register** notice. The final EIS will include NRC's responses to public comments received on the draft EIS.

VII. Availability of Documents

The documents identified in this **Federal Register** notice are accessible to interested persons by the means indicated in either the **SUPPLEMENTARY INFORMATION** section of this notice or in the table below.

Document	ADAMS Accession No.
WCS's CISF license application, with Environmental Report	ML16133A070
NRC request for supplemental information	ML16175A277
WCS letter with schedule for response to NRC request for supplemental information	ML16193A314
WCS submittal of initial responses to NRC request for supplemental information	ML16229A537
WCS request for NRC to begin EIS process as soon as practicable	ML16229A340
WCS submittal of second responses to NRC request for supplemental information	ML16265A454
NRC response to WCS request to begin EIS process as soon as practicable	ML16285A317
WCS submittal of third responses to NRC request for supplemental information	ML16294A134

Dated at Rockville, Maryland, this 4th day of November, 2016.

For the U.S. Nuclear Regulatory Commission.

Brian W. Smith,

Deputy Director, Division of Fuel Cycle Safety, Safeguards, and Environmental Review, Office of Nuclear Material Safety and Safeguards.

[FR Doc. 2016–27353 Filed 11–10–16; 8:45 am]

BILLING CODE 7590–01–P

OVERSEAS PRIVATE INVESTMENT CORPORATION

Sunshine Act Meeting Notice

TIME AND DATE: Thursday, December 8, 2016, 2 p.m. (OPEN Portion); 2:15 p.m. (CLOSED Portion).

PLACE: Offices of the Corporation, Twelfth Floor Board Room, 1100 New York Avenue NW., Washington, DC.

STATUS: Meeting OPEN to the Public from 2 p.m. to 2:15 p.m. Closed portion will commence at 2:15 p.m. (approx.).

MATTERS TO BE CONSIDERED:

1. President's Report
2. Minutes of the Open Session of the September 15, 2016 Board of Directors Meeting

FURTHER MATTERS TO BE CONSIDERED (Closed to the Public 2:15 p.m.):

1. Insurance Project—Jordan
2. Insurance Project—Israel
3. Finance Project—Africa, South Asia
4. Finance Project—Africa
5. Minutes of the Closed Session of the September 15, 2016 Board of Directors Meeting
6. Reports
7. Pending Projects

CONTACT PERSON FOR MORE INFORMATION: Information on the meeting may be obtained from Catherine F. I. Andrade at (202) 336–8768, or via email at *Catherine.Andrade@opic.gov.*

Dated: November 9, 2016.

Catherine F. I. Andrade,

Corporate Secretary, Overseas Private Investment Corporation.

[FR Doc. 2016–27439 Filed 11–9–16; 4:15 pm]

BILLING CODE 3210–01–P

POSTAL REGULATORY COMMISSION

[Docket No. CP2017–33]

New Postal Product

AGENCY: Postal Regulatory Commission.

ACTION: Notice.

SUMMARY: The Commission is noticing recent Postal Service filings for the Commission's consideration concerning negotiated service agreements. This notice informs the public of the filing, invites public comment, and takes other administrative steps.

DATES: *Comments are due:* November 15, 2016

ADDRESSES: Submit comments electronically via the Commission's Filing Online system at *http://www.prc.gov.* Those who cannot submit comments electronically should contact the person identified in the **FOR FURTHER INFORMATION CONTACT** section by telephone for advice on filing alternatives.

FOR FURTHER INFORMATION CONTACT: David A. Trissell, General Counsel, at 202–789–6820.

SUPPLEMENTARY INFORMATION:

Table of Contents

I. Introduction
II. Docketed Proceeding(s)

I. Introduction

The Commission gives notice that the Postal Service filed request(s) for the Commission to consider matters related to negotiated service agreement(s). The request(s) may propose the addition or removal of a negotiated service agreement from the market dominant or the competitive product list, or the modification of an existing product currently appearing on the market dominant or the competitive product list.

Section II identifies the docket number(s) associated with each Postal Service request, the title of each Postal Service request, the request's acceptance date, and the authority cited by the Postal Service for each request. For each request, the Commission appoints an officer of the Commission to represent the interests of the general public in the proceeding, pursuant to 39 U.S.C. 505 (Public Representative). Section II also establishes comment deadline(s) pertaining to each request.

The public portions of the Postal Service's request(s) can be accessed via the Commission's Web site (*http://www.prc.gov*). Non-public portions of the Postal Service's request(s), if any, can be accessed through compliance with the requirements of 39 CFR 3007.40.

The Commission invites comments on whether the Postal Service's request(s) in the captioned docket(s) are consistent with the policies of title 39. For request(s) that the Postal Service states concern market dominant product(s), applicable statutory and regulatory requirements include 39 U.S.C. 3622, 39 U.S.C. 3642, 39 CFR part 3010, and 39 CFR part 3020, subpart B. For request(s) that the Postal Service states concern competitive product(s), applicable statutory and regulatory requirements include 39 U.S.C. 3632, 39 U.S.C. 3633, 39 U.S.C. 3642, 39 CFR part 3015, and 39 CFR part 3020, subpart B. Comment deadline(s) for each request appear in section II.

II. Docketed Proceeding(s)

1. *Docket No(s).:* CP2017–33; *Filing Title:* Notice of United States Postal Service of Filing a Functionally Equivalent Global Expedited Package Services 3 Negotiated Service Agreement and Application for Non-Public Treatment of Materials Filed Under Seal; *Filing Acceptance Date:* November 4, 2016; *Filing Authority:* 39 CFR 3015.5; *Public Representative:* Lawrence Fenster; *Comments Due:* November 15, 2016.

This notice will be published in the **Federal Register**.

Stacy L. Ruble,

Secretary.

[FR Doc. 2016–27228 Filed 11–10–16; 8:45 am]

BILLING CODE 7710–FW–P

SECURITIES AND EXCHANGE COMMISSION

[Release No. 34–79241; File No. SR–BX–2016–056]

Self-Regulatory Organizations; NASDAQ BX, Inc.; Notice of Filing and Immediate Effectiveness of Proposed Rule Change To Amend Rule 9400 To Include a Cross-Reference

November 4, 2016.

Pursuant to Section 19(b)(1) of the Securities Exchange Act of 1934 (''Act''),[1] and Rule 19b–4 [2] thereunder, notice is hereby given that, on October 25, 2016, NASDAQ BX, Inc. (''BX'' or ''Exchange'') filed with the Securities and Exchange Commission (''SEC'' or ''Commission'') the proposed rule change as described in Items I and II below, which Items have been prepared by the Exchange. The Commission is publishing this notice to solicit comments on the proposed rule change from interested persons.

I. Self-Regulatory Organization's Statement of the Terms of Substance of the Proposed Rule Change

The Exchange proposes to amend Rule 9400, entitled ''Expedited Client Suspension Proceeding'' to include a cross-reference for clarification.

[1] 15 U.S.C. 78s(b)(1).

[2] 17 CFR 240.19b–4.

The text of the proposed rule change is available on the Exchange's Web site at *http://nasdaq.cchwallstreet.com,* at the principal office of the Exchange, and at the Commission's Public Reference Room.

II. Self-Regulatory Organization's Statement of the Purpose of, and Statutory Basis for, the Proposed Rule Change

In its filing with the Commission, the Exchange included statements concerning the purpose of and basis for the proposed rule change and discussed any comments it received on the proposed rule change. The text of these statements may be examined at the places specified in Item IV below. The Exchange has prepared summaries, set forth in sections A, B, and C below, of the most significant aspects of such statements.

A. Self-Regulatory Organization's Statement of the Purpose of, and Statutory Basis for, the Proposed Rule Change

1. Purpose

The Exchange is filing this proposal to amend Rule 9400, entitled ''Expedited Client Suspension Proceeding'' to include a cross-reference Chapter III, Section 16, entitled ''Disruptive Quoting and Trading Activity Prohibited'' within Rule 9400. The Exchange filed a rule change to adopt an options rule, identical to Rule 2170, which relates to disruptive quoting and trading activity.[3] In that rule change, it stated that ''[t]he Exchange will initiate disciplinary action for violations of Chapter III, Section 16, pursuant to Rule 9400.'' [4] At that time, the Exchange inadvertently did not include the cross-references to Chapter III, Section 16 within Rule 9400. The Exchange proposes to add references to Chapter III, Section 16 within Rule 9400 for clarity. This rule change is non-controversial.

Background

The Exchange filed a rule change to adopt an options rule to clearly prohibit disruptive quoting and trading activity on the Exchange and to permit the Exchange to take prompt action to suspend members or their clients that violate such rule pursuant to Rule 9400.[5] The Exchange had previously adopted Rule 9400 to set forth procedures for issuing suspension orders, immediately prohibiting a member from conducting continued disruptive quoting and trading activity on the Exchange.[6] Rule 9400 provides the Exchange the authority to order a member to cease and desist from providing access to the Exchange to a client of the member that is conducting disruptive quoting and trading activity in violation of Rule 2170. The Exchange also previously adopted Rule 2400 to specifically define and prohibit disruptive equities quoting and trading activity on the Exchange.[7] Chapter III, Section 16 is identical to Rule 2400, however applicable to options. Similarly, Chapter III, Section 16 prohibits members from engaging in or facilitating disruptive options quoting and trading activity on the Exchange.

The Exchange proposes to simply add the cross-references for the options rules alongside the equity rule for clarity. This rule change is consistent with the intent of the rule proposal which adopted Chapter III, Section 16.[8]

2. Statutory Basis

The Exchange believes that its proposal is consistent with Section 6(b) of the Act,[9] in general, and furthers the objectives of Section 6(b)(5) of the Act,[10] in particular, in that the rules of the Exchange are designed to prevent fraudulent and manipulative acts and practices, it [sic] is designed to promote just and equitable principles of trade, to remove impediments to and perfect the mechanism of a free and open market and a national market system, and, in general to protect investors and the public interest by making clear within Rule 9400 that violations of Chapter III, Section 16 are subject to disciplinary action pursuant to Rule 9400 as stated in the Exchange's rule filing.[11] This cross-reference will provide clarity to members and ease of reference to the corresponding options rule. The proposed rule change is non-controversial. The addition of the cross-reference is for clarity.

B. Self-Regulatory Organization's Statement on Burden on Competition

The Exchange does not believe that the proposed rule change will impose any burden on competition not necessary or appropriate in furtherance of the purposes of the Act. This non-controversial rule change will merely add the reference to the options rule next to the current reference for the equity rule to make clear, as noted in the rule changes, that violations of either rule relating to disruptive quoting and trading activity, will be disciplined pursuant to Rule 9400.

C. Self-Regulatory Organization's Statement on Comments on the Proposed Rule Change Received From Members, Participants, or Others

No written comments were either solicited or received.

III. Date of Effectiveness of the Proposed Rule Change and Timing for Commission Action

Because the foregoing proposed rule change does not: (i) Significantly affect the protection of investors or the public interest; (ii) impose any significant burden on competition; and (iii) become operative for 30 days from the date on which it was filed, or such shorter time as the Commission may designate, it has become effective pursuant to Section 19(b)(3)(A) of the Act [12] and Rule 19b–4(f)(6) thereunder.[13]

A proposed rule change filed pursuant to Rule 19b–4(f)(6) under the Act [14] normally does not become operative for 30 days after the date of its filing. However, Rule 19b–4(f)(6) [15] permits the Commission to designate a shorter time if such action is consistent with the protection of investors and the public interest. The Exchange believes that waiving the 30-day operative delay is consistent with the protection of investors and the public interest because it would allow the Exchange to immediately add the cross-reference within Rule 9400 which would provide clarity to members. The Exchange notes that a rule change to permit Rule 9400 to apply to violations of Chapter III, Section 16 was previously filed with the Commission. However, that filing failed to amend the rule text of Rule 9400 and only discussed the intended application of Rule 9400 to violations of Chapter III, Section 16 in the purpose section of the Form 19b–4.

The text of the rule governs what actions the Exchange can take.[16] However, because the description in the original filing sets forth what the Exchange intended the rule to cover, and this proposed rule change corrects an oversight by the Exchange in the

[3] *See* Securities and Exchange Release No. 78107 (June 21, 2016), 81 FR 41619 (June 27, 2016) (SR–BX–2016–036).

[4] *See* Securities and Exchange Release No. 78107 (June 21, 2016), 81 FR 41619, 41623 (June 27, 2016) (SR–BX–2016–036). Rule 9400 is located within the Code of Procedure rules which apply to both equities and options violations.

[5] *See* note 3.

[6] *See* Securities and Exchange Release No. 77914 (May 25, 2016), 81 FR 35106 (June 1, 2016) (SR–BX–2016–028).

[7] *See* note 3.

[8] *See* note 3.

[9] 15 U.S.C. 78f(b).

[10] 15 U.S.C. 78f(b)(5).

[11] *See* note 4.

[12] 15 U.S.C. 78s(b)(3)(A).

[13] 17 CFR 240.19b–4(f)(6).

[14] 17 CFR 240.19b–4(f)(6).

[15] 17 CFR 240.19b–4(f)(6).

[16] *See* Section 6(b)(1) of the Act. 15 U.S.C. 78f(b)(1).

previous filing, the Commission believes that waiving the 30-day operative delay[17] is consistent with the protection of investors and the public interest and designates the proposal operative on filing.

At any time within 60 days of the filing of the proposed rule change, the Commission summarily may temporarily suspend such rule change if it appears to the Commission that such action is necessary or appropriate in the public interest, for the protection of investors, or otherwise in furtherance of the purposes of the Act. If the Commission takes such action, the Commission will institute proceedings to determine whether the proposed rule change should be approved or disapproved.

IV. Solicitation of Comments

Interested persons are invited to submit written data, views and arguments concerning the foregoing, including whether the proposed rule change is consistent with the Act. Comments may be submitted by any of the following methods:

Electronic Comments

- Use the Commission's Internet comment form (*http://www.sec.gov/rules/sro.shtml);* or
- Send an email to *rule-comments@sec.gov.* Please include File Number SR–BX–2016–056 on the subject line.

Paper Comments

- Send paper comments in triplicate to Secretary, Securities and Exchange Commission, 100 F Street NE., Washington, DC 20549–1090.

All submissions should refer to File Number SR–BX–2016–056. This file number should be included on the subject line if email is used. To help the Commission process and review your comments more efficiently, please use only one method. The Commission will post all comments on the Commission's Internet Web site (*http://www.sec.gov/rules/sro.shtml).* Copies of the submission, all subsequent amendments, all written statements with respect to the proposed rule change that are filed with the Commission, and all written communications relating to the proposed rule change between the Commission and any person, other than those that may be withheld from the public in accordance with the provisions of 5 U.S.C. 552, will be available for Web site viewing and printing in the Commission's Public Reference Room, 100 F Street NE., Washington, DC 20549, on official business days between the hours of 10:00 a.m. and 3:00 p.m. Copies of the filing also will be available for inspection and copying at the principal office of the Exchange. All comments received will be posted without change; the Commission does not edit personal identifying information from submissions. You should submit only information that you wish to make available publicly. All submissions should refer to File Number SR–BX–2016–056 and should be submitted on or before December 5, 2016.

For the Commission, by the Division of Trading and Markets, pursuant to delegated authority.[18]

Brent J. Fields,

Secretary.

[FR Doc. 2016–27151 Filed 11–10–16; 8:45 am]

BILLING CODE 8011–01–P

[17] For purposes only of waiving the 30-day operative delay, the Commission has considered the proposed rule's impact on efficiency, competition, and capital formation. *See* 15 U.S.C. 78c(f).

[18] 17 CFR 200.30–3(a)(12).

SECURITIES AND EXCHANGE COMMISSION

[Release No. 34–79251; File No. SR–NASDAQ–2016–149]

Self-Regulatory Organizations; The NASDAQ Stock Market LLC; Notice of Filing and Immediate Effectiveness of Proposed Rule Change To Amend the Exchange's Market Access and Routing Subsidy Program

November 7, 2016.

Pursuant to Section 19(b)(1) of the Securities Exchange Act of 1934 (''Act''),[1] and Rule 19b–4 thereunder,[2] notice is hereby given that on October 31, 2016, The NASDAQ Stock Market LLC (''Nasdaq'' or ''Exchange'') filed with the Securities and Exchange Commission (''SEC'' or ''Commission'') the proposed rule change as described in Items I, II, and III, below, which Items have been prepared by the Exchange. The Commission is publishing this notice to solicit comments on the proposed rule change from interested persons.

I. Self-Regulatory Organization's Statement of the Terms of Substance of the Proposed Rule Change

The Exchange proposes to amend the Exchange's transaction fees at Chapter XV, Section 2 entitled ''NASDAQ Options Market—Fees and Rebates,'' which governs pricing for Nasdaq Participants using the NASDAQ Options Market (''NOM''), Nasdaq's facility for executing and routing standardized equity and index options. The Exchange proposes to amend its subsidy program, the Market Access and Routing Subsidy or ''MARS,'' for NOM Participants that provide certain order routing functionalities[3] to other NOM Participants and/or use such functionalities themselves.

While changes to the Pricing Schedule pursuant to this proposal are effective upon filing, the Exchange has designated these changes to be operative on November 1, 2016.

The text of the proposed rule change is available on the Exchange's Web site at *http://nasdaq.cchwallstreet.com,* at the principal office of the Exchange, and at the Commission's Public Reference Room.

II. Self-Regulatory Organization's Statement of the Purpose of, and Statutory Basis for, the Proposed Rule Change

In its filing with the Commission, the Exchange included statements concerning the purpose of and basis for the proposed rule change and discussed any comments it received on the proposed rule change. The text of these statements may be examined at the places specified in Item IV below. The Exchange has prepared summaries, set forth in sections A, B, and C below, of the most significant aspects of such statements.

A. Self-Regulatory Organization's Statement of the Purpose of, and Statutory Basis for, the Proposed Rule Change

1. Purpose

NOM proposes to amend the MARS subsidy program which pays a subsidy to NOM Participants that provide certain order routing functionalities to other NOM Participants and/or use such functionalities themselves. Generally, under MARS, the Exchange pays participating NOM Participants to subsidize their costs of providing routing services to route orders to NOM. The Exchange believes that MARS will continue to attract higher volumes of electronic equity and ETF options volume to the Exchange from non-NOM

[1] 15 U.S.C. 78s(b)(1).

[2] 17 CFR 240.19b–4.

[3] The order routing functionalities permit a NOM Participant to provide access and connectivity to other Participants as well as utilize such access for themselves. The Exchange notes that one NOM Participant is eligible for payments under MARS, while another NOM Participant might potentially be liable for transaction charges associated with the execution of the order, because those orders were delivered to the Exchange through a NOM Participant's connection to the Exchange and that Participant qualified for the MARS Payment.

Participants as well as NOM Participants.

The Exchange proposes to amend Chapter XV, Section 2(6) to: (1) Provide another method to qualify for MARS System Eligibility; (2) expand the MARS Payment tiers; and (3) make clarifying changes to the rule text.

Amendment to MARS System Eligibility

Today, to qualify for MARS, a NOM Participant's routing system (hereinafter ''System'') is required to meet certain criteria. Specifically the Participant's System is required to: (1) Enable the electronic routing of orders to all of the U.S. options exchanges, including NOM; (2) provide current consolidated market data from the U.S. options exchanges; and (3) be capable of interfacing with NOM's API to access current NOM match engine functionality. The NOM Participant's System would also need to cause NOM to be one of the top three default destination exchanges for individually executed marketable orders if NOM is at the national best bid or offer (''NBBO''), regardless of size or time, but allow any user to manually override NOM as the default destination on an order-by-order basis.

The Exchange requires NOM Participants desiring to participate in MARS [4] to complete a form, in a manner prescribed by the Exchange, and reaffirm their information on a quarterly basis to the Exchange. Any NOM Participant is permitted to apply for MARS, provided the above-referenced requirements are met, including a robust and reliable System. The Participant is solely responsible for implementing and operating its System.

The Exchange proposes to amend the requirements for MARS System Eligibility to continue to require the Participant's System to cause NOM to be the one of the top three default destination exchanges for individually executed marketable orders if NOM is at the national best bid or offer (''NBBO''), regardless of size or time. In the alternative, the Exchange proposes to permit a Participant to be eligible if the Participant's System causes NOM to be the one of the top three default destination exchanges for orders that establish a new NBBO on NOM's Order Book. The NOM Participant may become eligible for MARS System Eligibility by complying with one of the two options proposed herein.

With respect to the new language, an example would be if the national best bid was 10 and national best offer was 20 and a NOM Participant bid 15 and that quote established a new NBBO on NOM's Order Book, that activity would also be considered eligible. The Exchange believes that this alternative method to qualify for MARS System Eligibility will further incentivize NOM Participants to provide liquidity at the NBBO on NOM to qualify for MARS.

Amendment to MARS Payment

Today, NOM Participants that have System Eligibility and have routed the requisite number of Eligible Contracts daily in a month (Average Daily Volume), which were executed on NOM, are entitled to a MARS Payment. For the purpose of qualifying for the MARS Payment, Eligible Contracts may include Firm,[5] Non-NOM Market Maker,[6] Broker-Dealer [7] or Joint Back Office or ''JBO'' [8] equity option orders that add liquidity and are electronically delivered and executed.[9]

Today, the Exchange pays the following MARS Payments according to Average Daily Volume (''ADV'') [10] submitted on NOM:

Tiers	Average Daily Volume (''ADV'')	MARS payment
1	2,500	$0.07
2	5,000	0.09
3	10,000	0.11

Also, NOM Participants that qualify for Customer and Professional Penny Pilot Options Rebate to Add Liquidity Tier 8 in Chapter XV, Section 2(1) will receive $0.09 per contract in addition to any MARS Payment tier on MARS Eligible Contracts the NOM Participant qualifies for in a given month. The specified MARS Payment is paid on all executed Eligible Contracts that add liquidity, which are routed to NOM through a participating NOM Participant's System and meet the requisite Eligible Contracts ADV. No payment will be made with respect to orders that are routed to NOM, but not executed.

The Exchange proposes to add a new Tier 4 with an ADV of 20,000 contracts and pay a MARS Payment of $0.15 per contract. The Exchange also proposes to rename the aforementioned tier 4 payment along with the current tier 1 through 3 payments as MARS Payment (Penny). The three existing payment tiers, along with the aforementioned new tier 4 payment tier of $0.15 per contract would be paid for Penny Pilot Options transactions that qualify for the MARS Payment tier program.

Additionally, the Exchange proposes 4 new tiers for Non-Penny Pilot Options transactions as follows: The 4 new tiers for MARS Payment (Non-Penny) shall be: Tier 1 with an ADV of 2,500 contracts would pay $0.15 per contract, tier 2 with an ADV of 5,000 contracts would pay $0.20 per contract, tier 3 with an ADV of 10,000 would pay $0.30 per contract and tier 4 with an ADV of 20,000 contracts would pay $0.50 per contract. The Exchange would continue to pay an additional $0.09 per contract in addition to any MARS Payment tier on MARS Eligible Contracts in a given month on the Non-Penny Pilot Options transactions, provided the NOM Participant qualified for the Customer and Professional Penny Pilot Options Rebate to Add Liquidity Tier 8 in Chapter XV, Section 2(1). The Exchange believes that MARS will continue to attract higher volumes of electronic equity and ETF options volume to the Exchange from non-NOM Participants as well as NOM Participants. This amendment may attract additional Non-Penny Pilot Options volume.

[4] For example, a NOM Participant that desires to qualify for MARS in November must complete the form and submit it to the Exchange no later than the last business day of November. Such form will require the NOM Participant to identify the NOM Participant seeking the MARS Payment and must list, among other things, the connections utilized by the NOM Participant to provide Exchange access to other NOM Participants and/or itself. MARS Payments would be made one month in arrears (i.e., a MARS Payment earned for activity in November would be paid to the qualifying NOM Participant in December), as is the case with all other transactional payments and assessments made by the Exchange.

[5] The term ''Firm'' or (''F'') applies to any transaction that is identified by a Participant for clearing in the Firm range at OCC.

[6] The term ''Non-NOM Market Maker'' or (''O'') is a registered market maker on another options exchange that is not a NOM Market Maker. A Non-NOM Market Maker must append the proper Non-NOM Market Maker designation to orders routed to NOM.

[7] The term ''Broker-Dealer'' or (''B'') applies to any transaction which is not subject to any of the other transaction fees applicable within a particular category.

[8] The term ''Joint Back Office'' or ''JBO'' applies to any transaction that is identified by a Participant for clearing in the Firm range at OCC and is identified with an origin code as a JBO. A JBO will be priced the same as a Broker-Dealer as of September 1, 2014. A JBO participant is a Participant that maintains a JBO arrangement with a clearing broker-dealer (''JBO Broker'') subject to the requirements of Regulation T Section 220.7 of the Federal Reserve System as further discussed in Chapter XIII, Section 5.

[9] Eligible Contracts do not include Mini-Option orders. Mini Options are further specified in Chapter XV, Section 2(4).

[10] Average Daily Volume is all Eligible Contracts daily in a month aggregating Penny and Non-Penny Pilot Options.

Clarifying Amendments

Today, a Participant will not be entitled to receive any other revenue from the Exchange for the use of its System, specifically with respect to orders routed to NOM. The Exchange believes that the MARS Payment will subsidize the costs of NOM Participants in providing the routing services. The Exchange proposes to make clear that Participant will not be entitled to receive any other revenue for the use of its System from the Exchange. The Exchange believes this new rule text provides clarity. The Exchange also proposes to add a missing period into the rule text.

2. Statutory Basis

The Exchange believes that its proposal is consistent with Section 6(b) of the Act,[11] in general, and furthers the objectives of Sections 6(b)(4) and 6(b)(5) of the Act,[12] in particular, in that it provides for the equitable allocation of reasonable dues, fees and other charges among Participants and issuers and other persons using any facility or system which the Exchange operates or controls, and is not designed to permit unfair discrimination between customers, issuers, brokers, or dealers.

The Commission and the courts have repeatedly expressed their preference for competition over regulatory intervention in determining prices, products, and services in the securities markets. In Regulation NMS, while adopting a series of steps to improve the current market model, the Commission highlighted the importance of market forces in determining prices and SRO revenues and, also, recognized that current regulation of the market system ''has been remarkably successful in promoting market competition in its broader forms that are most important to investors and listed companies.'' [13]

Likewise, in *NetCoalition* v. *Securities and Exchange Commission* [14] (''NetCoalition'') the D.C. Circuit upheld the Commission's use of a market-based approach in evaluating the fairness of market data fees against a challenge claiming that Congress mandated a cost-based approach.[15] As the court emphasized, the Commission ''intended in Regulation NMS that 'market forces, rather than regulatory requirements' play a role in determining the market data . . . to be made available to investors and at what cost.'' [16]

Further, ''[n]o one disputes that competition for order flow is 'fierce.' . . . As the SEC explained, '[i]n the U.S. national market system, buyers and sellers of securities, and the broker-dealers that act as their order-routing agents, have a wide range of choices of where to route orders for execution'; [and] 'no exchange can afford to take its market share percentages for granted' because 'no exchange possesses a monopoly, regulatory or otherwise, in the execution of order flow from broker dealers'. . . .'' [17] Although the court and the SEC were discussing the cash equities markets, the Exchange believes that these views apply with equal force to the options markets.

Amendment to MARS System Eligibility

The Exchange's proposal to amend the requirements for MARS System Eligibility to continue to permit in the alternative for a Participant to be eligible if the Participant's System causes NOM to be the one of the top three default destination exchanges for orders that establish a new NBBO on NOM's Order Book is reasonable because the amendment will continue to incentivize NOM Participants to quote at the NBBO on NOM to qualify for MARS. The Exchange believes that requiring NOM Participants to maintain their Systems according to the various requirements set forth by the Exchange in order to qualify for MARS is reasonable because the Exchange seeks to encourage market participants to send higher volumes of orders to NOM, which will contribute to the Exchange's depth of book as well as to the top of book liquidity. MARS is designed to enhance the competitiveness of the Exchange, particularly with respect to those exchanges that offer their own front-end order entry system or one they subsidize in some manner.[18] The Exchange also notes that the Chicago Board of Options Exchange, Inc. (''CBOE'') currently offers a similar Order Routing Subsidy (''ORS''), which, similar to the current proposal, allows CBOE Participants to enter into subsidy arrangements with CBOE Trading Permit Holders (''TPHs'') that provide certain order routing functionalities to other CBOE TPHs and/or use such functionalities themselves.[19]

The Exchange's proposal to amend the requirements for MARS System Eligibility to further permit, in the alternative, for a Participant to be eligible if the Participant's System causes NOM to be the one of the top three default destination exchanges for orders that establish a new NBBO on NOM's Order Book is equitable and not unfairly discriminatory because these requirements will uniformly apply to all Participants desiring to qualify for MARS.

Amendments to MARS Eligible Contracts

The Exchange's proposal to add a new Tier 4 with an ADV of 20,000 contracts and pay a MARS Payment of $0.15 per contract and designate all remaining pricing as Penny Pilot Options transactions pricing and adopt new pricing for Non-Penny Pilot Options volume is reasonable because the amendments will attract higher volumes of electronic equity and ETF options volume to the Exchange, which will benefit all NOM Participants by offering greater price discovery, increased transparency, and an increased opportunity to trade on the Exchange. The expanded MARS Payments should enhance the competitiveness of the Exchange, particularly with respect to those exchanges that offer their own front-end order entry system or one they subsidize in some manner. The amendment to add Tier 4 will incentivize NOM Participants to achieve an even higher Penny Pilot Options rebate, provided the NOM Participant is eligible for MARS. Further, the tier structure will allow NOM Participants to price their services at a level that will enable them to attract order flow from market participants who would otherwise utilize an existing front-end order entry mechanism offered by the Exchange's competitors instead of incurring the cost in time and money to develop their own internal systems to be able to deliver orders directly to the Exchange's System.

The Exchange's proposal to add a new Tier 4 with an ADV of 20,000 contracts and pay a MARS Payment of $0.15 per contract and designate all remaining pricing as Penny Pilot Options transactions pricing and adopt new pricing for Non-Penny Pilot Options volume is equitable and not unfairly

[11] 15 U.S.C. 78f(b).

[12] 15 U.S.C. 78f(b)(4) and (5).

[13] Securities Exchange Act Release No. 51808 (June 9, 2005), 70 FR 37496, 37499 (June 29, 2005) (''Regulation NMS Adopting Release'').

[14] *NetCoalition* v. *SEC,* 615 F.3d 525 (D.C. Cir. 2010).

[15] *See NetCoalition,* at 534–535.

[16] *Id.* at 537.

[17] *Id.* at 539 (quoting Securities Exchange Act Release No. 59039 (December 2, 2008), 73 FR 74770, 74782–83 (December 9, 2008) (SR–NYSEArca-2006–21)).

[18] *See, e.g., supra* note 10; Securities Exchange Act Release No. 34–54121 (July 10, 2006), 71 FR 40566 (July 17, 2006) (SR–ISE–2006–31) (describing PrecISE, which is a front-end, order entry application for trading options utilized by International Securities Exchange LLC).

[19] *See* CBOE's Fees Schedule. CBOE's program permits both CBOE Participants and CBOE non-Participants to be eligible for a rebate. CBOE Participants are eligible to receive exchange transaction fees on transactions that earn a non-CBOE Participant a subsidy payment.

discriminatory because the Exchange will uniformly pay all NOM Participants the rebates specified in the proposed MARS Payment tiers provided the NOM Participant has executed the requisite number of Eligible Contracts. Moreover, the Exchange believes that the proposed MARS Payments offered by the Exchange are equitable and not unfairly discriminatory because any qualifying NOM Participant that offers market access and connectivity to the Exchange and/or utilize such functionality themselves may earn the MARS Payment for all Eligible Contracts.

The Exchange's proposal to adopt new Non-Penny Pilot Options MARS Payments tiers with higher rebates as compared to the Penny Pilot Options MARS Payment tiers is reasonable because the amendments will attract higher volumes of electronic equity and ETF options volume to the Exchange, which will benefit all NOM Participants by offering greater price discovery, increased transparency, and an increased opportunity to trade on the Exchange. The expanded MARS Payments should enhance the competitiveness of the Exchange, particularly with respect to those exchanges that offer their own front-end order entry system or one they subsidize in some manner. Today the Exchange bifurcates Penny and Non-Penny Options pricing. The Exchange pays higher Non-Penny Pilot Options rebates as compared to Penny Pilot Options rebates.[20] Penny Pilot Options are more liquid and traditionally are assessed lower fees and paid lower rebates. The Exchange believes it is reasonable to pay higher rebates for Non-Penny Pilot Options which are assessed higher transaction fees on the Exchange.[21]

The Exchange's proposal to adopt new Non-Penny Pilot Options MARS Payments tiers with higher rebates as compared to the Penny Pilot Options MARS Payment tiers is equitable and not unfairly discriminatory because the Exchange will uniformly pay all NOM Participants the MARS Payments specified in the proposed MARS Payment tiers for Penny and Non-Penny Pilot Options provided the NOM Participant has executed the requisite number of Eligible Contracts.

Clarifying Amendments

The Exchange's proposal to amend the rule text to make clear that a Participant will not be entitled to receive any other revenue for the use of its System from the Exchange and add a missing period into the rule text is reasonable, equitable and not unfairly discriminatory because it will clarify existing rule text for all NOM Participants.

B. Self-Regulatory Organization's Statement on Burden on Competition

The Exchange does not believe that the proposed rule change will impose any burden on competition not necessary or appropriate in furtherance of the purposes of the Act. In terms of inter-market competition, the Exchange notes that it operates in a highly competitive market in which market participants can readily favor competing venues if they deem fee levels at a particular venue to be excessive, or rebate opportunities available at other venues to be more favorable. In such an environment, the Exchange must continually adjust its fees to remain competitive with other exchanges and with alternative trading systems that have been exempted from compliance with the statutory standards applicable to exchanges. Because competitors are free to modify their own fees in response, and because market participants may readily adjust their order routing practices, the Exchange believes that the degree to which fee changes in this market may impose any burden on competition is extremely limited. In sum, if the changes proposed herein are unattractive to market participants, it is likely that the Exchange will lose market share as a result. Accordingly, the Exchange does not believe that the proposed changes will impair the ability of members or competing order execution venues to maintain their competitive standing in the financial markets.

Amendment to MARS System Eligibility

The Exchange's proposal to amend the requirements for MARS System Eligibility to further permit, in the alternative, for a Participant to be eligible if the Participant's System causes NOM to be the one of the top three default destination exchanges for orders that establish a new NBBO on NOM's Order Book does not impose an undue burden on intra-market competition because these requirements will uniformly apply to all Participants desiring to qualify for MARS.

Amendments to MARS Eligible Contracts

The Exchange's proposal to add a new Tier 4 with an ADV of 20,000 contracts and pay a MARS Payment of $0.15 per contract and designate this, along with all remaining pricing as Penny Pilot Options transactions pricing and adopt new pricing for Non-Penny Pilot Options volume does not impose an undue burden on intra-market competition because the Exchange will uniformly pay all NOM Participants the rebates specified in the proposed MARS Payment tiers provided the NOM Participant has executed the requisite number of Eligible Contracts. Moreover, the Exchange believes that the proposed MARS Payments offered by the Exchange are equitable and not unfairly discriminatory because any qualifying NOM Participant that offers market access and connectivity to the Exchange and/or utilizes such functionality themselves may earn the MARS Payment for all Eligible Contracts.

The Exchange's proposal to adopt new Non-Penny Pilot Options MARS Payments tiers with higher rebates as compared to the Penny Pilot Options MARS Payment tiers does not impose an undue burden on intra-market competition because the Exchange will uniformly pay all NOM Participants the MARS Payments specified in the proposed MARS Payment tiers for Penny and Non-Penny Pilot Options provided the NOM Participant has executed the requisite number of Eligible Contracts.

Clarifying Amendments

The Exchange's proposal to amend the rule text to make clear that a Participant will not be entitled to receive any other revenue for the use of its System from the Exchange and add a missing period into the rule text does not impose an undue burden on intra-market competition because it will clarify existing rule text for all NOM Participants.

C. Self-Regulatory Organization's Statement on Comments on the Proposed Rule Change Received From Members, Participants, or Others

No written comments were either solicited or received.

III. Date of Effectiveness of the Proposed Rule Change and Timing for Commission Action

The foregoing rule change has become effective pursuant to Section 19(b)(3)(A)(ii) of the Act.[22]

At any time within 60 days of the filing of the proposed rule change, the Commission summarily may temporarily suspend such rule change if it appears to the Commission that such action is: (i) Necessary or appropriate in the public interest; (ii) for the protection of investors; or (iii) otherwise in furtherance of the purposes of the Act. If the Commission takes such action, the

[20] *See* NOM Rules at Chapter XV, Section 2(1).

[21] *Id.*

[22] 15 U.S.C. 78s(b)(3)(A)(ii).

Commission shall institute proceedings to determine whether the proposed rule should be approved or disapproved.

IV. Solicitation of Comments

Interested persons are invited to submit written data, views, and arguments concerning the foregoing, including whether the proposed rule change is consistent with the Act. Comments may be submitted by any of the following methods:

Electronic Comments

- Use the Commission's Internet comment form (*http://www.sec.gov/rules/sro.shtml*); or
- Send an email to *rule-comments@sec.gov.* Please include File Number SR–NASDAQ–2016–149 on the subject line.

Paper Comments

- Send paper comments in triplicate to Brent J. Fields, Secretary, Securities and Exchange Commission, 100 F Street NE., Washington, DC 20549–1090.

All submissions should refer to File Number SR–NASDAQ–2016–149. This file number should be included on the subject line if email is used. To help the Commission process and review your comments more efficiently, please use only one method. The Commission will post all comments on the Commission's Internet Web site (*http://www.sec.gov/rules/sro.shtml*).

Copies of the submission, all subsequent amendments, all written statements with respect to the proposed rule change that are filed with the Commission, and all written communications relating to the proposed rule change between the Commission and any person, other than those that may be withheld from the public in accordance with the provisions of 5 U.S.C. 552, will be available for Web site viewing and printing in the Commission's Public Reference Room, 100 F Street NE., Washington, DC 20549, on official business days between the hours of 10:00 a.m. and 3:00 p.m. Copies of the filing also will be available for inspection and copying at the principal office of the Exchange. All comments received will be posted without change; the Commission does not edit personal identifying information from submissions. You should submit only information that you wish to make available publicly.

All submissions should refer to File Number SR–NASDAQ–2016–149 and should be submitted on or before December 5, 2016.

For the Commission, by the Division of Trading and Markets, pursuant to delegated authority.[23]

Brent J. Fields,

Secretary.

[FR Doc. 2016–27235 Filed 11–10–16; 8:45 am]

BILLING CODE 8011–01–P

[23] 17 CFR 200.30–3(a)(12).

SECURITIES AND EXCHANGE COMMISSION

[Release No. 34–79253; File No. SR–ISEGemini–2016–13]

Self-Regulatory Organizations; ISE Gemini, LLC; Notice of Filing and Immediate Effectiveness of Proposed Rule Change To Make a Number of Non-Controversial and Technical Changes

November 7, 2016.

Pursuant to Section 19(b)(1) of the Securities Exchange Act of 1934 (''Act''),[1] and Rule 19b–4 thereunder,[2] notice is hereby given that on October 26, 2016, ISE Gemini, LLC (''ISE Gemini'' or ''Exchange'') filed with the Securities and Exchange Commission (''SEC'' or ''Commission'') the proposed rule change as described in Items I and II below, which Items have been prepared by the Exchange. The Commission is publishing this notice to solicit comments on the proposed rule change from interested persons.

I. Self-Regulatory Organization's Statement of the Terms of Substance of the Proposed Rule Change

The Exchange proposes to make a number of non-controversial and technical changes to its rules as described in more detail below.

The text of the proposed rule change is available on the Exchange's Web site at *www.ise.com,* at the principal office of the Exchange, and at the Commission's Public Reference Room.

II. Self-Regulatory Organization's Statement of the Purpose of, and Statutory Basis for, the Proposed Rule Change

In its filing with the Commission, the Exchange included statements concerning the purpose of and basis for the proposed rule change and discussed any comments it received on the proposed rule change. The text of these statements may be examined at the places specified in Item IV below. The Exchange has prepared summaries, set forth in sections A, B, and C below, of the most significant aspects of such statements.

A. Self-Regulatory Organization's Statement of the Purpose of, and Statutory Basis for, the Proposed Rule Change

1. Purpose

The Exchange is proposing to make a number of non-controversial changes and technical corrections to its rules. Specifically, these changes are all to correct typographical errors and delete obsolete rule text.[3] The changes are described in more detail below.

1. No Bid Options/Limit Price

Rule 713(b), which deals with priority of orders, provides that if the lowest offer for any options contract is $0.05 then no member shall enter a market order to sell that series, and any such market order shall be considered a limit order to sell at a price of $0.05. This provision is intended to prevent members from submitting market orders to sell in no bid series, which could execute at a price of $0.00, and to instead convert those orders to limit orders with a limit price equal to the minimum trading increment, *i.e.,* $0.05 for most option classes.[4] A ''no bid'' or ''zero bid'' series refers to an option where the bid price is $0.00. Series of options quoted no bid are usually deep out-of-the-money series that are perceived as having little if any chance of expiring in-the-money. For options that trade in regular nickel increments, a best offer of $0.05 corresponds to a best bid of $0.00, *i.e.* one minimum trading increment below the offer. However, option series may be no bid with other offer prices as well. For example, an option class would be considered no bid if it is quoted at $0.00 (bid)–$0.15 (offer). In order to avoid having these orders execute at a price of $0.00, the Exchange proposes to clarify that Rule 713(b) applies to all option classes that are quoted no bid, rather than just those option classes that have an offer of $0.05. Currently, options exchanges have in place a pilot (the ''Penny Pilot'') to quote and trade options in one cent increments, lowering the minimum trading increment from $0.05 in certain symbols. The Exchange therefore

[1] 15 U.S.C. 78s(b)(1).

[2] 17 CFR 240.19b–4.

[3] *See also* Securities Exchange Act Release No. 73808 (December 10, 2014), 79 FR 74797 (December 16, 2014) (SR–ISE–2014–54) (order approving the same proposed rule changes to the International Securities Exchange, LLC (''ISE'') rulebook).

[4] Symbols not included in the Penny Pilot generally trade in $0.05 increments if the options contract is trading at less than $3.00 per option, and $0.10 increments if the options contract is trading at $3.00 per option or higher. *See* Rule 710.

proposes to amend Rule 713(b) to clarify that the Exchange will put a limit price equal to the minimum trading increment on market orders to sell a no bid option series. For example, if the deep out-of-the-money SPY December $230.00 call, which is traded in penny increments, is quoted at $0.00 (bid)–$0.03 (offer), a market order to sell would instead be treated as a limit order to sell at a price of $0.01.

2. Non-Displayed Penny Orders and Quotes

The Exchange currently has rules in place that allow members to enter non-displayed orders and quotes in penny increments in designated options with a minimum trading increment greater than one cent (''non-displayed penny orders and quotes'').[5] A non-displayed penny order or quote is available for execution at its penny price but is displayed at the closest minimum trading increment that does not violate the limit price.[6] The Exchange does not offer non-displayed penny orders or quotes and therefore proposes to delete obsolete references to this order type from its rules. First, the Exchange proposes to delete Rule 715(b)(4), which defines non-displayed penny orders. Second, the Exchange proposes to delete language in Rule 804(b)(1) and Rule 805(a) that permits market makers to enter non-displayed penny quotes and orders, respectively. Third, the Exchange proposes to delete language in Supplementary Material .06 to Rule 716 concerning split prices for non-displayed penny orders and quotes entered into the Facilitation and Solicitation Mechanisms. Finally, the Exchange proposes to delete language in Supplementary Material .03 to Rule 717 concerning the execution of non-displayed penny orders that an Electronic Access Member represents as agent against principal orders and orders solicited from other broker dealers.

3. Customer Participation Orders

A customer participation order (''CPO'') is an order type that can be used by Public Customers[7] to participate in the Price Improvement Mechanism (''PIM'').[8] Upon entry of a Crossing Transaction into the PIM,[9] a broadcast message is sent to all members, who then have 500 milliseconds to enter orders that indicate the size and price at which they want to participate in the execution (''Improvement Orders'').[10] The CPO is an instruction to the member to enter an Improvement Order on behalf of a Public Customer. Specifically, a CPO is a limit order on behalf of a Public Customer that, in addition to the limit order price in standard increments, includes a price stated in one cent increments at which the Public Customer wishes to participate in trades executed in the same options series in penny increments through the PIM.[11] The Exchange does not offer CPOs and therefore proposes to delete obsolete references to this order type from its rules. The Exchange first proposes to delete Rule 715(f), which defines CPOs. Furthermore, the Exchange proposes to remove two references to CPOs in other rules. Specifically, the Exchange proposes to remove references to CPOs in Supplementary Material .06 to Rule 723, which explains when Improvement Orders can be entered with respect to CPOs,[12] and in Rule 723(d), which notes that the agency side of an order entered into the Price Improvement Mechanism may execute against CPOs at the end of the exposure period.

4. Linkage Rules

The Exchange proposes to delete Supplementary Material .04 and .05 to Rule 803, which contains duplicative and obsolete provisions relevant to away market routing. In particular, the content of Supplementary Material .04 and .05 to Rule 803 is now contained in Supplementary Material .06 and .07 to Rule 1901[13] because linkage handling is performed by unaffiliated broker dealers (*i.e.,* Linkage Handlers) on the Exchange. Therefore as described above, the Exchange proposes to delete this language from Rule 803, which concerns the obligations of market makers.

5. Supplementary Material

The Exchange notes that certain supplementary material is mistakenly labelled as ''supplemental'' material in the Exchange's rulebook.[14] In order to achieve consistency with how other rules are labelled, the Exchange proposes to change these to instead refer to ''supplementary'' material. Finally, the Exchange proposes to make a non-substantive change to Supplementary Material to Rule 803, which concerns the obligations of market makers, by updating the word ''To'' to lower case.

2. Statutory Basis

The Exchange believes that the proposed rule change is consistent with the requirements of the Act and the rules and regulations thereunder that are applicable to a national securities exchange, and, in particular, with the requirements of Section 6(b) of the Act.[15] In particular, the proposal is consistent with Section 6(b)(5) of the Act[16] because it is designed to promote just and equitable principles of trade, to remove impediments to and perfect the mechanisms of a free and open market and a national market system and, in general, to protect investors and the public interest. The Exchange believes it is appropriate to make the proposed technical corrections to its rules so that Exchange members and investors have a clear and accurate understanding of the meaning of the ISE Gemini rules.

1. No Bid Options/Limit Price

The Exchange currently operates a pilot program to permit designated options classes to be quoted and traded in increments as low as one cent. The Exchange is proposing to amend Rule 713(b) to account for the fact that option classes selected for inclusion in the Penny Pilot are permitted to trade in penny increments. For penny classes that are quoted no bid, the Exchange will convert a market order to sell to a limit order with a price of one cent. In addition, the proposed rule change clarifies that Rule 713(b) applies to all series with a bid of $0.00, and not just those series that also have an offer of $0.05. The proposed rule change is necessary to account for options trading in multiple trading increments,

[5] *See* Rule 715(b)(4), Rule 804(b)(1) and Rule 805(a).

[6] *See* Rule 715(b)(4) and Rule 804(b)(1).

[7] The term ''Public Customer'' means a person or entity that is not a broker or dealer in securities. *See* Rule 100(a)(38).

[8] The PIM is a process by which an Electronic Access Member can provide price improvement opportunities for a transaction wherein the Electronic Access Member seeks to facilitate an order it represents as agent, and/or a transaction wherein the Electronic Access Member solicited interest to execute against an order it represents as agent (a ''Crossing Transaction''). *See* Rule 723(a).

[9] A Crossing Transaction is comprised of the order the Electronic Access Member represents as agent (the ''Agency Order'') and a counter-side order for the full size of the Agency Order (the ''Counter-Side Order''). The Counter-Side Order may represent interest for the Member's own account, or interest the Member has solicited from one or more other parties, or a combination of both. *See* Rule 723(b).

[10] *See* Rule 723(c)(1).

[11] *See* Rule 715(f).

[12] Although CPOs are no longer available, members will continue to be able to enter Improvement Orders for the account of Public Customers.

[13] *See* Securities Exchange Act Release No. 73808 (December 10, 2014), 79 FR 74797 (December 16, 2014) (SR–ISE–2014–54) (order approving the proposed changes to move Supplementary Material .04 and .05 to Rule 803 to Supplementary Material .06 and .07 to Rule 1901 in the ISE rulebook). Chapter 19 of the Exchange's rulebook incorporates Chapter 19 of the ISE rulebook by reference.

[14] *See* ''Supplemental'' Material to Rules 717 and 809. *See* also reference in Rule 721(a)(3) to ''Supplemental'' Material .01 to Rule 717.

[15] 15 U.S.C. 78f(b).

[16] 15 U.S.C. 78f(b)(5).

including under the Penny Pilot, and will ensure that market orders to sell are not inadvertently executed at a price of zero. The Exchange believes that these changes more accurately reflect the intent of Rule 713(b), as described above, and will eliminate investor confusion with respect to the operation of this rule by more accurately describing the functionality provided by the Exchange.

2. Non-Displayed Penny Orders and Quotes/Customer Participation Orders

As explained above, the Exchange does not offer non-displayed penny orders and quotes or customer participation orders, and thus proposes to remove obsolete definitions and other outdated references to these order types. The Exchange believes that these changes will eliminate investor confusion regarding order types available for trading on ISE Gemini to the benefit of members and investors.

3. Linkage Rules

The proposed changes to the linkage rules are non-substantive and intended to reduce investor confusion. As explained above, the Exchange is deleting duplicative and obsolete rule text from Chapter 8 of its rulebook because linkage handling is handled by Linkage Handlers. Therefore, the Exchange believes that these rules are more appropriately located in Chapter 19 of the Exchange's rulebook, which incorporates by reference Chapter 19 of the ISE rulebook.

4. Supplementary Material

The proposed change to label supplementary material correctly is non-substantive and is intended to achieve consistency in how these rules are labelled to the benefit of members and investors.

B. Self-Regulatory Organization's Statement on Burden on Competition

In accordance with Section 6(b)(8) of the Act,[17] the Exchange does not believe that the proposed rule change will impose any burden on intermarket or intramarket competition that is not necessary or appropriate in furtherance of the purposes of the Act. The proposed rule change makes technical, non-substantive amendments to the Exchange's rules in order to eliminate investor confusion, and is not designed to have any competitive impact.

[17] 15 U.S.C. 78f(b)(8).

C. Self-Regulatory Organization's Statement on Comments on the Proposed Rule Change Received From Members, Participants, or Others

No written comments were either solicited or received.

III. Date of Effectiveness of the Proposed Rule Change and Timing for Commission Action

Because the foregoing proposed rule change does not: (i) Significantly affect the protection of investors or the public interest; (ii) impose any significant burden on competition; and (iii) become operative for 30 days from the date on which it was filed, or such shorter time as the Commission may designate, it has become effective pursuant to Section 19(b)(3)(A)(iii) of the Act [18] and subparagraph (f)(6) of Rule 19b–4 thereunder.[19]

A proposed rule change filed under Rule 19b–4(f)(6) normally does not become operative prior to 30 days after the date of filing. However, Rule 19b–4(f)(6)(iii) [20] permits the Commission to designate a shorter time if such action is consistent with the protection of investors and the public interest. In its filing with the Commission, the Exchange requests that the Commission waive the 30-day operative delay. The Exchange asserts that waiver of the operative delay is consistent with the protection of investors and the public interest because the proposed rule change makes non-substantive, technical changes to the Exchange's rules. The Exchange also believes that the proposed rule change increases the clarity of ISE Gemini rules to the benefit of members and investors that trade on the Exchange. For these reasons, the Commission believes that waiver of the 30-day operative delay is consistent with the protection of investors and the public interest. Therefore, the Commission designates the proposed rule change to be operative upon filing.[21]

At any time within 60 days of the filing of the proposed rule change, the Commission summarily may temporarily suspend such rule change if it appears to the Commission that such action is necessary or appropriate in the public interest, for the protection of investors, or otherwise in furtherance of the purposes of the Act. If the Commission takes such action, the Commission shall institute proceedings to determine whether the proposed rule should be approved or disapproved.

[18] 15 U.S.C. 78s(b)(3)(A)(iii).

[19] 17 CFR 240.19b–4(f)(6). In addition, Rule 19b–4(f)(6) requires a self-regulatory organization to give the Commission written notice of its intent to file the proposed rule change at least five business days prior to the date of filing of the proposed rule change, or such shorter time as designated by the Commission. The Exchange has satisfied this requirement.

[20] 17 CFR 240.19b–4(f)(6)(iii).

[21] For purposes only of waiving the 30-day operative delay, the Commission also has considered the proposed rule's impact on efficiency, competition, and capital formation. *See* 15 U.S.C. 78c(f).

IV. Solicitation of Comments

Interested persons are invited to submit written data, views, and arguments concerning the foregoing, including whether the proposed rule change is consistent with the Act. Comments may be submitted by any of the following methods:

Electronic Comments

- Use the Commission's Internet comment form (*http://www.sec.gov/rules/sro.shtml*); or
- Send an email to *rule-comments@sec.gov.* Please include File Number SR–ISEGemini–2016–13 on the subject line.

Paper Comments

- Send paper comments in triplicate to Secretary, Securities and Exchange Commission, 100 F Street NE., Washington, DC 20549–1090.

All submissions should refer to File Number SR–ISEGemini–2016–13. This file number should be included on the subject line if email is used. To help the Commission process and review your comments more efficiently, please use only one method. The Commission will post all comments on the Commission's Internet Web site (*http://www.sec.gov/rules/sro.shtml*). Copies of the submission, all subsequent amendments, all written statements with respect to the proposed rule change that are filed with the Commission, and all written communications relating to the proposed rule change between the Commission and any person, other than those that may be withheld from the public in accordance with the provisions of 5 U.S.C. 552, will be available for Web site viewing and printing in the Commission's Public Reference Room, 100 F Street NE., Washington, DC 20549, on official business days between the hours of 10:00 a.m. and 3:00 p.m. Copies of the filing also will be available for inspection and copying at the principal office of the Exchange. All comments received will be posted without change; the Commission does not edit personal identifying information from submissions. You should submit only information that you wish to make available publicly. All submissions should refer to File Number SR–

ISEGemini–2016–13 and should be submitted on or before December 5, 2016.

For the Commission, by the Division of Trading and Markets, pursuant to delegated authority.[22]

Brent J. Fields,

Secretary.

[FR Doc. 2016–27237 Filed 11–10–16; 8:45 am]

BILLING CODE 8011–01–P

SECURITIES AND EXCHANGE COMMISSION

[Release No. 34–79252; File No. SR–DTC–2016–011]

Self-Regulatory Organizations; The Depository Trust Company; Notice of Filing and Immediate Effectiveness of a Proposed Rule Change To Allow DTC To Automate the Process for Participants To Submit Eligibility Requests for the DTC Custody Service

November 7, 2016.

Pursuant to Section 19(b)(1) of the Securities Exchange Act of 1934 (''Act'')[1] and Rule 19b–4,[2] notice is hereby given that on October 28, 2016, The Depository Trust Company (''DTC'') filed with the Securities and Exchange Commission (''Commission'') the proposed rule change as described in Items I, II and III below, which Items have been prepared by the clearing agency. DTC filed the proposed rule change pursuant to Section 19(b)(3)(A)[3] of the Act and Rule 19b–4(f)(4)[4] thereunder. The proposed rule change was effective upon filing with the Commission. The Commission is publishing this notice to solicit comments on the proposed rule change from interested persons.

I. Clearing Agency's Statement of the Terms of Substance of the Proposed Rule Change

The proposed rule change[5] would amend the DTC Custody Service Guide (''Custody Guide'')[6] to allow DTC to (i) enhance the process by which Participants submit requests to make Securities, and assets that are not Securities (''Non-Security Assets''), as applicable, eligible for deposit into the Custody Service (''Custody Eligibility Requests'') and (ii) add functionality for Participants to inquire as to whether a particular issue is eligible for the Custody Service. Upon its implementation, the proposed rule change would enhance efficiencies for Participants and DTC by providing a secure, centralized environment for the submission of Custody Eligibility Requests.

II. Clearing Agency's Statement of the Purpose of, and Statutory Basis for, the Proposed Rule Change

In its filing with the Commission, the clearing agency included statements concerning the purpose of and basis for the proposed rule change and discussed any comments it received on the proposed rule change. The text of these statements may be examined at the places specified in Item IV below. The clearing agency has prepared summaries, set forth in sections A, B, and C below, of the most significant aspects of such statements.

(A) Clearing Agency's Statement of the Purpose of, and Statutory Basis for, the Proposed Rule Change

1. Purpose

In order for DTC to accept a Security or a Non-Security Asset, as applicable, for deposit into the Custody Service, DTC requires that the Security or Non-Security Asset be made eligible for the Custody Service pursuant to a Custody Eligibility Request.[7] The proposed rule change would allow DTC to transfer the existing request method for Custody Eligibility Requests by which Participants submit requests via email, to an Internet-based application (''Application''), as more fully described below (''Enhanced Process'').[8] Upon implementation, the Enhanced Process would (i) promote a more secure environment by providing for the submission and processing of Custody Eligibility Requests through the Application,[9] and (ii) enhance efficiencies for DTC by reducing the manual processing of Custody Eligibility requests, as more fully described below.

Background

The Custody Service enables Participants that hold (i) Securities that (A) are not presently eligible for book-entry services at DTC and/or (B) would otherwise be eligible for DTC book-entry services but are not registered in the name of DTC's nominee, Cede & Co., and/or (ii) certain Non-Security Assets, to deposit those Securities and/or Non-Security Assets with DTC for safe-keeping, in accordance with requirements set forth in the Custody Guide.[10] Securities and Non-Security Assets deposited through the Custody Service are maintained in DTC's secure vault in a Participant's name or a Participant's customer's name (*i.e.,* they are not transferred into DTC's nominee name, Cede & Co).[11] In addition, once a Security is deposited into the Custody Service, DTC may perform limited depository services relating to the Security including physical processing for the Security on a Participant's behalf, such as facilitating the transfer of Security Certificates, and providing services available through the Custody Reorganization Service.[12]

The proposed rule change would amend the Custody Guide to allow DTC to implement the Enhanced Process by moving the processing of Custody Eligibility Requests to the Application and replacing certain manual processes, as more fully described below.

Existing Process

In order for an issue to be made eligible for deposit to the Custody Service, a Participant must submit a Custody Eligibility Request to DTC. The Custody Eligibility Request is submitted by email and must include certain data elements (''Data Elements'')[13] and a

[22] 17 CFR 200.30–3(a)(12).

[1] 15 U.S.C. 78s(b)(1).

[2] 17 CFR 240.19b–4.

[3] 15 U.S.C. 78s(b)(3)(A).

[4] 17 CFR 240.19b–4(f)(4).

[5] Capitalized terms not otherwise defined herein have the respective meanings set forth in the DTC Rules, By-laws and Organization Certificate (''Rules''), *available at http://www.dtcc.com/legal/rules-and-procedures.aspx.*

[6] *Available at http://www.dtcc.com/~/media/Files/Downloads/legal/service-guides/Custody.pdf.*

[7] Once the Security or Non-Security Asset subject of the Custody Eligibility Request is made eligible by DTC for deposit into the Custody Service, additional deposits of that Security or Non-Security Asset by the requesting Participant or other Participants may be made without requiring submission of another Custody Eligibility Request.

[8] The Custody Guide provides that Custody Service functions may become accessible via web-based services as announced by DTC via Important Notice from time to time. *See* Custody Guide, *supra* note 6 at 4. DTC would announce the proposed rule change via Important Notice.

[9] The Application has been designed to provide a secure, centralized online system managed by DTC, whereas Participant security protocols for the transmission of emails may vary.

[10] *See* Custody Guide for the types of Securities and Non-Security Assets eligible for deposit to the Custody Service (''Custody Eligible Security Types''), *supra* note 6, at 5,12.

[11] Cede & Co. is the holder of record of Securities eligible for DTC's book-entry services.

[12] *See* Custody Guide, *supra* note 6, 14–17 (providing Procedures for the Custody Reorganization Service). The limited depository services provided by DTC as described above relate only to securities processing functions and do not apply to Non-Security Assets.

[13] Data Elements include DTC Participant Number (to identify the Participant making the Custody Eligibility Request), CUSIP (if available); Sub-Issue Type (required); description of the Security or Non-Security Asset (''Security Description'') (required); U.S/Non U.S. (This field is required for corporate debt and equity issues. All certificates of deposit and collateralized mortgage obligations must be U.S. issues. For municipal securities, this field is set to U.S. and is not updateable); Issuer Country of Origin (required for

Continued

copy of the Security Certificate to be deposited or, if the asset to be deposited is a Non-Security Asset, other asset-related documentation evidencing the asset to be deposited. Upon receipt of a Custody Eligibility Request, DTC reviews the Data Elements and the Security Certificate or other asset-related documentation, as applicable, to determine whether the Security or Non-Security Asset is a Custody Eligible Security Type.[14] If the Security or Non-Security, as applicable, is a Custody Eligible Security Type and otherwise complies with DTC's Rules on eligibility,[15] DTC will make it eligible for Custody services by adding it to the DTC Custody security master file (''Custody Master File''). For those eligible Securities or Non-Security Assets without an assigned CUSIP, DTC establishes the CUSIP for the Security, or other Non-Security Asset, as applicable, in DTC's system. The validation, CUSIP assignment and communication with the Participant are all manually processed by DTC. Once a Security or Non-Security Asset is made eligible for deposit into the Custody Service, the Participant may deliver the physical Security Certificate or other asset-related documentation, as applicable, either by hand, or via overnight mail, for deposit into DTC's secure vault.[16]

Enhanced Process

Pursuant to the proposed rule change, Custody Eligibility Requests would be submitted by Participants to DTC using the Enhanced Process through the Application. DTC would eliminate the ability to submit Custody Eligibility Requests by email. Participants would continue to provide the same information through the Application that they currently provide through email, including the Data Elements and a copy of the Security Certificate or other asset-related documentation they are seeking to make eligible.[17] In addition, the Application would offer Participants seeking to make multiple Custody Eligibility Requests the option to submit a spreadsheet containing the Data Elements for all the Securities and Non-Security Assets for which eligibility is being requested as one submission.[18]

Once the Custody Eligibility Request is submitted, DTC would validate the Data Elements to determine whether the Security or Non-Security Asset, as applicable, is a Custody Eligible Security Type, as DTC does today. DTC would send an automated email to notify the Participant if a Custody Eligibility Request requires further review by DTC prior to adding the Security or Non-Security Asset, as applicable, to the Custody system as eligible for deposit. DTC may require other information it deems necessary to complete its processing of a Custody Eligibility Request. If DTC requires additional information to complete its review of a Custody Eligibility Request, or otherwise identifies an issue that may affect processing of the Custody Eligibility Request (*e.g.,* incorrect Sub-Issue type, an issue regarding compliance with sanctions administered and enforced by the Office of Foreign Assets Control of the U.S. Department of the Treasury (''OFAC''), the listing of a Security on the issuer list maintained by OFAC,[19] etc.), DTC staff would contact the Participant in this regard directly by phone and/or in writing.[20]

If a Security or Non-Security Asset subject of the Custody Eligibility Request is eligible for deposit in the Custody Service but has not been assigned a CUSIP prior to submission of the Custody Eligibility Request to the Application, DTC would assign a CUSIP as it does today.[21] DTC would then notify the Participant through an automated email message that the Security or Non-Security Asset is eligible for the Custody Service, and add the Security or Non-Security Asset to the Custody Master File. The Participant may then deliver the physical Security Certificate or, for a Non-Security Asset, other asset-related documentation, as applicable, to DTC for deposit into DTC's secure vault in the same manner that it would today.

Implementation of the Enhanced Process would provide enhanced efficiency and a more secure system for submission and review of Custody Eligibility Requests to Participants and DTC in relation to the current email-based method. First, as described above, the Application would enhance security in transmission of Custody Eligibility Requests by using a secure online system instead of the current email method. Second, use of the Application for this purpose would enhance transparency for Participants with respect to the status of their individual Custody Eligibility Requests.[22] Third, the migration of the submission of Custody Eligibility Requests from an email-based method to using the Application would enhance processing efficiencies at DTC by providing an automated and centralized means for DTC to receive and manage Eligibility Request Documents.

Eligibility Inquiry Capability

The Application would also offer a new inquiry capability (''Custody Eligibility Inquiry Function'') for Participants' use that would allow them to directly view whether a Security or Non-Security Asset is already eligible for deposit into the Custody Service. The Participant would make the inquiry by entering certain search criteria (''Search Criteria''). The Custody Eligibility Inquiry Function, in addition to providing Participants the ability to search by CUSIP and Security Description or Non-Security Asset, would also provide the capability to use other Search Criteria to narrow the search.[23] If the applicable Security or Non-Security Asset is eligible for the Custody Service, the Participant would know that it can proceed with its deposit without first requesting eligibility. This feature would provide a Participant that needs to verify eligibility of a Security or Non-Security Asset before depositing it a real-time view into whether the Security is already on the Custody Master File

corporate debt and equity issue types); State of Incorporation (required for all U.S. issues); Dated Date (required for corporate debt and municipal security types); Accrual Date (required for corporate debt and municipal security types); Certificate Type (required and defaulted to R for Registered, can be updated to Bearer or Interchangeable, as applicable); Maturity Date (required for corporate debt, municipal securities and warrants); Interest Rate (required for corporate debt and municipal security types); Name of Paying Agent (required for corporate debt and municipal security types); and Exercise Price (required for warrants).

[14] *See* Custody Guide, *supra* note 10.

[15] *See* Rule 5, *supra* note 5.

[16] *See* Custody Guide, *supra* note 6 at 10–14 (setting forth Procedures for the deposit of Securities and Non-Security Assets to the Custody Service).

[17] If the request does not contain the required Data Elements, and the Security Certificate or other asset-related documentation, as applicable, then the Application would prompt the Participant to resubmit the inquiry with all required Data Elements, and the Security Certificate or other asset-related documentation, as applicable. Today, the Participant is notified in this regard only after DTC has reviewed the email request.

[18] Currently, each Custody Eligibility Request must be submitted individually. This feature would assist Participants performing large conversions, including those moving Custody functions from their own facility to DTC's Custody Service.

[19] *See* Rule 2, Section 8, and Rule 5, Section 1, *supra* note 5.

[20] The Custody Guide would state that Participants with questions regarding this process should call the DTC Underwriting Hotline phone number.

[21] CUSIPS [sic] assigned by DTC would be viewable on the Application screen.

[22] The Application would provide Participants with the ability to view the status of their Custody Eligibility Requests online.

[23] The Search Criteria include CUSIP or partial CUSIP (at least 6 characters), and Security Description (at least 3 characters). Additional Search Criteria would allow the Participant to narrow the results including the Security Interest Rate range, Maturity Date range, Dated Date range and Sub-Issue Type.

without having to inquire with DTC by phone or email.

Proposed Rule Changes

The Custody Guide does not currently contain a section describing Custody Eligibility Requests and the process for submitting them. Pursuant to the proposed rule change, DTC would amend the text of the Custody Guide to add a section in this regard, and:

(i) Provide the Procedures for the Enhanced Process as described above;

(ii) provide that (a) if a Participant seeking to make a Security or other asset eligible for the Custody Service does not know whether the Security or asset is currently eligible for deposit in DTC's Custody Service, the Participant should verify the eligibility status using the online Custody Eligibility Inquiry Function through the Application, as defined below and (b) if the Security or asset is not eligible then the Participant must, prior to depositing it at DTC, submit a request to DTC to make the Security or asset eligible for the Custody Service using the Custody Eligibility Application. [sic]

(iii) provide the Procedures for the Custody Eligibility Inquiry Function as described above; and

(iv) state that Participants must have access to DTC's online web-based portal (''Portal'') and the Application in order to submit Custody Eligibility Requests and make Custody Eligibility Inquiries.[24]

Implementation

The proposed rule change would be implemented in phases whereby Participants using the Custody Service would be migrated to use the Application to submit Custody Eligibility Requests over a period of approximately two months beginning on October 31, 2016 (''Effective Date''). Migration to the Application for all Participants that use the Custody Service would be expected to be completed by the end of December 2016. However, email submission of Custody Eligibility Requests would remain available to Participants as a valid method to submit Custody Eligibility Requests until the later of (i) January 31, 2017 and (ii) 30 calendar days following the date all Participants using the Custody Service have migrated to be able to submit Custody Eligibility Requests using the Custody Eligibility Application (''Final Effective Date'').[25] On and after the Final Effective Date, DTC would not accept such email requests and Custody Eligibility Requests would be required to be submitted through the Custody Eligibility Application only. The Custody Guide text as proposed would contain a footnote reflecting the above regarding the Final Effective Date and state that the footnote would be deleted as of the Final Effective Date.

2. Statutory Basis

Section 17A(b)(3)(F) of the Act[26] requires that the rules of the clearing agency be designed, *inter alia,* in general, to protect investors and the public interest. DTC believes the proposed rule change is consistent with this provision because (i) having Custody Eligibility Requests submitted through the Application would promote efficient and secure delivery and processing of such requests in order to facilitate making Securities and Non-Security Assets, as applicable, eligible for deposit into the Custody Service by Participants on behalf of themselves and their customers, and (ii) the proposed online functionality would facilitate enhanced transparency for Participants in their use of the Custody Service on behalf of themselves and their customers. Thus, by (i) facilitating efficient and secure submission of Custody Eligibility Requests, which in turn would facilitate the ability of Participants to deposit customer assets in DTC's secure vault, and (ii) providing for enhanced transparency to Participants in this regard, the proposed rule change would protect investors and the public interest.

Rule 17Ad–22(d)(6) promulgated under the Act[27] requires that each registered clearing agency shall establish, implement, maintain and enforce written policies and procedures reasonably designed to, as applicable, be cost-effective in meeting the requirements of participants while maintaining safe and secure operations. DTC believes that the proposed rule change is consistent with Rule 17Ad–22(d)(6) because (i) by enhancing the efficiency of the processing of Custody Eligibility Requests without increasing costs to Participants to access the service,[28] the proposed rule change would be cost-effective in meeting requirements of Participants, and (ii) by processing Custody Eligibility Requests through the Application, a centralized and secure online application, DTC would maintain safe and secure operations with respect to transmission and processing of such requests.

(B) Clearing Agency's Statement on Burden on Competition

DTC does not believe that the proposed rule change would have any adverse impact, or impose any burden, on competition because DTC would not charge a fee for access to the Application and therefore the proposal would not impose additional costs on Participants in this regard. In addition, the process for Participants to register for the Application is identical to that used by Participants to register for DTC web-based services generally.[29] DTC has discussed the proposal with Participants using the Custody Service and is conducting user testing on the Application prior to implementation on a Participant-by-Participant basis.

(C) Clearing Agency's Statement on Comments on the Proposed Rule Change Received from Members, Participants, or Others

DTC has not solicited and does not intend to solicit, comments regarding the proposed rule change. DTC has not received any unsolicited written comments from interested parties. To the extent DTC receives written comments on the proposed rule change, DTC will forward such comments to the Commission. DTC has conducted industry outreach with respect to the proposal including discussions with the Securities Processing Advisory Board (SPAB), whose members account for over 70 percent of the overall Custody Service activity at DTC.

III. Date of Effectiveness of the Proposed Rule Change and Timing for Commission Action

The foregoing rule change has become effective pursuant to Section 19(b)(3)(A)[30] of the Act and paragraph (f) of Rule 19b–4[31] thereunder. At any time within 60 days of the filing of the proposed rule change, the Commission summarily may temporarily suspend such rule change if it appears to the Commission that such action is necessary or appropriate in the public interest, for the protection of investors,

[24] The Custody Guide would provide that Participants that require assistance in accessing the Portal and/or Application should contact their DTC Relationship Manager.

[25] The Final Effective Date would be announced via a DTC Important Notice.

[26] 15 U.S.C. 78q–1(b)(3)(F).

[27] 17 CFR 240.17Ad–22(d)(6).

[28] DTC would not charge Participants a fee for access to the Application.

[29] Participants using DTC web-based services, such as the Application, make use of super access coordinators who are persons at the Participant firm authorized to grant other individuals at the Participant firm to access DTC web-based services on behalf of the Participant. All Participants using the Custody Service currently have appointed super access coordinators.

[30] 15 U.S.C. 78s(b)(3)(A).

[31] 17 CFR 240.19b–4(f).

or otherwise in furtherance of the purposes of the Act.

IV. Solicitation of Comments

Interested persons are invited to submit written data, views, and arguments concerning the foregoing, including whether the proposed rule change is consistent with the Act. Comments may be submitted by any of the following methods:

Electronic Comments

- Use the Commission's Internet comment form (*http://www.sec.gov/rules/sro.shtml*); or
- Send an email to *rule-comments@sec.gov.* Please include File Number SR–DTC–2016–011 on the subject line.

Paper Comments

- Send paper comments in triplicate to Secretary, Securities and Exchange Commission, 100 F Street NE., Washington, DC 20549.

All submissions should refer to File Number SR–DTC–2016–011. This file number should be included on the subject line if email is used. To help the Commission process and review your comments more efficiently, please use only one method. The Commission will post all comments on the Commission's Internet Web site (*http://www.sec.gov/rules/sro.shtml*). Copies of the submission, all subsequent amendments, all written statements with respect to the proposed rule change that are filed with the Commission, and all written communications relating to the proposed rule change between the Commission and any person, other than those that may be withheld from the public in accordance with the provisions of 5 U.S.C. 552, will be available for Web site viewing and printing in the Commission's Public Reference Room, 100 F Street NE., Washington, DC 20549 on official business days between the hours of 10:00 a.m. and 3:00 p.m. Copies of the filing also will be available for inspection and copying at the principal office of DTC and on DTCC's Web site (*http://dtcc.com/legal/sec-rule-filings.aspx*). All comments received will be posted without change; the Commission does not edit personal identifying information from submissions. You should submit only information that you wish to make available publicly. All submissions should refer to File Number SR–DTC–2016–011 and should be submitted on or before December 5, 2016.

For the Commission, by the Division of Trading and Markets, pursuant to delegated authority.[32]

Brent J. Fields,

Secretary.

[FR Doc. 2016–27236 Filed 11–10–16; 8:45 am]

BILLING CODE 8011–01–P

[32] 17 CFR 200.30–3(a)(12).

SECURITIES AND EXCHANGE COMMISSION

[Release No. 34–79257; File No. 265–29]

Equity Market Structure Advisory Committee

AGENCY: Securities and Exchange Commission.

ACTION: Notice of meeting.

SUMMARY: The Securities and Exchange Commission Equity Market Structure Advisory Committee is providing notice that it will hold a public meeting on Tuesday, November 29, 2016, in Multi-Purpose Room LL–006 at the Commission's headquarters, 100 F Street NE., Washington, DC. The meeting will begin at 9:30 a.m. (EST) and will be open to the public. The public portions of the meeting will be webcast on the Commission's Web site at *www.sec.gov.* Persons needing special accommodations to take part because of a disability should notify the contact person listed below. The public is invited to submit written statements to the Committee. The meeting will focus on recommendations and updates from the four subcommittees.

DATES: The public meeting will be held on Tuesday, November 29, 2016. Written statements should be received on or before November 23, 2016.

ADDRESSES: The meeting will be held at the Commission's headquarters, 100 F Street NE., Washington, DC. Written statements may be submitted by any of the following methods:

Electronic Statements

- Use the Commission's Internet submission form (*http://www.sec.gov/rules/other.shtml*); or
- Send an email message to *rule-comments@sec.gov.* Please include File Number 265–29 on the subject line; or

Paper Statements

- Send paper statements in triplicate to Brent J. Fields, Federal Advisory Committee Management Officer, Securities and Exchange Commission, 100 F Street NE., Washington, DC 20549–1090.

All submissions should refer to File No. 265–29. This file number should be included on the subject line if email is used. To help us process and review your statement more efficiently, please use only one method. The Commission will post all statements on the Commission's Internet Web site at SEC Web site at (*http://www.sec.gov/comments/265-29/265-29.shtml*).

Statements also will be available for Web site viewing and printing in the Commission's Public Reference Room, 100 F Street NE., Room 1580, Washington, DC 20549, on official business days between the hours of 10:00 a.m. and 3:00 p.m. All statements received will be posted without change; we do not edit personal identifying information from submissions. You should submit only information that you wish to make available publicly.

FOR FURTHER INFORMATION CONTACT: Arisa Tinaves Kettig, Senior Special Counsel, at (202) 551–5676, Division of Trading and Markets, Securities and Exchange Commission, 100 F Street NE., Washington, DC 20549–7010.

SUPPLEMENTARY INFORMATION: In accordance with Section 10(a) of the Federal Advisory Committee Act, 5 U.S.C.–App. 1, and the regulations thereunder, Stephen Luparello, Designated Federal Officer of the Committee, has ordered publication of this notice.

Dated: November 8, 2016.

Brent J. Fields,

Committee Management Officer.

[FR Doc. 2016–27265 Filed 11–10–16; 8:45 am]

BILLING CODE 8011–01–P

SECURITIES AND EXCHANGE COMMISSION

[Release No. 34–79249; File No. SR–Phlx–2016–86]

Self-Regulatory Organizations; NASDAQ PHLX LLC; Order Granting Approval of Proposed Rule Change To Delete or Amend Rule Language Relating to Specialists and Registered Options Traders

November 7, 2016.

I. Introduction

On August 12, 2016, NASDAQ PHLX LLC (''Exchange'' or ''Phlx'') filed with the Securities and Exchange Commission (''SEC'' or ''Commission''), pursuant to Section 19(b)(1) of the Securities Exchange Act of 1934 (''Act'')[1] and Rule 19b–4 thereunder,[2] a proposed rule change to delete or amend its rules relating to specialists and Registered Options Traders

[1] 15 U.S.C. 78s(b)(1).

[2] 17 CFR 240.19b–4.

(''ROTs''). The proposed rule change was published for comment in the **Federal Register** on August 31, 2016.[3] On October 12, 2016, pursuant to Section 19(b)(2) of the Act,[4] the Commission designated a longer period within which to approve the proposed rule change, disapprove the proposed rule change, or institute proceedings to determine whether to disapprove the proposed rule change.[5] The Commission received no comment letters on the proposed rule change. This order approves the proposed rule change.

II. Description of the Proposal

Phlx Rules 1022(b) and (c) currently require each specialist[6] or ROT[7] to provide to the Exchange reports of options and orders in a manner prescribed by the Exchange. Phlx Rule 1022(b) requires each specialist or ROT to report opening positions and each purchase and sale in each option in which the specialist or ROT is registered for each account reported pursuant to Phlx Rule 1022.[8] Phlx Rule 1022(c) requires each specialist or ROT to report every order entered by the specialist or ROT for the purchase or sale of a security underlying any stock or Exchange-Traded Fund Share options contract traded on the Exchange or a security convertible into or exchangeable for such underlying security, as well as opening and closing positions in all such securities held in each account reported pursuant to Phlx Rule 1022.[9] The Exchange proposes to delete Phlx Rules 1022(b) and (c). The Exchange represents that the submission of these reports by specialists and ROTs is no longer necessary because most of the information in the reports is available to the Exchange from other sources.[10]

Phlx Rule 1036(a) currently requires every limited partner, approved person, and every party who is affiliated with a specialist member organization to agree, in a stipulation approved by the Exchange, not to violate any Exchange rule or cause a specialist or a specialist member organization to violate these or any other rules relating to specialists. The Exchange proposes to delete Phlx Rule 1036(a). The Exchange represents that the violation of a stipulation would have provided the Exchange with a separate basis for proceeding against the provider of the stipulation in the event of an Exchange rule violation.[11] The Exchange believes that the stipulations are no longer necessary for that purpose and that the burden of collecting stipulations outweighs any benefits from the rule.[12]

Phlx Rule 1036(b) provides that no issuer, or parent or subsidiary thereof, or any officer, director or 10% stockholder thereof, may become an approved person in a specialist member organization whose members are registered in a security of that issuer. The Exchange proposes to amend Phlx Rule 1036(b) to refer to members who are registered in options overlying a security of that issuer to specify that Phlx Rule 1036(b) applies only to *options* trading on the Exchange.[13]

Phlx Rule 1037 provides that a specialist is liable for any loss sustained for orders entrusted to him which should have been executed, and for which he should have sent an execution report, when the specialist was made aware of the error by 9:30 on the business day following the submission of the order. The Exchange proposes to delete Phlx Rule 1037. The Exchange represents that today, specialists on the Exchange trade only for their own account and no longer handle orders for other market participants in their capacity as specialists; therefore, specialists would no longer be in a position to miss orders as contemplated by Rule 1037.[14]

III. Discussion and Commission Findings

After careful review, the Commission finds that the proposed rule change is consistent with the requirements of the Act and rules and regulations thereunder applicable to a national securities exchange.[15] In particular, the Commission finds that the proposed rule change is consistent with Section 6(b)(5) of the Act,[16] which requires, among other things, that the rules of a national securities exchange be designed to promote just and equitable principles of trade, to remove impediments to and perfect the mechanism of a free and open market and a national market system, and, in general, to protect investors and the public interest; and are not designed to permit unfair discrimination between customers, issuers, brokers, or dealers.

The Commission notes that the deletion of Phlx Rules 1022(b), 1022(c), and 1036(a) should eliminate burdens on Phlx members that the Exchange believes are no longer necessary to carry out its oversight of its members. In addition, the Commission notes that the Exchange's proposal to delete Phlx Rules 1022(b), 1022(c), 1036(a), and 1037 should benefit investors by helping to ensure that the Phlx rules correctly describe the current operations of the Exchange and obligations of its members. Finally, the Commission believes that amending Phlx Rule 1036(b) to specify that Phlx Rule 1036(b) applies only to *options* trading on the Exchange should add clarity to Phlx's rules.

Accordingly, for the reasons discussed above, the Commission finds that the proposed rule change is consistent with Section 6(b)(5) of the Act.

V. Conclusion

It is therefore ordered pursuant to Section 19(b)(2) of the Act[17] that the proposed rule change (SR–PHLX–2016–86) be and hereby is approved.

[3] *See* Securities Exchange Act Release No. 78680 (August 25, 2016), 81 FR 60110 (August 31, 2016) (''Notice'').

[4] 15 U.S.C. 78s(b)(2).

[5] *See* Securities Exchange Act Release No. 79087, 81 FR 71776 (October 18, 2016). The Commission designated a longer period within which to take action on the proposed rule change and designated November 29, 2016, as the date by which it should approve, disapprove, or institute proceedings to determine whether to disapprove the proposed rule change.

[6] A ''specialist'' is an Exchange member who is registered as an options specialist pursuant to Phlx Rule 1020(a). Specialists are subject to quoting and registration obligations set forth in Phlx Rules 1014(b), 1020 and 1080.02.

[7] A ''ROT'' is defined in Phlx Rule 1014(b) as a regular member or a foreign currency options participant of the Exchange located on the trading floor who has received permission from the Exchange to trade in options for his own account. For the purposes of Phlx Rule 1014, the term ''ROT'' includes Streaming Quote Traders and Remote Streaming Quote Traders.

[8] *See* Notice, *supra* note 3, at 60110. The report is required to designate the time and type of tick at which such transaction was effected.

[9] *See id.* The report pertaining to orders must include the terms of each order, identification of the brokerage firms through which the orders were entered, the times of entry or cancellation, the times reports of executions were received and, if all or part of the order was executed, the quantity and execution price.

[10] *See id.* The Exchange represents that the information referred to in Phlx Rule 1022(b) is available from the Options Clearing Corporation and that much of the information referred to in Phlx Rule 1022(c) is available in the Intermarket Surveillance Group Equity Audit Trail.

[11] *See id.*

[12] *See id.*

[13] The Exchange is also correcting the rule by changing the word ''who'' to ''whose.''

[14] *See* Notice, *supra* note 3, at 60111.

[15] In approving the proposed rule changes, the Commission has considered their impact on efficiency, competition, and capital formation. *See* 15 U.S.C. 78c(f).

[16] 15 U.S.C. 78f(b)(5).

[17] 15 U.S.C. 78s(b)(2).

[18] 17 CFR 200.30–3(a)(12).

For the Commission, by the Division of Trading and Markets, pursuant to delegated authority.[18]

Brent J. Fields,

Secretary.

[FR Doc. 2016–27234 Filed 11–10–16; 8:45 am]

BILLING CODE 8011–01–P

SECURITIES AND EXCHANGE COMMISSION

[Investment Company Act Release No. 32353; File No. 812–14654]

The Boston Trust & Walden Funds, et al.; Notice of Application

November 7, 2016.

AGENCY: Securities and Exchange Commission (''Commission'').

ACTION: Notice of an application for an order pursuant to: (a) Section 6(c) of the Investment Company Act of 1940 (''Act'') granting an exemption from sections 18(f) and 21(b) of the Act; (b) section 12(d)(1)(J) of the Act granting an exemption from section 12(d)(1) of the Act; (c) sections 6(c) and 17(b) of the Act granting an exemption from sections 17(a)(1), 17(a)(2) and 17(a)(3) of the Act; and (d) section 17(d) of the Act and rule 17d–1 under the Act to permit certain joint arrangements and transactions. Applicants request an order that would permit certain registered open-end management investment companies to participate in a joint lending and borrowing facility.

APPLICANTS: The Boston Trust & Walden Funds, registered under the Act as an open-end management investment company with one or more series, and Boston Trust Investment Management, Inc. (the ''Adviser''), registered as an investment adviser under the Investment Advisers Act of 1940.

FILING DATES: The application was filed on June 3, 2016, and amended on August 18, 2016 and October 18, 2016.

HEARING OR NOTIFICATION OF HEARING: An order granting the requested relief will be issued unless the Commission orders a hearing. Interested persons may request a hearing by writing to the Commission's Secretary and serving applicants with a copy of the request, personally or by mail. Hearing requests should be received by the Commission by 5:30 p.m. on December 1, 2016 and should be accompanied by proof of service on the applicants, in the form of an affidavit, or, for lawyers, a certificate of service. Pursuant to Rule 0–5 under the Act, hearing requests should state the nature of the writer's interest, any facts bearing upon the desirability of a hearing on the matter, the reason for the request, and the issues contested. Persons who wish to be notified of a hearing may request notification by writing to the Commission's Secretary.

ADDRESSES: Secretary, U.S. Securities and Exchange Commission, 100 F Street NE., Washington, DC 20549–1090; Applicants, c/o Michael V. Wible, Esq., Thompson Hine LLP, 41 South High Street, Suite 1700, Columbus, OH 43215.

FOR FURTHER INFORMATION CONTACT: Jennifer Palmer, Senior Counsel, at (202) 551–5786 or Nadya Roytblat, Assistant Chief Counsel, at (202) 551–6823 (Division of Investment Management, Chief Counsel's Office).

SUPPLEMENTARY INFORMATION: The following is a summary of the application. The complete application may be obtained via the Commission's Web site by searching for the file number, or an applicant using the Company name box, at *http://www.sec.gov/search/search.htm* or by calling (202) 551–8090.

Summary of the Application

1. Applicants request an order that would permit the applicants to participate in an interfund lending facility where each Fund could lend money directly to and borrow money directly from other Funds to cover unanticipated cash shortfalls, such as unanticipated redemptions or trade fails.[1] The Funds will borrow under the facility only to satisfy their short-term cash needs, and the loans' duration will be no more than 7 days.[2]

2. Applicants anticipate that the proposed facility would provide a borrowing Fund with a source of liquidity at a rate lower than the bank borrowing rate at times when the cash position of the Fund is insufficient to meet temporary cash requirements. In addition, Funds making short-term cash loans directly to other Funds would earn interest at a rate higher than they otherwise could obtain from investing their cash in repurchase agreements or certain other short-term money market instruments. Thus, applicants assert that the facility would benefit both borrowing and lending Funds.

3. Applicants agree that any order granting the requested relief will be subject to the terms and conditions stated in the application. Among others, the Adviser, through a designated committee, would administer the facility as a disinterested fiduciary as part of its duties under the investment management agreements with the Funds and would receive no additional fee as compensation for its services in connection with the administration of the facility, except that the Adviser could collect standard fees for transaction-related services. The facility would be subject to oversight and certain approvals by the Funds' Board, including, among others, approval of the interest rate formula and of the method for allocating loans across Funds, as well as review of the process in place to evaluate the liquidity implications for the Funds. A Fund's aggregate outstanding interfund loans will not exceed 15% of its net assets, and the Fund's loans to any one Fund will not exceed 5% of the lending Fund's net assets.[3]

4. Applicants assert that the facility does not raise the concerns underlying section 12(d)(1) of the Act given that the Funds are part of the same group of investment companies and there will be no duplicative costs or fees to the Funds.[4] Applicants also assert that the proposed transactions do not raise the concerns underlying sections 17(a)(1), 17(a)(3), 17(d) and 21(b) of the Act as the Funds would not engage in lending transactions that unfairly benefit insiders or are detrimental to the Funds. Applicants state that the facility will offer both reduced borrowing costs and enhanced returns on loaned funds to all participating Funds and each Fund would have an equal opportunity to borrow and lend on equal terms based on an interest rate formula that is objective and verifiable. With respect to the relief from section 17(a)(2) of the Act, applicants note that any collateral pledged to secure an interfund loan would be subject to the same conditions imposed by any other lender to a Fund that imposes conditions on the quality of or access to collateral for a borrowing (if the lender is another Fund) or the

[1] Applicants request that the order apply to the applicants and to any existing or future registered open-end management investment company or series thereof for which the Adviser or any successor thereto or an investment adviser controlling, controlled by, or under common control with the Adviser or any successor thereto serves as investment adviser (each a ''Fund'' and collectively the ''Funds'' and each such investment adviser an ''Adviser''). For purposes of the requested order, ''successor'' is limited to any entity that results from a reorganization into another jurisdiction or a change in the type of a business organization.

[2] Any Fund, however, will be able to call a loan on one business day's notice.

[3] Under certain circumstances, a borrowing Fund will be required to pledge collateral to secure the loan.

[4] Applicants state that the obligation to repay an interfund loan could be deemed to constitute a security for the purposes of sections 17(a)(1) and 12(d)(1) of the Act.

same or better conditions (in any other circumstance).[5]

5. Applicants also believe that the limited relief from section 18(f)(1) of the Act that is necessary to implement the facility (because the lending Funds are not banks) is appropriate in light of the conditions and safeguards described in the application and because the Funds would remain subject to the requirement of section 18(f)(1) that all borrowings of a Fund, including combined interfund loans and bank borrowings, have at least 300% asset coverage.

6. Section 6(c) of the Act permits the Commission to exempt any persons or transactions from any provision of the Act if such exemption is necessary or appropriate in the public interest and consistent with the protection of investors and the purposes fairly intended by the policy and provisions of the Act. Section 12(d)(1)(J) of the Act provides that the Commission may exempt any person, security, or transaction, or any class or classes of persons, securities, or transactions, from any provision of section 12(d)(1) if the exemption is consistent with the public interest and the protection of investors. Section 17(b) of the Act authorizes the Commission to grant an order permitting a transaction otherwise prohibited by section 17(a) if it finds that (a) the terms of the proposed transaction are fair and reasonable and do not involve overreaching on the part of any person concerned; (b) the proposed transaction is consistent with the policies of each registered investment company involved; and (c) the proposed transaction is consistent with the general purposes of the Act. Rule 17d–1(b) under the Act provides that in passing upon an application filed under the rule, the Commission will consider whether the participation of the registered investment company in a joint enterprise, joint arrangement or profit sharing plan on the basis proposed is consistent with the provisions, policies and purposes of the Act and the extent to which such participation is on a basis different from or less advantageous than that of the other participants.

For the Commission, by the Division of Investment Management, under delegated authority.

Brent J. Fields,

Secretary.

[FR Doc. 2016–27249 Filed 11–10–16; 8:45 am]

BILLING CODE 8011–01–P

[5] Applicants state that any pledge of securities to secure an interfund loan could constitute a purchase of securities for purposes of section 17(a)(2) of the Act.

SECURITIES AND EXCHANGE COMMISSION

Proposed Collection; Comment Request

Upon Written Request, Copies Available From: Securities and Exchange Commission, Office of FOIA Services, 100 F Street NE., Washington, DC 20549–2736.

Extension: Rule 201 and Rule 200(g) of Regulation SHO

SEC File No. 270–606, OMB Control No. 3235–0670

Notice is hereby given that pursuant to the Paperwork Reduction Act of 1995 (44 U.S.C. 3501 *et seq.*) (''PRA''), the Securities and Exchange Commission (''Commission'') is soliciting comments on the existing collection of information provided for in Rule 201 (17 CFR 242.201) and Rule 200(g) (17 CFR 242.200(g)) under the Securities Exchange Act of 1934 (15 U.S.C. 78a *et seq.*). The Commission plans to submit this existing collection of information to the Office of Management and Budget (''OMB'') for extension and approval.

Rule 201 is a short sale-related circuit breaker rule that, if triggered, imposes a restriction on the prices at which securities may be sold short. Rule 200(g) provides that a broker-dealer may mark certain qualifying sell orders ''short exempt.'' The information collected under Rule 201's written policies and procedures requirement applicable to trading centers, the written policies and procedures requirement of the broker-dealer provision of Rule 201(c), the written policies and procedures requirement of the riskless principal provision of Rule 201(d)(6), and the ''short exempt'' marking requirement of Rule 200(g) enable the Commission and self-regulatory organizations (''SROs'') to examine and monitor for compliance with the requirements of Rule 201 and Rule 200(g).

In addition, the information collected under Rule 201's written policies and procedures requirement applicable to trading centers helps to ensure that trading centers do not execute or display any impermissibly priced short sale orders, unless an order is marked ''short exempt,'' in accordance with the rule's requirements. Similarly, the information collected under the written policies and procedures requirement of the broker-dealer provision of Rule 201(c) and the riskless principal provision of Rule 201(d)(6) helps to ensure that broker-dealers comply with the requirements of these provisions. The information collected pursuant to the ''short exempt'' marking requirement of Rule 200(g) also provides an indication to a trading center of when it must execute or display a short sale order without regard to whether the short sale order is at a price that is less than or equal to the current national best bid.

It is estimated that SRO and non-SRO respondents registered with the Commission and subject to the collection of information requirements of Rule 201 and Rule 200(g) incur an aggregate annual burden of 2,908,309 hours to comply with the rules and an aggregate annual external cost of $120,000.

Written comments are invited on: (a) Whether the proposed collection of information is necessary for the proper performance of the functions of the Commission, including whether the information shall have practical utility; (b) the accuracy of the Commission's estimates of the burden of the proposed collection of information; (c) ways to enhance the quality, utility, and clarity of the information collected; and (d) ways to minimize the burden of the collection of information on respondents, including through the use of automated collection techniques or other forms of information technology. Consideration will be given to comments and suggestions submitted in writing within 60 days of this publication.

An agency may not conduct or sponsor, and a person is not required to respond to, a collection of information under the PRA unless it displays a currently valid OMB control number.

Please direct your written comments to: Pamela Dyson, Director/Chief Information Officer, Securities and Exchange Commission, c/o Remi Pavlik-Simon, 100 F Street NE., Washington, DC 20549, or send an email to: *PRA_Mailbox@sec.gov.*

Dated: November 7, 2016.

Brent J. Fields,

Secretary.

[FR Doc. 2016–27248 Filed 11–10–16; 8:45 am]

BILLING CODE 8011–01–P

SECURITIES AND EXCHANGE COMMISSION

[Release No. 34–79255; File No. SR–BatsBZX–2016–69]

Self-Regulatory Organizations; Bats BZX Exchange, Inc.; Notice of Filing and Immediate Effectiveness of Proposed Rule Change Related to Fees for Use of the Exchange's Equity Options Platform

November 7, 2016.

Pursuant to Section 19(b)(1) of the Securities Exchange Act of 1934 (''Act'') [1] and Rule 19b–4 thereunder,[2] notice is hereby given that on October 27, 2016, Bats BZX Exchange, Inc. (''BZX'' or the ''Exchange'') filed with the Securities and Exchange Commission (''Commission'') the proposed rule change as described in Items I, II, and III below, which Items have been prepared by the Exchange. The Commission is publishing this notice to solicit comments on the proposed rule change from interested persons.

I. Self-Regulatory Organization's Statement of the Terms of Substance of the Proposed Rule Change

The Exchange filed a proposal to amend the fee schedule applicable to Members [3] and non-Members of the Exchange pursuant to BZX Rules 15.1(a) and (c).

The text of the proposed rule change is available at the Exchange's Web site at *www.batstrading.com,* at the principal office of the Exchange, and at the Commission's Public Reference Room.

II. Self-Regulatory Organization's Statement of the Purpose of, and Statutory Basis for, the Proposed Rule Change

In its filing with the Commission, the Exchange included statements concerning the purpose of and basis for the proposed rule change and discussed any comments it received on the proposed rule change. The text of these statements may be examined at the places specified in Item IV below. The Exchange has prepared summaries, set forth in Sections A, B, and C below, of the most significant parts of such statements.

[1] 15 U.S.C. 78s(b)(1).

[2] 17 CFR 240.19b–4.

[3] The term ''Member'' is defined as ''any registered broker or dealer that has been admitted to membership in the Exchange.'' *See* Exchange Rule 1.5(n).

A. Self-Regulatory Organization's Statement of the Purpose of, and the Statutory Basis for, the Proposed Rule Change

1. Purpose

The Exchange proposes to modify its fee schedule applicable to the Exchange's equity options platform (''BZX Options'') to add a new Step-Up Tier under footnote 3, Non-Customer Penny Pilot Take Volume Tiers.

The Exchange appends fee code PP to Non-Customer [4] orders in Penny Pilot Securities [5] that removes liquidity. Orders that yield fee code PP are charged a fee of $0.50 per contract. The Exchange offers three tiers under footnote 3, Non-Customer Penny Pilot Take Volume Tiers, which offer reduced fees for Non-Customer orders that yield fee code PP upon achieving each tier's required criteria. Under Tier 1, orders that yield fee code PP will be eligible for a reduced fee of $044 [sic] per contract where the Member has: (i) an ADAV [6] in Customer [7] orders equal to or greater than 0.60% of average TCV; [8] (ii) an ADAV in Market Maker [9] orders equal to or greater than 0.25% of average TCV; and (iii) on the Exchange's equities platform, BZX Equities, an ADAV equal to or greater than 0.30% of average TCV. Under Tier 2, orders that yield fee code PP will be eligible for a reduced fee of $0.47 per contract where the Member has an ADAV in Customer orders equal to or greater than 1.00% of average TCV. Lastly, under Tier 3, orders that yield fee code PP will be eligible for a reduced fee of $0.44 per contract where the Member has an ADAV in Customer orders equal to or greater than 1.30% of average TCV.

The Exchange now proposes to reduce the above fees by $0.01 for Members that achieve certain additional volume requirements. Specifically, the Exchange proposes to add a Step-Up tier under footnote 3 such that the fee charged to a Member under fee code PP and the Non-Customer Penny Pilot Take Volume Tiers described above would be reduced by $0.01 per contract where the Member has an Options Step-Up Add TCV [10] in Customer orders from September 2016 baseline equal to or greater than 0.30%. The criteria for the proposed Step-Up Tier under footnote 3 would be in addition the criteria required by the three Non-Customer Take Volume tiers under footnote 3.

Implementation Date

The Exchange proposes to implement these amendments to its fee schedule as of November 1, 2016.

2. Statutory Basis

The Exchange believes that the proposed rule change is consistent with the objectives of Section 6 of the Act,[11] in general, and furthers the objectives of Section 6(b)(4),[12] in particular, as it is designed to provide for the equitable allocation of reasonable dues, fees and other charges among its Members and other persons using its facilities. Volume-based rebates such as those currently maintained on the Exchange have been widely adopted by equities and options exchanges and are equitable because they are open to all Members on an equal basis and provide additional benefits or discounts that are reasonably related to the value to an exchange's market quality associated with higher levels of market activity, such as higher levels of liquidity provision and/or growth patterns, and introduction of higher volumes of orders into the price and volume discovery processes. The addition of the Non-Customer Penny Pilot Take Volume Step-Up Tier is intended to incentivize Members to send additional orders to the Exchange in an effort to qualify for a further reduced fee for orders that yield fee code PP and the Non-Customer Penny Pilot Take Volume Tiers under footnote 3. The Exchange believes the rates remain competitive with those charged by other venues [13] and, therefore, are reasonable and equitably allocated to Members. The Exchange also notes that it operates in a highly-competitive market in which market participants can readily direct order flow to competing venues if they deem fee levels at a particular venue to be excessive. The Exchange believes that the proposed Step-Up Tier is equitable and non-discriminatory in that it would apply uniformly to all Members.

The Exchange also believes requiring the Member to have an Options Step-Up Add TCV in Customer orders from September 2016 baseline equal to or

[4] As defined in the Exchange's fee schedule *available at http://www.bats.com/us/options/membership/fee_schedule/bzx/*

[5] *Id.*

[6] *Id.*

[7] *Id.*

[8] *Id.*

[9] As defined in the Exchange's fee schedule *available at http://www.bats.com/us/options/membership/fee_schedule/bzx/.*

[10] *Id.*

[11] 15 U.S.C. 78f.

[12] 15 U.S.C. 78f(b)(4).

[13] *See* NYSE Arca, Inc.'s fee schedule *available at https://www.nyse.com/publicdocs/nyse/markets/arca-options/NYSE_Arca_Options_Fee_Schedule.pdf* (dated October 1, 2016) (offering additional credits to under incentive programs for customer, professional customer, and market maker orders as well as a separate take fee discount qualification tier).

greater than 0.30% is also equitable and reasonable. Such pricing programs reward a Member's growth pattern on the Exchange and such increased volume increases potential revenue to the Exchange, and will allow the Exchange to continue to provide and potentially expand the incentive programs operated by the Exchange. The Exchange believes that providing additional financial incentives to Members that demonstrate an increase over their September 2016 Options Step-Up Add TCV through the proposed tier offers an additional, flexible way to achieve financial incentives from the Exchange and encourage Members to add liquidity to the Exchange. The Exchange believes that this incentive is reasonable, fair and equitable because the liquidity from the proposed tier also benefits all investors by deepening the Exchange's liquidity pool, offering additional flexibility for all investors to enjoy cost savings, supporting the quality of price discovery, promoting market transparency and improving investor protection. These pricing programs are also fair and equitable in that they are available to all Members and will result in Members receiving either the same or an increased rebate than they would currently receive.

B. Self-Regulatory Organization's Statement on Burden on Competition

The Exchange believes the proposed amendment to its fee schedule would not impose any burden on competition that is not necessary or appropriate in furtherance of the purposes of the Act. To the contrary, the Exchange has designed the proposed amendment to its fee schedule to enhance its ability to compete with other exchanges. Also, the Exchange believes that the addition of the proposed tier contributes to rather than burdens competition, as such tier is intended to incentivize Members to increase their participation on the Exchange, which will increase the liquidity and market quality on the Exchange, which will then further enhance the Exchange's ability to compete with other exchanges.

The Exchange does not believe that the proposed change will impair the ability of Members or competing venues to maintain their competitive standing in the financial markets. Additionally, Members may opt to disfavor the Exchange's pricing if they believe that alternatives offer them better value. Accordingly, the Exchange does not believe that the proposed change to the Exchange's tiered pricing structure burdens competition, but instead, enhances competition as it is intended to increase the competitiveness of the Exchange.

C. Self-Regulatory Organization's Statement on Comments on the Proposed Rule Change Received From Members, Participants, or Others

The Exchange has not solicited, and does not intend to solicit, comments on this proposed rule change. The Exchange has not received any written comments from members or other interested parties.

III. Date of Effectiveness of the Proposed Rule Change and Timing for Commission Action

The foregoing rule change has become effective pursuant to Section 19(b)(3)(A) of the Act [14] and paragraph (f) of Rule 19b–4 thereunder.[15] At any time within 60 days of the filing of the proposed rule change, the Commission summarily may temporarily suspend such rule change if it appears to the Commission that such action is necessary or appropriate in the public interest, for the protection of investors, or otherwise in furtherance of the purposes of the Act.

IV. Solicitation of Comments

Interested persons are invited to submit written data, views, and arguments concerning the foregoing, including whether the proposed rule change is consistent with the Act. Comments may be submitted by any of the following methods:

Electronic Comments

- Use the Commission's Internet comment form (*http://www.sec.gov/rules/sro.shtml*); or
- Send an email to *rule-comments@sec.gov*. Please include File Number SR-BatsBZX–2016–69 on the subject line.

Paper Comments

- Send paper comments in triplicate to Brent J. Fields, Secretary, Securities and Exchange Commission, 100 F Street NE., Washington, DC 20549–1090.

All submissions should refer to File Number SR–BatsBZX–2016–69. This file number should be included on the subject line if email is used. To help the Commission process and review your comments more efficiently, please use only one method. The Commission will post all comments on the Commission's Internet Web site (*http://www.sec.gov/rules/sro.shtml*). Copies of the submission, all subsequent amendments, all written statements with respect to the proposed rule change that are filed with the Commission, and all written communications relating to the proposed rule change between the Commission and any person, other than those that may be withheld from the public in accordance with the provisions of 5 U.S.C. 552, will be available for Web site viewing and printing in the Commission's Public Reference Room, 100 F Street NE., Washington, DC 20549 on official business days between the hours of 10:00 a.m. and 3:00 p.m. Copies of such filing also will be available for inspection and copying at the principal office of the Exchange. All comments received will be posted without change; the Commission does not edit personal identifying information from submissions. You should submit only information that you wish to make available publicly. All submissions should refer to File Number SR–BatsBZX–2016–69, and should be submitted on or before December 5, 2016.

For the Commission, by the Division of Trading and Markets, pursuant to delegated authority.[16]

Brent J. Fields,

Secretary.

[FR Doc. 2016–27238 Filed 11–10–16; 8:45 am]

BILLING CODE 8011–01–P

[14] 15 U.S.C. 78s(b)(3)(A).

[15] 17 CFR 240.19b–4(f).

[16] 17 CFR 200.30–3(a)(12).

SECURITIES AND EXCHANGE COMMISSION

Sunshine Act Meeting

Notice is hereby given that, pursuant to the provisions of the Government in the Sunshine Act, Public Law 94–409, the Securities and Exchange Commission will hold an Open Meeting on Tuesday, November 15, 2016, at 3:00 p.m., in the Auditorium, Room L–002.

The subject matter of the Open Meeting will be:

- The Commission will consider whether to approve a proposed national market system (''NMS'') plan to create, implement, and maintain a consolidated audit trail, submitted pursuant to Rule 613 of Regulation NMS.

At times, changes in Commission priorities require alterations in the scheduling of meeting items.

For further information and to ascertain what, if any, matters have been added, deleted, or postponed, please contact Brent J. Fields in the Office of the Secretary at (202) 551–5400.

Dated: November 8, 2016.

Brent J. Fields,

Secretary.

[FR Doc. 2016–27378 Filed 11–9–16; 11:15 am]

BILLING CODE 8011–01–P

SMALL BUSINESS ADMINISTRATION

[Disaster Declaration #14960 and #14961]

MINNESOTA Disaster #MN–00060

AGENCY: U.S. Small Business Administration.

ACTION: Notice.

SUMMARY: This is a Notice of the Presidential declaration of a major disaster for Public Assistance Only for the State of Minnesota (FEMA–4290–DR), dated 11/02/2016.

Incident: Severe Storms and Flooding.

Incident Period: 09/21/2016 through 09/24/2016.

Effective Date: 11/02/2016.

Physical Loan Application Deadline Date: 01/03/2017.

Economic Injury (EIDL) Loan Application Deadline Date: 08/02/2017.

ADDRESSES: Submit completed loan applications to: U.S. Small Business Administration, Processing And Disbursement Center, 14925 Kingsport Road, Fort Worth, TX 76155.

FOR FURTHER INFORMATION CONTACT: A. Escobar, Office of Disaster Assistance, U.S. Small Business Administration, 409 3rd Street SW., Suite 6050, Washington, DC 20416.

SUPPLEMENTARY INFORMATION: Notice is hereby given that as a result of the President's major disaster declaration on 11/02/2016, Private Non-Profit organizations that provide essential services of governmental nature may file disaster loan applications at the address listed above or other locally announced locations.

The following areas have been determined to be adversely affected by the disaster:

Primary Counties:

Blue Earth, Fillmore, Freeborn, Goodhue, Houston, Le Sueur, Rice, Steele, Waseca.

The Interest Rates are:

	Percent
For Physical Damage:	
Non-Profit Organizations With Credit Available Elsewhere	2.625
Non-Profit Organizations Without Credit Available Elsewhere	2.625
For Economic Injury:	
Non-Profit Organizations Without Credit Available Elsewhere	2.625

The number assigned to this disaster for physical damage is 14960B and for economic injury is 14961B.

(Catalog of Federal Domestic Assistance Number 59008)

James E. Rivera,

Associate Administrator for Disaster Assistance.

[FR Doc. 2016–27240 Filed 11–10–16; 8:45 am]

BILLING CODE 8025–01–P

SMALL BUSINESS ADMINISTRATION

[Disaster Declaration #14886 and #14887]

Florida Disaster Number FL–00118

AGENCY: U.S. Small Business Administration.

ACTION: Amendment 1.

SUMMARY: This is an amendment of the Presidential declaration of a major disaster for the State of Florida (FEMA–4280–DR), dated 09/28/2016.

Incident: Hurricane Hermine.

Incident Period: 08/31/2016 through 09/11/2016.

Effective Date: 11/02/2016.

Physical Loan Application Deadline Date: 11/28/2016.

EIDL Loan Application Deadline Date: 06/28/2017.

ADDRESSES: Submit completed loan applications to: U.S. Small Business Administration, Processing and Disbursement Center, 14925 Kingsport Road, Fort Worth, TX 76155.

FOR FURTHER INFORMATION CONTACT: A. Escobar, Office of Disaster Assistance, U.S. Small Business Administration, 409 3rd Street SW., Suite 6050, Washington, DC 20416.

SUPPLEMENTARY INFORMATION: The notice of the Presidential disaster declaration for the State of FLORIDA, dated 09/28/2016 is hereby amended to include the following areas as adversely affected by the disaster:

Primary Counties (Physical Damage and Economic Injury Loans): Manatee, Taylor, Wakulla

Contiguous Counties (Economic Injury Loans Only):

Florida: Desoto, Franklin, Madison, Sarasota

All other information in the original declaration remains unchanged.

(Catalog of Federal Domestic Assistance Number 59008)

James E. Rivera,

Associate Administrator for Disaster Assistance.

[FR Doc. 2016–27231 Filed 11–10–16; 8:45 am]

BILLING CODE 8025–01–P

SMALL BUSINESS ADMINISTRATION

[Disaster Declaration #14936 and #14937]

Florida Disaster Number FL–00120

AGENCY: U.S. Small Business Administration.

ACTION: Amendment 4.

SUMMARY: This is an amendment of the Presidential declaration of a major disaster for Public Assistance Only for the State of Florida (FEMA–4283–DR), dated 10/24/2016.

Incident: Hurricane Matthew.

Incident Period: 10/03/2016 through 10/19/2016.

DATES:

Effective Date: 11/04/2016.

Physical Loan Application Deadline Date: 12/23/2016.

Economic Injury (EIDL) Loan Application Deadline Date: 07/24/2017.

ADDRESSES: Submit completed loan applications to: U.S. Small Business Administration, Processing and Disbursement Center, 14925 Kingsport Road, Fort Worth, TX 76155.

FOR FURTHER INFORMATION CONTACT: A. Escobar, Office of Disaster Assistance, U.S. Small Business Administration, 409 3rd Street SW., Suite 6050, Washington, DC 20416.

SUPPLEMENTARY INFORMATION: The notice of the President's major disaster declaration for Private Non-Profit organizations in the State of FLORIDA, dated 10/24/2016, is hereby amended to include the following areas as adversely affected by the disaster.

Primary Counties: Broward, Orange, Osceola

All other information in the original declaration remains unchanged.

(Catalog of Federal Domestic Assistance Number 59008)

James E. Rivera,

Associate Administrator for Disaster Assistance.

[FR Doc. 2016–27232 Filed 11–10–16; 8:45 am]

BILLING CODE 8025–01–P

SMALL BUSINESS ADMINISTRATION

[Disaster Declaration #14911 and #14912]

North Carolina Disaster Number NC–00081

AGENCY: U.S. Small Business Administration.

ACTION: Amendment 12.

SUMMARY: This is an amendment of the Presidential declaration of a major disaster for the State of North Carolina (FEMA—4285–DR), dated 10/10/2016.

Incident: Hurricane Matthew.
Incident Period: 10/04/2016 and continuing.

DATE: *Effective Date: 11/03/2016.*
Physical Loan Application Deadline Date: 12/09/2016.
EIDL Loan Application Deadline Date: 07/10/2017.

ADDRESSES: Submit completed loan applications to: U.S. Small Business Administration, Processing and Disbursement Center, 14925 Kingsport Road, Fort Worth, TX 76155.

FOR FURTHER INFORMATION CONTACT: A. Escobar, Office of Disaster Assistance, U.S. Small Business Administration, 409 3rd Street SW., Suite 6050, Washington, DC 20416

SUPPLEMENTARY INFORMATION: The notice of the Presidential disaster declaration for the State of North Carolina, dated 10/10/2016 is hereby amended to include the following areas as adversely affected by the disaster:

Primary Counties (Physical Damage and Economic Injury Loans):
Anson, Carteret, Chatham, Northampton, Perquimans, Richmond, Scotland.
Contiguous Counties (Economic Injury Loans Only):
North Carolina: Alamance, Orange, Stanly, Union.
South Carolina: Chesterfield.
Virginia: Brunswick, Greensville.

All other information in the original declaration remains unchanged.
(Catalog of Federal Domestic Assistance Number 59008)

Rafaela Monchek,
Acting Associate Administrator for Disaster Assistance.

[FR Doc. 2016–27230 Filed 11–10–16; 8:45 am]

BILLING CODE 8025–01–P

SMALL BUSINESS ADMINISTRATION

[Disaster Declaration #14911 and #14912]

North Carolina Disaster Number NC–00081

AGENCY: U.S. Small Business Administration.

ACTION: Amendment 11.

SUMMARY: This is an amendment of the Presidential declaration of a major disaster for the State of North Carolina (FEMA–4285–DR), dated 10/10/2016.
Incident: Hurricane Matthew.
Incident Period: 10/04/2016 and continuing.
Effective Date: 11/01/2016.
Physical Loan Application Deadline Date: 12/09/2016.
EIDL Loan Application Deadline Date: 07/10/2017.

ADDRESSES: Submit completed loan applications to: U.S. Small Business Administration, Processing and Disbursement Center, 14925 Kingsport Road, Fort Worth, TX 76155.

FOR FURTHER INFORMATION CONTACT: A. Escobar, Office of Disaster Assistance, U.S. Small Business Administration, 409 3rd Street SW., Suite 6050, Washington, DC 20416.

SUPPLEMENTARY INFORMATION: The notice of the Presidential disaster declaration for the State of North Carolina, dated 10/10/2016 is hereby amended to include the following areas as adversely affected by the disaster:

Primary Counties (Physical Damage and Economic Injury Loans): Hertford.

All counties contiguous to the above listed county have previously been declared.

All other information in the original declaration remains unchanged.

(Catalog of Federal Domestic Assistance Number 59008)

James E. Rivera,
Associate Administrator for Disaster Assistance.

[FR Doc. 2016–27233 Filed 11–10–16; 8:45 am]

BILLING CODE 8025–01–P

SMALL BUSINESS ADMINISTRATION

[Disaster Declaration #14958 and #14959]

Virginia Disaster #VA–00065

AGENCY: U.S. Small Business Administration.

ACTION: Notice.

SUMMARY: This is a Notice of the Presidential declaration of a major disaster for the Commonwealth of Virginia (FEMA–4291–DR), dated 11/02/2016.
Incident: Hurricane Matthew.
Incident Period: 10/07/2016 and continuing.
Effective Date: 11/02/2016.
Physical Loan Application Deadline Date: 01/03/2017.
Economic Injury (EIDL) Loan Application Deadline Date: 08/02/2017.

ADDRESSES: Submit completed loan applications to: U.S. Small Business Administration, Processing and Disbursement Center, 14925 Kingsport Road, Fort Worth, TX 76155.

FOR FURTHER INFORMATION CONTACT: A. Escobar, Office of Disaster Assistance, U.S. Small Business Administration, 409 3rd Street SW., Suite 6050, Washington, DC 20416.

SUPPLEMENTARY INFORMATION: Notice is hereby given that as a result of the President's major disaster declaration on 11/02/2016, applications for disaster loans may be filed at the address listed above or other locally announced locations.

The following areas have been determined to be adversely affected by the disaster:

Primary Counties (Physical Damage and Economic Injury Loans):
Chesapeake City, Newport News City, Norfolk City, Virginia Beach City
Contiguous Counties (Economic Injury Loans Only):
Virginia: Hampton City, James City, Portsmouth City, Suffolk City, York
North Carolina: Camden, Currituck

The Interest Rates are:

	Percent
For Physical Damage:	
Homeowners with Credit Available Elsewhere	3.125
Homeowners without Credit Available Elsewhere	1.563
Businesses with Credit Available Elsewhere	6.250
Businesses without Credit Available Elsewhere	4.000
Non–Profit Organizations with Credit Available Elsewhere	2.625
Non–Profit Organizations without Credit Available Elsewhere	2.625
For Economic Injury:	
Businesses & Small Agricultural Cooperatives without Credit Available Elsewhere	4.000
Non–Profit Organizations without Credit Available Elsewhere	2.625

The number assigned to this disaster for physical damage is 149588 and for economic injury is 149590.

(Catalog of Federal Domestic Assistance Number 59008)

James E. Rivera,
Associate Administrator for Disaster Assistance.

[FR Doc. 2016–27239 Filed 11–10–16; 8:45 am]

BILLING CODE 8025–01–P

DEPARTMENT OF STATE

[Delegation of Authority No. 405]

Delegation to the Assistant Secretary for Political-Military Affairs of Authority Under Section 1251 of the National Defense Authority Act for Fiscal Year 2016

By virtue of the authority vested in the Secretary of State, including section 1251 of the National Defense Authorization Act for Fiscal Year 2016 (Pub. L. 114–92) (NDAA) and section 1 of the State Department Basic Authorities Act, (22 U.S.C. 2651a), and

delegated pursuant to Delegation of Authority 245–1, dated February 13, 2009, I hereby delegate to the Assistant Secretary for Political-Military Affairs, to the extent authorized by law, the authority to exercise the functions conferred on the Secretary of State regarding the determination of countries eligible for the provision of training pursuant to section 1251 of the NDAA.

Notwithstanding this delegation of authority, any function or authority delegated herein may be exercised by the Secretary, the Deputy Secretary, the Deputy Secretary for Management and Resources, or the Under Secretary for Arms Control and International Security. Any reference in this delegation of authority to any statute or delegation of authority shall be deemed to be a reference to such statute or delegation of authority as amended from time to time.

This delegation of authority shall be published in the **Federal Register**.

Dated: September 6, 2016.

Antony J Blinken,

Deputy Secretary of State.

[FR Doc. 2016–27351 Filed 11–10–16; 8:45 am]

BILLING CODE 4710–25–P

DEPARTMENT OF STATE

[Public Notice: 9787]

In the Matter of the Amendment of the Designation of Al-Nusrah Front (and Other Aliases) as a Foreign Terrorist Organization Pursuant to Section 219 of the Immigration and Nationality Act, as Amended

Based upon a review of the Administrative Record assembled pursuant to Section 219 of the Immigration and Nationality Act, as amended (8 U.S.C. 1189) (''INA''), and in consultation with the Attorney General and the Secretary of the Treasury, I have concluded that there is a sufficient factual basis to find that Al-Nusrah Front (and other aliases) uses the additional alias Jabhat Fath al Sham, also known as Jabhat Fath al-Sham, also known as Jabhat Fatah al-Sham, also known as Jabhat Fateh al-Sham, also known as Fatah al-Sham Front, also known as Fateh Al-Sham Front, also known as Conquest of the Levant Front, also known as The Front for liberation of al Sham, also known as Front for the Conquest of Syria/the Levant, also known as Front for the Liberation of the Levant, also known as Front for the Conquest of Syria.

Therefore, pursuant to Section 219(b) of the INA, as amended (8 U.S.C. 1189(b)), I hereby amend the designation of Al-Nusrah Front as a foreign terrorist organization to include the following new aliases: Jabhat Fath al Sham, also known as Jabhat Fath al-Sham, also known as Jabhat Fatah al-Sham, also known as Jabhat Fateh al-Sham, also known as Fatah al-Sham Front, also known as Fateh Al-Sham Front, also known as Conquest of the Levant Front, also known as The Front for liberation of al Sham, also known as Front for the Conquest of Syria/the Levant, also known as Front for the Liberation of the Levant, also known as Front for the Conquest of Syria.

This determination shall be published in the **Federal Register**.

Dated: October 19, 2016.

John F. Kerry,

Secretary of State.

[FR Doc. 2016–27324 Filed 11–10–16; 8:45 am]

BILLING CODE 4710–AD–P

DEPARTMENT OF STATE

[Public Notice: 9788]

In the Matter of the Amendment of the Designation of Al-Nusrah Front (and Other Aliases) as a Specially Designated Global Terrorist

Based upon a review of the administrative record assembled in this matter, and in consultation with the Attorney General and the Secretary of the Treasury, I have concluded that there is a sufficient factual basis to find that Al-Nusrah Front (and other aliases), uses the alias Jabhat Fath al Sham, also known as Jabhat Fath al-Sham, also known as Jabhat Fatah al-Sham, also known as Jabhat Fateh al-Sham, also known as Fatah al-Sham Front, also known as Fateh Al-Sham Front, also known as Conquest of the Levant Front, also known as The Front for liberation of al Sham, also known as Front for the Conquest of Syria/the Levant, also known as Front for the Liberation of the Levant, also known as Front for the Conquest of Syria.

Therefore, pursuant to Section 1(b) of Executive Order 13224, I hereby amend the designation of Al-Nusrah Front as a Specially Designated Global Terrorist to include the following new aliases: Jabhat Fath al Sham, also known as Jabhat Fath al-Sham, also known as Jabhat Fatah al-Sham, also known as Jabhat Fateh al-Sham, also known as Fatah al-Sham Front, also known as Fateh Al-Sham Front, also known as Conquest of the Levant Front, also known as The Front for liberation of al Sham, also known as Front for the Conquest of Syria/the Levant, also known as Front for the Liberation of the Levant, also known as Front for the Conquest of Syria.

This determination shall be published in the **Federal Register**.

Dated: October 19, 2016.

John F. Kerry,

Secretary of State.

[FR Doc. 2016–27317 Filed 11–10–16; 8:45 am]

BILLING CODE 4710–AD–P

DEPARTMENT OF TRANSPORTATION

Federal Motor Carrier Safety Administration

[FMCSA Docket No. FMCSA–[2016–0220]

Qualification of Drivers; Exemption Applications; Diabetes Mellitus

AGENCY: Federal Motor Carrier Safety Administration (FMCSA), DOT.

ACTION: Notice of final disposition.

SUMMARY: FMCSA confirms its decision to exempt 58 individuals from its rule prohibiting persons with insulin-treated diabetes mellitus (ITDM) from operating commercial motor vehicles (CMVs) in interstate commerce. The exemptions enable these individuals to operate CMVs in interstate commerce.

DATES: The exemptions were effective on October 20, 2016. The exemptions expire on October 20, 2018.

FOR FURTHER INFORMATION CONTACT: Ms. Christine A. Hydock, Chief, Medical Programs Division, (202) 366–4001, *fmcsamedical@dot.gov,* FMCSA, Department of Transportation, 1200 New Jersey Avenue SE., Room W64–113, Washington, DC 20590–0001. Office hours are from 8:30 a.m. to 5 p.m. e.t., Monday through Friday, except Federal holidays.

SUPPLEMENTARY INFORMATION:

I. Electronic Access

You may see all the comments online through the Federal Document Management System (FDMS) at: *http://www.regulations.gov.*

Docket: For access to the docket to read background documents or comments, go to *http://www.regulations.gov* and/or Room W12–140 on the ground level of the West Building, 1200 New Jersey Avenue SE., Washington, DC, between 9 a.m. and 5 p.m., Monday through Friday, except Federal holidays.

Privacy Act: In accordance with 5 U.S.C. 553(c), DOT solicits comments from the public to better inform its rulemaking process. DOT posts these comments, without edit, including any personal information the commenter provides, to *www.regulations.gov,* as

described in the system of records notice (DOT/ALL–14 FDMS), which can be reviewed at *www.dot.gov/privacy.*

II. Background

On September 19, 2016, FMCSA published a notice of receipt of Federal diabetes exemption applications from 58 individuals and requested comments from the public (81 FR 64257. The public comment period closed on October 19, 2016, and no comments were received.

FMCSA has evaluated the eligibility of the 58 applicants and determined that granting the exemptions to these individuals would achieve a level of safety equivalent to or greater than the level that would be achieved by complying with the current regulation 49 CFR 391.41(b)(3).

Diabetes Mellitus and Driving Experience of the Applicants

The Agency established the current requirement for diabetes in 1970 because several risk studies indicated that drivers with diabetes had a higher rate of crash involvement than the general population. The diabetes rule provides that ''A person is physically qualified to drive a commercial motor vehicle if that person has no established medical history or clinical diagnosis of diabetes mellitus currently requiring insulin for control'' (49 CFR 391.41(b)(3)).

FMCSA established its diabetes exemption program, based on the Agency's July 2000 study entitled ''A Report to Congress on the Feasibility of a Program to Qualify Individuals with Insulin-Treated Diabetes Mellitus to Operate in Interstate Commerce as Directed by the Transportation Act for the 21st Century.'' The report concluded that a safe and practicable protocol to allow some drivers with ITDM to operate CMVs is feasible. The September 3, 2003 (68 FR 52441), **Federal Register** notice in conjunction with the November 8, 2005 (70 FR 67777), **Federal Register** notice provides the current protocol for allowing such drivers to operate CMVs in interstate commerce.

These 58 applicants have had ITDM over a range of 1 to 42 years. These applicants report no severe hypoglycemic reactions resulting in loss of consciousness or seizure, requiring the assistance of another person, or resulting in impaired cognitive function that occurred without warning symptoms, in the past 12 months and no recurrent (2 or more) severe hypoglycemic episodes in the past 5 years. In each case, an endocrinologist verified that the driver has demonstrated a willingness to properly monitor and manage his/her diabetes mellitus, received education related to diabetes management, and is on a stable insulin regimen. These drivers report no other disqualifying conditions, including diabetes-related complications. Each meets the vision requirement at 49 CFR 391.41(b)(10).

The qualifications and medical condition of each applicant were stated and discussed in detail in the September 19, 2016, **Federal Register** notice and they will not be repeated in this notice.

III. Discussion of Comments

FMCSA received no comments in this proceeding.

IV. Basis for Exemption Determination

Under 49 U.S.C. 31136(e) and 31315, FMCSA may grant an exemption from the diabetes requirement in 49 CFR 391.41(b)(3) if the exemption is likely to achieve an equivalent or greater level of safety than would be achieved without the exemption. The exemption allows the applicants to operate CMVs in interstate commerce.

To evaluate the effect of these exemptions on safety, FMCSA considered medical reports about the applicants' ITDM and vision, and reviewed the treating endocrinologists' medical opinion related to the ability of the driver to safely operate a CMV while using insulin.

Consequently, FMCSA finds that in each case exempting these applicants from the diabetes requirement in 49 CFR 391.41(b)(3) is likely to achieve a level of safety equal to that existing without the exemption.

V. Conditions and Requirements

The terms and conditions of the exemption will be provided to the applicants in the exemption document and they include the following: (1) That each individual submit a quarterly monitoring checklist completed by the treating endocrinologist as well as an annual checklist with a comprehensive medical evaluation; (2) that each individual reports within 2 business days of occurrence, all episodes of severe hypoglycemia, significant complications, or inability to manage diabetes; also, any involvement in an accident or any other adverse event in a CMV or personal vehicle, whether or not it is related to an episode of hypoglycemia; (3) that each individual provide a copy of the ophthalmologist's or optometrist's report to the medical examiner at the time of the annual medical examination; and (4) that each individual provide a copy of the annual medical certification to the employer for retention in the driver's qualification file, or keep a copy in his/her driver's qualification file if he/she is self-employed. The driver must also have a copy of the certification when driving, for presentation to a duly authorized Federal, State, or local enforcement official.

VI. Conclusion

Based upon its evaluation of the 58 exemption applications, FMCSA exempts the following drivers from the diabetes requirement in 49 CFR 391.41(b)(3), subject to the requirements cited above 49 CFR 391.64(b):

Ardell M. Banta, Sr. (IA)
Ronald I. Barker (MI)
William J. Bartlett (IA)
Griselda R. Begay (UT)
Darrell L. Boehning (IN)
John M. Bracken (PA)
Thomas E. Brennan (PA)
Matthew W. Brown (OK)
Norman Brown (ME)
Walter L. Coon, II (CA)
Roy L. Cox (NC)
Robert S. Downie, Jr. (PA)
Frank A. Eagen (WI)
Joseph F. Figueroa (WI)
Ernest R. Grasso (MA)
Nolan Graves (MI)
Darryl W. Grimes (TN)
Henry L. Hardin (GA)
John L. Hargis, Jr. (MO)
Michael G. Haskins (VA)
Howard C. Hayes (OK)
Kevin L. Hess (WA)
Joshua P. Hewson (ND)
Karen A. Holzwarth (PA)
Michael R. Jacklin (WI)
Richard P. Janney (DE)
Hershell D. Jones (KY)
William H. Kline (OH)
Mitchell A. Langford (OR)
Michael J. Lipovsky (CT)
Edward J. Manley (PA)
Joshua L. Mattas (PA)
Raymond E. McGuire (PA)
Ismael Mejia (WA)
James L. Morgan, Jr. (NC)
Shane M. Olden (PA)
Wade B. Patrick (NY)
Shawn B. Persinger (WY)
Timothy J. Peterson (NE)
Donald E. Ramper, Jr. (MD)
Jose W. Rodriguez (WI)
Stewart R. Rowell (TX)
William T. Shreeve (TN)
David L. Smith (TX)
James A. Stock (WI)
Marlon Taylor (OH)
Eddie B. Thacker (KY)
Earnest A. Tillman, III (FL)
William C. Tomlinson (GA)
David E. Walters (NM)
Brennan S. Watkins (VT)
Julius Williams (MS)

Kevin A. Wilson (WV)
Jeffrey S. Wine (IA)
John T. Witcraft (SD)
William B. Witzel (SC)
P. Wayne Woodward, Jr. (NY)
Richard Wynn (TX)

In accordance with 49 U.S.C. 31136(e) and 31315 each exemption is valid for two years unless revoked earlier by FMCSA. The exemption will be revoked if the following occurs: (1) The person fails to comply with the terms and conditions of the exemption; (2) the exemption has resulted in a lower level of safety than was maintained before it was granted; or (3) continuation of the exemption would not be consistent with the goals and objectives of 49 U.S.C. 31136(e) and 31315. If the exemption is still effective at the end of the 2-year period, the person may apply to FMCSA for a renewal under procedures in effect at that time.

Issued on: November 2, 2016.

Larry W. Minor,

Associate Administrator for Policy.

[FR Doc. 2016–27271 Filed 11–10–16; 8:45 am]

BILLING CODE 4910–EX–P

DEPARTMENT OF TRANSPORTATION

Federal Motor Carrier Safety Administration

[Docket No. FMCSA–2012–0268]

Hours of Service of Drivers: Trailways Companies Exemption; FAST Act Extension of Expiration Date

AGENCY: Federal Motor Carrier Safety Administration (FMCSA), DOT.

ACTION: Notice; extension of exemption.

SUMMARY: FMCSA announces the extension of the 2015 exemption granted to Trailways Companies (Trailways) and other regular-route for-hire passenger carriers. The Agency extends the expiration date from June 4, 2015, to June 4, 2020, in response to the ''Fixing America's Surface Transportation Act'' (FAST Act). That Act extends the expiration date of hours-of-service (HOS) exemptions in effect on the date of enactment of the FAST Act to 5 years from the date of issuance of the exemptions. This exemption provides that drivers of passenger-carrying vehicles with regularly scheduled routes are exempted from changing their duty status from ''driving'' to ''on-duty not driving'' when making stops of less than 10 minutes for the limited purpose of picking up or dropping off passengers, baggage, or small express packages. The Agency previously determined that operations under this exemption would likely achieve a level of safety equivalent to or greater than the level of safety that would be obtained in the absence of the exemption.

DATES: This limited exemption is effective from June 4, 2015, through June 4, 2020.

FOR FURTHER INFORMATION CONTACT: Mr. Thomas Yager, Chief, FMCSA Driver and Carrier Operations Division; Office of Carrier, Driver and Vehicle Safety Standards; Telephone: 614–942–6477. Email: *MCPSD@dot.gov.*

SUPPLEMENTARY INFORMATION:

Legal Basis

FMCSA has authority under 49 U.S.C. 31136(e) and 31315 to grant exemptions from certain parts of the Federal Motor Carrier Safety Regulations. FMCSA must publish a notice of each exemption request in the **Federal Register** [49 CFR 381.315(a)].

Section 5206(b)(2)(A) of the ''Fixing America's Surface Transportation Act,'' (FAST Act), effective October 1, 2015, requires FMCSA to extend any exemption from any provision of the HOS regulations under 49 CFR part 395 that was in effect on the date of enactment of the Act for a period of 5 years from the date the exemption was granted. The exemption may be renewed. Because this action merely implements a statutory mandate that took effect on the date of enactment of the FAST Act, notice and comment are not required.

Trailways Exemption

Trailways, a regular-route passenger carrier, applied for a limited exemption on behalf of Adirondack Trailways, Pine Hill Trailways, New York Trailways and all other regular-route passenger carriers and their drivers, from the change of duty status requirements in 49 CFR 395.8(c). Trailways had requested that drivers with regularly scheduled routes be exempted from changing their duty status from ''driving'' to ''on-duty not driving'' when making stops of less than 10 minutes for the limited purpose of picking up or dropping off passengers, baggage, or small express packages.

FMCSA reviewed the application and the public comments and concluded that allowing these drivers to perform their daily duties without having to record short-term changes in duty status would promote safety at least as effectively as the logbook regulations in 49 CFR part 395.8(c). Trailways held a similar 2-year exemption from 2013 to 2015. A Notice of Final Determination granting the Trailways exemption was published on June 4, 2015 [80 FR 31961].

The substance of the exemption is not affected by this extension. The exemption covers only the driver's record of duty status regulations [49 CFR 395.8(c)]. The exemption is restricted to drivers employed by Trailways and other regular-route for-hire passenger carriers. Instead of complying with the provisions in 49 CFR 395.8(c), these drivers are exempted from changing their duty status from ''driving'' to ''on-duty not driving'' when making stops of less than 10 minutes.

The FMCSA does not believe the safety record of any driver operating under this exemption will deteriorate. However, should deterioration in safety occur, FMCSA will take all steps necessary to protect the public interest, including revocation of the exemption. The FMCSA has the authority to terminate the exemption at any time the Agency has the data/information to conclude that safety is being compromised.

Issued on: November 3, 2016.

T.F. Scott Darling, III,

Administrator.

[FR Doc. 2016–27269 Filed 11–10–16; 8:45 am]

BILLING CODE 4910–EX–P

DEPARTMENT OF TRANSPORTATION

Federal Motor Carrier Safety Administration

[Docket No. FMCSA–2014–0420]

Hours of Service of Drivers: Specialized Carriers & Rigging Association (SC&RA) Exemption; FAST Act Extension of Expiration Date

AGENCY: Federal Motor Carrier Safety Administration (FMCSA), DOT.

ACTION: Notice; extension of exemption.

SUMMARY: FMCSA announces the extension of the 2015 exemption granted to the Specialized Carriers and Rigging Association (SC&RA) for the transportation of loads that exceed normal weight and dimensional limits. The exemption applies to all oversize-overweight permitted loads whose drivers are not required to comply with the 30-minute rest break rule. The Agency extends the expiration date to June 17, 2020, in response to section 5206(b)(2)(A) of the ''Fixing America's Surface Transportation Act'' (FAST Act). That section extends the expiration date of hours-of-service (HOS) exemptions in effect on the date of enactment of the FAST Act to 5 years

from the date of issuance of the exemptions. The SC&RA exemption from the Agency's 30-minute rest break requirement is limited to drivers of specialized loads moving in interstate commerce that exceed normal weight and dimension limits—oversize/overweight (OS/OW) loads—and require a permit issued by a government authority. The Agency previously determined that the drivers of specialized commercial motor vehicles (CMV) under this exemption would likely achieve a level of safety equivalent to or greater than the level of safety that would be obtained in the absence of the exemption.

DATES: This limited exemption is effective from June 18, 2015, through June 17, 2020.

FOR FURTHER INFORMATION CONTACT: Mr. Thomas Yager, Chief, FMCSA Driver and Carrier Operations Division; Office of Carrier, Driver and Vehicle Safety Standards; Telephone: 614–942–6477. Email: *MCPSD@dot.gov.*

SUPPLEMENTARY INFORMATION:

Legal Basis

FMCSA has authority under 49 U.S.C. 31136(e) and 31315 to grant exemptions from certain parts of the Federal Motor Carrier Safety Regulations. FMCSA must publish a notice of each exemption request in the **Federal Register** [49 CFR 381.315(a)].

Section 5206(b)(2)(A) of the FAST Act requires FMCSA to extend any exemption from any provision of the HOS regulations under 49 CFR part 395 that was in effect on the date of enactment of the Act for a period of 5 years from the date the exemption was granted. The exemption may be renewed. Because this action merely implements a statutory mandate that took effect on the date of enactment of the FAST Act, notice and comment are not required.

SC&RA Exemption

The SC&RA, a trade association, applied for a limited exemption from the mandatory rest break requirement of 49 CFR 395.3(a)(3)(ii) on behalf of all specialized carriers and drivers responsible for the transportation of loads exceeding standard legal weight and dimensional limits—oversize/overweight (OS/OW) loads—that require a permit issued by a government authority.

FMCSA reviewed SC&RA's application and the public comments and concluded that limiting the exemption to these OS/OW permitted loads would promote safety at least as effectively as the 30-minute break. Because hours in which an OS/OW load can travel are restricted by permit requirements, often those hours are in conflict with the timing of the required 30-minute rest break. A Notice of Final Determination granting the SC&RA exemption was published on June 18, 2015 [80 FR 34957].

The substance of the exemption is not affected by this extension. The exemption covers only the 30-minute rest break requirement [49 CFR 395.3(a)(3)(ii)]. The exemption is restricted to drivers of specialized loads moving in interstate commerce that exceed normal weight and dimensional limits—OS/OW loads—and require a permit issued by a government authority.

The FMCSA does not believe the safety record of any driver operating under this exemption will deteriorate. However, should deterioration in safety occur, FMCSA will take all steps necessary to protect the public interest, including revocation of the exemption. The FMCSA has the authority to terminate the exemption at any time the Agency has the data/information to conclude that safety is being compromised.

Issued on: November 3, 2016.

T.F. Scott Darling, III,

Administrator.

[FR Doc. 2016–27267 Filed 11–10–16; 8:45 am]

BILLING CODE 4910–EX–P

DEPARTMENT OF TRANSPORTATION

National Highway Traffic Safety Administration

[Docket No. NHTSA–2016–0107; Notice 1]

The Goodyear Tire & Rubber Company, Receipt of Petition for Decision of Inconsequential Noncompliance

AGENCY: National Highway Traffic Safety Administration (NHTSA), Department of Transportation (DOT).

ACTION: Receipt of petition.

SUMMARY: The Goodyear Tire & Rubber Company (Goodyear), has determined that certain Goodyear tires do not fully comply with paragraph S6.5(f) of Federal Motor Vehicle Safety Standard (FMVSS) No. 119, *New pneumatic tires for motor vehicles with a GVWR of more than 4,536 kilograms (10,000 pounds) and motorcycles.* Goodyear filed a report dated September 27, 2016, pursuant to 49 CFR part 573, *Defect and Noncompliance Responsibility and Reports.* Goodyear then petitioned NHTSA under 49 CFR part 556 for a decision that the subject noncompliance is inconsequential as it relates to motor vehicle safety.

DATES: The closing date for comments on the petition is December 14, 2016.

ADDRESSES: Interested persons are invited to submit written data, views, and arguments on this petition. Comments must refer to the docket and notice number cited in the title of this notice and submitted by any of the following methods:

- *Mail:* Send comments by mail addressed to U.S. Department of Transportation, Docket Operations, M–30, West Building Ground Floor, Room W12–140, 1200 New Jersey Avenue SE., Washington, DC 20590.
- *Hand Delivery:* Deliver comments by hand to U.S. Department of Transportation, Docket Operations, M–30, West Building Ground Floor, Room W12–140, 1200 New Jersey Avenue SE., Washington, DC 20590. The Docket Section is open on weekdays from 10 a.m. to 5 p.m. except Federal Holidays.
- *Electronically:* Submit comments electronically by logging onto the Federal Docket Management System (FDMS) Web site at *https://www.regulations.gov/.* Follow the online instructions for submitting comments.
- Comments may also be faxed to (202) 493–2251.

Comments must be written in the English language, and be no greater than 15 pages in length, although there is no limit to the length of necessary attachments to the comments. If comments are submitted in hard copy form, please ensure that two copies are provided. If you wish to receive confirmation that comments you have submitted by mail were received, please enclose a stamped, self-addressed postcard with the comments. Note that all comments received will be posted without change to *https://www.regulations.gov,* including any personal information provided.

All comments and supporting materials received before the close of business on the closing date indicated above will be filed in the docket and will be considered. All comments and supporting materials received after the closing date will also be filed and will be considered to the fullest extent possible.

When the petition is granted or denied, notice of the decision will also be published in the **Federal Register** pursuant to the authority indicated at the end of this notice.

All comments, background documentation, and supporting materials submitted to the docket may be viewed by anyone at the address and

times given above. The documents may also be viewed on the Internet at *https://www.regulations.gov* by following the online instructions for accessing the dockets. The docket ID number for this petition is shown in the heading of this notice.

DOT's complete Privacy Act Statement is available for review in a **Federal Register** notice published on April 11, 2000, (65 FR 19477–78).

SUPPLEMENTARY INFORMATION:

I. *Overview:* Pursuant to 49 U.S.C. 30118(d) and 30120(h) and their implementing regulations at 49 CFR part 556, Goodyear submitted a petition for an exemption from the notification and remedy requirements of 49 U.S.C. Chapter 301 on the basis that this noncompliance is inconsequential as it relates to motor vehicle safety.

This notice of receipt of Goodyear's petition is published under 49 U.S.C. 30118 and 30120 and does not represent any agency decision or other exercise of judgment concerning the merits of the petition.

II. *Tires Involved:* Affected are approximately 381 Goodyear G182 RSD size 11R22.5 LR G commercial truck tires manufactured between July 3, 2016, and August 20, 2016.

III. *Noncompliance:* Goodyear explains that because the sidewall markings on the reference side of the subject tires incorrectly identify the number of plies as ''TREAD 4 PLIES STEEL CORD'' instead of the correct labelling ''TREAD 5 PLIES STEEL CORD,'' the tires do not meet the requirements of paragraph S6.5(f) of FMVSS No. 119.

IV. *Rule Text:* Paragraph S6.5(f) of FMVSS No. 119 provides, in pertinent part:

S6.5 Tire markings. Except as specified in this paragraph, each tire shall be marked on each sidewall with the information specified in paragraphs (a) through (j) of this section . . .

(f) The actual number of plies and the composition of the ply cord material in the sidewall and, if different, in the tread area; . . .

V. *Summary of Goodyear's Petition:* Goodyear described the subject noncompliance and stated its belief that the noncompliance is inconsequential as it relates to motor vehicle safety.

In support of its petition, Goodyear submitted the following:

Goodyear believes this noncompliance is inconsequential to motor vehicle safety because these tires were manufactured as designed and meet or exceed all applicable Federal Motor Vehicles Safety performance standards. All of the sidewall markings related to tire service (load capacity, corresponding inflation pressure, etc.) are correct. Even though the tires were labeled incorrectly as ''TREAD 4 PLIES STEEL CORD'' on one side of the tires, the tires were manufactured with ''TREAD 5 PLIES STEEL CORD'', which is correctly marked on the opposite tire sidewall. The mislabeling of these tires is not a safety concern and also has no impact on the retreading and recycling industries. The affected tire mold has already been corrected and all future production will have the correct number of plies shown on both sidewalls.

Goodyear noted that NHTSA has previously granted petitions for the same noncompliance related to tire construction information on tires because of surveys that show most consumers do not base purchases on tire construction information found on the tire sidewall.

Goodyear concluded by expressing the belief that the subject noncompliance is inconsequential as it relates to motor vehicle safety, and that its petition to be exempted from providing notification of the noncompliance, as required by 49 U.S.C. 30118, and a remedy for the noncompliance, as required by 49 U.S.C. 30120, should be granted.

NHTSA notes that the statutory provisions (49 U.S.C. 30118(d) and 30120(h)) that permit manufacturers to file petitions for a determination of inconsequentiality allow NHTSA to exempt manufacturers only from the duties found in sections 30118 and 30120, respectively, to notify owners, purchasers, and dealers of a defect or noncompliance and to remedy the defect or noncompliance. Therefore, any decision on this petition only applies to the subject tires that Goodyear no longer controlled at the time it determined that the noncompliance existed. However, any decision on this petition does not relieve tire distributors and dealers of the prohibitions on the sale, offer for sale, or introduction or delivery for introduction into interstate commerce of the noncompliant tires under their control after Goodyear notified them that the subject noncompliance existed.

Authority: 49 U.S.C. 30118, 30120: Delegations of authority at 49 CFR 1.95 and 501.8.

Jeffrey M. Giuseppe,

Director, Office of Vehicle Safety Compliance.

[FR Doc. 2016–27275 Filed 11–10–16; 8:45 am]

BILLING CODE 4910–59–P

DEPARTMENT OF TRANSPORTATION

National Highway Traffic Safety Administration

[Docket No. NHTSA–2016–0092; Notice 1]

Mercedes-Benz USA, LLC, Receipt of Petition for Decision of Inconsequential Noncompliance

AGENCY: National Highway Traffic Safety Administration (NHTSA), Department of Transportation (DOT).

ACTION: Receipt of petition.

SUMMARY: Mercedes-Benz USA, LLC (MBUSA), has determined that certain model year (MY) 2016 Mercedes GL-Class multipurpose passenger vehicles do not fully comply with paragraph S4.3(d) of Federal Motor Vehicle Safety Standard (FMVSS) No. 110, *Tire Selection and Rims and Motor Home/Recreation Vehicle Trailer Load Carrying Capacity Information for Motor Vehicles with a GVWR of 4,536 kilograms (10,000 pounds) or Less.* MBUSA filed a report dated August 12, 2016, and amended it on August 29, 2016, pursuant to 49 CFR part 573, *Defect and Noncompliance Responsibility and Reports.* MBUSA then petitioned NHTSA under 49 CFR part 556 for a decision that the subject noncompliance is inconsequential as it relates to motor vehicle safety.

DATES: The closing date for comments on the petition is December 14, 2016.

ADDRESSES: Interested persons are invited to submit written data, views, and arguments on this petition. Comments must refer to the docket and notice number cited in the title of this notice and be submitted by any of the following methods:

- *Mail:* Send comments by mail addressed to U.S. Department of Transportation, Docket Operations, M–30, West Building Ground Floor, Room W12–140, 1200 New Jersey Avenue SE., Washington, DC 20590.
- *Hand Deliver:* Deliver comments by hand to U.S. Department of Transportation, Docket Operations, M–30, West Building Ground Floor, Room W12–140, 1200 New Jersey Avenue SE., Washington, DC 20590. The Docket Section is open on weekdays from 10 a.m. to 5 p.m. except Federal Holidays.
- *Electronically:* Submit comments electronically by logging onto the Federal Docket Management System (FDMS) Web site at *https://www.regulations.gov/.* Follow the online instructions for submitting comments.
- Comments may also be faxed to (202) 493–2251.

Comments must be written in the English language, and be no greater than

15 pages in length, although there is no limit to the length of necessary attachments to the comments. If comments are submitted in hard copy form, please ensure that two copies are provided. If you wish to receive confirmation that comments you have submitted by mail were received, please enclose a stamped, self-addressed postcard with the comments. Note that all comments received will be posted without change to *https://www.regulations.gov,* including any personal information provided.

The petition, supporting materials, and all comments received before the close of business on the closing date indicated above will be filed in the docket and will be considered. All comments and supporting materials received after the closing date will also be filed and will be considered to the extent possible.

When the petition is granted or denied, notice of the decision will also be published in the **Federal Register** pursuant to the authority indicated at the end of this notice.

All documents submitted to the docket may be viewed by anyone at the address and times given above. The documents may also be viewed on the Internet at *https://www.regulations.gov* by following the online instructions for accessing the dockets. The docket ID number for this petition is shown in the heading of this notice.

DOT's complete Privacy Act Statement is available for review in a **Federal Register** notice published on April 11, 2000, (65 FR 19477–78).

SUPPLEMENTARY INFORMATION:

I. *Overview:* Pursuant to 49 U.S.C. 30118(d) and 30120(h) and their implementing regulations at 49 CFR part 556, MBUSA submitted a petition for an exemption from the notification and remedy requirements of 49 U.S.C. Chapter 301 on the basis that this noncompliance is inconsequential as it relates to motor vehicle safety.

This notice of receipt of MBUSA's petition is published under 49 U.S.C. 30118 and 30120 and does not represent any agency decision or other exercise of judgement concerning the merits of the petition.

II. *Vehicles Involved:* Affected are 2,917 of the following MY 2016 Mercedes-Benz GL-Class multipurpose passenger vehicles manufactured between December 1, 2015, and February 5, 2016:

- GL 350 Bluetec 4Matic SUV (155 vehicles).
- GL 450 4Matic SUV (2,482 vehicles).
- GL 550 4Matic SUV (280 vehicles).

III. *Noncompliance:* MBUSA explains that the noncompliance is due to a labeling error. The subject vehicles are equipped with a spare tire, size T155/80 R19 114M; however, the tire information placard affixed to the vehicles' B-pillar incorrectly identifies the spare tire size as T165/90 R19 119M. The placard therefore does not comply with requirements specified in paragraph S4.3(d) of FMVSS No. 110.

IV. *Rule Text:* Paragraph S4.3 of FMVSS No. 110 states, in pertinent part:

S4.3 *Placard.* Each vehicle, except for a trailer or incomplete vehicle shall show the information specified in S4.3 (a) through (g), and may show, at the manufacturer's option, the information specified in S4.3 (h) through (i), on a placard permanently affixed to the driver's side B-pillar. In each vehicle without a driver's side B-pillar and two doors on the driver's side of the vehicle opening in the opposite directions, the placard shall be affixed on the forward edge of the rear side door . . .

(d) Tire size designation, indicated by the headings ''size'' or ''original tire size'' or ''original size,'' and ''spare tire'' or ''spare,'' for the tires installed at the time of the first purchase for purposes other than resale. For full size spare tires, the statement ''see above'' may, at the manufacturer's option replace the tire size designation. If no spare tire is provided, the word ''none'' must replace the tire size designation; . . .

V. *Summary of MBUSA's Petition:* MBUSA described the subject noncompliance and stated its belief that the noncompliance is inconsequential as it relates to motor vehicle safety.

In support of its petition, MBUSA stated the following:

(a) Both tire sizes can be used on the vehicle. The spare tire with the size of T165/90 R19 119M (the size stated on the B-pillar label) is equipped on older models produced before November 2015. The purpose of FMVSS No. 110 is to ''prevent tire overloading,'' *see* 40 CFR 571. S1, and no overloading will result from the incorrect label because either tire size (the one stated on the label or the one actually on the vehicle) can be used.

(b) The tire pressure is the same for both spare tire sizes. When checking the tire pressure for the spare tire, the customer will find the correct tire pressure values on the label. Again, no overloading will result from the incorrect label because the correct tire pressure values are provided.

(c) Information regarding the correct spare tire is available to the vehicle owner. The vehicles are equipped with an Operator's Manual which describes both spare tire sizes. Also, if a tire needs to be replaced on the spare wheel, the dealer Electronic Parts Catalogue (EPC) correctly specifies the proper tire part number. Additionally, further assistance regarding the correct spare tire can be provided by the customer assistance center.

(d) The presumption that the issue described above will have an inconsequential impact on safety is supported by field data: MBUSA is not aware of any customer complaints, accidents, or injuries alleged to have occurred as a result of this tire label discrepancy in the United States.

MBUSA concluded by expressing the belief that the subject noncompliance is inconsequential as it relates to motor vehicle safety, and that its petition to be exempted from providing notification of the noncompliance, as required by 49 U.S.C. 30118, and a remedy for the noncompliance, as required by 49 U.S.C. 30120, should be granted.

NHTSA notes that the statutory provisions (49 U.S.C. 30118(d) and 30120(h)) that permit manufacturers to file petitions for a determination of inconsequentiality allow NHTSA to exempt manufacturers only from the duties found in sections 30118 and 30120, respectively, to notify owners, purchasers, and dealers of a defect or noncompliance and to remedy the defect or noncompliance. Therefore, any decision on this petition only applies to the subject vehicles that MBUSA no longer controlled at the time it determined that the noncompliance existed. However, any decision on this petition does not relieve vehicle distributors and dealers of the prohibitions on the sale, offer for sale, or introduction or delivery for introduction into interstate commerce of the noncompliant vehicles under their control after MBUSA notified them that the subject noncompliance existed.

Authority: 49 U.S.C. 30118, 30120: delegations of authority at 49 CFR 1.95 and 501.8.

Jeffrey M. Giuseppe,

Director, Office of Vehicle Safety Compliance.

[FR Doc. 2016–27274 Filed 11–10–16; 8:45 am]

BILLING CODE 4910–59–P

DEPARTMENT OF TRANSPORTATION

Intelligent Transportation Systems Program Advisory Committee; Notice of Meeting

AGENCY: ITS Joint Program Office, Office of the Assistant Secretary for Research and Technology, U.S. Department of Transportation.

ACTION: Notice.

The Intelligent Transportation Systems (ITS) Program Advisory Committee (ITSPAC) will hold a meeting on December 7, 2016, from 8:30 a.m. to 4:00 p.m. (EST) in the Doubletree Crystal City Hotel, 300 Army Navy Drive, Arlington, VA 22202.

The ITSPAC, established under Section 5305 of Public Law 109–59, Safe, Accountable, Flexible, Efficient

Transportation Equity Act: A Legacy for Users, August 10, 2005, and re-established under Section 6007 of Public Law 114–94, Fixing America's Surface Transportation (FAST) Act, December 4, 2015, was created to advise the Secretary of Transportation on all matters relating to the study, development, and implementation of intelligent transportation systems. Through its sponsor, the ITS Joint Program Office (JPO), the ITSPAC makes recommendations to the Secretary regarding ITS Program needs, objectives, plans, approaches, content, and progress.

The following is a summary of the meeting tentative agenda: (1) Welcome, (2) Discussion of Potential Advice Memorandum Topics, (3) Summary and Adjourn.

The meeting will be open to the public, but limited space will be available on a first-come, first-served basis. Members of the public who wish to present oral statements at the meeting must submit a request to *ITSPAC@dot.gov,* not later than November 28, 2016.

Questions about the agenda or written comments may be submitted by U.S. Mail to: U.S. Department of Transportation, Office of the Assistant Secretary for Research and Technology, ITS Joint Program Office, Attention: Stephen Glasscock, 1200 New Jersey Avenue SE., HOIT, Washington, DC 20590 or faxed to (202) 493–2027. The ITS JPO requests that written comments be submitted not later than November 28, 2016.

Notice of this conference is provided in accordance with the Federal Advisory Committee Act and the General Services Administration regulations (41 CFR part 102–3) covering management of Federal advisory committees.

Issued in Washington, DC, on the 8th day of November 2016.

Stephen Glasscock,

Designated Federal Officer, ITS Joint Program Office.

[FR Doc. 2016–27277 Filed 11–10–16; 8:45 am]

BILLING CODE 4910–22–P

DEPARTMENT OF VETERANS AFFAIRS

[OMB Control No. 2900–0011]

Agency Information Collection: Activity: Under OMB Review (Application for Reinstatement—Insurance Lapsed More Than 6 Months and Application for Reinstatement—Non Medical Comparative Health Statement)

AGENCY: Veterans Benefits Administration, Department of Veterans Affairs.

ACTION: Notice.

SUMMARY: In compliance with the Paperwork Reduction Act (PRA) of 1995 (44 U.S.C. 3501–3521), this notice announces that the Veterans Benefits Administration (VBA), Department of Veterans Affairs, will submit the collection of information abstracted below to the Office of Management and Budget (OMB) for review and comment. The PRA submission describes the nature of the information collection and its expected cost and burden; it includes the actual data collection instrument.

DATES: Comments must be submitted on or before December 14, 2016.

ADDRESSES: Submit written comments on the collection of information through *www.Regulations.gov*, or to Office of Information and Regulatory Affairs, Office of Management and Budget, Attn: VA Desk Officer; 725 17th St. NW., Washington, DC 20503 or sent through electronic mail to *oira_submission@omb.eop.gov.* Please refer to ''OMB Control No. 2900–0011'' in any correspondence.

FOR FURTHER INFORMATION CONTACT: Cynthia Harvey-Pryor, Enterprise Records Service (005R1B), Department of Veterans Affairs, 810 Vermont Avenue NW., Washington, DC 20420, (202) 461–5870 or email *cynthia.harvey-pryor@va.gov.* Please refer to ''OMB Control No. 2900–0011.''

SUPPLEMENTARY INFORMATION:

Title: Application for Reinstatement—Insurance Lapsed More Than 6 Months (29–352) Application for Reinstatement—Non Medical Comparative Health Statement (29–353).

OMB Control Number: 2900–0011.

Type of Review: Revision of a currently approved collection.

Abstract: These forms are used by veterans who are requesting a reinstatement of their lapsed life insurance policies. The information requested on the forms is required by law, 38 U.S.C. Sections 6.79 and 8.22. An agency may not conduct or sponsor, and a person is not required to respond to a collection of information unless it displays a currently valid OMB control number. The **Federal Register** Notice with a 60-day comment period soliciting comments on this collection of information was published Thursday, September 1, 2016, 81, FR 60413.

Affected Public: Individuals or households.

Estimated Annual Burden: 1,125 hours.

Estimated Average Burden per Respondent: 22.5 minutes.

Frequency of Response: On occasion.

Estimated Number of Respondents: 3000.

By direction of the Secretary.

Cynthia Harvey-Pryor,

Program Specialist, Office of Privacy and Records Management, Department of Veterans Affairs.

[FR Doc. 2016–27260 Filed 11–10–16; 8:45 am]

BILLING CODE 8320–01–P

FEDERAL REGISTER

Vol. 81 Monday,

No. 219 November 14, 2016

Part II

Department of Health and Human Services

Centers for Medicare & Medicaid Services

42 CFR Parts 414, 416, 419, et al.

Medicare Program: Hospital Outpatient Prospective Payment and Ambulatory Surgical Center Payment Systems and Quality Reporting Programs; Organ Procurement Organization Reporting and Communication; Transplant Outcome Measures and Documentation Requirements; Electronic Health Record (EHR) Incentive Programs; Payment to Nonexcepted Off-Campus Provider-Based Department of a Hospital; Hospital Value-Based Purchasing (VBP) Program; Establishment of Payment Rates Under the Medicare Physician Fee Schedule for Nonexcepted Items and Services Furnished by an Off-Campus Provider-Based Department of a Hospital; Final Rule

DEPARTMENT OF HEALTH AND HUMAN SERVICES

Centers for Medicare & Medicaid Services

42 CFR Parts 414, 416, 419, 482, 486, 488, and 495

[CMS–1656–FC and IFC]

RIN 0938–AS82

Medicare Program: Hospital Outpatient Prospective Payment and Ambulatory Surgical Center Payment Systems and Quality Reporting Programs; Organ Procurement Organization Reporting and Communication; Transplant Outcome Measures and Documentation Requirements; Electronic Health Record (EHR) Incentive Programs; Payment to Nonexcepted Off-Campus Provider-Based Department of a Hospital; Hospital Value-Based Purchasing (VBP) Program; Establishment of Payment Rates Under the Medicare Physician Fee Schedule for Nonexcepted Items and Services Furnished by an Off-Campus Provider-Based Department of a Hospital

AGENCY: Centers for Medicare & Medicaid Services (CMS), HHS.

ACTION: Final rule with comment period and interim final rule with comment period.

SUMMARY: This final rule with comment period revises the Medicare hospital outpatient prospective payment system (OPPS) and the Medicare ambulatory surgical center (ASC) payment system for CY 2017 to implement applicable statutory requirements and changes arising from our continuing experience with these systems. In this final rule with comment period, we describe the changes to the amounts and factors used to determine the payment rates for Medicare services paid under the OPPS and those paid under the ASC payment system. In addition, this final rule with comment period updates and refines the requirements for the Hospital Outpatient Quality Reporting (OQR) Program and the ASC Quality Reporting (ASCQR) Program.

Further, in this final rule with comment period, we are making changes to tolerance thresholds for clinical outcomes for solid organ transplant programs; to Organ Procurement Organizations (OPOs) definitions, outcome measures, and organ transport documentation; and to the Medicare and Medicaid Electronic Health Record Incentive Programs. We also are removing the HCAHPS Pain Management dimension from the Hospital Value-Based Purchasing (VBP) Program.

In addition, we are implementing section 603 of the Bipartisan Budget Act of 2015 relating to payment for certain items and services furnished by certain off-campus provider-based departments of a provider. In this document, we also are issuing an interim final rule with comment period to establish the Medicare Physician Fee Schedule payment rates for the nonexcepted items and services billed by a nonexcepted off-campus provider-based department of a hospital in accordance with the provisions of section 603.

DATES: *Effective date:* This final rule with comment period and the interim final rule with comment period are effective on January 1, 2017.

Comment period: To be assured consideration, comments on: (1) The payment classifications assigned to new Level II HCPCS codes and recognition of new and revised Category I and III CPT codes in this final rule with comment period; (2) the 20-hour a week minimum requirement for partial hospitalization services in this final rule with comment period; (3) the potential limitation on clinical service line expansion or volume of services by nonexcepted off-campus PBDs in this final rule with comment period; and (4) the Medicare Physician Fee Schedule (MPFS) payment rates for nonexcepted items and services furnished and billed by nonexcepted off-campus provider-based departments of hospitals in the interim final rule with comment period must be received at one of the addresses provided in the **ADDRESSES** section no later than 5 p.m. EST on December 31, 2016.

ADDRESSES: In commenting, please refer to file code CMS–1656–FC when commenting on the issues in the final rule with comment period and CMS–1656–IFC when commenting on issues in the interim final rule with comment period. Because of staff and resource limitations, we cannot accept comments by facsimile (FAX) transmission.

You may submit comments in one of four ways (no duplicates, please):

1. *Electronically.* You may (and we encourage you to) submit electronic comments on this regulation to *http://www.regulations.gov*. Follow the instructions under the ''submit a comment'' tab.

2. *By regular mail.* You may mail written comments to the following address ONLY:

Centers for Medicare & Medicaid Services, Department of Health and Human Services, Attention: CMS–1656–FC or CMS–1656–IFC (as appropriate), P.O. Box 8013, Baltimore, MD 21244–1850.

Please allow sufficient time for mailed comments to be received before the close of the comment period.

3. *By express or overnight mail.* You may send written comments via express or overnight mail to the following address ONLY:

Centers for Medicare & Medicaid Services, Department of Health and Human Services, Attention: CMS–1656–FC or CMS–1656–IFC (as appropriate), Mail Stop C4–26–05, 7500 Security Boulevard, Baltimore, MD 21244–1850.

4. *By hand or courier.* If you prefer, you may deliver (by hand or courier) your written comments before the close of the comment period to either of the following addresses:

a. For delivery in Washington, DC—

Centers for Medicare & Medicaid Services, Department of Health and Human Services, Room 445–G, Hubert H. Humphrey Building, 200 Independence Avenue SW., Washington, DC 20201.

(Because access to the interior of the Hubert H. Humphrey Building is not readily available to persons without Federal Government identification, commenters are encouraged to leave their comments in the CMS drop slots located in the main lobby of the building. A stamp-in clock is available for persons wishing to retain a proof of filing by stamping in and retaining an extra copy of the comments being filed.)

b. For delivery in Baltimore, MD—

Centers for Medicare & Medicaid Services, Department of Health and Human Services, 7500 Security Boulevard, Baltimore, MD 21244–1850.

If you intend to deliver your comments to the Baltimore address, please call the telephone number (410) 786–7195 in advance to schedule your arrival with one of our staff members.

Comments mailed to the addresses indicated as appropriate for hand or courier delivery may be delayed and received after the comment period.

For information on viewing public comments, we refer readers to the beginning of the **SUPPLEMENTARY INFORMATION** section.

FOR FURTHER INFORMATION CONTACT:

Advisory Panel on Hospital Outpatient Payment (HOP Panel), contact Katherine Eastridge at (410) 786–4474.

Ambulatory Surgical Center (ASC) Payment System, contact Elisabeth Daniel at (410) 786–0237.

Ambulatory Surgical Center Quality Reporting (ASCQR) Program Administration, Validation, and Reconsideration Issues, contact Anita Bhatia at (410) 786–7236.

Ambulatory Surgical Center Quality Reporting (ASCQR) Program Measures, contact Vinitha Meyyur at (410) 786–8819.

Blood and Blood Products, contact Lela Strong at (410) 786–3213.

Cancer Hospital Payments, contact David Rice at (410) 786–6004.

Chronic Care Management (CCM) Hospital Services, contact Twi Jackson at (410) 786–1159.

CPT and Level II Alphanumeric HCPCS Codes—Process for Requesting Comments, contact Marjorie Baldo at (410) 786–4617.

CMS Web Posting of the OPPS and ASC Payment Files, contact Chuck Braver at (410) 786–9379.

Composite APCs (Low Dose Brachytherapy and Multiple Imaging), contact Twi Jackson at (410) 786–1159.

Comprehensive APCs, contact Lela Strong at (410) 786–3213.

Hospital Observation Services, contact Twi Jackson at (410) 786–1159.

Hospital Outpatient Quality Reporting (OQR) Program Administration, Validation, and Reconsideration Issues, contact Elizabeth Bainger at (410) 786–0529.

Hospital Outpatient Quality Reporting (OQR) Program Measures, contact Vinitha Meyyur at (410) 786–8819.

Hospital Outpatient Visits (Emergency Department Visits and Critical Care Visits), contact Twi Jackson at (410) 786–1159.

Hospital Value-Based Purchasing (VBP) Program, contact Grace Im at (410) 786–0700.

Inpatient Only Procedures List, contact Lela Strong at (410) 786–3213.

Medicare Electronic Health Record (EHR) Incentive Program, contact Kathleen Johnson at (410) 786–3295 or Steven Johnson at (410) 786–3332.

New Technology Intraocular Lenses (NTIOLs), contact Elisabeth Daniel at (410) 786–0237.

No Cost/Full Credit and Partial Credit Devices, contact Twi Jackson at (410) 786–1159.

OPPS Brachytherapy, contact Elisabeth Daniel at (410) 786–0237.

OPPS Data (APC Weights, Conversion Factor, Copayments, Cost-to-Charge Ratios (CCRs), Data Claims, Geometric Mean Calculation, Outlier Payments, and Wage Index), contact David Rice at (410) 786–6004.

OPPS Drugs, Radiopharmaceuticals, Biologicals, and Biosimilar Products, contact Twi Jackson at (410) 786–1159.

OPPS Exceptions to the 2 Times Rule, contact Marjorie Baldo at (410) 786–4617.

OPPS Packaged Items/Services, contact Lela Strong at (410) 786–3213.

OPPS Pass-Through Devices and New Technology Procedures/Services, contact Lela Strong at (410) 786–3213.

OPPS Status Indicators (SI) and Comment Indicators (CI), contact Marina Kushnirova at (410) 786–2682.

Organ Procurement Organization (OPO) Reporting and Communication, contact Peggye Wilkerson at (410) 786–4857 or Melissa Rice at (410) 786–3270.

Partial Hospitalization Program (PHP) and Community Mental Health Center (CMHC) Issues, contact Marissa Kellam at (410) 786–3012 or Katherine Lucas at (410) 786–7723.

Rural Hospital Payments, contact David Rice at (410) 786–6004.

Section 603 of the Bipartisan Budget Act of 2015—Items and Services Furnished by Off-Campus Departments of a Provider, contact David Rice at (410) 786–6004 or Elisabeth Daniel at (410) 786–0237.

Section 603 of the Bipartisan Budget Act of 2015—MPFS Payment Rates for Nonexcepted Off-Campus Provider-Based Departments of Hospitals, contact Geri Mondowney at (410) 786–1172, Patrick Sartini at (410) 786–9252, or Isadora Gil at (410) 786–4532.

Transplant Enforcement, contact Paula DiStabile at (410) 786–3039 or Caecilia Blondiaux at (410) 786–2190.

All Other Issues Related to Hospital Outpatient and Ambulatory Surgical Center Payments Not Previously Identified, contact Lela Strong at (410) 786–3213.

SUPPLEMENTARY INFORMATION:

Inspection of Public Comments: All comments received before the close of the comment period are available for viewing by the public, including any personally identifiable or confidential business information that is included in a comment. We post all comments received before the close of the comment period on the following Web site as soon as possible after they have been received: *http://www.regulations.gov/*. Follow the search instructions on that Web site to view public comments.

Comments received timely will also be available for public inspection, generally beginning approximately 3 weeks after publication of the rule, at the headquarters of the Centers for Medicare & Medicaid Services, 7500 Security Boulevard, Baltimore, MD 21244, on Monday through Friday of each week from 8:30 a.m. to 4:00 p.m. EST. To schedule an appointment to view public comments, phone 1–800–743–3951.

Electronic Access

This **Federal Register** document is also available from the **Federal Register** online database through *Federal Digital System (FDsys),* a service of the U.S. Government Printing Office. This database can be accessed via the internet at *https://www.gpo.gov/fdsys/.*

Addenda Available Only Through the Internet on the CMS Web Site

In the past, a majority of the Addenda referred to in our OPPS/ASC proposed and final rules were published in the **Federal Register** as part of the annual rulemakings. However, beginning with the CY 2012 OPPS/ASC proposed rule, all of the Addenda no longer appear in the **Federal Register** as part of the annual OPPS/ASC proposed and final rules to decrease administrative burden and reduce costs associated with publishing lengthy tables. Instead, these Addenda are published and available only on the CMS Web site. The Addenda relating to the OPPS are available at: *https://www.cms.gov/Medicare/Medicare-Fee-for-Service-Payment/HospitalOutpatientPPS/index.html.* The Addenda relating to the ASC payment system are available at: *https://www.cms.gov/Medicare/Medicare-Fee-for-Service-Payment/HospitalOutpatientPPS/index.html.*

Alphabetical List of Acronyms Appearing in This Federal Register Document

ACOT Advisory Committee on Organ Transplantation
AHA American Hospital Association
AMA American Medical Association
AMI Acute myocardial infarction
APC Ambulatory Payment Classification
API Application programming interface
APU Annual payment update
ASC Ambulatory surgical center
ASCQR Ambulatory Surgical Center Quality Reporting
ASP Average sales price
AUC Appropriate use criteria
AWP Average wholesale price
BBA Balanced Budget Act of 1997, Public Law 105–33
BBRA Medicare, Medicaid, and SCHIP [State Children's Health Insurance Program] Balanced Budget Refinement Act of 1999, Public Law 106–113
BIPA Medicare, Medicaid, and SCHIP Benefits Improvement and Protection Act of 2000, Public Law 106–554
BLS Bureau of Labor Statistics
CAH Critical access hospital
CAHPS Consumer Assessment of Healthcare Providers and Systems
CAP Competitive Acquisition Program
C–APC Comprehensive Ambulatory Payment Classification

CASPER Certification and Survey Provider Enhanced Reporting
CAUTI Catheter-associated urinary tract infection
CBSA Core-Based Statistical Area
CCM Chronic care management
CCN CMS Certification Number
CCR Cost-to-charge ratio
CDC Centers for Disease Control and Prevention
CED Coverage with Evidence Development
CERT Comprehensive Error Rate Testing
CfC Conditions of coverage
CFR Code of Federal Regulations
CI Comment indicator
CLABSI Central Line [Catheter] Associated Blood Stream Infection
CLFS Clinical Laboratory Fee Schedule
CMHC Community mental health center
CMS Centers for Medicare & Medicaid Services
CoP Condition of participation
CPI–U Consumer Price Index for All Urban Consumers
CPT Current Procedural Terminology (copyrighted by the American Medical Association)
CR Change request
CRC Colorectal cancer
CSAC Consensus Standards Approval Committee
CT Computed tomography
CV Coefficient of variation
CY Calendar year
DFO Designated Federal Official
DIR Direct or indirect remuneration
DME Durable medical equipment
DMEPOS Durable Medical Equipment, Prosthetic, Orthotics, and Supplies
DRA Deficit Reduction Act of 2005, Public Law 109–171
DSH Disproportionate share hospital
EACH Essential access community hospital
EAM Extended assessment and management
ECD Expanded criteria donor
EBRT External beam radiotherapy
ECG Electrocardiogram
ED Emergency department
EDTC Emergency department transfer communication
EHR Electronic health record
E/M Evaluation and management
ESRD End-stage renal disease
ESRD QIP End-Stage Renal Disease Quality Improvement Program
FACA Federal Advisory Committee Act, Public Law 92–463
FDA Food and Drug Administration
FFS [Medicare] Fee-for-service
FTE Full-time equivalent
FY Fiscal year
GAO Government Accountability Office
GI Gastrointestinal
GME Graduate medical education
HAI Healthcare-associated infection
HCAHPS Hospital Consumer Assessment of Healthcare Providers and Systems
HCERA Health Care and Education Reconciliation Act of 2010, Public Law 111–152
HCP Health care personnel
HCPCS Healthcare Common Procedure Coding System
HCRIS Healthcare Cost Report Information System
HCUP Healthcare Cost and Utilization Project
HEU Highly enriched uranium
HH QRP Home Health Quality Reporting Program
HHS Department of Health and Human Services
HIE Health information exchange
HIPAA Health Insurance Portability and Accountability Act of 1996, Public Law 104–191
HOP Hospital Outpatient Payment [Panel]
HOPD Hospital outpatient department
HOP QDRP Hospital Outpatient Quality Data Reporting Program
HPMS Health Plan Management System
IBD Inflammatory bowel disease
ICC Interclass correlation coefficient
ICD Implantable cardioverter defibrillator
ICD–9–CM International Classification of Diseases, Ninth Revision, Clinical Modification
ICD–10 International Classification of Diseases, Tenth Revision
ICH In-center hemodialysis
ICR Information collection requirement
IME Indirect medical education
IDTF Independent diagnostic testing facility
IGI IHS Global Insight, Inc.
IHS Indian Health Service
I/OCE Integrated Outpatient Code Editor
IOL Intraocular lens
IORT Intraoperative radiation treatment
IPFQR Inpatient Psychiatric Facility Quality Reporting
IPPS [Hospital] Inpatient Prospective Payment System
IQR [Hospital] Inpatient Quality Reporting
IRF Inpatient rehabilitation facility
IRF QRP Inpatient Rehabilitation Facility Quality Reporting Program
IT Information technology
LCD Local coverage determination
LDR Low dose rate
LTCH Long-term care hospital
LTCHQR Long-Term Care Hospital Quality Reporting
MAC Medicare Administrative Contractor
MACRA Medicare Access and CHIP Reauthorization Act of 2015, Public Law 114–10
MAP Measure Application Partnership
MDH Medicare-dependent, small rural hospital
MedPAC Medicare Payment Advisory Commission
MEG Magnetoencephalography
MFP Multifactor productivity
MGCRB Medicare Geographic Classification Review Board
MIEA–TRHCA Medicare Improvements and Extension Act under Division B, Title I of the Tax Relief Health Care Act of 2006, Public Law 109–432
MIPPA Medicare Improvements for Patients and Providers Act of 2008, Public Law 110–275
MLR Medical loss ratio
MMA Medicare Prescription Drug, Improvement, and Modernization Act of 2003, Public Law 108–173
MMEA Medicare and Medicaid Extenders Act of 2010, Public Law 111–309
MMSEA Medicare, Medicaid, and SCHIP Extension Act of 2007, Public Law 110–173
MPFS Medicare Physician Fee Schedule
MR Medical review
MRA Magnetic resonance angiography
MRgFUS Magnetic Resonance Image Guided Focused Ultrasound
MRI Magnetic resonance imaging
MRSA Methicillin-Resistant Staphylococcus Aures
MS–DRG Medicare severity diagnosis-related group
MSIS Medicaid Statistical Information System
MUC Measure under consideration
NCCI National Correct Coding Initiative
NEMA National Electrical Manufacturers Association
NHSN National Healthcare Safety Network
NOTA National Organ and Transplantation Act
NOS Not otherwise specified
NPI National Provider Identifier
NPWT Negative Pressure Wound Therapy
NQF National Quality Forum
NQS National Quality Strategy
NTIOL New technology intraocular lens
NUBC National Uniform Billing Committee
OACT [CMS] Office of the Actuary
OBRA Omnibus Budget Reconciliation Act of 1996, Public Law 99–509
O/E Observed to expected event
OIG [HHS] Office of the Inspector General
OMB Office of Management and Budget
ONC Office of the National Coordinator for Health Information Technology
OPD [Hospital] Outpatient Department
OPO Organ Procurement Organization
OPPS [Hospital] Outpatient Prospective Payment System
OPSF Outpatient Provider-Specific File
OPTN Organ Procurement and Transplantation Network
OQR [Hospital] Outpatient Quality Reporting
OT Occupational therapy
PAMA Protecting Access to Medicare Act of 2014, Public Law 113–93
PBD Provider-based department
PCHQR PPS-Exempt Cancer Hospital Quality Reporting
PCR Payment-to-cost ratio
PDC Per day cost
PDE Prescription Drug Event
PE Practice expense
PEPPER Program Evaluation Payment Patterns Electronic Report
PHP Partial hospitalization program
PHSA Public Health Service Act, Public Law 96–88
PN Pneumonia
POS Place of service
PPI Producer Price Index
PPS Prospective payment system
PQRI Physician Quality Reporting Initiative
PQRS Physician Quality Reporting System
QDC Quality data code
QIO Quality Improvement Organization
RFA Regulatory Flexibility Act
RHQDAPU Reporting Hospital Quality Data for Annual Payment Update
RTI Research Triangle Institute, International
RVU Relative value unit
SAD Self-administered drug
SAMS Secure Access Management Services
SCH Sole community hospital
SCOD Specified covered outpatient drugs
SES Socioeconomic status

SI Status indicator
SIA Systems Improvement Agreement
SIR Standardized infection ratio
SNF Skilled nursing facility
SRS Stereotactic radiosurgery
SRTR Scientific Registry of Transplant Recipients
SSA Social Security Administration
SSI Surgical site infection
TEP Technical Expert Panel
TIP Transprostatic implant procedure
TOPs Transitional Outpatient Payments
USPSTF United States Preventive Services Task Force
VBP Value-based purchasing
WAC Wholesale acquisition cost

Table of Contents

I. Summary and Background
A. Executive Summary of This Document
1. Purpose
2. Summary of the Major Provisions
3. Summary of Costs and Benefits
B. Legislative and Regulatory Authority for the Hospital OPPS
C. Excluded OPPS Services and Hospitals
D. Prior Rulemaking
E. Advisory Panel on Hospital Outpatient Payment (the HOP Panel or the Panel)
1. Authority of the Panel
2. Establishment of the Panel
3. Panel Meetings and Organizational Structure
F. Public Comments Received in Response to CY 2016 OPPS/ASC Final Rule With Comment Period
II. Updates Affecting OPPS Payments
A. Recalibration of APC Relative Payment Weights
1. Database Construction
a. Database Source and Methodology
b. Calculation and Use of Cost-to-Charge Ratios (CCRs)
2. Data Development Process and Calculation of Costs Used for Ratesetting
a. Recommendations of the Advisory Panel on Hospital Outpatient Payment (the Panel) Regarding Data Development
b. Calculation of Single Procedure APC Criteria-Based Costs
(1) Blood and Blood Products
(a) Methodology
(b) Solicitation of Public Comments
(c) Rapid Bacterial Testing for Platelets
(2) Brachytherapy Sources
c. Comprehensive APCs (C–APCs) for CY 2017
(1) Background
(2) C–APCs for CY 2017
(a) Additional C–APCs for CY 2017
(b) New Allogeneic Hematopoietic Stem Cell Transplantation (HSCT) C–APC
d. Calculation of Composite APC Criteria-Based Costs
(1) Low Dose Rate (LDR) Prostate Brachytherapy Composite APC
(2) Mental Health Services Composite APC
(3) Multiple Imaging Composite APCs (APCs 8004, 8005, 8006, 8007, and 8008)
3. Changes to Packaged Items and Services
a. Background and Rationale for Packaging in the OPPS
b. Clinical Diagnostic Laboratory Test Packaging Policy
(1) Background
(2) ''Unrelated'' Laboratory Test Exception
(3) Molecular Pathology Test Exception
c. Conditional Packaging Status Indicators ''Q1'' and ''Q2''
(1) Background
(2) Change in Conditional Packaging Status Indicators Logic
4. Calculation of OPPS Scaled Payment Weights
B. Conversion Factor Update
C. Wage Index Changes
D. Statewide Average Default CCRs
E. Adjustment for Rural SCHs and EACHs Under Section 1833(t)(13)(B) of the Act
1. Background
2. Proposed and Finalized Policy for CY 2017
F. OPPS Payment to Certain Cancer Hospitals Described by Section 1886(d)(1)(B)(v) of the Act
1. Background
2. Payment Adjustment for Certain Cancer Hospitals for CY 2017
G. Hospital Outpatient Outlier Payments
1. Background
2. Outlier Calculation
H. Calculation of an Adjusted Medicare Payment From the National Unadjusted Medicare Payment
I. Beneficiary Copayments
1. Background
2. OPPS Copayment Policy
3. Calculation of an Adjusted Copayment Amount for an APC Group
III. OPPS Ambulatory Payment Classification (APC) Group Policies
A. OPPS Treatment of New CPT and Level II HCPCS Codes
1. Treatment of New Level II HCPCS Codes Effective April 1, 2016 for Which We Solicited Public Comments in the CY 2017 OPPS/ASC Proposed Rule
2. Treatment of New CPT and Level II HCPCS Codes Effective July 1, 2016 for Which We Solicited Public Comments in the CY 2017 OPPS/ASC Proposed Rule
3. Process for New Level II HCPCS Codes That Became Effective October 1, 2016 and New Level II HCPCS Codes That Will Be Effective January 1, 2017 for Which Are Soliciting Public Comments in This CY 2017 OPPS/ASC Final Rule With Comment Period
4. Treatment of New and Revised CY 2017 Category I and III CPT Codes That Will Be Effective January 1, 2017 for Which We Solicited Public Comments in the CY 2017 OPPS/ASC Proposed Rule
B. OPPS Changes—Variations Within APCs
1. Background
2. Application of the 2 Times Rule
3. APC Exceptions to the 2 Times Rule
C. New Technology APCs
1. Background
2. Additional New Technology APC Groups
3. Procedures Assigned to New Technology APC Groups for CY 2017
a. Overall Proposal
b. Retinal Prosthesis Implant Procedure
D. OPPS APC-Specific Policies
1. Cardiovascular Procedures and Services
a. Cardiac Event Recorder (APC 5071)
b. Cardiac Telemetry
2. Eye-Related Services
3. Gastrointestinal Procedures and Services
a. Esophageal Sphincter Augmentation (APC 5362)
b. Esophagogastroduodenoscopy: Transmural Drainage of Pseudocyst (APC 5303)
4. Musculoskeletal Procedures/Services
a. Auditory Osseointegrated Implants/Bone Anchored Hearing Systems (APCs 5114, 5115, 1nd 5116)
b. Bunion Correction/Foot Fusion (APC 5114)
c. Intervertebral Biomechanical Devices
d. Percutaneous Vertebral Augmentation/Kyphoplasty (APC 5114)
e. Strapping and Casting Applications (APCs 5101 and 5102)
5. Nervous System Procedures/Services
a. Transcranial Magnetic Stimulation Therapy (TMS) (APCs 5721 and 5722)
b. Percutaneous Epidural Adhesiolysis (APC 5443)
c. Neurostimulator (APC 5463)
6. Radiologic Procedures and Services
a. Imaging APCs
b. Radiation Oncology (APCs 5092, 5611, and 5627)
7. Skin Substitutes (APCs 5053 Through 5055)
8. Urology System Procedures and Services
a. Chemodenervation of the Bladder (APC 5373)
b. Temporary Prostatic Urethral Stent (APC 5372)
c. Transprostatic Urethral Implant Procedure (TUIP) (APCs 5375 and 5376)
9. Other Procedures and Services
a. Cryoablation Procedures (APCs 5114, 5361, 5362, and 5432)
b. Comprehensive Dialysis Circuit Procedures (APCs 5181, 5192, and 5193)
c. Blood Product Exchange and Related Services (APCs 5241 and 5242)
d. Magnetic Resonance-Guided Focused Ultrasound Surgery (MRgFUS) (APCs 1537, 5114, and 5414)
e. Neulasta® On-Body Injector
f. Smoking and Tobacco Use Cessation Counseling (APC 5821)
g. Radiofrequency Ablation of Uterine Fibroids (APC 5362)
h. Intrapulmonary Surfactant Administration (APC 5791)
i. Non-Contact Low Frequency Ultrasound (NLFU) Therapy (APC 5051)
j. Pulmonary Rehabilitation Services
IV. OPPS Payment for Devices
A. Pass-Through Payments for Devices
1. Expiration of Transitional Pass-Through for Certain Devices
a. Background
b. CY 2017 Pass-Through Devices
2. New Device Pass-Through Applications
a. Background
b. Applications Received for Device Pass-Through Payment for CY 2017
(1) BioBag® (Larval Debridement Therapy in a Contained Dressing)
(2) ENCORE™ Suspension System
(3) Endophys Pressure Sensing System (Endophys PSS) or Endophys Pressure Sensing Kit
3. Beginning Eligibility Date for Device Pass-Through Payment Status
4. Policy To Make the Transitional Pass-Through Payment Period 3 Years for All Pass-Through Devices and Expire Pass-Through Status on a Quarterly Rather Than Annual Basis

a. Background
b. CY 2017 Policy
5. Changes to Cost-to-Charge Ratios (CCRs) That Are Used To Determine Device Pass-Through Payment
a. Background
b. CY 2017 Policy
6. Provisions for Reducing Transitional Pass-Through Payments To Offset Costs Packaged Into APC Groups
a. Background
b. CY 2017 Policy
B. Device-Intensive Procedures
1. Background
2. HCPCS Code-Level Device-Intensive Determination
3. Changes to the Device Edit Policy
4. Adjustment to OPPS Payment for No Cost/Full Credit and Partial Credit Devices
a. Background
b. Policy for CY 2017
5. Payment Policy for Low-Volume Device-Intensive Procedures
V. OPPS Payment Changes for Drugs, Biologicals, and Radiopharmaceuticals
A. OPPS Transitional Pass-Through Payment for Additional Costs of Drugs, Biologicals, and Radiopharmaceuticals
1. Background
2. Policy To Make the Transitional Pass-Through Payment Period 3 Years for All Pass-Through Drugs, Biologicals, and Radiopharmaceuticals and Expire Pass-Through Status on a Quarterly Rather Than Annual Basis
3. Drugs and Biologicals With Expiring Pass-Through Payment Status in CY 2016
4. Drugs, Biologicals, and Radiopharmaceuticals With New or Continuing Pass-Through Status in CY 2017
5. Provisions for Reducing Transitional Pass-Through Payments for Policy-Packaged Drugs, Biologicals, and Radiopharmaceuticals To Offset Costs Packaged Into APC Groups
B. OPPS Payment for Drugs, Biologicals, and Radiopharmaceuticals Without Pass-Through Payment Status
1. Criteria for Packaging Payment for Drugs, Biologicals, and Radiopharmaceuticals
a. Packaging Threshold
b. Packaging of Payment for HCPCS Codes That Describe Certain Drugs, Certain Biologicals, and Therapeutic Radiopharmaceuticals Under the Cost Threshold (''Threshold-Packaged Policy'')
c. Policy Packaged Drugs, Biologicals, and Radiopharmaceuticals
d. High Cost/Low Cost Threshold for Packaged Skin Substitutes
e. Packaging Determination for HCPCS Codes That Describe the Same Drug or Biological But Different Dosages
2. Payment for Drugs and Biologicals Without Pass-Through Status That Are Not Packaged
a. Payment for Specified Covered Outpatient Drugs (SCODs) and Other Separately Payable and Packaged Drugs and Biologicals
b. CY 2017 Payment Policy
c. Biosimilar Biological Products
3. Payment Policy for Therapeutic Radiopharmaceuticals
4. Payment Adjustment Policy for Radioisotopes Derived From Non-Highly Enriched Uranium Sources
5. Payment for Blood Clotting Factors
6. Payment for Nonpass-Through Drugs, Biologicals, and Radiopharmaceuticals With HCPCS Codes But Without OPPS Hospital Claims Data
VI. Estimate of OPPS Transitional Pass-Through Spending for Drugs, Biologicals, Radiopharmaceuticals, and Devices
A. Background
B. Estimate of Pass-Through Spending
VII. OPPS Payment for Hospital Outpatient Visits and Critical Care Services
VIII. Payment for Partial Hospitalization Services
A. Background
B. PHP APC Update for CY 2017
1. PHP APC Changes and Effects on Geometric Mean Per Diem Costs
a. Changes to PHP APCs
b. Rationale for Changes in PHP APCs
c. Alternatives Considered
2. Development of the PHP APC Geometric Mean Per Diem Costs and Payment Rates
a. CMHC Data Preparation: Data Trims, Exclusions, and CCR Adjustments
b. Hospital-Based PHP Data Preparation: Data Trims and Exclusions
3. PHP Ratesetting Process
C. Outlier Policy for CMHCs
1. Estimated Outlier Threshold
2. CMHC Outlier Cap
a. Summary of Proposal
b. CY 2017 Final Rule Update and Policy
3. Implementation Strategy for the 8-Percent Cap on CMHC Outlier Payments
4. Summary of Policies
IX. Procedures That Will Be Paid Only as Inpatient Procedures
A. Background
B. Changes to the Inpatient Only (IPO) List
C. Response to Solicitation of Public Comments on the Possible Removal of Total Knee Arthroplasty (TKA) Procedures From the IPO List
1. Background
2. Discussion of TKA and the IPO List
3. Topics and Questions for Public Comment
X. Nonrecurring Policy Changes
A. Implementation of Section 603 of the Bipartisan Budget Act of 2015 Relating to Payment for Certain Items and Services Furnished by Off-Campus Provider-Based Departments of a Hospital
1. Background
2. Defining Applicable Items and Services and Off-Campus Outpatient Department of a Provider as Set Forth in Sections 1833(t)(21)(A) and (B) of the Act
a. Background on the Provider-Based Status Rules
b. Exemption of Items and Services Furnished in a Dedicated Emergency Department or an On-Campus PBD as Defined at Sections 1833(t)(21)(B)(i)(I) and (II) of the Act (Excepted Off-Campus PBD)
(1) Dedicated Emergency Departments (EDs)
(2) On-Campus Locations
(3) Within the Distance From Remote Locations
c. Applicability of Exception at Section 1833(t)(21)(B)(ii) of the Act
(1) Relocation of Off-Campus PBDs Excepted Under Section 1833(t)(21)(B)(ii) of the Act
(2) Expansion of Clinical Family of Services at an Off-Campus PBD Excepted Under Section 1833(t)(21)(B)(ii) of the Act
d. Change of Ownership and Excepted Status
e. Public Comments Received in Response to Solicitation on Data Collection Under Section 1833(t)(21)(D) of the Act
3. Payment for Items and Services Furnished in Off-Campus PBDs to Which Sections 1833(t)(1)(B)(v) and 1833(t)(21) of the Act Apply (Nonexcepted Items and Services Furnished by Nonexcepted Off-Campus PBDs)
a. Background on Medicare Payment for Services Furnished in an Off-Campus PBD
b. Payment for Items and Services Furnished in Off-Campus PBD That Are Subject to Sections 1833(t)(1)(B)(v) and (t)(21)(C) of the Act
(1) Definition of ''Applicable Payment System'' for Nonexcepted Items and Services
(2) Definition of Applicable Items and Services and Section 603 Amendments to Section 1833(t)(1)(B) of the Act and Payment for Nonexcepted Items and Services for CY 2017
(3) Public Comments Received in Response to Solicitation on Allowing Direct Billing and Payment for Nonexcepted Items and Services in CY 2018
4. Beneficiary Cost-Sharing
5. Summary of Proposals
6. Final Changes to Regulations
B. Interim Final Rule With Comment Period: Establishment of Payment Rates Under the Medicare Physician Fee Schedule for Nonexcepted Items and Services Furnished by an Off-Campus Provider-Based Department of a Hospital
1. Background
2. Payment Mechanisms
a. Relevance of the MPFS for Payment for Nonexcepted Items and Services
b. Operational Considerations
c. General MPFS Coding and Billing Mechanisms
3. Establishment of Payment Rates
a. Methodology
b. MPFS Relativity Adjuster
c. Geographic Adjustments
d. Coding Consistency
4. OPPS Payment Adjustments
5. Partial Hospitalization Services
6. Supervision Rules
7. Beneficiary Cost-Sharing
8. CY 2018, CY 2019, and Future Years
9. Waiver of Proposed Rulemaking
10. Collection of Information Requirements
11. Response to Comments
12. Regulatory Impact Statement
C. Changes for Payment for Film X-Ray
D. Changes to Certain Scope of Service Elements for Chronic Care Management (CCM) Services

E. Appropriate Use Criteria for Advanced Diagnostic Imaging Services
XI. CY 2017 OPPS Payment Status and Comment Indicators
A. CY 2017 OPPS Payment Status Indicator Definitions
B. CY 2017 Comment Indicator Definitions
XII. Updates to the Ambulatory Surgical Center (ASC) Payment System
A. Background
1. Legislative History, Statutory Authority, and Prior Rulemaking for the ASC Payment System
2. Policies Governing Changes to the Lists of Codes and Payment Rates for ASC Covered Surgical Procedures and Covered Ancillary Services
B. Treatment of New and Revised Codes
1. Background on Current Process for Recognizing New and Revised Category I and Category III CPT Codes and Level II HCPCS Codes
2. Treatment of New and Revised Level II HCPCS Codes and Category III CPT Codes Implemented in April 2016 and July 2016 for Which We Solicited Public Comments in the CY 2017 OPPS/ASC Proposed Rule
3. Process for Recognizing New and Revised Category I and Category III CPT Codes That Will Be Effective January 1, 2017 for Which We Are Responding to Public Comments in This CY 2017 OPPS/ASC Final Rule With Comment Period
4. Process for New and Revised Level II HCPCS Codes That Will Be Effective October 1, 2016 and January 1, 2017 for Which We Are Soliciting Public Comments in This CY 2017 OPPS/ASC Final Rule with Comment Period
C. Update to the List of ASC Covered Surgical Procedures and Covered Ancillary Services
1. Covered Surgical Procedures
a. Covered Surgical Procedures Designated as Office-Based
(1) Background
(2) Changes for CY 2017 to Covered Surgical Procedures Designated as Office-Based
b. ASC Covered Surgical Procedures Designated as Device-Intensive—Finalized Policy for CY 2016 and Final Policy for CY 2017
(1) Background
(2) ASC Device-Intensive Designation by HCPCS Code
(3) Changes to List of ASC Covered Surgical Procedures Designated as Device-Intensive for CY 2017
c. Adjustment to ASC Payments for No Cost/Full Credit and Partial Credit Devices
d. Additions to the List of ASC Covered Surgical Procedures
2. Covered Ancillary Services
D. ASC Payment for Covered Surgical Procedures and Covered Ancillary Services
1. ASC Payment for Covered Surgical Procedures
a. Background
b. Update to ASC Covered Surgical Procedure Payment Rates for CY 2017
2. Payment for Covered Ancillary Services
a. Background
b. Payment for Covered Ancillary Services for CY 2017
E. New Technology Intraocular Lenses (NTIOLs)
1. NTIOL Application Cycle
2. Requests To Establish New NTIOL Classes for CY 2017
3. Payment Adjustment
F. ASC Payment and Comment Indicators
1. Background
2. ASC Payment and Comment Indicators
G. Calculation of the ASC Conversion Factor and the ASC Payment Rates
1. Background
2. Calculation of the ASC Payment Rates
a. Updating the ASC Relative Payment Weights for CY 2017 and Future Years
b. Updating the ASC Conversion Factor
3. Display of CY 2017 ASC Payment Rates
XIII. Requirements for the Hospital Outpatient Quality Reporting (OQR) Program
A. Background
1. Overview
2. Statutory History of the Hospital OQR Program
B. Hospital OQR Program Quality Measures
1. Considerations in the Selection of Hospital OQR Program Quality Measures
2. Retention of Hospital OQR Program Measures Adopted in Previous Payment Determinations
3. Removal of Quality Measures From the Hospital OQR Program Measure Set
a. Considerations in Removing Quality Measures From the Hospital OQR Program
b. Criteria for Removal of ''Topped-Out'' Measures
4. Hospital OQR Program Quality Measures Adopted in Previous Rulemaking
5. New Hospital OQR Program Quality Measures for the CY 2020 Payment Determinations and Subsequent Years
a. OP–35: Admissions and Emergency Department (ED) Visits for Patients Receiving Outpatient Chemotherapy Measure
(1) Background
(2) Overview of Measure
(3) Data Sources
(4) Measure Calculation
(5) Cohort
(6) Risk Adjustment
b. OP–36: Hospital Visits After Hospital Outpatient Surgery Measure (NQF #2687)
(1) Background
(2) Overview of Measure
(3) Data Sources
(4) Measure Calculation
(5) Cohort
(6) Risk Adjustment
c. OP–37a–e: Outpatient and Ambulatory Surgery Consumer Assessment of Healthcare Providers and Systems (OAS CAHPS) Survey Measures
(1) Background
(2) Overview of Measures
(3) Data Sources
(4) Measure Calculations
(5) Cohort
(6) Exemption
(7) Risk Adjustment
(8) Public Reporting
d. Summary of Previously Adopted and Newly Adopted Hospital OQR Program Measures for the CY 2020 Payment Determinations and Subsequent Years
6. Hospital OQR Program Measures and Topics for Future Consideration
a. Future Measure Topics
b. Electronic Clinical Quality Measures
c. Possible Future eCQM: Safe Use of Opioids-Concurrent Prescribing
7. Maintenance of Technical Specifications for Quality Measures
8. Public Display of Quality Measures
C. Administrative Requirements
1. QualityNet Account and Security Administrator
2. Requirements Regarding Participation Status
D. Form, Manner, and Timing of Data Submitted for the Hospital OQR Program
1. Hospital OQR Program Annual Payment Determinations
2. Requirements for Chart-Abstracted Measures Where Patient-Level Data Are Submitted Directly to CMS for the CY 2019 Payment Determination and Subsequent Years
3. Claims-Based Measure Data Requirements for the CY 2019 Payment Determination and Subsequent Years and CY 2020 Payment Determination and Subsequent Years
4. Data Submission Requirements for the OP–37a–e: Outpatient and Ambulatory Surgery Consumer Assessment of Healthcare Providers and Systems (OAS CAHPS) Survey-Based Measures for the CY 2020 Payment Determination and Subsequent Years
a. Survey Requirements
b. Vendor Requirements
5. Data Submission Requirements for Previously Finalized Measures for Data Submitted via a Web-Based Tool for the CY 2019 Payment Determination and Subsequent Years
6. Population and Sampling Data Requirements for the CY 2019 Payment Determination and Subsequent Years
7. Hospital OQR Program Validation Requirements for Chart-Abstracted Measure Data Submitted Directly to CMS for the CY 2019 Payment Determination and Subsequent Years
8. Extension or Exemption Process for the CY 2019 Payment Determination and Subsequent Years
9. Hospital OQR Program Reconsideration and Appeals Procedures for the CY 2019 Payment Determination and Subsequent Years—Clarification
E. Payment Reduction for Hospitals That Fail To Meet the Hospital OQR Program Requirements for the CY 2017 Payment Determination
1. Background
2. Reporting Ratio Application and Associated Adjustment Policy for CY 2017
XIV. Requirements for the Ambulatory Surgical Center Quality Reporting (ASCQR) Program
A. Background
1. Overview
2. Statutory History of the ASCQR Program

3. Regulatory History of the ASCQR Program
B. ASCQR Program Quality Measures
1. Considerations in the Selection of ASCQR Program Quality Measures
2. Policies for Retention and Removal of Quality Measures From the ASCQR Program
3. ASCQR Program Quality Measures Adopted in Previous Rulemaking
4. ASCQR Program Quality Measures for the CY 2020 Payment Determination and Subsequent Years
a. ASC–13: Normothermia Outcome
(1) Background
(2) Overview of Measure
(3) Data Sources
(4) Measure Calculation
(5) Cohort
(6) Risk Adjustment
b. ASC–14: Unplanned Anterior Vitrectomy
(1) Background
(2) Overview of Measure
(3) Data Sources
(4) Measure Calculation
(5) Cohort
(6) Risk Adjustment
c. ASC–15a–e: Outpatient and Ambulatory Surgery Consumer Assessment of Healthcare Providers and Systems (OAS CAHPS) Survey Measures
(1) Background
(2) Overview of Measures
(3) Data Sources
(4) Measure Calculations
(5) Cohort
(6) Exemption
(7) Risk Adjustment
(8) Public Reporting
5. ASCQR Program Measure for Future Consideration
6. Maintenance of Technical Specifications for Quality Measures
7. Public Reporting of ASCQR Program Data
C. Administrative Requirements
1. Requirements Regarding QualityNet Account and Security Administrator
2. Requirements Regarding Participation Status
D. Form, Manner, and Timing of Data Submitted for the ASCQR Program
1. Requirements Regarding Data Processing and Collection Periods for Claims-Based Measures Using Quality Data Codes (QDCs)
2. Minimum Threshold, Minimum Case Volume, and Data Completeness for Claims-Based Measures Using QDCs
3. Requirements for Data Submitted via an Online Data Submission Tool
a. Requirements for Data Submitted via a Non-CMS Online Data Submission Tool
b. Requirements for Data Submitted via a CMS Online Data Submission Tool
4. Claims-Based Measure Data Requirements for the CY 2019 Payment Determination and Subsequent Years
5. Data Submission Requirements for ASC–15a–e: Outpatient and Ambulatory Surgery Consumer Assessment of Healthcare Providers and Systems (OAS CAHPS) Survey-Based Measures for the CY 2020 Payment Determination and Subsequent Years
a. Survey Requirements
b. Vendor Requirements
6. Extraordinary Circumstances Extensions or Exemptions for the CY 2019 Payment Determination and Subsequent Years
7. ASCQR Program Reconsideration Procedures
E. Payment Reduction for ASCs That Fail To Meet the ASCQR Program Requirements
1. Statutory Background
2. Reduction to the ASC Payment Rates for ASCs That Fail To Meet the ASCQR Program Requirements for a Payment Determination Year
XV. Transplant Outcomes: Restoring the Tolerance Range for Patient and Graft Survival
A. Background
B. Revisions to Performance Thresholds
XVI. Organ Procurement Organizations (OPOs): Changes to Definitions; Outcome Measures; and Documentation Requirements
A. Background
1. Organ Procurement Organizations (OPOs)
2. Statutory Provisions
3. HHS Initiatives Related to OPO Services
4. Requirements for OPOs
B. Proposed and Finalized Provisions
1. Definition of ''Eligible Death''
2. Aggregate Donor Yield for OPO Outcome Performance Measures
3. Organ Preparation and Transport-Documentation With the Organ
XVII. Transplant Enforcement Technical Corrections and Other Revisions to 42 CFR 488.61
A. Technical Correction to Transplant Enforcement Regulatory References
B. Other Revisions to 42 CFR 488.61
XVIII. Changes to the Medicare and Medicaid Electronic Health Record (EHR) Incentive Programs
A. Background
B. Summary of Final Policies Included in This Final Rule With Comment Period
C. Revisions to Objectives and Measures for Eligible Hospitals and CAHs
1. Removal of the Clinical Decision Support (CDS) and Computerized Provider Order Entry (CPOE) Objectives and Measures for Eligible Hospitals and CAHs
2. Reduction of Measure Thresholds for Eligible Hospitals and CAHs for 2017 and 2018
a. Changes to the Objectives and Measures for Modified Stage 2 (42 CFR 495.22) in 2017
b. Changes to the Objectives and Measures for Stage 3 (42 CFR 495.24) in 2017 and 2018
(1) Objective: Patient Electronic Access to Health Information (42 CFR 495.24(c)(5))
(2) Objective: Coordination of Care Through Patient Engagement (42 CFR 495.24(c)(6))
(3) Objective: Health Information Exchange (HIE) (42 CFR 495.24(c)(7))
(4) Objective: Public Health and Clinical Data Registry Reporting (42 CFR 495.24(c)(8))
D. Revisions to the EHR Reporting Period in 2016 for EPs, Eligible Hospitals and CAHs
1. Definition of ''EHR Reporting Period'' and ''EHR Reporting Period for a Payment Adjustment Year''
2. Clinical Quality Measurement
E. Policy To Require Modified Stage 2 for New Participants in 2017
F. Significant Hardship Exception for New Participants Transitioning to MIPS in 2017
G. Modifications To Measure Calculations for Actions Outside the EHR Reporting Period
XIX. Additional Hospital Value-Based Purchasing (VBP) Program Policies
A. Background
B. Removal of the HCAHPS Pain Management Dimension From the Hospital VBP Program
1. Background of the HCAHPS Survey in the Hospital VBP Program
2. Background of the Patient- and Caregiver-Centered Experience of Care/Care Coordination Domain Performance Scoring Methodology
3. Removal of the HCAHPS Pain Management Dimension From the Hospital VBP Program Beginning With the FY 2018 Program Year
XX. Files Available to the Public via the Internet
XXI. Collection of Information Requirements
A. Statutory Requirement for Solicitation of Comments
B. ICRs for the Hospital OQR Program
C. ICRs for the ASCQR Program
D. ICRs Relating to Changes in Transplant Enforcement Performance Thresholds
E. ICRs for Changes Relating to Organ Procurement Organizations (OPOs)
F. ICRs Relating to Changes to the Electronic Health Record (EHR) Incentive Program
G. ICRs Relating to Additional Hospital VBP Program Policies
H. ICRs for Payment for Off-Campus Provider-Based Departments Policy Changes for CY 2017
XXII. Waiver of Proposed Rulemaking and Response to Comments
A. Waiver of Proposed Rulemaking
B. Response to Comments
XXIII. Economic Analyses
A. Regulatory Impact Analysis
1. Introduction
2. Statement of Need
3. Overall Impacts for the OPPS and ASC Payment Provisions
4. Detailed Economic Analyses
a. Estimated Effects of OPPS Changes in This Final Rule With Comment Period
(1) Limitations of Our Analysis
(2) Estimated Effects of OPPS Changes on Hospitals
(3) Estimated Effects of OPPS Changes on CMHCs
(4) Estimated Effects of OPPS Changes on Beneficiaries
(5) Estimated Effects of OPPS Changes on Other Providers
(6) Estimated Effects of OPPS Changes on the Medicare and Medicaid Programs
(7) Alternative OPPS Policies Considered
b. Estimated Effects of CY 2017 ASC Payment System Policies
(1) Limitations of Our Analysis
(2) Estimated Effects of CY 2017 ASC Payment System Policies on ASCs

(3) Estimated Effects of ASC Payment System Policies on Beneficiaries
(4) Alternative ASC Payment Policies Considered
c. Accounting Statements and Tables
d. Effects of Requirements for the Hospital OQR Program
e. Effects of Requirements for the ASCQR Program
f. Effects of the Changes to Transplant Performance Thresholds
g. Effects of the Changes Relating to Organ Procurement Organizations (OPOs)
h. Effects of the Changes to the Medicare and Medicaid Electronic Health Record (EHR) Incentive Programs
i. Effects of Requirements for the Hospital VBP Program
j. Effects of Implementation of Section 603 of the Bipartisan Budget Act of 2015 Relating to Payment for Nonexcepted Items and Services Furnished by Nonexcepted Off-Campus Departments of a Provider
B. Regulatory Flexibility Act (RFA) Analysis
C. Unfunded Mandates Reform Act Analysis
D. Conclusion
XXIV. Federalism Analysis
Regulation Text

I. Summary and Background

A. Executive Summary of This Document

1. Purpose

In this document, we are updating the payment policies and payment rates for services furnished to Medicare beneficiaries in hospital outpatient departments (HOPDs) and ambulatory surgical centers (ASCs) beginning January 1, 2017. Section 1833(t) of the Social Security Act (the Act) requires us to annually review and update the payment rates for services payable under the Hospital Outpatient Prospective Payment System (OPPS). Specifically, section 1833(t)(9)(A) of the Act requires the Secretary to review certain components of the OPPS not less often than annually, and to revise the groups, relative payment weights, and other adjustments that take into account changes in medical practices, changes in technologies, and the addition of new services, new cost data, and other relevant information and factors. In addition, under section 1833(i) of the Act, we annually review and update the ASC payment rates. We describe these and various other statutory authorities in the relevant sections of this final rule with comment period. In addition, this final rule with comment period updates and refines the requirements for the Hospital Outpatient Quality Reporting (OQR) Program and the ASC Quality Reporting (ASCQR) Program.

In addition, we are making changes to the conditions for coverage (CfCs) for organ procurement organizations (OPOs); revisions to the outcome requirements for solid organ transplant programs, transplant enforcement, and for transplant documentation requirements; a technical correction to enforcement provisions for organ transplant centers; modifications to the Medicare and Medicaid Electronic Health Record (EHR) Incentive Programs to reduce hospital administrative burden and to allow hospitals to focus more on patient care; and the removal of the HCAHPS Pain Management dimension from the Hospital Value-Based Purchasing (VBP) Program.

Further, we are implementing section 603 of the Bipartisan Budget Act of 2015 relating to payment for nonexcepted items and services furnished by nonexcepted off-campus provider-based departments (PBDs) of a hospital. In conjunction with implementation of section 603 in this final rule with comment period, we are issuing in this **Federal Register** document an interim final rule with comment period that establishes payment rates under the MPFS for nonexcepted items and services furnished by nonexcepted off-campus PBDs of hospitals.

2. Summary of the Major Provisions

- *OPPS Update:* For CY 2017, we are increasing the payment rates under the OPPS by an Outpatient Department (OPD) fee schedule increase factor of 1.65 percent. This increase factor is based on the hospital inpatient market basket percentage increase of 2.7 percent for inpatient services paid under the hospital inpatient prospective payment system (IPPS), minus the multifactor productivity (MFP) adjustment of 0.3 percentage point, and minus a 0.75 percentage point adjustment required by the Affordable Care Act. Based on this update, we estimate that total payments to OPPS providers (including beneficiary cost-sharing and estimated changes in enrollment, utilization, and case-mix), for CY 2017 will be approximately $773 million, an increase of approximately $5.0 billion compared to estimated CY 2016 OPPS payments.

We are continuing to implement the statutory 2.0 percentage point reduction in payments for hospitals failing to meet the hospital outpatient quality reporting requirements, by applying a reporting factor of 0.980 to the OPPS payments and copayments for all applicable services.

- *Rural Adjustment:* We are continuing the adjustment of 7.1 percent to the OPPS payments to certain rural sole community hospitals (SCHs), including essential access community hospitals (EACHs). This adjustment applies to all services paid under the OPPS, excluding separately payable drugs and biologicals, devices paid under the pass-through payment policy, and items paid at charges reduced to cost.
- *Cancer Hospital Payment Adjustment:* For CY 2017, we are continuing to provide additional payments to cancer hospitals so that the cancer hospital's payment-to-cost ratio (PCR) after the additional payments is equal to the weighted average PCR for the other OPPS hospitals using the most recently submitted or settled cost report data. Based on those data, a target PCR of 0.91 will be used to determine the CY 2017 cancer hospital payment adjustment to be paid at cost report settlement. That is, the payment adjustments will be the additional payments needed to result in a PCR equal to 0.91 for each cancer hospital.
- *Comprehensive APCs:* For CY 2017, we are not making extensive changes to the already established methodology used for C–APCs. However, we are creating 25 new C–APCs that meet the previously established criteria, which, when combined with the existing 37 C–APCs, will bring the total number to 62 C–APCs as of January 1, 2017.
- *Chronic Care Management (CCM):* For CY 2017, we are making some minor changes to certain CCM scope-of-service elements. We refer readers to the CY 2017 MPFS final rule with comment period for a detailed discussion of these changes to the scope of service elements for CCM. We are applying these changes to CCM furnished to hospital outpatients.
- *Device-Intensive Procedures:* For CY 2017, we are finalizing our policy of determining the payment rate for any device-intensive procedure that is assigned to an APC with fewer than 100 total claims for all procedures in the APC to be based on the median cost instead of the geometric mean cost. We believe that this approach will mitigate significant year-to-year payment rate fluctuations while preserving accurate claims-data-based payment rates for low volume device-intensive procedures. In addition, we are revising the device intensive calculation methodology and calculating the device offset amount at the HCPCS code level rather than at the APC level to ensure that device intensive status is properly assigned to all device-intensive procedures.
- *Outpatient Laboratory Tests:* For CY 2017, we are discontinuing the use of the ''L1'' modifier to identify unrelated laboratory tests on claims. In addition, we are expanding the laboratory packaging exclusion that currently

applies to Molecular Pathology tests to all laboratory tests designated as advanced diagnostic laboratory tests (ADLTs) that meet the criteria of section 1834A(d)(5)(A) of the Act.

• *Packaging Policies:* The OPPS currently packages many categories of items and services that are typically provided as part of the outpatient hospital service (for example, operating and recovery room, anesthesia, among others). Packaging encourages hospital efficiency, flexibility, and long-term cost containment, and it also promotes the stability of payment for services over time. In CY 2014 and 2015, we added several new categories of packaged items and services. Among these were laboratory tests, ancillary services, services described by add-on codes, and drugs used in a diagnostic test or surgical procedure. For CY 2017, we are aligning the packaging logic for all of the conditional packaging status indicators so that packaging would occur at the claim level (instead of based on the date of service) to promote consistency and ensure that items and services that are provided during a hospital stay that may span more than one day are appropriately packaged according to OPPS packaging policies.

• *Payment Modifier for X-Ray Films:* Section 502(b) of Division O, Title V of the Consolidated Appropriations Act, 2016 (Pub. L. 114–113) amended section 1833(t)(16) of the Act by adding new subparagraph (F). New section 1833(t)(16)(F)(i) of the Act provides that, effective for services furnished during 2017 or any subsequent year, the payment under the OPPS for imaging services that are X-rays taken using film (including the X-ray component of a packaged service) that would otherwise be made under the OPPS (without application of this paragraph and before application of any other adjustment) shall be reduced by 20 percent. We are requiring that, effective for services furnished on or after January 1, 2017, hospitals are required to use a modifier on claims for X-rays that are taken using film. The use of this modifier will result in a 20-percent payment reduction for the X-ray service, as specified under section 1833(t)(16)(F)(i) of the Act, of the determined OPPS payment amount (without application of paragraph (F) and before any other adjustments under section 1833(t)).

• *Payment for Nonexcepted Items and Services Furnished by Nonexcepted Off-Campus Departments of a Provider:* We are implementing section 603 of the Bipartisan Budget Act of 2015 (Pub. L. 114–74). This provision requires that certain items and services furnished in certain off-campus PBDs shall not be considered covered OPD services for purposes of OPPS payment and those nonexcepted items and services will instead be paid ''under the applicable payment system'' beginning January 1, 2017. We are finalizing, with modification, the policies we proposed relating to which off-campus PBDs and which items and services furnished by such off-campus PBDs may be excepted from application of payment changes under this provision.

In addition, we are establishing that the Medicare Physician Fee Schedule (MPFS) will be the ''applicable payment system'' for the majority of the nonexcepted items and services furnished by nonexcepted off-campus PBDs. We are establishing new site-of-service payment rates under the MPFS to pay nonexcepted off-campus PBDs for the furnishing of nonexcepted items and services. These nonexcepted items and services must be reported on the institutional claim form and identified with a newly established claims processing modifier.

• *Ambulatory Surgical Center Payment Update:* For CY 2017, we are increasing payment rates under the ASC payment system by 1.9 percent for ASCs that meet the quality reporting requirements under the ASCQR Program. This increase is based on a projected CPI–U update of 2.2 percent minus a multifactor productivity adjustment required by the Affordable Care Act of 0.3 percentage point. Based on this update, we estimate that total payments to ASCs (including beneficiary cost-sharing and estimated changes in enrollment, utilization, and case-mix), for CY 2017 will be approximately $4,478 million, an increase of approximately $177 million compared to estimated CY 2016 Medicare payments.

• *Hospital Outpatient Quality Reporting (OQR) Program:* For the Hospital OQR Program, we are establishing measures and policies for the CY 2018 payment determination, the CY 2019 payment determination and the CY 2020 payment determination and subsequent years. For the CY 2018 payment determination and subsequent years, we are finalizing, as proposed, that we will publicly display data on the *Hospital Compare* Web site, or other CMS Web site, as soon as possible after measure data have been submitted to CMS. In addition, we are finalizing, as proposed, that hospitals will generally have approximately 30 days to preview their data. Lastly, we are finalizing, as proposed, that we also will announce the timeframes for the preview period on a CMS Web site and/or on our applicable listservs. For the CY 2019 payment determination and subsequent years, we are finalizing, as proposed, an extension of the time for filing extraordinary circumstances extensions or exemptions (ECE) requests from 45 days to 90 days from the date that the extraordinary circumstance occurred. For the CY 2020 payment determination and subsequent years, we are finalizing, as proposed, a total of seven measures: Two claims-based measures and five Outpatient and Ambulatory Surgery Consumer Assessment of Healthcare Providers and Systems (OAS CAHPS) Survey-based measures. The two claims-based measures are: (1) OP–35: Admissions and Emergency Department Visits for Patients Receiving Outpatient Chemotherapy and (2) OP–36: Hospital Visits after Hospital Outpatient Surgery (NQF #2687). The five survey-based measures are: (1) OP–37a: OAS CAHPS—About Facilities and Staff; (2) OP–37b: OAS CAHPS—Communication About Procedure; (3) OP–37c: OAS CAHPS—Preparation for Discharge and Recovery; (4) OP–37d: OAS CAHPS—Overall Rating of Facility; and (5) OP–37e: OAS CAHPS—Recommendation of Facility.

• *Ambulatory Surgical Center Quality Reporting (ASCQR) Program:* For the ASCQR Program, we are finalizing our proposals for the CY 2018 payment determination, the CY 2019 payment determination, and the CY 2020 payment determination and subsequent years. For the CY 2018 payment determination and subsequent years, we are finalizing, as proposed, that we will publicly display data on the *Hospital Compare* Web site, or other CMS Web site, as soon as possible after measure data have been submitted to CMS. In addition, we are finalizing, as proposed, that ASCs will generally have approximately 30 days to preview their data. Lastly, we are finalizing, as proposed, that we will announce the timeframes for the preview period on a CMS Web site and/or on our applicable listservs. For the CY 2019 payment determination and subsequent years, we are finalizing our proposal to change the submission deadline to May 15 for all data submitted via a CMS Web-based tool. We also are finalizing, as proposed, the extension of the submission deadline for filing extraordinary circumstances extensions or exemptions (ECE) requests from 45 days to 90 days. For the CY 2020 payment determination and subsequent years, we are finalizing, as proposed, a total of seven measures: Two measures collected via a CMS Web-based tool and five Outpatient and Ambulatory Surgery Consumer Assessment of Healthcare Providers and

Systems (OAS CAHPS) Survey-based measures. The two measures that require data to be submitted directly to CMS via a CMS Web-based tool are: (1) ASC–13: Normothermia Outcome and (2) ASC–14: Unplanned Anterior Vitrectomy. The five survey-based measures are: (1) ASC–15a: OAS CAHPS—About Facilities and Staff; (2) ASC–15b: OAS CAHPS—Communication About Procedure; (3) ASC–15c: OAS CAHPS—Preparation for Discharge and Recovery; (4) ASC–15d: OAS CAHPS—Overall Rating of Facility; and (5) ASC–15e: OAS CAHPS—Recommendation of Facility.

• *Hospital Value-Based Purchasing (VBP) Program Update:* Section 1886(o) of the Act requires the Secretary to establish a Hospital VBP Program under which value-based incentive payments are made in a fiscal year to hospitals based on their performance on measures established for a performance period for such fiscal year. In this final rule with comment period, we are removing the HCAHPS Pain Management dimension from the Hospital VBP Program, beginning with the FY 2018 program year.

• *Medicare and Medicaid Electronic Health Record (EHR) Incentive Programs:* In this final rule, we are making changes to the objectives and measures of meaningful use for Modified Stage 2 and Stage 3 starting with the EHR reporting periods in CY 2017. Under both Modified Stage 2 in 2017 and Stage 3 in 2017 and 2018, for eligible hospitals and CAHs attesting to CMS, we are eliminating the Clinical Decision Support (CDS) and Computerized Provider Order Entry (CPOE) objectives and measures, and lowering the reporting thresholds for a subset of the remaining objectives and measures, generally to the Modified Stage 2 thresholds. The reduction of measure thresholds is intended to respond to input we have received from hospitals, hospital associations, health systems, and vendors expressing concerns about the established measures. The revised requirements focus on reducing hospital administrative burden, allowing eligible hospitals and CAHs attesting to CMS to focus more on providing quality patient care, as well as focus on updating and optimizing CEHRT functionalities to sufficiently meet the requirements of the EHR Incentive Program and prepare for Stage 3 of meaningful use. Based on the public comments we received, we are finalizing a policy that these changes to the objectives and measures apply for all eligible hospitals and CAHs that attest to CMS, including eligible hospitals and CAHs that are eligible to participate in both the Medicare and Medicaid EHR Incentive Programs.

In addition, we are changing the EHR reporting period in CY 2016 and 2017 for eligible professionals, eligible hospitals, and CAHs; reporting requirements for eligible professionals, eligible hospitals, and CAHs that are new participants in 2017; and the policy on measure calculations for actions outside the EHR reporting period. Finally, we are making a one-time significant hardship exception from the 2018 payment adjustment for certain eligible professionals who are new participants in the EHR Incentive Program in 2017 and are transitioning to the Merit-Based Incentive Payment System in 2017. We believe these changes are responsive to additional stakeholder feedback received through both correspondence and in-person meetings and will result in continued advancement of certified EHR technology utilization, particularly among those eligible professionals, eligible hospitals and CAHs that have not previously achieved meaningful use, and result in a program more focused on supporting interoperability and data sharing for all participants under the Medicare and Medicaid EHR Incentive Programs.

• *Transplant Performance Thresholds:* With respect to solid organ transplant programs, we are restoring the effective tolerance range for clinical outcomes that was allowed in our original 2007 rule. These outcome requirements in the Medicare Conditions of Participation (CoPs) have been affected by the nationwide improvement in transplant outcomes, making it now more difficult for transplant programs to maintain compliance with, in effect, increasingly stringent Medicare standards for patient and graft survival. We expect that our policies will increase access to organ transplants while continuing to protect Medicare beneficiaries.

• *Organ Procurement Organizations (OPOs) Changes:* In this final rule with comment period, we are: Changing the current ''eligible death'' definition to be consistent with the OPTN definition; modifying CMS current outcome measures to be consistent with yield calculations currently utilized by the SRTR; and modifying current requirements for documentation of donor information which is sent to the transplant center along with the organ.

3. Summary of Costs and Benefits

In sections XXIII. and XXIV. of this final rule with comment period, we set forth a detailed analysis of the regulatory and Federalism impacts that these changes will have on affected entities and beneficiaries. Key estimated impacts are described below.

a. Impacts of the OPPS Update

(1) Impacts of All OPPS Changes

Table 52 in section XXIII. of this final rule with comment period displays the distributional impact of all the OPPS changes on various groups of hospitals and CMHCs for CY 2017 compared to all estimated OPPS payments in CY 2016. We estimate that the policies in this final rule with comment period will result in a 1.7 percent overall increase in OPPS payments to providers. We estimate that total OPPS payments for CY 2017, including beneficiary cost-sharing, to the approximate 3,906 facilities paid under the OPPS (including general acute care hospitals, children's hospitals, cancer hospitals, and CMHCs) will increase by approximately $773 million compared to CY 2016 payments, excluding our estimated changes in enrollment, utilization, and case-mix.

We estimated the isolated impact of our OPPS policies on CMHCs because CMHCs are only paid for partial hospitalization services under the OPPS. Continuing the provider-specific structure that we adopted beginning in CY 2011 and basing payment fully on the type of provider furnishing the service, we estimate a 15.0 percent decrease in CY 2017 payments to CMHCs relative to their CY 2016 payments.

(2) Impacts of the Updated Wage Indexes

We estimate that our update of the wage indexes based on the FY 2017 IPPS final rule wage indexes results in no change for urban hospitals and a 0.3 percent increase for rural hospitals under the OPPS. These wage indexes include the continued implementation of the OMB labor market area delineations based on 2010 Decennial Census data.

(3) Impacts of the Rural Adjustment and the Cancer Hospital Payment Adjustment

There are no significant impacts of our CY 2017 payment policies for hospitals that are eligible for the rural adjustment or for the cancer hospital payment adjustment. We are not making any change in policies for determining the rural and cancer hospital payment adjustments, and the adjustment amounts do not significantly impact the budget neutrality adjustments for these policies.

(4) Impacts of the Proposed OPD Fee Schedule Increase Factor

We estimate that, for most hospitals, the application of the OPD fee schedule increase factor of 1.65 percent to the conversion factor for CY 2017 will mitigate the impacts of the budget neutrality adjustments. As a result of the OPD fee schedule increase factor and other budget neutrality adjustments, we estimate that rural and urban hospitals will experience increases of approximately 1.7 percent for urban hospitals and 2.2 percent for rural hospitals. Classifying hospitals by teaching status or type of ownership suggests that these hospitals will receive similar increases.

b. Impacts of the ASC Payment Update

For impact purposes, the surgical procedures on the ASC list of covered procedures are aggregated into surgical specialty groups using CPT and HCPCS code range definitions. The percentage change in estimated total payments by specialty groups under the CY 2017 payment rates compared to estimated CY 2016 payment rates ranges between 12 percent for cardiovascular system procedures and −15 percent for hemic and lymphatic system procedures.

c. Impacts of the Hospital OQR Program

We do not expect our CY 2017 policies to significantly affect the number of hospitals that do not receive a full annual payment update.

d. Impacts of the ASCQR Program

We do not expect our CY 2017 policies to significantly affect the number of ASCs that do not receive a full annual payment update.

e. Impacts for Implementation of Section 603 of the Bipartisan Budget Act of 2015

We estimate that implementation of section 603 of Public Law 114–74 in this interim final rule with comment period will reduce Medicare Part B expenditures by approximately $50 million in CY 2017, relative to a baseline where section 603 was not implemented in CY 2017. This estimate is a significantly lower impact than the $330 million reduction estimated for the CY 2017 OPPS proposed rule. This lower impact estimate is primarily a result of changes in technical assumptions regarding the impact of this provision, not a result of the change in payment policy.

B. Legislative and Regulatory Authority for the Hospital OPPS

When Title XVIII of the Social Security Act was enacted, Medicare payment for hospital outpatient services was based on hospital-specific costs. In an effort to ensure that Medicare and its beneficiaries pay appropriately for services and to encourage more efficient delivery of care, the Congress mandated replacement of the reasonable cost-based payment methodology with a prospective payment system (PPS). The Balanced Budget Act of 1997 (BBA) (Pub. L. 105–33) added section 1833(t) to the Act authorizing implementation of a PPS for hospital outpatient services. The OPPS was first implemented for services furnished on or after August 1, 2000. Implementing regulations for the OPPS are located at 42 CFR parts 410 and 419.

The Medicare, Medicaid, and SCHIP Balanced Budget Refinement Act of 1999 (BBRA) (Pub. L. 106–113) made major changes in the hospital OPPS. The following Acts made additional changes to the OPPS: The Medicare, Medicaid, and SCHIP Benefits Improvement and Protection Act of 2000 (BIPA) (Pub. L. 106–554); the Medicare Prescription Drug, Improvement, and Modernization Act of 2003 (MMA) (Pub. L. 108–173); the Deficit Reduction Act of 2005 (DRA) (Pub. L. 109–171), enacted on February 8, 2006; the Medicare Improvements and Extension Act under Division B of Title I of the Tax Relief and Health Care Act of 2006 (MIEA–TRHCA) (Pub. L. 109–432), enacted on December 20, 2006; the Medicare, Medicaid, and SCHIP Extension Act of 2007 (MMSEA) (Pub. L. 110–173), enacted on December 29, 2007; the Medicare Improvements for Patients and Providers Act of 2008 (MIPPA) (Pub. L. 110–275), enacted on July 15, 2008; the Patient Protection and Affordable Care Act (Pub. L. 111–148), enacted on March 23, 2010, as amended by the Health Care and Education Reconciliation Act of 2010 (Pub. L. 111–152), enacted on March 30, 2010 (these two public laws are collectively known as the Affordable Care Act); the Medicare and Medicaid Extenders Act of 2010 (MMEA, Pub. L. 111–309); the Temporary Payroll Tax Cut Continuation Act of 2011 (TPTCCA, Pub. L. 112–78), enacted on December 23, 2011; the Middle Class Tax Relief and Job Creation Act of 2012 (MCTRJCA, Pub. L. 112–96), enacted on February 22, 2012; the American Taxpayer Relief Act of 2012 (Pub. L. 112–240), enacted January 2, 2013; the Pathway for SGR Reform Act of 2013 (Pub. L. 113–67) enacted on December 26, 2013; the Protecting Access to Medicare Act of 2014 (PAMA, Pub. L. 113–93), enacted on March 27, 2014; the Medicare Access and CHIP Reauthorization Act (MACRA) of 2015 (Pub. L. 114–10), enacted April 16, 2015; the Bipartisan Budget Act of 2015 (Pub. L. 114–74), enacted November 2, 2015; and the Consolidated Appropriations Act, 2016 (Pub. L. 114–113), enacted on December 18, 2015.

Under the OPPS, we pay for hospital Part B services on a rate-per-service basis that varies according to the APC group to which the service is assigned. We use the Healthcare Common Procedure Coding System (HCPCS) (which includes certain Current Procedural Terminology (CPT) codes) to identify and group the services within each APC. The OPPS includes payment for most hospital outpatient services, except those identified in section I.C. of this final rule with comment period. Section 1833(t)(1)(B) of the Act provides for payment under the OPPS for hospital outpatient services designated by the Secretary (which includes partial hospitalization services furnished by CMHCs), and certain inpatient hospital services that are paid under Medicare Part B.

The OPPS rate is an unadjusted national payment amount that includes the Medicare payment and the beneficiary copayment. This rate is divided into a labor-related amount and a nonlabor-related amount. The labor-related amount is adjusted for area wage differences using the hospital inpatient wage index value for the locality in which the hospital or CMHC is located.

All services and items within an APC group are comparable clinically and with respect to resource use (section 1833(t)(2)(B) of the Act). In accordance with section 1833(t)(2) of the Act, subject to certain exceptions, items and services within an APC group cannot be considered comparable with respect to the use of resources if the highest median cost (or mean cost, if elected by the Secretary) for an item or service in the APC group is more than 2 times greater than the lowest median cost (or mean cost, if elected by the Secretary) for an item or service within the same APC group (referred to as the ''2 times rule''). In implementing this provision, we generally use the cost of the item or service assigned to an APC group.

For new technology items and services, special payments under the OPPS may be made in one of two ways. Section 1833(t)(6) of the Act provides for temporary additional payments, which we refer to as ''transitional pass-through payments,'' for at least 2 but not more than 3 years for certain drugs, biological agents, brachytherapy devices used for the treatment of cancer, and categories of other medical devices. For new technology services that are not

eligible for transitional pass-through payments, and for which we lack sufficient clinical information and cost data to appropriately assign them to a clinical APC group, we have established special APC groups based on costs, which we refer to as New Technology APCs. These New Technology APCs are designated by cost bands which allow us to provide appropriate and consistent payment for designated new procedures that are not yet reflected in our claims data. Similar to pass-through payments, an assignment to a New Technology APC is temporary; that is, we retain a service within a New Technology APC until we acquire sufficient data to assign it to a clinically appropriate APC group.

C. Excluded OPPS Services and Hospitals

Section 1833(t)(1)(B)(i) of the Act authorizes the Secretary to designate the hospital outpatient services that are paid under the OPPS. While most hospital outpatient services are payable under the OPPS, section 1833(t)(1)(B)(iv) of the Act excludes payment for ambulance, physical and occupational therapy, and speech-language pathology services, for which payment is made under a fee schedule. It also excludes screening mammography, diagnostic mammography, and effective January 1, 2011, an annual wellness visit providing personalized prevention plan services. The Secretary exercises the authority granted under the statute to also exclude from the OPPS certain services that are paid under fee schedules or other payment systems. Such excluded services include, for example, the professional services of physicians and nonphysician practitioners paid under the Medicare Physician Fee Schedule (MPFS); certain laboratory services paid under the Clinical Laboratory Fee Schedule (CLFS); services for beneficiaries with end-stage renal disease (ESRD) that are paid under the ESRD prospective payment system; and services and procedures that require an inpatient stay that are paid under the hospital IPPS. In addition, section 1833(t)(1)(B)(v) of the Act authorizes that applicable items and services furnished by nonexcepted off-campus provider-based departments of a hospital on or after January 1, 2017, will not be considered covered outpatient department services as defined under section 1833(t)(1)(B) of the Act for purposes of payment under the OPPS. We set forth the services that are excluded from payment under the OPPS in regulations at 42 CFR 419.22, which was amended by adding paragraph (v) to implement exclusion of items and services furnished by nonexcepted off-campus provider-based departments from the definition of covered outpatient department services.

Under § 419.20(b) of the regulations, we specify the types of hospitals that are excluded from payment under the OPPS. These excluded hospitals include: Critical access hospitals (CAHs); hospitals located in Maryland and paid under the Maryland All-Payer Model; hospitals located outside of the 50 States, the District of Columbia, and Puerto Rico; and Indian Health Service (IHS) hospitals.

D. Prior Rulemaking

On April 7, 2000, we published in the **Federal Register** a final rule with comment period (65 FR 18434) to implement a prospective payment system for hospital outpatient services. The hospital OPPS was first implemented for services furnished on or after August 1, 2000. Section 1833(t)(9)(A) of the Act requires the Secretary to review certain components of the OPPS, not less often than annually, and to revise the groups, relative payment weights, and other adjustments that take into account changes in medical practices, changes in technologies, and the addition of new services, new cost data, and other relevant information and factors.

Since initially implementing the OPPS, we have published final rules in the **Federal Register** annually to implement statutory requirements and changes arising from our continuing experience with this system. These rules can be viewed on the CMS Web site at: *https://www.cms.gov/Medicare/Medicare-Fee-for-Service-Payment/HospitalOutpatientPPS/index.html*.

E. Advisory Panel on Hospital Outpatient Payment (the HOP Panel or the Panel)

1. Authority of the Panel

Section 1833(t)(9)(A) of the Act, as amended by section 201(h) of Public Law 106–113, and redesignated by section 202(a)(2) of Public Law 106–113, requires that we consult with an external advisory panel of experts to annually review the clinical integrity of the payment groups and their weights under the OPPS. In CY 2000, based on section 1833(t)(9)(A) of the Act, the Secretary established the Advisory Panel on Ambulatory Payment Classification Groups (APC Panel) to fulfill this requirement. In CY 2011, based on section 222 of the PHS Act which gives discretionary authority to the Secretary to convene advisory councils and committees, the Secretary expanded the panel's scope to include the supervision of hospital outpatient therapeutic services in addition to the APC groups and weights. To reflect this new role of the panel, the Secretary changed the panel's name to the Advisory Panel on Hospital Outpatient Payment (the HOP Panel, or the Panel). The Panel is not restricted to using data compiled by CMS, and in conducting its review, it may use data collected or developed by organizations outside the Department.

2. Establishment of the Panel

On November 21, 2000, the Secretary signed the initial charter establishing the HOP Panel, and at that time named the APC Panel. This expert panel is composed of appropriate representatives of providers (currently employed full-time, not as consultants, in their respective areas of expertise), reviews clinical data, and advises CMS about the clinical integrity of the APC groups and their payment weights. Since CY 2012, the Panel also is charged with advising the Secretary on the appropriate level of supervision for individual hospital outpatient therapeutic services. The Panel is technical in nature, and it is governed by the provisions of the Federal Advisory Committee Act (FACA). The current charter specifies, among other requirements, that: The Panel continues to be technical in nature; is governed by the provisions of the FACA; may convene up to three meetings per year; has a Designated Federal Official (DFO); and is chaired by a Federal Official designated by the Secretary. The Panel's charter was amended on November 15, 2011, renaming the Panel and expanding the Panel's authority to include supervision of hospital outpatient therapeutic services and to add Critical Access Hospital (CAH) representation to its membership. The current charter was renewed on November 6, 2014 (80 FR 23009) and the number of panel members was revised from up to 19 to up to 15 members.

The current Panel membership and other information pertaining to the Panel, including its charter, **Federal Register** notices, membership, meeting dates, agenda topics, and meeting reports, can be viewed on the CMS Web site at: *https://www.cms.gov/Regulations-and-Guidance/Guidance/FACA/AdvisoryPanelonAmbulatoryPaymentClassificationGroups.html*.

3. Panel Meetings and Organizational Structure

The Panel has held multiple meetings, with the last meeting taking place on August 22, 2016. Prior to each meeting,

we publish a notice in the **Federal Register** to announce the meeting and, when necessary, to solicit nominations for Panel membership, to announce new members and to announce any other changes that the public should be aware of. Beginning in CY 2017, we will transition to one meeting per year, which will be scheduled in the summer (81 FR 31941).

The Panel has established an operational structure that, in part, currently includes the use of three subcommittees to facilitate its required review process. The three current subcommittees are the Data Subcommittee, the Visits and Observation Subcommittee, and the Subcommittee for APC Groups and Status Indicator (SI) Assignments. The Data Subcommittee is responsible for studying the data issues confronting the Panel and for recommending options for resolving them. The Visits and Observation Subcommittee reviews and makes recommendations to the Panel on all technical issues pertaining to observation services and hospital outpatient visits paid under the OPPS (for example, APC configurations and APC relative payment weights). The Subcommittee for APC Groups and SI Assignments advises the Panel on the following issues: The appropriate status indicators to be assigned to HCPCS codes, including but not limited to whether a HCPCS code or a category of codes should be packaged or separately paid; and the appropriate APC assignment of HCPCS codes regarding services for which separate payment is made.

Each of these subcommittees was established by a majority vote from the full Panel during a scheduled Panel meeting, and the Panel recommended at the August 22, 2016 meeting that the subcommittees continue. We accepted this recommendation.

Discussions of the other recommendations made by the Panel at the March 14, 2016 and August 22, 2016 Panel meetings are included in the sections of this final rule with comment period that are specific to each recommendation. For discussions of earlier Panel meetings and recommendations, we refer readers to previously published OPPS/ASC proposed and final rules, the CMS Web site mentioned earlier in this section, and the FACA database at: *http://facadatabase.gov/*.

F. Public Comments Received on the CY 2016 OPPS/ASC Final Rule With Comment Period

We received 25 timely pieces of correspondence on the CY 2016 OPPS/ASC final rule with comment period that appeared in the **Federal Register** on November 13, 2015 (80 FR 70298), some of which contained comments on the interim APC assignments and/or status indicators of new or replacement Level II HCPCS codes (identified with comment indicator ''NI'' in OPPS Addendum B, ASC Addendum AA, and ASC Addendum BB to that final rule). Summaries of the public comments on new or replacement Level II HCPCS codes are set forth in this CY 2017 final rule with comment period under the appropriate subject matter headings.

II. Updates Affecting OPPS Payments

A. Recalibration of APC Relative Payment Weights

1. Database Construction

a. Database Source and Methodology

Section 1833(t)(9)(A) of the Act requires that the Secretary review not less often than annually and revise the relative payment weights for APCs. In the April 7, 2000 OPPS final rule with comment period (65 FR 18482), we explained in detail how we calculated the relative payment weights that were implemented on August 1, 2000 for each APC group.

In the CY 2017 OPPS/ASC proposed rule (81 FR 45615), for CY 2017, we proposed to recalibrate the APC relative payment weights for services furnished on or after January 1, 2017, and before January 1, 2018 (CY 2017), using the same basic methodology that we described in the CY 2016 OPPS/ASC final rule with comment period (80 FR 70309 through 70321). That is, we proposed to recalibrate the relative payment weights for each APC based on claims and cost report data for hospital outpatient department (HOPD) services, using the most recent available data to construct a database for calculating APC group weights.

For the purpose of recalibrating the proposed APC relative payment weights for CY 2017, we used approximately 163 million final action claims (claims for which all disputes and adjustments have been resolved and payment has been made) for HOPD services furnished on or after January 1, 2015, and before January 1, 2016.

Addendum N to the proposed rule included the proposed list of bypass codes for CY 2017. The proposed list of bypass codes contains codes that were reported on claims for services in CY 2015 and, therefore, includes codes that were in effect in CY 2015 and used for billing, but were deleted for CY 2016. We retained these deleted bypass codes on the proposed CY 2017 bypass list because these codes existed in CY 2015 and were covered OPD services in that period, and CY 2015 claims data are used to calculate CY 2017 payment rates. Keeping these deleted bypass codes on the bypass list potentially allows us to create more ''pseudo'' single procedure claims for ratesetting purposes. ''Overlap bypass codes'' that are members of the proposed multiple imaging composite APCs were identified by asterisks (*) in the third column of Addendum N to the proposed rule. HCPCS codes that we proposed to add for CY 2017 were identified by asterisks (*) in the fourth column of Addendum N.

We did not receive any public comments on our general proposal to recalibrate the relative payment weights for each APC based on claims and cost report data for HOPD services or on our proposed bypass code process. Therefore, we are adopting as final the proposed ''pseudo'' single claims process and the final CY 2017 bypass list of 194 HCPCS codes, as displayed in Addendum N to this final rule with comment period (which is available via the Internet on the CMS Web site). For this final rule with comment period, for the purpose of recalibrating the final APC relative payment weights for CY 2017, we used approximately 86 million final action claims (claims for which all disputes and adjustments have been resolved and payment has been made) for HOPD services furnished on or after January 1, 2015, and before January 1, 2016. For exact numbers of claims used and additional details on the claims accounting process, we refer readers to the claims accounting narrative under supporting documentation for this CY 2017 OPPS/ASC final rule with comment period on the CMS Web site at: *http://www.cms.gov/Medicare/Medicare-Fee-for-Service-Payment/HospitalOutpatientPPS/index.html.*

Table 1 below contains the list of codes that we are removing from the CY 2017 bypass list.

TABLE 1—HCPCS CODES REMOVED FROM THE CY 2017 BYPASS LIST

HCPCS code	HCPCS short descriptor
95925	Somatosensory testing.
95808	Polysom any age 1–3> param.
90845	Psychoanalysis.
96151	Assess hlth/behave subseq.
31505	Diagnostic laryngoscopy.
95872	Muscle test one fiber.

b. Calculation and Use of Cost-to-Charge Ratios (CCRs)

For CY 2017, in the CY 2017 OPPS/ASC proposed rule (81 FR 45616), we

proposed to continue to use the hospital-specific overall ancillary and departmental cost-to-charge ratios (CCRs) to convert charges to estimated costs through application of a revenue code-to-cost center crosswalk. To calculate the APC costs on which the CY 2017 APC payment rates are based, we calculated hospital-specific overall ancillary CCRs and hospital-specific departmental CCRs for each hospital for which we had CY 2015 claims data by comparing these claims data to the most recently available hospital cost reports, which, in most cases, are from CY 2014. For the proposed CY 2017 OPPS payment rates, we used the set of claims processed during CY 2015. We applied the hospital-specific CCR to the hospital's charges at the most detailed level possible, based on a revenue code-to-cost center crosswalk that contains a hierarchy of CCRs used to estimate costs from charges for each revenue code. That crosswalk is available for review and continuous comment on the CMS Web site at: *http://www.cms.gov/Medicare/Medicare-Fee-for-Service-Payment/HospitalOutpatientPPS/index.html.*

To ensure the completeness of the revenue code-to-cost center crosswalk, we reviewed changes to the list of revenue codes for CY 2015 (the year of claims data we used to calculate the proposed CY 2017 OPPS payment rates) and found that the National Uniform Billing Committee (NUBC) did not add any new revenue codes to the NUBC 2015 Data Specifications Manual.

In accordance with our longstanding policy, we calculated CCRs for the standard and nonstandard cost centers accepted by the electronic cost report database. In general, the most detailed level at which we calculated CCRs was the hospital-specific departmental level. For a discussion of the hospital-specific overall ancillary CCR calculation, we refer readers to the CY 2007 OPPS/ASC final rule with comment period (71 FR 67983 through 67985). The calculation of blood costs is a longstanding exception (since the CY 2005 OPPS) to this general methodology for calculation of CCRs used for converting charges to costs on each claim. This exception is discussed in detail in the CY 2007 OPPS/ASC final rule with comment period and discussed further in section II.A.2.b.(1) of the proposed rule (81 FR 45617) and of this final rule with comment period.

Comment: One commenter supported the CY 2014 final rule transitional policy of excluding providers that use a ''square foot'' methodology to calculate CCRs used to estimate costs associated with the CT and MRI APCs for CYs 2014–2017, as discussed in the CY 2017 OPPS proposed rule claims accounting narrative on pages 33 through 37, that was made available under supporting documentation for the CY 2017 OPPS/ASC proposed rule on the CMS Web site at: *http://www.cms.gov/Medicare/Medicare-Fee-for-Service-Payment/HospitalOutpatientPPS/index.html.* However, the commenter opposed the provision of the CY 2014 final rule policy that was discussed in the CY 2017 OPPS proposed rule claims accounting narrative that sunsets this transitional policy after CY 2017.

Response: We thank the commenter for its support of our proposed CY 2017 policy. In response to the commenter's concern about the sunset of the transitional policy after CY 2017, while CY 2018 payment policies will be addressed in the CY 2018 OPPS/ASC proposed rule, we note that the sunset of this transitional policy for CY 2018 was discussed in the CY 2014 OPPS/ASC final rule with comment period. We believe that 4 years is sufficient time for hospitals that have not done so to transition to a more accurate cost allocation method and for the related data to be available for ratesetting purposes. After consideration of the public comment we received on the general CCR process, we are finalizing using the hospital-specific overall ancillary and departmental CCRs to convert charges to estimated costs through application of a revenue code-to-cost center crosswalk and the established methodology for CY 2017.

2. Data Development Process and Calculation of Costs Used for Ratesetting

In this section of this final rule with comment period, we discuss the use of claims to calculate the OPPS payment rates for CY 2017. The Hospital OPPS page on the CMS Web site on which this final rule with comment period is posted (*http://www.cms.gov/Medicare/Medicare-Fee-for-Service-Payment/HospitalOutpatientPPS/index.html*) provides an accounting of claims used in the development of the final payment rates. That accounting provides additional detail regarding the number of claims derived at each stage of the process. In addition, below in this section we discuss the file of claims that comprises the data set that is available for purchase under a CMS data use agreement. The CMS Web site, *http://www.cms.gov/Medicare/Medicare-Fee-for-Service-Payment/HospitalOutpatientPPS/index.html,* includes information about purchasing the ''OPPS Limited Data Set,'' which now includes the additional variables previously available only in the OPPS Identifiable Data Set, including ICD–9–CM diagnosis codes and revenue code payment amounts. This file is derived from the CY 2015 claims that were used to calculate the payment rates for the CY 2017 OPPS.

In the history of the OPPS, we have traditionally established the scaled relative weights on which payments are based using APC median costs, which is a process described in the CY 2012 OPPS/ASC final rule with comment period (76 FR 74188). However, as discussed in more detail in section II.A.2.f. of the CY 2013 OPPS/ASC final rule with comment period (77 FR 68259 through 68271), we finalized the use of geometric mean costs to calculate the relative weights on which the CY 2013 OPPS payment rates were based. While this policy changed the cost metric on which the relative payments are based, the data process in general remained the same, under the methodologies that we used to obtain appropriate claims data and accurate cost information in determining estimated service cost. For CY 2017, in the CY 2017 OPPS/ASC proposed rule (81 FR 45616), we proposed to continue to use geometric mean costs to calculate the relative weights on which the CY 2017 OPPS payment rates are based.

We did not receive any public comments on this proposed process and are finalizing our proposed methodology for calculating geometric mean costs for purposes of creating relative payment weights and subsequent APC payment rates for the CY 2017 OPPS. We used the methodology described in sections II.A.2.a. through II.A.2.d. of this final rule with comment period to calculate the costs we used to establish the relative payment weights used in calculating the final OPPS payment rates for CY 2017 shown in Addenda A and B to this final rule with comment period (which are available via the Internet on the CMS Web site). We refer readers to section II.A.4. of this final rule with comment period for a discussion of the conversion of APC costs to scaled payment weights.

For details of the claims process used in this final rule with comment period, we refer readers to the claims accounting narrative under supporting documentation for this CY 2017 OPPS/ASC final rule with comment period on the CMS Web site at: *http://www.cms.gov/Medicare/Medicare-Fee-for-Service-Payment/HospitalOutpatientPPS/index.html.*

a. Recommendations of the Advisory Panel on Hospital Outpatient Payment (the Panel) Regarding Data Development

As we discussed in the CY 2017 OPPS/ASC proposed rule (81 FR 45616 through 45617), at the March 14, 2016 meeting of the Panel, we presented our standard analysis of APCs, specifically those APCs for which geometric mean costs in the CY 2015 claims data through September 2015 varied significantly from the CY 2014 claims data used for the CY 2016 OPPS/ASC final rule with comment period. At the March 14, 2016 Panel meeting, the Panel made three recommendations related to the data process. The Panel's data-related recommendations and our responses follow.

Recommendation: The Panel recommends that CMS provide the Data Subcommittee a list of APCs fluctuating significantly in costs prior to each Panel meeting.

CMS Response: We accepted this recommendation.

Recommendation: The Panel recommends that the work of the Data Subcommittee continue.

CMS Response: We accepted this recommendation.

Recommendation: The Panel recommends that Michael Schroyer continue serving as subcommittee Chair for the August 2016 HOP Panel.

CMS Response: We accepted this recommendation.

At the August 22, 2016 meeting of the Panel, we provided the Data Committee a list of APCs for CY 2017 for which geometric mean costs in the CY 2015 claims data varied significantly from the CY 2014 claims data used for the CY 2016 OPPS/ASC final rule with comment period. At the August 22, 2016 Panel meeting, the Panel made four recommendations related to the data process. The Panel's data-related recommendations and our responses follow.

Recommendation: The Panel recommends that CMS provide the Data Subcommittee a list of APCs fluctuating significantly in costs prior to each Panel meeting.

CMS Response: We are accepting this recommendation.

Recommendation: The Panel recommends that CMS provide the Data Subcommittee a presentation on the claims accounting process prior to each HOP Panel meeting.

CMS Response: We are accepting this recommendation.

Recommendation: The Panel recommends that the work of the data subcommittee continue.

CMS Response: We are accepting this recommendation.

Recommendation: The Panel recommends that Michael Schroyer continue serving as Chair of the Data Subcommittee.

CMS Response: We are accepting this recommendation.

b. Calculation of Single Procedure APC Criteria-Based Costs

(1) Blood and Blood Products

(a) Methodology

Since the implementation of the OPPS in August 2000, we have made separate payments for blood and blood products through APCs rather than packaging payment for them into payments for the procedures with which they are administered. Hospital payments for the costs of blood and blood products, as well as for the costs of collecting, processing, and storing blood and blood products, are made through the OPPS payments for specific blood product APCs.

For CY 2017, in the CY 2017 OPPS/ASC proposed rule (81 FR 45617), we proposed to continue to establish payment rates for blood and blood products using our blood-specific CCR methodology, which utilizes actual or simulated CCRs from the most recently available hospital cost reports to convert hospital charges for blood and blood products to costs. This methodology has been our standard ratesetting methodology for blood and blood products since CY 2005. It was developed in response to data analysis indicating that there was a significant difference in CCRs for those hospitals with and without blood-specific cost centers, and past public comments indicating that the former OPPS policy of defaulting to the overall hospital CCR for hospitals not reporting a blood-specific cost center often resulted in an underestimation of the true hospital costs for blood and blood products. Specifically, in order to address the differences in CCRs and to better reflect hospitals' costs, we proposed to continue to simulate blood CCRs for each hospital that does not report a blood cost center by calculating the ratio of the blood-specific CCRs to hospitals' overall CCRs for those hospitals that do report costs and charges for blood cost centers. We also proposed to apply this mean ratio to the overall CCRs of hospitals not reporting costs and charges for blood cost centers on their cost reports in order to simulate blood-specific CCRs for those hospitals. We proposed to calculate the costs upon which the CY 2017 payment rates for blood and blood products are based using the actual blood-specific CCR for hospitals that reported costs and charges for a blood cost center and a hospital-specific, simulated blood-specific CCR for hospitals that did not report costs and charges for a blood cost center.

We continue to believe that the hospital-specific, simulated blood-specific CCR methodology better responds to the absence of a blood-specific CCR for a hospital than alternative methodologies, such as defaulting to the overall hospital CCR or applying an average blood-specific CCR across hospitals. Because this methodology takes into account the unique charging and cost accounting structure of each hospital, we believe that it yields more accurate estimated costs for these products. We continue to believe that this methodology in CY 2017 would result in costs for blood and blood products that appropriately reflect the relative estimated costs of these products for hospitals without blood cost centers and, therefore, for these blood products in general.

We note that, as discussed in section II.A.2.e. of the CY 2014 OPPS/ASC final rule with comment period (78 FR 74861 through 74910), the CY 2015 OPPS/ASC final rule with comment period (79 FR 66798 through 66810), and the CY 2016 OPPS/ASC final rule with comment period (80 FR 70325 through 70339), we defined a comprehensive APC (C–APC) as a classification for the provision of a primary service and all adjunctive services provided to support the delivery of the primary service. Under this policy, we include the costs of blood and blood products when calculating the overall costs of these C–APCs. We proposed to continue to apply the blood-specific CCR methodology described in this section when calculating the costs of the blood and blood products that appear on claims with services assigned to the C–APCs. Because the costs of blood and blood products will be reflected in the overall costs of the C–APCs (and, as a result, in the payment rates of the C–APCs), we proposed to not make separate payments for blood and blood products when they appear on the same claims as services assigned to the C–APCs (we refer readers to the CY 2015 OPPS/ASC final rule with comment period (79 FR 66796)).

We invited public comments on these proposals. We also referred readers to Addendum B to the proposed rule (which was available via the Internet on the CMS Web site) for the proposed CY 2017 payment rates for blood and blood products (which were identified with status indicator ''R''). For a more detailed discussion of the blood-specific CCR methodology, we refer readers to the CY 2005 OPPS proposed rule (69 FR

50524 through 50525). For a full history of OPPS payment for blood and blood products, we refer readers to the CY 2008 OPPS/ASC final rule with comment period (72 FR 66807 through 66810).

Comment: Commenters supported the proposal to continue to separately pay for blood and blood products using a blood-specific CCR methodology.

Response: We appreciate the commenters' support.

After consideration of the public comments we received, we are finalizing our CY 2017 proposal to continue to establish payment rates for blood and blood products using our blood-specific CCR methodology. The final CY 2017 payment rates for blood and blood products (which are identified with status indicator ''R'') are reflective of the use of the hospital-specific simulated blood-specific CCR methodology and can be found in Addendum B to this final rule with comment period (which is available via the Internet on the CMS Web site).

(b) Solicitation of Public Comments

As discussed in the CY 2016 OPPS/ASC final rule with comment period (80 FR 70323), we are in the process of examining the current set of HCPCS P-codes for blood products, which became effective many years ago. Because these HCPCS P-codes were created many years ago, we are considering whether this code set could benefit from some code descriptor revisions, updating, and/or consolidation to make these codes properly reflect current product descriptions and utilization while minimizing redundancy and potentially outdated descriptors. In the CY 2017 OPPS/ASC proposed rule (81 FR 45617 through 45618), we requested public comments regarding the adequacy and necessity (in terms of the existing granularity) of the current descriptors for the HCPCS P-codes describing blood products. Specifically, there are three main categories of blood products: Red blood cells; platelets; and plasma. In each of these categories, there are terms that describe various treatments or preparations of the blood products, with each, in several cases, represented individually and in combination. For example, for pheresis platelets, there are codes for ''leukocyte reduced,'' ''irradiated,'' ''leukocyte reduced + irradiated,'' and ''leukocyte reduced + irradiated + CMV-negative,'' among others. We asked the blood product stakeholder community whether the current blood product HCPCS P-code descriptors with the associated granularity best describe the state of the current technology for blood products that hospitals currently provide to hospital outpatients. In several cases, the hospital costs as calculated from the CMS claims data are similar for blood products of the same type (for example, pheresis platelets) that have different code descriptors, which indicates to us that there is not a significant difference in the resources needed to produce the similar products. Again, we invited public comments on the current set of active HCPCS P-codes that describe blood products regarding how the code descriptors could be revised and updated (if necessary) to reflect the current blood products provided to hospital outpatients. The current set of active HCPCS P-codes that describe blood products can be found in Addendum B to the proposed rule and this final rule with comment period (which is available via the Internet on the CMS Web site).

Comment: Several commenters responded to the solicitation for public comments and supported a thorough examination of the current set of HCPCS P-codes for blood products as a necessary undertaking because the HCPCS P-codes were created several years ago. Several commenters recommended that CMS convene a stakeholder group that includes representatives of hospitals, blood banks, the American Red Cross, and others to discuss a framework to systematically review and revise the HCPCS P-codes for blood products. Commenters also encouraged CMS to retain individual HCPCS P-codes for unique blood products with significant therapeutic distinctions, as opposed to creating modifiers to be applied to the existing HCPCS P-codes. Commenters also suggested that CMS establish a ''not otherwise classified (NOC)'' code for blood products, which would allow hospitals to begin immediately billing for a new blood product that is not described by a specific HCPCS P-code. One commenter supported the use of broader descriptions for HCPCS P-codes when more granular language is no longer meaningful for differentiating between different types of blood and blood products, and where the costs and volume of the HCPCS P-codes are similar. Other commenters suggested specific modifications to the order, classification, and code descriptors of the blood and blood product HCPCS P-codes.

Response: We appreciate the commenters' detailed responses. These comments will be taken into consideration in the development of proposals to update the HCPCS P-codes that describe blood products.

(c) Rapid Bacterial Testing for Platelets

In March 2016, the Food and Drug Administration (FDA) issued draft guidance for the health care industry entitled, ''Bacterial Risk Control Strategies for Blood Collection Establishments and Transfusion Services to Enhance the Safety and Availability of Platelets for Transfusion'' (available at: *http://www.fda.gov/BiologicsBloodVaccines/GuidanceComplianceRegulatoryInformation/Guidances/default.htm*). This guidance encourages the use of rapid bacterial testing devices or pathogen-reduction technology for platelets to adequately control the risk of bacterial contamination of platelets.

In the CY 2016 OPPS/ASC final rule with comment period (80 FR 70322), CMS established three HCPCS P-codes for pathogen-reduced blood products, which became effective January 1, 2016. These codes included: HCPCS code P9070 (Plasma, pooled multiple donor, pathogen reduced, frozen, each unit); HCPCS code P9071 (Plasma (single donor), pathogen reduced, frozen, each unit); and HCPCS code P9072 (Platelets, pheresis, pathogen reduced, each unit).

The HCPCS Workgroup has decided to revise the HCPCS code established in CY 2016 for pathogen-reduced platelets (HCPCS code P9072) to include the use of pathogen-reduction technology or rapid bacterial testing. Specifically, the descriptor for this code will be revised, effective January 1, 2017, to read as follows: HCPCS code P9072 (Platelets, pheresis, pathogen reduced or rapid bacterial tested, each unit). The payment rate for HCPCS code P9072 is based on a crosswalk to HCPCS code P9037 (Platelets, pheresis, leukocyte reduced, irradiated, each unit). We refer readers to the CY 2016 OPPS/ASC final rule with comment period for a further discussion of crosswalks for pathogen-reduced blood products (80 FR 70323). When claims data become available for HCPCS code P9072, we will establish a payment rate for this code using that data and our blood-specific CCR methodology. The revised HCPCS code descriptor and final payment rate for this service can be found in Addendum B of this final rule with comment period (which is available via the Internet on the CMS Web site).

(2) Brachytherapy Sources

Section 1833(t)(2)(H) of the Act mandates the creation of additional groups of covered OPD services that classify devices of brachytherapy consisting of a seed or seeds (or radioactive source) (''brachytherapy sources'') separately from other services

or groups of services. The statute provides certain criteria for the additional groups. For the history of OPPS payment for brachytherapy sources, we refer readers to prior OPPS final rules, such as the CY 2012 OPPS/ASC final rule with comment period (77 FR 68240 through 68241). As we have stated in prior OPPS updates, we believe that adopting the general OPPS prospective payment methodology for brachytherapy sources is appropriate for a number of reasons (77 FR 68240). The general OPPS methodology uses costs based on claims data to set the relative payment weights for hospital outpatient services. This payment methodology results in more consistent, predictable, and equitable payment amounts per source across hospitals by averaging the extremely high and low values, in contrast to payment based on hospitals' charges adjusted to costs. We believe that the OPPS methodology, as opposed to payment based on hospitals' charges adjusted to cost, also would provide hospitals with incentives for efficiency in the provision of brachytherapy services to Medicare beneficiaries. Moreover, this approach is consistent with our payment methodology for the vast majority of items and services paid under the OPPS. We refer readers to the CY 2016 OPPS/ASC final rule with comment period (80 FR 70323 through 70325) for further discussion of the history of OPPS payment for brachytherapy sources.

In the CY 2017 OPPS/ASC proposed rule (81 FR 45618), for CY 2017, we proposed to use the costs derived from CY 2015 claims data to set the CY 2017 payment rates for brachytherapy sources because CY 2015 is the same year of data we proposed to use to set the proposed payment rates for most other items and services that would be paid under the CY 2017 OPPS. We proposed to base the payment rates for brachytherapy sources on the geometric mean unit costs for each source, consistent with the methodology that we proposed for other items and services paid under the OPPS, as discussed in section II.A.2. of the proposed rule. We also proposed to continue the other payment policies for brachytherapy sources that we finalized and first implemented in the CY 2010 OPPS/ASC final rule with comment period (74 FR 60537). We proposed to pay for the stranded and nonstranded not otherwise specified (NOS) codes, HCPCS codes C2698 and C2699, at a rate equal to the lowest stranded or nonstranded prospective payment rate for such sources, respectively, on a per source basis (as opposed to, for example, a per mCi), which is based on the policy we established in the CY 2008 OPPS/ASC final rule with comment period (72 FR 66785). For CY 2017 and subsequent years, we also proposed to continue the policy we first implemented in the CY 2010 OPPS/ASC final rule with comment period (74 FR 60537) regarding payment for new brachytherapy sources for which we have no claims data, based on the same reasons we discussed in the CY 2008 OPPS/ASC final rule with comment period (72 FR 66786; which was delayed until January 1, 2010 by section 142 of Pub. L. 110–275). Specifically, this policy is intended to enable us to assign new HCPCS codes for new brachytherapy sources to their own APCs, with prospective payment rates set based on our consideration of external data and other relevant information regarding the expected costs of the sources to hospitals.

The proposed CY 2017 payment rates for brachytherapy sources were included in Addendum B to the proposed rule (which is available via the Internet on the CMS Web site) and were identified with status indicator ''U''. We note that, for CY 2017, we proposed to assign new proposed status indicator ''E2'' (Items and Services for Which Pricing Information and Claims Data Are Not Available) to HCPCS code C2644 (Brachytherapy cesium-131 chloride) because this code was not reported on CY 2015 claims. Therefore, we are unable to calculate a payment rate based on the general OPPS ratesetting methodology described earlier. Although HCPCS code C2644 became effective July 1, 2014, and although we would expect that if a hospital furnished a brachytherapy source described by this code in CY 2015, HCPCS code C2644 should appear on the CY 2015 claims, there are no CY 2015 claims reporting this code. In addition, unlike new brachytherapy sources HCPCS codes, we will not consider external data to determine a proposed payment rate for HCPCS code C2644 for CY 2017.

Therefore, we proposed to assign new proposed status indicator ''E2'' to HCPCS code C2644.

We invited public comments on this proposed policy. We also requested recommendations for new HCPCS codes to describe new brachytherapy sources consisting of a radioactive isotope, including a detailed rationale to support recommended new sources.

Comment: One commenter requested that CMS establish a new HCPCS code to specifically describe the use of CivaString®, a linear, low dose rate polymer encapsulated palladium-103 brachytherapy source. The commenter stated that CivaString® became commercially available in CY 2013, and providers began reporting charges for the brachytherapy source using HCPCS code C2636 (Brachytherapy linear, non-stranded, palladium-103). However, the commenter believed that providers experienced confusion regarding the appropriate reporting of HCPCS code C2636. The commenter stated that six hospitals reported charges using HCPCS code C2636 over the past 6 years, without purchasing a linear, non-stranded palladium-103 brachytherapy source. Moreover, the commenter believed that providers may have inappropriately reported charges using HCPCS code C2636, including instances where providers reported charges for the use of HCPCS code 2636 although acquisition of CivaString® had not been obtained when it became commercially available in CY 2013. In addition, the commenter stated that the National Correct Coding Initiative (NCCI) established a medically unlikely edit (MUE) for HCPCS code C2636 in the outpatient hospital setting for 150 mm, effective April 1, 2010. Subsequently, in November 2015, the manufacturer of CivaString® requested that the MUE be increased to 900 mm based on the recommended clinical usage of CivaString®. In response to that request, the NCCI increased the MUE to 600 mm, effective April 1, 2016. However, the commenter further stated that claims for the use of CivaString® with the appropriate number of units continued to be denied based on the MUE. Because of these concerns, the commenter requested that CMS establish a new HCPCS code to specifically describe the use of CivaString®, as well as an increase in the payment rate proposed to adequately pay for the costs of this brachytherapy source.

Response: Section 1833(t)(2)(h) of the Act requires that the Secretary create additional groups of covered outpatient department services that classify brachytherapy sources separately from other services in a manner reflecting the number, isotope, and radioactive intensity of such sources. As such, we believe that HCPCS code C2636 adequately describes the clinical properties of CivaString®. Therefore, it is not necessary and would be duplicative to create a separate group for another linear, non-stranded palladium-103 source.

HCPCS code C2636 has been active since January 1, 2005. In response to the commenter's concerns regarding hospitals that may have inappropriately reported charges using HCPCS code C2636 although acquisition of

CivaString® had not been obtained, as a matter of general policy, we rely on hospitals to report all HCPCS codes on claims accurately in accordance with their code descriptors and CPT and CMS instructions, as applicable, and to report charges on claims and charges and costs on their Medicare hospital cost reports appropriately. We stated in the CY 2011 OPPS/ASC final rule with comment period (75 FR 71838) that the quality and accuracy of reported units and charges significantly influence the geometric mean costs that are the basis for our payment rates, especially for low-volume items and services. Beyond our standard OPPS trimming methodology that we apply to those claims that have passed various types of claims processing edits, it is not our general policy to judge the accuracy of hospital coding and charging for purposes of ratesetting.

With regard to the MUE value, we note that the MUE for HCPCS code C2636 is a date-of-service edit. This means if billed units of service (UOS) for HCPCS code C2636 are denied based on the MUE value, the provider may appeal the denial. Medicare Administrative Contractors (MACs) may pay UOS in excess of the MUE value if medical record documentation supports medically reasonable and necessary UOS in excess of the MUE value. Therefore, we are not establishing a new HCPCS code for the use of CivaString® because we believe that HCPCS code C2636 adequately describes the clinical properties of CivaString®. We refer readers to the facility outpatient services MUE table, which is available on the CMS Web site at: *https://www.cms.gov/Medicare/Coding/NationalCorrectCodInitEd/MUE.html.*

Comment: One commenter acknowledged the proposed increased CY 2017 payment rate for brachytherapy sources described by HCPCS code C2616 (Brachytx, non-str, yttrium-90) in comparison to the CY 2016 payment rate, but continued to believe that the proposed CY 2017 payment rate would not adequately pay a hospital's true cost for purchasing the device. The commenter supported the proposed CY 2017 increase in the payment rate for HCPCS code C2616, but remained concerned that the limited increase in payment would not adequately pay for all costs incurred by the hospital such as storage, handling, and disposal costs. In addition, based on the commenter's analysis of Medicare Provider Analysis and Review (MedPAR) data, which contain data from claims for services provided to beneficiaries admitted to Medicare certified inpatient hospitals and skilled nursing facilities, the commenter noted that a few hospitals inconsistently or incorrectly reported revenue code assignments with incorrect facility charge data. As a result of the erroneous and/or inaccurate coding, the commenter believed that the claims data used for CY 2017 ratesetting are adversely affected, which resulted in the inadequate proposed payment rate for HCPCS code C2616. Based on these concerns, the commenter requested that CMS eliminate outlier data that is out of range of other accurately reporting facilities. Specifically, the commenter requested that CMS eliminate claims from facilities that report a purchase price of $1.00 or other costs dramatically less than the $16,000 selling price.

Response: As previously discussed, under the OPPS, we use cost-based weights to determine relative costliness for outpatient items and services. The relativity of weights is used to set APC payment rates for brachytherapy sources, not the invoice cost or list price. Therefore, under a prospective payment system based on relative weights, items and services may not be paid at 100 percent of the reported costs.

With regard to the commenter's analysis of MedPAR data on claims that reported HCPCS code C2616, we note that MedPAR data consolidate inpatient hospital or skilled nursing facility (SNF) claims data from the National Claims History (NCH) files into stay level records. Because MedPAR data do not include OPPS claims, it is incorrect for the commenter to conclude that the CY 2017 OPPS proposed payment rate is inadequate as a result of erroneous and/or inaccurate coding on inpatient hospital or SNF claims. We have no reason to believe that prospective payment rates based on outpatient claims data from those providers furnishing a brachytherapy source described by HCPCS code C2616 do not appropriately reflect the cost of that source to hospitals. Therefore, we are not excluding or eliminating any claims with paid lines for HCPCS code C2616 in ratesetting for CY 2017.

Comment: A few commenters expressed concern regarding the outpatient hospital claims data that CMS used to set the prospective payment rates for brachytherapy sources. The commenters stated that high dose rate (HDR) brachytherapy devices are renewable because the devices have a 90-day use span and are used in the treatment of multiple patients during this 90-day span. According to the commenters, the true cost of treatment involving brachytherapy sources depends on the number of patients treated by a hospital within a 90-day period, as well as the number of treatments required and the intensity of the treatments. For this reason, the commenters believed that it is difficult to establish fair and adequate prospective payment rates for brachytherapy sources. The commenters also noted that the brachytherapy source payment data continue to show huge variation in per unit cost across hospitals.

In addition, the commenters believed that CMS' claims data contain rank order anomalies, causing the usual cost relationship between the high activity palladium-103 source (HCPCS code C2635, Brachytherapy source, non-stranded, high activity, palladium-103, greater than 2.2 mci (NIST) per source) and the low activity palladium-103 sources (HCPCS code C2640, Brachytherapy source, stranded, palladium-103, per source and HCPCS code C2641, Brachytherapy source, non-stranded, palladium-103, per source) to be reversed. The commenters noted that the proposed geometric mean costs of the brachytherapy source HCPCS codes are approximately $26, $77, and $70, respectively. The commenters stated that, based on their experience, stranded palladium-103 sources (HCPCS code C2640) always cost more than non-stranded palladium-103 sources (HCPCS code C2641), which was not reflected in the proposed rule claims data that CMS used.

In addition, the commenters expressed concern that payment for several brachytherapy sources are unstable and fluctuate significantly since CMS implemented the prospective payment methodology based on source-specific median cost in CY 2010 and geometric mean unit cost in CY 2013.

As a result of these concerns, the commenters requested that CMS adopt policies that more accurately account for the costs associated with HDR brachytherapy treatment delivery and to limit the overall fluctuation in payment for brachytherapy devices.

Response: We have received similar public comments regarding payment rates for HDR brachytherapy sources, payment rates for low and high activity palladium sources, and the year-to-year variation in payment rates for most brachytherapy sources in response to prior proposed rules and have addressed these public comments in prior final rules with comment period. We refer readers to 72 FR 66782; 74 FR 60534; 75 FR 71979; 76 FR 74161; 77 FR 68241; 78 FR 74861; 79 FR 66796; and 80 FR 70324 for our past responses to these similar comments. In these rules, we explain the characteristics of a

prospective payment system and how low-volume services are more susceptible to payment volatility compared to high-volume services. We also describe our expectation for how hospitals should treat HDR brachytherapy sources that can be used on multiple patients during its use span. In addition, we address concerns on varied cost distributions and their impact on the observed relationship in geometric mean cost between the different types of sources.

After consideration of the public comments we received, we are finalizing our proposal to continue to set the payment rates for brachytherapy sources using our established prospective payment methodology, which is based on geometric mean costs. In addition, we are finalizing our proposal to assign new status indicator ''E2'' to HCPCS code C2644 because there are no CY 2015 claims reporting use of this code and, therefore, we are unable to determine a payment rate for CY 2017.

The final CY 2017 payment rates for brachytherapy sources are included in Addendum B to this final rule with comment period (which is available via the Internet on the CMS Web site) and are identified with status indicator ''U''.

We continue to invite hospitals and other parties to submit recommendations to us for new codes to describe new brachytherapy sources. Such recommendations should be directed to the Division of Outpatient Care, Mail Stop C4–01–26, Centers for Medicare and Medicaid Services, 7500 Security Boulevard, Baltimore, MD 21244. We will continue to add new brachytherapy source codes and descriptors to our systems for payment on a quarterly basis.

c. Comprehensive APCs (C–APCs) for CY 2017

(1) Background

In the CY 2014 OPPS/ASC final rule with comment period (78 FR 74861 through 74910), we finalized a comprehensive payment policy that packages payment for adjunctive and secondary items, services, and procedures into the most costly primary procedure under the OPPS at the claim level. The policy was finalized in CY 2014, but the effective date was delayed until January 1, 2015, to allow additional time for further analysis, opportunity for public comment, and systems preparation. The comprehensive APC (C–APC) policy was implemented effective January 1, 2015, with modifications and clarifications in response to public comments received regarding specific provisions of the C–APC policy (79 FR 66798 through 66810).

A C–APC is defined as a classification for the provision of a primary service and all adjunctive services provided to support the delivery of the primary service. We established C–APCs as a category broadly for OPPS payment and implemented 25 C–APCs beginning in CY 2015 (79 FR 66809 through 66810). In the CY 2016 OPPS/ASC final rule with comment period (80 FR 70332), we finalized 10 additional C–APCs to be paid under the existing C–APC payment policy.

Under this policy, we designated a service described by a HCPCS code assigned to a C–APC as the primary service when the service is identified by OPPS status indicator ''J1''. When such a primary service is reported on a hospital outpatient claim, taking into consideration the few exceptions that are discussed below, we make payment for all other items and services reported on the hospital outpatient claim as being integral, ancillary, supportive, dependent, and adjunctive to the primary service (hereinafter collectively referred to as ''adjunctive services'') and representing components of a complete comprehensive service (78 FR 74865 and 79 FR 66799). Payments for adjunctive services are packaged into the payments for the primary services. This results in a single prospective payment for each of the primary, comprehensive services based on the costs of all reported services at the claim level.

Services excluded from the C–APC policy include services that are not covered OPD services, services that cannot by statute be paid for under the OPPS, and services that are required by statute to be separately paid. This includes certain mammography and ambulance services that are not covered OPD services in accordance with section 1833(t)(1)(B)(iv) of the Act; brachytherapy seeds, which also are required by statute to receive separate payment under section 1833(t)(2)(H) of the Act; pass-through drugs and devices, which also require separate payment under section 1833(t)(6) of the Act; self-administered drugs (SADs) that are not otherwise packaged as supplies because they are not covered under Medicare Part B under section 1861(s)(2)(B) of the Act; and certain preventive services (78 FR 74865 and 79 FR 66800 through 66801). A list of services excluded from the C–APC policy is included in Addendum J to this final rule with comment period (which is available via the Internet on the CMS Web site).

The C–APC policy payment methodology set forth in the CY 2014 OPPS/ASC final rule with comment period for the C–APCs and modified and implemented beginning in CY 2015 is summarized as follows (78 FR 74887 and 79 FR 66800):

Basic Methodology. As stated in the CY 2015 OPPS/ASC final rule with comment period, we define the C–APC payment policy as including all covered OPD services on a hospital outpatient claim reporting a primary service that is assigned to status indicator ''J1,'' excluding services that are not covered OPD services or that cannot by statute be paid for under the OPPS. Services and procedures described by HCPCS codes assigned to status indicator ''J1'' are assigned to C–APCs based on our usual APC assignment methodology by evaluating the geometric mean costs of the primary service claims to establish resource similarity and the clinical characteristics of each procedure to establish clinical similarity within each APC. In the CY 2016 OPPS/ASC final rule with comment period, we expanded the C–APC payment methodology with the establishment of status indicator ''J2''. The assignment of status indicator ''J2'' to a specific combination of services performed in combination with each other, as opposed to a single, primary service, allows for all other OPPS payable services and items reported on the claim (excluding services that are not covered OPD services or that cannot by statute be paid for under the OPPS) to be deemed adjunctive services representing components of a comprehensive service and resulting in a single prospective payment for the comprehensive service based on the costs of all reported services on the claim (80 FR 70333 through 70336).

Services included under the C–APC payment packaging policy, that is, services that are typically adjunctive to the primary service and provided during the delivery of the comprehensive service, include diagnostic procedures, laboratory tests, and other diagnostic tests and treatments that assist in the delivery of the primary procedure; visits and evaluations performed in association with the procedure; uncoded services and supplies used during the service; durable medical equipment as well as prosthetic and orthotic items and supplies when provided as part of the outpatient service; and any other components reported by HCPCS codes that represent services that are provided during the complete comprehensive service (78 FR 74865 and 79 FR 66800).

In addition, payment for outpatient department services that are similar to therapy services and delivered either by therapists or non-therapists is included as part of the payment for the packaged complete comprehensive service. These services that are provided during the perioperative period are adjunctive services and are deemed to be not therapy services as described in section 1834(k) of the Act, regardless of whether the services are delivered by therapists or other nontherapist health care workers. We have previously noted that therapy services are those provided by therapists under a plan of care in accordance with section 1835(a)(2)(C) and section 1835(a)(2)(D) of the Act and are paid for under section 1834(k) of the Act, subject to annual therapy caps as applicable (78 FR 74867 and 79 FR 66800). However, certain other services similar to therapy services are considered and paid for as outpatient department services. Payment for these non-therapy outpatient department services that are reported with therapy codes and provided with a comprehensive service is included in the payment for the packaged complete comprehensive service. We note that these services, even though they are reported with therapy codes, are outpatient department services and not therapy services.

Therefore, the requirement for functional reporting under the regulations at 42 CFR 410.59(a)(4) and 42 CFR 410.60(a)(4) does not apply. We refer readers to the July 2016 OPPS Change Request 9658 (Transmittal 3523) for further instructions on reporting these services in the context of a C–APC service.

Items included in the packaged payment provided in conjunction with the primary service also include all drugs, biologicals, and radiopharmaceuticals, regardless of cost, except those drugs with pass-through payment status and SADs, unless they function as packaged supplies (78 FR 74868 through 74869 and 74909 and 79 FR 66800). We refer readers to Section 50.2M, Chapter 15, of the Medicare Benefit Policy Manual for a description of our policy on SADs treated as hospital outpatient supplies, including lists of SADs that function as supplies and those that do not function as supplies.

We define each hospital outpatient claim reporting a single unit of a single primary service assigned to status indicator ''J1'' as a single ''J1'' unit procedure claim (78 FR 74871 and 79 FR 66801). We sum all line item charges for services included on the C–APC claim, convert the charges to costs, and calculate the comprehensive geometric mean cost of one unit of each service assigned to status indicator ''J1.'' (We note that we use the term ''comprehensive'' to describe the geometric mean cost of a claim reporting ''J1'' service(s) or the geometric mean cost of a C–APC, inclusive of all of the items and services included in the C–APC service payment bundle.) Charges for services that would otherwise be separately payable are added to the charges for the primary service. This process differs from our traditional cost accounting methodology only in that all such services on the claim are packaged (except certain services as described above). We apply our standard data trims, excluding claims with extremely high primary units or extreme costs.

The comprehensive geometric mean costs are used to establish resource similarity and, along with clinical similarity, dictate the assignment of the primary services to the C–APCs. We establish a ranking of each primary service (single unit only) to be assigned to status indicator ''J1'' according to their comprehensive geometric mean costs. For the minority of claims reporting more than one primary service assigned to status indicator ''J1'' or units thereof, we identify one ''J1'' service as the primary service for the claim based on our cost-based ranking of primary services. We then assign these multiple ''J1'' procedure claims to the C–APC to which the service designated as the primary service is assigned. If the reported ''J1'' services reported on a claim map to different C–APCs, we designate the ''J1'' service assigned to the C–APC with the highest comprehensive geometric mean cost as the primary service for that claim. If the reported multiple ''J1'' services on a claim map to the same C–APC, we designate the most costly service (at the HCPCS code level) as the primary service for that claim. This process results in initial assignments of claims for the primary services assigned to status indicator ''J1'' to the most appropriate C–APCs based on both single and multiple procedure claims reporting these services and clinical and resource homogeneity.

Complexity Adjustments. We use complexity adjustments to provide increased payment for certain comprehensive services. We apply a complexity adjustment by promoting qualifying ''J1'' service code combinations or code combinations of ''J1'' services and certain add-on codes (as described further below) from the originating C–APC (the C–APC to which the designated primary service is first assigned) to the next higher paying C–APC in the same clinical family of C–APCs. We implement this type of complexity adjustment when the code combination represents a complex, costly form or version of the primary service according to the following criteria:

- Frequency of 25 or more claims reporting the code combination (frequency threshold); and
- Violation of the 2 times rule in the originating C–APC (cost threshold).

After designating a single primary service for a claim, we evaluate that service in combination with each of the other procedure codes reported on the claim assigned to status indicator ''J1'' (or certain add-on codes) to determine if they meet the complexity adjustment criteria. For new HCPCS codes, we determine initial C–APC assignments and complexity adjustments using the best available information, crosswalking the new HCPCS codes to predecessor codes when appropriate.

Once we have determined that a particular code combination of ''J1'' services (or combinations of ''J1'' services reported in conjunction with certain add-on codes) represents a complex version of the primary service because it is sufficiently costly, frequent, and a subset of the primary comprehensive service overall according to the criteria described above, we promote the complex version of the primary service as described by the code combination to the next higher cost C–APC within the clinical family unless the primary service is already assigned to the highest cost APC within the C–APC clinical family or assigned to the only C–APC in a clinical family. We do not create new APCs with a comprehensive geometric mean cost that is higher than the highest geometric mean cost (or only) C–APC in a clinical family just to accommodate potential complexity adjustments. Therefore, the highest payment for any code combination for services assigned to a C–APC would be the highest paying C–APC in the clinical family (79 FR 66802).

We package payment for all add-on codes into the payment for the C–APC. However, certain primary service-add-on combinations may qualify for a complexity adjustment. As noted in the CY 2016 OPPS/ASC final rule with comment period (80 FR 70331), all add-on codes that can be appropriately reported in combination with a base code that describes a primary ''J1''service are evaluated for a complexity adjustment.

To determine which combinations of primary service codes reported in conjunction with an add-on code may

qualify for a complexity adjustment for CY 2017, in the CY 2017 OPPS/ASC proposed rule (81 FR 45620), we proposed to apply the frequency and cost criteria thresholds discussed above, testing claims reporting one unit of a single primary service assigned to status indicator ''J1'' and any number of units of a single add-on code. If the frequency and cost criteria thresholds for a complexity adjustment are met, and reassignment to the next higher cost APC in the clinical family is appropriate, we make a complexity adjustment for the code combination; that is, we reassign the primary service code reported in conjunction with the add-on code combination to a higher cost C–APC within the same clinical family of C–APCs. If any add-on code combination reported in conjunction with the primary service code does not qualify for a complexity adjustment, payment for these services is packaged within the payment for the complete comprehensive service. We listed the complexity adjustments proposed for add-on code combinations for CY 2017, along with all of the other proposed complexity adjustments, in Addendum J to the proposed rule (which is available via the Internet on the CMS Web site). For CY 2017, we proposed to discontinue the requirement that a code combination (that qualifies for a complexity adjustment by satisfying the frequency and cost criteria thresholds described earlier) also not create a 2 times rule violation in the higher level or receiving APC (80 FR 70328). We believe that this requirement is not useful because most code combinations fall below our established frequency threshold for considering 2 times rule violations, which is described in section III.B. of this final rule with comment period. Therefore, because the 2 times rule would not typically apply to complexity-adjusted code combinations, we proposed to discontinue this requirement.

We provided in Addendum J to the proposed rule a breakdown of cost statistics for each code combination that would qualify for a complexity adjustment (including primary code and add-on code combinations). Addendum J to the proposed rule also contained summary cost statistics for each of the code combinations that describe a complex code combination that would qualify for a complexity adjustment and are proposed to be reassigned to the next higher cost C–APC within the clinical family. The combined statistics for all proposed reassigned complex code combinations are represented by an alphanumeric code with the first 4 digits of the designated primary service followed by a letter. For example, the proposed geometric mean cost listed in Addendum J for the code combination described by complexity adjustment assignment 3320R, which is assigned to C–APC 5224 (Level 4 Pacemaker and Similar Procedures), includes all code combinations that are proposed to be reassigned to C–APC 5224 when CPT code 33208 is the primary code. Providing the information contained in Addendum J to the proposed rule allowed stakeholders the opportunity to better assess the impact associated with the proposed reassignment of each of the code combinations eligible for a complexity adjustment.

Comment: Commenters generally supported the proposal to no longer require that a code combination (that qualifies for a complexity adjustment by satisfying the frequency and cost criteria thresholds) be evaluated for a 2 times rule violation in the higher level or receiving APC. One commenter requested that CMS allow the complexity-adjusted pair to move up an additional level in the clinical family if the code combination creates a 2 times rule violation in the receiving APC. Several other commenters requested that CMS review and modify the established C–APC complexity adjustment criteria to allow for complexity adjustments for specific ''J1'' service code combinations or code combinations of ''J1'' services and certain add-on codes that do not qualify under the current criteria.

Response: We appreciate the commenters' support. We continue to believe that the complexity adjustment criteria, which require a frequency of 25 or more claims reporting a code combination and a violation of the 2 times rule in the originating C–APC in order to receive payment in the next higher cost C–APC within the clinical family, is adequate to determine if a combination of procedures represents a complex, costly subset of the primary service. If a code combination meets these criteria, the combination receives payment at the next higher cost C–APC. Code combinations that do not meet these criteria receive the C–APC payment rate associated with the primary ''J1'' service. A minimum of 25 claims is already very low for a national payment system. Lowering the minimum of 25 claims further could lead to unnecessary complexity adjustments for service combinations that are rarely performed. The complexity adjustment cost threshold compares the code combinations to the lowest cost significant procedure assigned to the APC. If the cost of the code combination does not exceed twice the cost of the lowest cost significant procedure within the APC, no complexity adjustment is made. Lowering this threshold also could remove too many claims from the accounting for the primary J1 service, which would undermine the C–APC policy. We are finalizing the policy proposal to discontinue the requirement that a code combination (that qualifies for a complexity adjustment by satisfying the frequency and cost criteria thresholds) also not create a 2 times rule violation in the higher level or receiving APC as proposed. We are not otherwise changing the complexity adjustment criteria.

Comment: Other commenters requested that CMS ensure that claims for bilateral C–APC procedures that are correctly reported with modifier ''50'' (a modifier used to report bilateral procedures that are performed at the same operative session as a single line item) are accounted for in the evaluation of complexity adjustments, as well as the C–APC claims accounting. The commenters believed that these claims should be recognized as reporting two units of the service in the evaluation of the frequency of the code combination and the payment of the complexity-adjusted C–APC rate.

Response: The issue of complexity adjustments for bilateral, status indicator ''J1'' procedures reported with modifier ''50'' was addressed in the April 2016 Integrated OCE Specifications Quarterly Release Files (Attachment A—Integrated OCE Specs, Appendix L: Comprehensive APC Assignment Logic). In that document, the C–APC assignment logic was updated to specify the following: Once the highest ranked comprehensive procedure is determined, if there are multiple comprehensive procedures present with status indicator ''J1'' or there are qualifying add-on procedure codes present (status indicator ''N''), determine if there are any pairings that may qualify for a complexity adjustment. Multiple occurrences or service units of the same comprehensive procedure, or the reporting of modifier ''50,'' may qualify for a complexity adjustment. If there is a qualifying pair present associated with the highest ranked comprehensive procedure, assign the complexity-adjusted comprehensive APC. This change was made retroactive to January 2015. As of January 1, 2015, status indicator ''J1'' procedure claims with modifier ''50'' also will be included in the C–APC claims accounting and the complexity adjustment evaluations.

Comment: One commenter requested that CMS eliminate one of the criterion for assignment to status indicator ''J2'' and C–APC 8011 (Comprehensive Observation Services). Specifically, the commenter stated that claims that otherwise would qualify for payment through C–APC 8011, but contain a procedure described by a HCPCS code assigned to status indicator ''T'' that is reported with a date of service on the same day or 1 day earlier than the date of service associated with services described by HCPCS code G0378, should not be excluded from receiving payment through C–APC 8011.

Response: Services that would otherwise qualify for the observation C–APC (C–APC 8011) are not considered to be observation services when they are associated with a surgical procedure (assigned to status indicator ''T''). Instead, they are considered to be perioperative recovery, which is always packaged in with the surgical procedure.

Comment: Some commenters submitted comments regarding C–APC 5627 (Level 7 Radiation Therapy) and the treatment planning and preparation services involved with stereotactic radiosurgery (SRS) treatment. Commenters urged CMS to continue the policy finalized in the CY 2016 OPPS/ASC final rule with comment period (80 FR 70337) that pays separately for certain SRS planning and preparation services (a policy that is a temporary special exception for APC 5627 to the C–APC packaging policy that packages all adjunctive services (with a few exceptions listed in Addendum J)). Commenters believed that CMS should not package treatment planning and preparation into the C–APC payment rate for Level 7 Radiation Therapy in the future as discussed in the CY 2016 OPPS/ASC final rule with comment period because SRS claims may include other unrelated radiation therapy services.

Response: For CY 2017, we will continue the policy for the payment of SRS treatment as described in the CY 2016 OPPS/ASC final rule with comment period (80 FR 70337). This policy removes claims reporting certain planning and preparation services for SRS treatment from our geometric mean cost calculation for the CY 2017 payment rate for C–APC 5627 and pays separately for these planning and preparation services. For 2018, we will again examine the claims for cranial single session SRS patients and evaluate the services reported with modifier ''CT'' (Adjunctive service related to a procedure assigned to a comprehensive ambulatory payment classification [C–APC] procedure). We will consider in the future whether repackaging all adjunctive services (planning, preparation, and imaging, among others) back into cranial single session SRS is appropriate in order to preserve the integrity of the C–APC policy and the OPPS as a prospective payment system.

Comment: Commenters noted that claims that included several insertion codes for brachytherapy devices (namely CPT codes 57155, 20555, 31643, 41019, 43241, 55920, and 58346) often did not also contain a brachytherapy treatment delivery code. The commenters concluded that brachytherapy delivery charges are being underrepresented in ratesetting under the C–APC methodology because a correctly coded claim should always include an insertion and treatment delivery code combination. One commenter suggested that CMS adopt a composite APC methodology for CPT code 57155 similar to the composite methodology for LDR prostate brachytherapy services.

Response: The calculation of OPPS relative payment weights that reflect the relative resources required for HOPD services is the foundation of the OPPS. We rely on hospitals to bill all HCPCS codes accurately in accordance with their code descriptors and CPT and CMS instructions, as applicable, and to report charges on claims and charges and costs on their Medicare hospital cost reports appropriately (77 FR 68324). Moreover, we generally do not remove claims from the claims accounting when stakeholders believe that hospitals included incorrect information on some claims. Therefore, we are not excluding claims from the ratesetting calculation that include procedures described by CPT codes 57155, 20555, 31643, 41019, 43241, 55920, and 58346. In the future, we will examine the claims for these brachytherapy insertion codes and determine if any future adjustment to the methodology (or possibly code edits) would be appropriate.

(2) C–APCs for CY 2017

(a) Additional C–APCs for CY 2017

For CY 2017 and subsequent years, in the CY 2017 OPPS/ASC proposed rule (81 FR 45620), we proposed to continue to apply the C–APC payment policy methodology made effective in CY 2015, as described in detail below. We proposed to continue to define the services assigned to C–APCs as primary services or a specific combination of services performed in combination with each other. We also proposed to define a C–APC as a classification for the provision of a primary service or specific combination of services and all adjunctive services and supplies provided to support the delivery of the primary or specific combination of services. We also proposed to continue to follow the C–APC payment policy methodology of packaging all covered OPD services on a hospital outpatient claim reporting a primary service that is assigned to status indicator ''J1'' or reporting the specific combination of services assigned to status indicator ''J2,'' excluding services that are not covered OPD services or that cannot by statute be paid under the OPPS.

As a result of our annual review of the services and APC assignments under the OPPS, we proposed 25 additional C–APCs to be paid under the existing C–APC payment policy beginning in CY 2017. The proposed additional CY 2017 C–APCs were listed in Table 2 of the proposed rule. All C–APCs, including those effective in CY 2016 and those being proposed for CY 2017, also were displayed in Addendum J to this proposed rule. Addendum J to this proposed rule (which is available via the Internet on the CMS Web site) also contained all of the data related to the C–APC payment policy methodology, including the list of proposed complexity adjustments and other information.

Comment: Many commenters supported the proposal to expand the C–APC policy to include new C–APCs. However, several commenters requested that CMS delay the expansion of the C–APC policy and expressed concerns that the costs of procedures and services paid through a C–APC are not being accurately captured and C–APC payment rates do not adequately cover the costs associated with the primary and adjunctive services. Commenters also requested more information regarding the rationale for the assignment of services to a C–APC and stated that more time is needed to analyze and assess the financial impact of the proposed C–APC policy changes. One commenter expressed concerns that CMS may not be fully considering the impact of adding relatively low cost (below $2,227) procedures to C–APCs and suggested the establishment of a minimum cost threshold for a procedure to be assigned to a C–APC. Other commenters requested a delay in the assignment of new codes, including add-on codes, to C–APCs unless a crosswalk exists from the old code to the new code.

Response: We appreciate the commenters' support. With regard to the comments relating to delaying the expansion of the C–APC policy, we do

not believe that we should delay implementation of the proposed CY 2017 C–APCs. C–APCs were introduced in 2015, and, like all of the payment polices contained in the OPPS, are reviewed annually, as provided at section 1833(t)(9)(A) of the Act. We communicate with various stakeholders on an ongoing basis as a part of our mutual efforts to further improve the OPPS. We believe that sufficient information is available for stakeholders to evaluate how C–APCs affect payment for services, and that there is sufficient time for the public to review and analyze our proposed payment policies. This is evidenced by the many stakeholders that submit public comments, including, for example, analyses of the C–APC payment policy. Regarding the comment about creating a cost threshold for assignment of a procedure to a C–APC, we do not believe that this is necessary. Procedures assigned to C–APCs are primary services (mostly major surgical procedures) that are typically the focus of the hospital outpatient stay. We do not believe that a cost threshold would help to differentiate primary from secondary or adjunctive services. Lastly, we assign new codes to APCs (including C–APCs) based on predecessor code APC assignments, comparisons to similar codes, clinical comparability, and estimates of the resource intensity, as well as other relevant information. If we failed to assign new codes to C–APCs, this could result in significant underpayment for some new codes if a C–APC is the most appropriate APC for the new procedure.

Comment: A few commenters requested that CMS not convert APCs 5153 through 5155 (Levels 3 through 5 Airway Endoscopy) into C–APCs. The commenters expressed concerns regarding reduced payments for sinus surgeries when a patient has multiple surgeries during a single operative session. The major concern focused on the loss of additional payments for multiple procedures under the C–APC methodology. Commenters stated that multiple procedures (coded either as a bilateral case or with multiple different CPT codes) are common for the treatment of sinus diseases. One commenter noted that the AMA CPT Editorial Panel is in the process of revising some of the sinus surgery codes and bundling some of these codes. Another commenter believed that payment reductions for sinus surgery could negatively affect opportunities for resident training on these procedures.

Response: The commenters concerns are not unique to sinus surgery. The C–APC methodology relies on the average cost of the range of cases included in the claims accounting for the primary service code. We believe that this approach is better suited to a prospective payment system like the OPPS that relies on average cost payments that sometimes exceed the cost of a given case and other times are less than the cost of a given case. If, as the commenters suggest, bilateral surgery and/or multiple procedures are common in sinus surgery, the costs of this approach would be reflected in the geometric mean cost of the primary procedure under the C–APC methodology. It also seems that, according to one commenter, the AMA is preparing to address what might be fragmented codes in this clinical area. We are finalizing as proposed the conversion of the three highest level airway endoscopy APCs to C–APCs as a part of our continuing effort to direct the OPPS more towards a prospective payment system and away from a per service or per code fee schedule in which every coded item or service results in additional payment. We also do not agree that this payment policy raises concerns regarding the training of otolaryngology residents in sinus surgery, but we will monitor these APCs as we do with all others as a part of our annual OPPS/ASC rulemaking.

Comment: One commenter stated that while APC 5153 (Level 3 Airway Endoscopy Procedures) is a proposed C–APC for CY 2017, one of the codes assigned to APC 5153, namely CPT code 31649 (Bronchoscopy, rigid or flexible, including fluoroscopic guidance, when performed; with removal of bronchial valve(s), each additional lobe (List separately in addition to code for primary procedure)), is assigned a status indicator of ''Q2'' and not ''J1.'' The commenter requested that this procedure be assigned to status indicator ''J1.''

Response: This procedure is assigned status indicator ''Q2'' because it describes the removal of a device, specifically a bronchial valve. In the CY 2014 OPPS/ASC final rule with comment period (78 FR 74926), we finalized a proposal to conditionally package device removal procedures. This procedure is separately paid unless it is billed on the same date of service as a surgical procedure assigned to status indicator ''J1'' or ''T'' that involves repair or replacement of the device. The procedure was placed in a C–APC on the basis of resource and clinical homogeneity. For these reasons, we do not agree with the commenters, and are not assigning CPT code 31649 to status indicator ''J1.''

After consideration of the public comments we received, we are finalizing the proposal for 25 additional C–APCs to be paid under the existing C–APC payment policy beginning in CY 2017.

Table 2 below lists the final additional C–APCs for CY 2017, including the C–APCs currently effective for CY 2016. All C–APCs, including those effective in CY 2016 and those finalized for CY 2017, also are displayed in Addendum J to this final rule with comment period. Addendum J to this final rule with comment period (which is available via the Internet on the CMS Web site) also contains all of the data related to the C–APC payment policy methodology, including the list of complexity adjustments and other information.

TABLE 1—CY 2017 C–APCS

C–APC	CY 2017 APC title	Clinical family	New C–APC
5072	Level 2 Excision/Biopsy/Incision and Drainage	EBIDX	*
5073	Level 3 Excision/Biopsy/Incision and Drainage	EBIDX	*
5091	Level 1 Breast/Lymphatic Surgery and Related Procedures	BREAS	*
5092	Level 2 Breast/Lymphatic Surgery and Related Procedures	BREAS	*
5093	Level 3 Breast/Lymphatic Surgery & Related Procedures	BREAS	
5094	Level 4 Breast/Lymphatic Surgery & Related Procedures	BREAS	
5112	Level 2 Musculoskeletal Procedures	ORTHO	*
5113	Level 3 Musculoskeletal Procedures	ORTHO	*
5114	Level 4 Musculoskeletal Procedures	ORTHO	
5115	Level 5 Musculoskeletal Procedures	ORTHO	
5116	Level 6 Musculoskeletal Procedures	ORTHO	

TABLE 1—CY 2017 C–APCS—Continued

C–APC	CY 2017 APC title	Clinical family	New C–APC
5153	Level 3 Airway Endoscopy	AENDO	*
5154	Level 4 Airway Endoscopy	AENDO	*
5155	Level 5 Airway Endoscopy	AENDO	*
5164	Level 4 ENT Procedures	ENTXX	*
5165	Level 5 ENT Procedures	ENTXX	
5166	Cochlear Implant Procedure	COCHL	
5191	Level 1 Endovascular Procedures	VASCX	*
5192	Level 2 Endovascular Procedures	VASCX	
5193	Level 3 Endovascular Procedures	VASCX	
5194	Level 4 Endovascular Procedures	VASCX	
5200	Implantation Wireless PA Pressure Monitor	WPMXX	*
5211	Level 1 Electrophysiologic Procedures	EPHYS	
5212	Level 2 Electrophysiologic Procedures	EPHYS	
5213	Level 3 Electrophysiologic Procedures	EPHYS	
5222	Level 2 Pacemaker and Similar Procedures	AICDP	
5223	Level 3 Pacemaker and Similar Procedures	AICDP	
5224	Level 4 Pacemaker and Similar Procedures	AICDP	
5231	Level 1 ICD and Similar Procedures	AICDP	
5232	Level 2 ICD and Similar Procedures	AICDP	
5244	Level 4 Blood Product Exchange and Related Services	SCTXX	*
5302	Level 2 Upper GI Procedures	GIXXX	*
5303	Level 3 Upper GI Procedures	GIXXX	*
5313	Level 3 Lower GI Procedures	GIXXX	*
5331	Complex GI Procedures	GIXXX	
5341	Abdominal/Peritoneal/Biliary and Related Procedures	GIXXX	*
5361	Level 1 Laparoscopy & Related Services	LAPXX	
5362	Level 2 Laparoscopy & Related Services	LAPXX	
5373	Level 3 Urology & Related Services	UROXX	*
5374	Level 4 Urology & Related Services	UROXX	*
5375	Level 5 Urology & Related Services	UROXX	
5376	Level 6 Urology & Related Services	UROXX	
5377	Level 7 Urology & Related Services	UROXX	
5414	Level 4 Gynecologic Procedures	GYNXX	*
5415	Level 5 Gynecologic Procedures	GYNXX	
5416	Level 6 Gynecologic Procedures	GYNXX	
5431	Level 1 Nerve Procedures	NERVE	*
5432	Level 2 Nerve Procedures	NERVE	*
5462	Level 2 Neurostimulator & Related Procedures	NSTIM	
5463	Level 3 Neurostimulator & Related Procedures	NSTIM	
5464	Level 4 Neurostimulator & Related Procedures	NSTIM	
5471	Implantation of Drug Infusion Device	PUMPS	
5491	Level 1 Intraocular Procedures	INEYE	*
5492	Level 2 Intraocular Procedures	INEYE	
5493	Level 3 Intraocular Procedures	INEYE	
5494	Level 4 Intraocular Procedures	INEYE	
5495	Level 5 Intraocular Procedures	INEYE	
5503	Level 3 Extraocular, Repair, and Plastic Eye Procedures	EXEYE	*
5504	Level 4 Extraocular, Repair, and Plastic Eye Procedures	EXEYE	*
5627	Level 7 Radiation Therapy	RADTX	
5881	Ancillary Outpatient Services When Patient Dies	N/A	
8011	Comprehensive Observation Services	N/A	

* New C–APC for CY 2017.

C–APC Clinical Family Descriptor Key: AENDO = Airway Endoscopy; AICDP = Automatic Implantable Cardiac Defibrillators, Pacemakers, and Related Devices; BREAS = Breast Surgery; COCHL = Cochlear Implant; EBIDX = Excision/Biopsy/Incision and Drainage; ENTXX = ENT Procedures; EPHYS = Cardiac Electrophysiology; EXEYE = Extraocular Ophthalmic Surgery; GIXXX = Gastrointestinal Procedures; GYNXX = Gynecologic Procedures; INEYE = Intraocular Surgery; LAPXX = Laparoscopic Procedures; NERVE = Nerve Procedures; NSTIM = Neurostimulators; ORTHO = Orthopedic Surgery; PUMPS = Implantable Drug Delivery Systems; RADTX = Radiation Oncology; SCTXX = Stem Cell Transplant; UROXX = Urologic Procedures; VASCX = Vascular Procedures; WPMXX = Wireless PA Pressure Monitor.

(b) New Allogeneic Hematopoietic Stem Cell Transplantation (HSCT) C–APC

Allogeneic hematopoietic stem cell transplantation (HSCT) involves the intravenous infusion of hematopoietic stem cells derived from the bone marrow, umbilical cord blood, or peripheral blood of a donor to a recipient. Allogeneic hematopoietic stem cell collection procedures, which are performed not on the beneficiary but on a donor, cannot be paid separately under the OPPS because hospitals may bill and receive payment only for services provided to a Medicare beneficiary who is the recipient of the HSCT and whose illness is being treated with the transplant. Currently, under the OPPS, payment for these acquisition services is packaged into the APC payment for the allogeneic HSCT when the transplant occurs in the hospital outpatient setting (74 FR 60575). In the CY 2016 OPPS/ASC final rule with comment period, we assigned allogeneic HSCT to APC 5281 (Apheresis and Stem

Cell Procedures), which has a CY 2016 OPPS payment rate of $3,015.

As provided in the Medicare Claims Processing Manual, Pub. 100–04, Chapter 4, section 231.11, donor acquisition charges for allogeneic HSCT may include, but are not limited to, charges for the costs of several services. These services include, but are not necessarily limited to, National Marrow Donor Program fees, if applicable, tissue typing of donor and recipient, donor evaluation, physician pre-procedure donor evaluation services, costs associated with the collection procedure (for example, general routine and special care services, procedure/operating room and other ancillary services, apheresis services, among others), post-operative/post-procedure evaluation of donor, and the preparation and processing of stem cells.

When the allogeneic stem cell transplant occurs in the hospital outpatient setting, providers are instructed to report stem cell donor acquisition charges for allogeneic HSCT separately in Field 42 on Form CMS–1450 (or UB–04) by using revenue code 0819 (Organ Acquisition: Other Donor). Revenue code 0819 charges should include all services required to acquire hematopoietic stem cells from a donor, as defined earlier, and should be reported on the same date of service as the transplant procedure in order to be appropriately packaged for payment purposes. Revenue code 0819 maps to cost center code 086XX (Other organ acquisition where XX is ''00'' through ''19'') and is reported on line 112 (or applicable subscripts of line 112) of the Medicare cost report.

In recent years, we have received comments from stakeholders detailing concerns about the accuracy of ratesetting for allogeneic HSCT (79 FR 40950 through 40951; 79 FR 66809; and 80 FR 70414 through 70415). Stakeholders have presented several issues that could result in an inappropriate estimation of provider costs for these procedures, including outpatient allogeneic HCST reported on claims being identified as multiple procedure claims that are unusable under the standard OPPS ratesetting methodology. Stakeholders also have indicated that the requirement for the reporting of revenue code 0819 on claims reporting allogeneic HSCTs and the lack of a dedicated cost center for stem cell transplantation donor acquisition costs have led to an overly broad CCR being applied to these procedures, which comprise a very low volume of the services reported within the currently assigned cost center. In addition, commenters noted that it is likely that there are services being reported with the same revenue code (0819) and mapped to the same cost center code (086XX) as allogeneic HSCT donor acquisition charges that are unrelated to these services. Lastly, providers have commented that the donor acquisition costs of allogeneic HSCT are much higher relative to their charges when compared to the other items and services that are reported in the current cost center. Providers also have stated that hospitals have difficulty applying an appropriate markup to donor acquisition charges that will sufficiently generate a cost that approximates the total cost of donor acquisition. Through our examination of the CY 2016 claims data, we believe that the issues presented above provide a persuasive rationale for payment adjustment for donor acquisition costs for allogeneic HCST.

Stakeholders suggested that the establishment of a C–APC for stem cell transplant services would improve payment adequacy by allowing the use of multiple procedure claims, provided CMS also create a separate and distinct CCR for donor search and acquisition charges so that they are not diluted by lower cost services. In the CY 2016 OPPS/ASC final rule with comment period (80 FR 70414 through 70415), we stated that we would not create a new C–APC for stem cell transplant procedures at that time and that we would instead continue to pay for the services through the assigned APCs while continuing to monitor the issue.

Based on our current analysis of this longstanding issue and stakeholder input, in the CY 2017 OPPS/ASC proposed rule (81 FR 45623), for CY 2017, we proposed to create a new C–APC 5244 (Level 4 Blood Product Exchange and Related Services) and to assign procedures described by CPT code 38240 (Hematopoietic progenitor cell (HPC); allogeneic transplantation per donor) to this C–APC and to assign status indicator ''J1'' to the code. The creation of a new C–APC for allogeneic HSCT and the assignment of status indicator ''J1'' to CPT code 38240 would allow for the costs for all covered OPD services, including donor acquisition services, included on the claim to be packaged into the C–APC payment rate. These costs also will be analyzed using our comprehensive cost accounting methodology to establish future C–APC payment rates. We proposed to establish a payment rate for proposed new C–APC 5244 of $15,267 for CY 2017.

In order to develop an accurate estimate of allogeneic HSCT donor acquisition costs for future ratesetting, for CY 2017 and subsequent years, we proposed to update the Medicare hospital cost report (Form CMS–2552–10) by adding a new standard cost center 112.50, ''Allogeneic Stem Cell Acquisition,'' to Worksheet A (and applicable worksheets) with the standard cost center code of ''11250.'' The proposed new cost center, line 112.50, would be used for the recording of any acquisition costs related to allogeneic stem cell transplants as defined in Section 231.11, Chapter 4, of the Medicare Claims Processing Manual (Pub. 100–04). Acquisition charges for allogeneic stem cell transplants apply only to allogeneic transplants for which stem cells are obtained from a donor (rather than from the recipient). Acquisition charges do not apply to autologous transplants (transplanted stem cells are obtained from the recipient) because autologous transplants involve services provided to a beneficiary only (and not to a donor), for which the hospital may bill and receive payment. Acquisition costs for allogeneic stem cells are included in the prospective payment. This cost center flows through cost finding and accumulates any appropriate overhead costs.

In conjunction with our proposed addition of the new ''Allogeneic Stem Cell Acquisition'' standard cost center, we proposed to use the newly created revenue code 0815 (Allogeneic Stem Cell Acquisition Services) to identify hospital charges for stem cell acquisition for allogeneic bone marrow/stem cell transplants. Specifically, for CY 2017 and subsequent years, we proposed to require hospitals to identify stem cell acquisition charges for allogeneic bone marrow/stem cell transplants separately in Field 42 on Form CMS–1450 (or UB–04), when an allogeneic stem cell transplant occurs. Revenue code 0815 charges should include all services required to acquire stem cells from a donor, as defined above, and should be reported on the same date of service as the transplant procedure in order to be appropriately packaged for payment purposes. The proposed new revenue code 0815 would map to the proposed new line 112.50 (with the cost center code of ''11250'') on the Form CMS–2552–10 cost report. In addition, for CY 2017 and subsequent years, we proposed to no longer use revenue code 0819 for the identification of stem cell acquisition charges for allogeneic bone marrow/stem cell transplants. We invited public comments on these proposals.

Comment: Several commenters supported the proposal to create a new C–APC for allogeneic HSCT (C–APC 5244) and the assignment of status

indicator ''J1'' to CPT code 38240. However, many commenters believed that the proposed payment for C–APC 5244 continued to be significantly less than the overall cost of the service. Some commenters stated that CMS used claims to calculate the proposed payment rate for this service that were incomplete and did not adhere to CMS billing instructions for providers for allogeneic bone marrow/stem cell transplants. Specifically, the commenters stated that there were claims included in the geometric mean cost calculation for allogeneic HSCT (CPT code 38240) that did not include donor acquisition costs reported with revenue code 0819 on the same date of service as the transplant. According to the commenters, this resulted in an inaccurate and low estimation of the total cost of this service. The commenters requested that CMS exclude these claims from ratesetting for allogeneic HSCT. Commenters also suggested that CMS institute an edit beginning in CY 2017 that requires both the donor acquisition revenue code and the stem cell transplant CPT code on the claim to ensure that Medicare receives correctly coded claims for this relatively costly service.

Lastly, commenters stated that the new cost center and revenue code should be utilized for both inpatient and outpatient donor acquisition cost reporting, requested instructions from CMS on how to reclassify expenses into the new cost center from ancillary departments, and also suggested that CMS reconsider the use of cost center line 112.50 because this line is designated for solid organ acquisition costs, which are paid at cost. According to these commenters, these costs do not carry to Worksheet C and, for calculation of CCR, are dropped from cost report after accumulation of overhead. The commenter suggested the use of a cost center in the range of lines 50 through 76.99.

Response: We are persuaded by the commenters and note that at the summer 2016 meeting of the Advisory Panel on Hospital Outpatient Payment (HOP Panel), the panel also recommended that CMS use only the claims that include both CPT code 38240 and revenue code 0819 in calculating the CY 2017 payment rates for allogeneic HSCT. Therefore, we believe it is preferable to use only the claims with both the CPT code for the transplant (CPT code 38240) and the revenue code for the donor acquisition costs (revenue code 0819) to calculate the payment rate for this service under the new C–APC. We agree, in this case, to use only the subset of claims that include both codes because hospitals were specifically instructed in the CMS Internet Only Manual and in prior final rule preamble language to use revenue code 0819 to report donor acquisition costs. This instruction is different from our general instructions regarding correct coding in that this instruction is very specific and was issued to address problems associated with the reporting of donor acquisition costs. We also agree with the commenters' that implementing a code edit beginning in CY 2017 that will require revenue code 0815 to be on a claim with CPT code 38240 is appropriate because this practice will help to ensure that donor acquisition costs for allogeneic HSCT are reported with the appropriate revenue code and that these costs are accurately recorded in the Medicare hospital cost report. This edit will become effective January 1, 2017, and will return claims to the provider if CPT code 38240 is present for the transplant procedure without a separate line on the claim reporting revenue code 0815 for donor acquisition services. Again, we emphasize that this is an exceptional circumstance. We do not anticipate taking any similar actions for any other existing or future APCs or C–APCs. The combination of forming a new C–APC, providing unusually specific instructions in the CMS Internet Only Manual, needing to create a new cost center on the hospital cost report, and the clear recommendation from the HOP Panel—following both its and our thorough analysis of the issue—make this case particularly unique.

Regarding the comment related to the use of cost center line 112.50 to report allogeneic HSCT donor acquisition costs, we agree with the commenter that cost report lines 105 through 117 are designated for solid organ acquisition costs and other data for informational purposes. The commenter also indicated that the proposed line 112.50 does not carry over to Worksheet C for the calculation of a CCR and drops off after accumulation of overhead. The commenter makes a valid point regarding the proposed line 112.50, and we agree that the proposed new revenue code 0815 should be mapped to a different cost center. The commenters recommended the use of a cost center in the range of lines 50 through 76.99. However these cost centers have standard cost center descriptions that do not have a logical subscript for the proposed new line ''Allogeneic Stem Cell Acquisition''. Also, line 76 is used for too many variables and would not provide the needed isolation of costs or charges. However, the Medicare hospital cost report contains an available expansion in the range of lines 77 through 87. We are revising our proposal to update the Medicare hospital cost report (Form CMS–2552–10) by adding proposed new line 112.50 (with the cost center code of ''11250'') and are instead adding a new standard cost center 77, ''Allogeneic Stem Cell Acquisition,'' to Worksheet A (and applicable worksheets) with the standard cost center code of ''07700.'' The new cost center, line 77, will be used for the recording of any acquisition costs related to allogeneic stem cell transplants as defined in Section 231.11, Chapter 4, of the Medicare Claims Processing Manual (Pub. 100–04).

After consideration of the public comments we received, we are finalizing the proposal for C–APC 5244 (Level 4 Blood Product Exchange and Related Services), with the modification to exclude claims that do not include donor acquisition costs reported with revenue code 0819 from ratesetting. In addition, for CY 2017 and subsequent years, we are finalizing the proposal to no longer use revenue code 0819 for the identification of stem cell acquisition charges for allogeneic bone marrow/stem cell transplants. We are establishing a final payment rate for new C–APC 5244 of $27,752 for CY 2017.

d. Calculation of Composite APC Criteria-Based Costs

As discussed in the CY 2008 OPPS/ASC final rule with comment period (72 FR 66613), we believe it is important that the OPPS enhance incentives for hospitals to provide necessary, high quality care as efficiently as possible. For CY 2008, we developed composite APCs to provide a single payment for groups of services that are typically performed together during a single clinical encounter and that result in the provision of a complete service. Combining payment for multiple, independent services into a single OPPS payment in this way enables hospitals to manage their resources with maximum flexibility by monitoring and adjusting the volume and efficiency of services themselves. An additional advantage to the composite APC model is that we can use data from correctly coded multiple procedure claims to calculate payment rates for the specified combinations of services, rather than relying upon single procedure claims which may be low in volume and/or incorrectly coded. Under the OPPS, we currently have composite policies for low dose rate (LDR) prostate brachytherapy, mental health services, and multiple imaging services. We refer

readers to the CY 2008 OPPS/ASC final rule with comment period for a full discussion of the development of the composite APC methodology (72 FR 66611 through 66614 and 66650 through 66652) and the CY 2012 OPPS/ASC final rule with comment period (76 FR 74163) for more recent background. In the CY 2017 OPPS/ASC proposed rule (81 FR 45623), for CY 2017 and subsequent years, we proposed to continue our composite APC payment policies for LDR prostate brachytherapy services, mental health services, and multiple imaging services, as discussed below.

At its August 22, 2016 meeting the HOP Panel recommended that CMS develop a composite APC for pathology services when multiple pathology services are reported on a claim with no other payable services.

Comment: Several commenters supported the HOP Panel's recommendation to develop a composite APC for pathology services when multiple pathology services are reported on a claim with no other payable services and urged CMS to propose and finalize a policy to create such a composite APC. Some commenters also requested that CMS create additional composite APCs for X-ray services, respiratory services, cardiology services, and allergy testing services.

Response: We appreciate the HOP Panel's recommendation, as well as the commenters' request to create new composite APCs for additional services. However, we did not propose to create any new composite APCs for CY 2017. Therefore, we are not accepting the HOP Panel's recommendation at this time. We may consider this HOP Panel recommendation in conjunction with the commenters' request for the creation of new additional composite APCs for future rulemaking.

(1) Low Dose Rate (LDR) Prostate Brachytherapy Composite APC

LDR prostate brachytherapy is a treatment for prostate cancer in which hollow needles or catheters are inserted into the prostate, followed by permanent implantation of radioactive sources into the prostate through the needles/catheters. At least two CPT codes are used to report the composite treatment service because there are separate codes that describe placement of the needles/catheters and the application of the brachytherapy sources: CPT code 55875 (Transperineal placement of needles or catheters into prostate for interstitial radioelement application, with or without cystoscopy) and CPT code 77778 (Interstitial radiation source application; complex), which are generally present together on claims for the same date of service in the same operative session. In order to base payment on claims for the most common clinical scenario, and to further our goal of providing payment under the OPPS for a larger bundle of component services provided in a single hospital encounter, beginning in CY 2008, we began providing a single payment for LDR prostate brachytherapy when the composite service, reported as CPT codes 55875 and 77778, is furnished in a single hospital encounter. We base the payment for composite APC 8001 (LDR Prostate Brachytherapy Composite) on the geometric mean cost derived from claims for the same date of service that contain both CPT codes 55875 and 77778 and that do not contain other separately paid codes that are not on the bypass list. We refer readers to the CY 2008 OPPS/ASC final rule with comment period (72 FR 66652 through 66655) for a full history of OPPS payment for LDR prostate brachytherapy services and a detailed description of how we developed the LDR prostate brachytherapy composite APC.

In the CY 2017 OPPS/ASC proposed rule (81 FR 45623 through 45624), we proposed to continue to pay for LDR prostate brachytherapy services using the composite APC payment methodology proposed and implemented for CY 2008 through CY 2016. That is, we proposed to use CY 2015 claims reporting charges for both CPT codes 55875 and 77778 on the same date of service with no other separately paid procedure codes (other than those on the bypass list) to calculate the proposed payment rate for composite APC 8001. Consistent with our CY 2008 through CY 2016 practice, in the CY 2017 OPPS/ASC proposed rule, we proposed not to use the claims that meet these criteria in the calculation of the geometric mean costs of procedures or services assigned to APC 5375 (Level IV Cystourethroscopy and Other Genitourinary Procedures) and APC 5641 (Complex Interstitial Radiation Source Application), the APCs to which CPT codes 55875 and 77778 are assigned, respectively. We proposed to continue to calculate the proposed geometric mean costs of procedures or services assigned to APCs 5375 and 5641 using single and ''pseudo'' single procedure claims. We continue to believe that composite APC 8001 contributes to our goal of creating hospital incentives for efficiency and cost containment, while providing hospitals with the most flexibility to manage their resources. We also continue to believe that data from claims reporting both services required for LDR prostate brachytherapy provide the most accurate geometric mean cost upon which to base the proposed composite APC payment rate.

Using a partial year of CY 2015 claims data available for the CY 2017 OPPS/ASC proposed rule, we were able to use 202 claims that contained both CPT codes 55875 and 77778 to calculate the proposed geometric mean cost of approximately $3,581 for these procedures upon which the proposed CY 2017 payment rate for composite APC 8001 was based.

We did not receive any public comments on this proposal. Therefore, we are finalizing our proposal, without modification, to continue to use the payment rate for composite APC 8001 to pay for LDR prostate brachytherapy services for CY 2017 and to set the payment rate for this APC using our established methodology. Using the CY 2015 claims data available for this CY 2017 final rule with comment period, we were able to use 224 claims that contained both CPT codes 55875 and 77778 to calculate the geometric mean cost of approximately $3,598 for these procedures upon which the final CY 2017 payment rate for composite APC 8001 is based.

(2) Mental Health Services Composite APC

In the CY 2017 OPPS/ASC proposed rule (81 FR 45624), we proposed to continue our longstanding policy of limiting the aggregate payment for specified less resource-intensive mental health services furnished on the same date to the payment for a day of partial hospitalization services provided by a hospital, which we consider to be the most resource-intensive of all outpatient mental health services. We refer readers to the April 7, 2000 OPPS final rule with comment period (65 FR 18452 through 18455) for the initial discussion of this longstanding policy and the CY 2012 OPPS/ASC final rule with comment period (76 FR 74168) for more recent background.

Specifically, we proposed that when the aggregate payment for specified mental health services provided by one hospital to a single beneficiary on one date of service based on the payment rates associated with the APCs for the individual services exceeds the maximum per diem payment rate for partial hospitalization services provided by a hospital, those specified mental health services would be assigned to composite APC 8010 (Mental Health Services Composite). We also proposed to continue to set the payment rate for

composite APC 8010 at the same payment rate that we proposed to establish for APC 5862 (Level 2 Partial Hospitalization (4 or more services) for hospital-based PHPs), which is the maximum partial hospitalization per diem payment rate for a hospital, and that the hospital continue to be paid the payment rate for composite APC 8010. Under this policy, the I/OCE would continue to determine whether to pay for these specified mental health services individually, or to make a single payment at the same payment rate established for APC 5862 for all of the specified mental health services furnished by the hospital on that single date of service. We continue to believe that the costs associated with administering a partial hospitalization program at a hospital represent the most resource-intensive of all outpatient mental health services. Therefore, we do not believe that we should pay more for mental health services under the OPPS than the highest partial hospitalization per diem payment rate for hospitals.

In the CY 2017 OPPS/ASC proposed rule (81 FR 45667 through 45678), we proposed to combine the existing Level 1 and Level 2 hospital- based PHP APCs into a single hospital-based PHP APC and thereby discontinue APCs 5861 (Level 1 Partial Hospitalization (3 services) for Hospital-Based PHPs) and 5862 (Level 2 Partial Hospitalization (4 or more services) for Hospital-Based PHPs) and replace them with proposed new APC 5863 (Partial Hospitalization (3 or more services per day)). This proposal is being finalized in section VIII. of this final rule with comment period. In light of this policy, we are modifying our final policy for CY 2017, as fully discussed below.

We did not receive any public comments on this proposal. Therefore, we are finalizing our CY 2017 proposal, without modification, that when the aggregate payment for specified mental health services provided by one hospital to a single beneficiary on a single date of service, based on the payment rates associated with the APCs for the individual services, exceeds the maximum per diem payment rate for partial hospitalization services provided by a hospital, those specified mental health services will be paid through composite APC 8010 (Mental Health Services Composite) for CY 2017. In addition, we are finalizing our CY 2017 proposal, with modification, to set the payment rate for composite APC 8010 for CY 2017 at the same payment rate that we established for new APC 5863, which is the maximum partial hospitalization per diem payment rate for a hospital, and that the hospital continue to be paid the payment rate for composite APC 8010.

(3) Multiple Imaging Composite APCs (APCs 8004, 8005, 8006, 8007, and 8008)

Effective January 1, 2009, we provide a single payment each time a hospital submits a claim for more than one imaging procedure within an imaging family on the same date of service, in order to reflect and promote the efficiencies hospitals can achieve when performing multiple imaging procedures during a single session (73 FR 41448 through 41450). We utilize three imaging families based on imaging modality for purposes of this methodology: (1) Ultrasound; (2) computed tomography (CT) and computed tomographic angiography (CTA); and (3) magnetic resonance imaging (MRI) and magnetic resonance angiography (MRA). The HCPCS codes subject to the multiple imaging composite policy and their respective families are listed in Table 12 of the CY 2014 OPPS/ASC final rule with comment period (78 FR 74920 through 74924). While there are three imaging families, there are five multiple imaging composite APCs due to the statutory requirement under section 1833(t)(2)(G) of the Act that we differentiate payment for OPPS imaging services provided with and without contrast. While the ultrasound procedures included under the policy do not involve contrast, both CT/CTA and MRI/MRA scans can be provided either with or without contrast. The five multiple imaging composite APCs established in CY 2009 are:

- APC 8004 (Ultrasound Composite);
- APC 8005 (CT and CTA without Contrast Composite);
- APC 8006 (CT and CTA with Contrast Composite);
- APC 8007 (MRI and MRA without Contrast Composite); and
- APC 8008 (MRI and MRA with Contrast Composite).

We define the single imaging session for the ''with contrast'' composite APCs as having at least one or more imaging procedures from the same family performed with contrast on the same date of service. For example, if the hospital performs an MRI without contrast during the same session as at least one other MRI with contrast, the hospital will receive payment based on the payment rate for APC 8008, the ''with contrast'' composite APC.

We make a single payment for those imaging procedures that qualify for payment based on the composite APC payment rate, which includes any packaged services furnished on the same date of service. The standard (noncomposite) APC assignments continue to apply for single imaging procedures and multiple imaging procedures performed across families. For a full discussion of the development of the multiple imaging composite APC methodology, we refer readers to the CY 2009 OPPS/ASC final rule with comment period (73 FR 68559 through 68569).

In the CY 2017 OPPS/ASC proposed rule (81 FR 45624 through 45625), we proposed to continue to pay for all multiple imaging procedures within an imaging family performed on the same date of service using the multiple imaging composite APC payment methodology. We continue to believe that this policy will reflect and promote the efficiencies hospitals can achieve when performing multiple imaging procedures during a single session.

The proposed CY 2017 payment rates for the five multiple imaging composite APCs (APCs 8004, 8005, 8006, 8007, and 8008) were based on proposed geometric mean costs calculated from a partial year of CY 2015 claims available for the CY 2017 OPPS/ASC proposed rule that qualified for composite payment under the current policy (that is, those claims reporting more than one procedure within the same family on a single date of service). To calculate the proposed geometric mean costs, we used the same methodology that we used to calculate the final geometric mean costs for these composite APCs since CY 2014, as described in the CY 2014 OPPS/ASC final rule with comment period (78 FR 74918). The imaging HCPCS codes referred to as ''overlap bypass codes'' that we removed from the bypass list for purposes of calculating the proposed multiple imaging composite APC geometric mean costs, in accordance with our established methodology as stated in the CY 2014 OPPS/ASC final rule with comment period (78 FR 74918), were identified by asterisks in Addendum N to the CY 2017 OPPS/ASC proposed rule (which is available via the Internet on the CMS Web site) and were discussed in more detail in section II.A.1.b. of the CY 2017 OPPS/ASC proposed rule. For the CY 2017 OPPS/ASC proposed rule, we were able to identify approximately 599,294 ''single session'' claims out of an estimated 1.6 million potential claims for payment through composite APCs from our ratesetting claims data, which represents approximately 38 percent of all eligible claims, to calculate the proposed CY 2017 geometric mean costs for the multiple imaging composite APCs. Table 7 of the CY 2017 OPPS/

ASC proposed rule lists the proposed HCPCS codes that would be subject to the multiple imaging composite APC policy and their respective families and approximate composite APC proposed geometric mean costs for CY 2017.

We did not receive any public comments on this proposal. Therefore, we are finalizing our proposal to continue the use of multiple imaging composite APCs to pay for services providing more than one imaging procedure from the same family on the same date, without modification. For this CY 2017 final rule with comment period, we were able to identify approximately 635,363 ''single session'' claims out of an estimated 1.7 million potential claims for payment through composite APCs from our ratesetting claims data, which represents approximately 37 percent of all eligible claims, to calculate the final CY 2017 geometric mean costs for the multiple imaging composite APCs. Table 3 below lists the HCPCS codes that are subject to the multiple imaging composite APC policy and their respective families and approximate composite APC geometric mean costs for CY 2017.

TABLE 3—FINAL OPPS IMAGING FAMILIES AND MULTIPLE IMAGING PROCEDURE COMPOSITE APCS

Family 1—Ultrasound	
CY 2017 APC 8004 (ultrasound composite)	CY 2017 Approximate APC geometric mean cost = $296
76604	Us exam, chest.
76700	Us exam, abdom, complete.
76705	Echo exam of abdomen.
76770	Us exam abdo back wall, comp.
76775	Us exam abdo back wall, lim.
76776	Us exam k transpl w/Doppler.
76831	Echo exam, uterus.
76856	Us exam, pelvic, complete.
76870	Us exam, scrotum.
76857	Us exam, pelvic, limited.
Family 2—CT and CTA with and without contrast	
CY 2017 APC 8005 (CT and CTA without contrast composite) *	CY 2017 Approximate APC geometric mean cost = $325
70450	Ct head/brain w/o dye.
70480	Ct orbit/ear/fossa w/o dye.
70486	Ct maxillofacial w/o dye.
70490	Ct soft tissue neck w/o dye.
71250	Ct thorax w/o dye.
72125	Ct neck spine w/o dye.
72128	Ct chest spine w/o dye.
72131	Ct lumbar spine w/o dye.
72192	Ct pelvis w/o dye.
73200	Ct upper extremity w/o dye.
73700	Ct lower extremity w/o dye.
74150	Ct abdomen w/o dye.
74261	Ct colonography, w/o dye.
74176	Ct angio abd & pelvis.
CY 2017 APC 8006 (CT and CTA with contrast composite)	CY 2017 Approximate APC geometric mean cost = $548
70487	Ct maxillofacial w/dye.
70460	Ct head/brain w/dye.
70470	Ct head/brain w/o & w/dye.
70481	Ct orbit/ear/fossa w/dye.
70482	Ct orbit/ear/fossa w/o & w/dye.
70488	Ct maxillofacial w/o & w/dye.
70491	Ct soft tissue neck w/dye.
70492	Ct sft tsue nck w/o & w/dye.
70496	Ct angiography, head.
70498	Ct angiography, neck.
71260	Ct thorax w/dye.
71270	Ct thorax w/o & w/dye.
71275	Ct angiography, chest.
72126	Ct neck spine w/dye.
72127	Ct neck spine w/o & w/dye.
72129	Ct chest spine w/dye.
72130	Ct chest spine w/o & w/dye.
72132	Ct lumbar spine w/dye.
72133	Ct lumbar spine w/o & w/dye.
72191	Ct angiograph pelv w/o & w/dye.
72193	Ct pelvis w/dye.
72194	Ct pelvis w/o & w/dye.
73201	Ct upper extremity w/dye.
73202	Ct uppr extremity w/o & w/dye.

CY 2017 APC 8006 (CT and CTA with contrast composite)	CY 2017 Approximate APC geometric mean cost = $548
73206	Ct angio upr extrm w/o & w/dye.
73701	Ct lower extremity w/dye.
73702	Ct lwr extremity w/o & w/dye.
73706	Ct angio lwr extr w/o & w/dye.
74160	Ct abdomen w/dye.
74170	Ct abdomen w/o & w/dye.
74175	Ct angio abdom w/o & w/dye.
74262	Ct colonography, w/dye.
75635	Ct angio abdominal arteries.
74177	Ct angio abd & pelv w/contrast.
74178	Ct angio abd & pelv 1+ regns.

* If a ''without contrast'' CT or CTA procedure is performed during the same session as a ''with contrast'' CT or CTA procedure, the I/OCE assigns the procedure to APC 8006 rather than APC 8005.

Family 3—MRI and MRA with and without Contrast

CY 2017 APC 8007 (MRI and MRA without contrast composite) *	CY 2017 Approximate APC geometric mean cost = $631
70336	Magnetic image, jaw joint.
70540	Mri orbit/face/neck w/o dye.
70544	Mr angiography head w/o dye.
70547	Mr angiography neck w/o dye.
70551	Mri brain w/o dye.
70554	Fmri brain by tech.
71550	Mri chest w/o dye.
72141	Mri neck spine w/o dye.
72146	Mri chest spine w/o dye.
72148	Mri lumbar spine w/o dye.
72195	Mri pelvis w/o dye.
73218	Mri upper extremity w/o dye.
73221	Mri joint upr extrem w/o dye.
73718	Mri lower extremity w/o dye.
73721	Mri jnt of lwr extre w/o dye.
74181	Mri abdomen w/o dye.
75557	Cardiac mri for morph.
75559	Cardiac mri w/stress img.
C8901	MRA w/o cont, abd.
C8904	MRI w/o cont, breast, uni.
C8907	MRI w/o cont, breast, bi.
C8910	MRA w/o cont, chest.
C8913	MRA w/o cont, lwr ext.
C8919	MRA w/o cont, pelvis.
C8932	MRA, w/o dye, spinal canal.
C8935	MRA, w/o dye, upper extr.

CY 2017 APC 8008 (MRI and MRA with contrast composite)	CY 2017 Approximate APC geometric mean cost = $945
70549	Mr angiograph neck w/o & w/dye.
70542	Mri orbit/face/neck w/dye.
70543	Mri orbt/fac/nck w/o & w/dye.
70545	Mr angiography head w/dye.
70546	Mr angiograph head w/o & w/dye.
70547	Mr angiography neck w/o dye.
70548	Mr angiography neck w/dye.
70552	Mri brain w/dye.
70553	Mri brain w/o & w/dye.
71551	Mri chest w/dye.
71552	Mri chest w/o & w/dye.
72142	Mri neck spine w/dye.
72147	Mri chest spine w/dye.
72149	Mri lumbar spine w/dye.
72156	Mri neck spine w/o & w/dye.
72157	Mri chest spine w/o & w/dye.
72158	Mri lumbar spine w/o & w/dye.
72196	Mri pelvis w/dye.
72197	Mri pelvis w/o & w/dye.
73219	Mri upper extremity w/dye.
73220	Mri uppr extremity w/o & w/dye.
73222	Mri joint upr extrem w/dye.
73223	Mri joint upr extr w/o & w/dye.
73719	Mri lower extremity w/dye.

CY 2017 APC 8008 (MRI and MRA with contrast composite)	CY 2017 Approximate APC geometric mean cost = $945
73720	Mri lwr extremity w/o & w/dye.
73722	Mri joint of lwr extr w/dye.
73723	Mri joint lwr extr w/o & w/dye.
74182	Mri abdomen w/dye.
74183	Mri abdomen w/o & w/dye.
75561	Cardiac mri for morph w/dye.
75563	Card mri w/stress img & dye.
C8900	MRA w/cont, abd.
C8902	MRA w/o fol w/cont, abd.
C8903	MRI w/cont, breast, uni.
C8905	MRI w/o fol w/cont, brst, un.
C8906	MRI w/cont, breast, bi.
C8908	MRI w/o fol w/cont, breast,.
C8909	MRA w/cont, chest.
C8911	MRA w/o fol w/cont, chest.
C8912	MRA w/cont, lwr ext.
C8914	MRA w/o fol w/cont, lwr ext.
C8918	MRA w/cont, pelvis.
C8920	MRA w/o fol w/cont, pelvis.
C8931	MRA, w/dye, spinal canal.
C8933	MRA, w/o&w/dye, spinal canal.
C8934	MRA, w/dye, upper extremity.
C8936	MRA, w/o&w/dye, upper extr.

* If a ''without contrast'' MRI or MRA procedure is performed during the same session as a ''with contrast'' MRI or MRA procedure, the I/OCE assigns the procedure to APC 8008 rather than APC 8007.

3. Changes to Packaged Items and Services

a. Background and Rationale for Packaging in the OPPS

Like other prospective payment systems, the OPPS relies on the concept of averaging to establish a payment rate for services. The payment may be more or less than the estimated cost of providing a specific service or a bundle of specific services for a particular patient. The OPPS packages payment for multiple interrelated items and services into a single payment to create incentives for hospitals to furnish services most efficiently and to manage their resources with maximum flexibility. Our packaging policies support our strategic goal of using larger payment bundles in the OPPS to maximize hospitals' incentives to provide care in the most efficient manner. For example, where there are a variety of devices, drugs, items, and supplies that could be used to furnish a service, some of which are more costly than others, packaging encourages hospitals to use the most cost-efficient item that meets the patient's needs, rather than to routinely use a more expensive item, which often results if separate payment is provided for the item.

Packaging also encourages hospitals to effectively negotiate with manufacturers and suppliers to reduce the purchase price of items and services or to explore alternative group purchasing arrangements, thereby encouraging the most economical health care delivery. Similarly, packaging encourages hospitals to establish protocols that ensure that necessary services are furnished, while scrutinizing the services ordered by practitioners to maximize the efficient use of hospital resources. Packaging payments into larger payment bundles promotes the predictability and accuracy of payment for services over time. Finally, packaging may reduce the importance of refining service-specific payment because packaged payments include costs associated with higher cost cases requiring many ancillary items and services and lower cost cases requiring fewer ancillary items and services. Because packaging encourages efficiency and is an essential component of a prospective payment system, packaging payment for items and services that are typically integral, ancillary, supportive, dependent, or adjunctive to a primary service has been a fundamental part of the OPPS since its implementation in August 2000. For an extensive discussion of the history and background of the OPPS packaging policy, we refer readers to the CY 2000 OPPS final rule (65 FR 18434), the CY 2008 OPPS/ASC final rule with comment period (72 FR 66580), the CY 2014 OPPS/ASC final rule with comment period (78 FR 74925), the CY 2015 OPPS/ASC final rule with comment period (79 FR 66817), and the CY 2016 OPPS/ASC final rule with comment period (80 FR 70343). As we continue to develop larger payment groups that more broadly reflect services provided in an encounter or episode of care, we have expanded the OPPS packaging policies. Most, but not necessarily all, items and services currently packaged in the OPPS are listed in 42 CFR 419.2(b). Our overarching goal is to make OPPS payments for all services paid under the OPPS more consistent with those of a prospective payment system and less like those of a per service fee schedule, which pays separately for each coded item. As a part of this effort, we have continued to examine the payment for items and services provided under the OPPS to determine which OPPS services can be packaged to further achieve the objective of advancing the OPPS toward a more prospective payment system.

For CY 2017, we have examined our OPPS packaging policies, reviewing categories of integral, ancillary, supportive, dependent, or adjunctive items and services that are packaged into payment for the primary service that they support. In the CY 2017 OPPS/ASC proposed rule (81 FR 45628), we proposed some modifications to our packaging policies. The specific proposals and any applicable summations of and responses to any public comments received in response to these proposals are discussed under the sections below.

b. Clinical Diagnostic Laboratory Test Packaging Policy

(1) Background

In CY 2014, we finalized a policy to package payment for most clinical

diagnostic laboratory tests in the OPPS (78 FR 74939 through 74942, and 42 CFR 419.2(b)(17)). In CY 2016, we made some minor modifications to this policy (80 FR 70348 through 70350). Under current policy, certain clinical diagnostic laboratory tests that are listed on the Clinical Laboratory Fee Schedule (CLFS) are packaged in the OPPS as integral, ancillary, supportive, dependent, or adjunctive to the primary service or services provided in the hospital outpatient setting. Specifically, we conditionally package laboratory tests and only pay separately for laboratory tests when (1) they are the only services provided to a beneficiary on a claim; (2) they are ''unrelated'' laboratory tests, meaning they are on the same claim as other hospital outpatient services, but are ordered for a different diagnosis than the other hospital outpatient services and are ordered by a different practitioner than the practitioner who ordered the other hospital outpatient services; (3) they are molecular pathology tests; or (4) the laboratory tests are considered preventive services.

(2) ''Unrelated'' Laboratory Test Exception

Laboratory tests are separately paid in the HOPD when they are considered ''unrelated'' laboratory tests. Unrelated laboratory tests are tests on the same claim as other hospital outpatient services, but are ordered for a different diagnosis than the other hospital outpatient services and are ordered by a different practitioner than the practitioner who ordered the other hospital outpatient services. Unrelated laboratory tests are designated for separate payment by hospitals with the ''L1'' modifier. This is the only use of the ''L1'' modifier.

For CY 2017, in the CY 2017 OPPS/ASC proposed rule (81 FR 45628), we proposed to discontinue the unrelated laboratory test exception (and the ''L1'' modifier) for the following reasons: We believe that, in most cases, ''unrelated'' laboratory tests are not significantly different than most other packaged laboratory tests provided in the HOPD. Multiple hospitals have informed us that the ''unrelated'' laboratory test exception is not useful to them because they cannot determine when a laboratory test has been ordered by a different physician and for a different diagnosis than the other services reported on the same claim. We agree with these hospitals, and we also believe that the requirements for ''unrelated'' laboratory tests (different diagnosis and different ordering physician) do not necessarily correlate with the relatedness of a laboratory test to the other HOPD services that a patient receives during the same hospital stay. In the context of most hospital outpatient encounters, most laboratory tests are related in some way to other services being provided because most common laboratory tests evaluate the functioning of the human body as a physiologic system and, therefore, relate to other tests and interventions that a patient receives. Also, it is not uncommon for beneficiaries to have multiple diagnoses, and often times the various diagnoses are related in some way. Therefore, the associated diagnosis is not necessarily indicative of how related a laboratory test is to other hospital outpatient services performed during a hospital stay, especially given the granularity of ICD–10 diagnosis coding. Packaging of other ancillary services in the OPPS is not dependent upon a common diagnosis with the primary service into which an ancillary service is packaged. Therefore, we do not believe that this should be a requirement for laboratory test packaging. Furthermore, we believe that just because a laboratory test is ordered by a different physician than the physician who ordered the other hospital outpatient services furnished during a hospital outpatient stay does not necessarily mean that the laboratory test is not related to other services being provided to a beneficiary.

Therefore, because the ''different physician, different diagnosis'' criteria for ''unrelated'' laboratory tests do not clearly identify or distinguish laboratory tests that are not integral, ancillary, supportive, dependent, or adjunctive to other hospital outpatient services provided to the beneficiary during the hospital stay, we proposed to no longer permit the use of the ''L1'' modifier to self-designate an exception to the laboratory test packaging under these circumstances, and seek separate payment for such laboratory tests at the CLFS payment rates. Instead, we proposed to package any and all laboratory tests (except molecular pathology tests, certain ADLTs, and preventive tests) if they appear on a claim with other hospital outpatient services.

We invited public comments on this proposal.

Comment: The majority of commenters supported the proposal. Some of the commenters believed that the proposal would reduce administrative burden. Other commenters opposed the proposal and stated that, despite the burden, they would rather have the opportunity for separate payment for ''unrelated'' laboratory tests. Some commenters believed that the proposal would result in no separate payment for laboratory tests when laboratory tests are the only services provided.

Response: We appreciate the commenters' support. The proposal was made in response to concerns raised by hospitals about when to use modifier ''L1,'' and because we agreed with the commenters' concerns as noted above. We also do not believe that the discontinuation of the modifier ''L1'' policy is inconsistent with our policy to package items and services that are integral, ancillary, supportive, dependent, or adjunctive to other hospital outpatient services. Also, we stated in the CY 2017 OPPS/ASC proposed rule (81 FR 45628) that ''[i]n the context of most hospital outpatient encounters, most laboratory tests are related in some way to other services being provided because most common laboratory tests evaluate the functioning of the human body as a physiologic system and therefore relate to other tests and interventions that a patient receives.'' Therefore, we do not believe that it is necessary to attempt to identify certain laboratory tests as unrelated to other services furnished to a patient. Finally, the discontinuation of the ''L1'' modifier and the associated policy does not affect the separate payment for laboratory tests when these procedures are the only services that are provided to the beneficiary.

After consideration of the public comments we received, we are finalizing, as proposed, the discontinuation of the ''unrelated'' laboratory test exception and consequently the ''L1'' modifier.

(3) Molecular Pathology Test Exception

In 2014, we excluded from the laboratory packaging policy molecular pathology tests described by CPT codes in the ranges of 81200 through 81383, 81400 through 81408, and 81479 (78 FR 74939 through 74942). In 2016, we expanded this policy to include not only the original code range but also all new molecular pathology test codes. Molecular pathology laboratory tests were excluded from packaging because we believed that these relatively new tests may have a different pattern of clinical use than more conventional laboratory tests, which may make them generally less tied to a primary service in the hospital outpatient setting than the more common and routine laboratory tests that are packaged (80 FR 70348 through 70350).

In response to the CY 2016 OPPS/ASC proposed rule, commenters argued that CMS' rationale for excluding molecular

pathology tests from the laboratory test packaging policy also applies to certain CPT codes that describe some new multianalyte assays with algorithmic analyses (MAAAs).

In the CY 2016 OPPS/ASC final rule with comment period (80 FR 70349 through 70350), we stated that ''we may consider whether additional exceptions to the OPPS laboratory test packaging policy should apply to tests other than molecular pathology tests in the future.'' After further consideration, we agree with these commenters that the exception that currently applies to molecular pathology tests may be appropriately applied to other laboratory tests that, like molecular pathology tests, are relatively new and may have a different pattern of clinical use than more conventional laboratory tests, which may make them generally less tied to a primary service in the hospital outpatient setting than the more common and routine laboratory tests that are packaged. Therefore, for CY 2017, in the CY 2017 OPPS/ASC proposed rule (81 FR 45628), we proposed an expansion of the laboratory packaging exception that currently applies to molecular pathology tests to also apply to all advanced diagnostic laboratory tests (ADLTs) that meet the criteria of section 1834A(d)(5)(A) of the Act. We believe that some of these diagnostic tests that meet these criteria will not be molecular pathology tests but will also have a different pattern of clinical use than more conventional laboratory tests, which may make them generally less tied to a primary service in the hospital outpatient setting than the more common and routine laboratory tests that are packaged. We proposed to assign status indicator ''A'' (Separate payment under the CLFS) to ADLTs once a laboratory test is designated an ADLT under the CLFS.

We invited public comments on this proposal.

Comment: Many commenters supported the proposal. A few commenters suggested that CMS apply the exception not just to ADLTs that meet the criteria of section 1834A(d)(5)(A) of the Act, but to all MAAAs.

Response: We appreciate the commenters' support. Regarding the suggestion that we exempt all MAAAs from OPPS packaging, we do not believe that this would be prudent, as MAAAs are a broad category of tests. We are limiting the expansion of this exception to only those ADLTs that meet the criteria of section 1834A(d)(5)(A) of the Act, which are defined as tests that provide an analysis of multiple biomarkers of DNA, RNA, or proteins combined with a unique algorithm to yield a single patient-specific result.

After consideration of the public comments we received, we are finalizing our proposal, without modification, to assign status indicator ''A'' (Separate payment under the CLFS) to ADLTs once a laboratory test is designated an ADLT under the CLFS.

c. Conditional Packaging Status Indicators ''Q1'' and ''Q2''

(1) Background

Packaged payment versus separate payment of items and services in the OPPS is designated at the code level through the assignment of a status indicator to all CPT and HCPCS codes. One type of packaging in the OPPS is conditional packaging, which means that, under certain circumstances, items and services are packaged, and under other circumstances, they are paid separately. There are several different conditional packaging status indicators. Two of these status indicators indicate packaging of the services with other services furnished on the same date of service: Status indicator ''Q1,'' which packages items or services on the same date of service with services assigned status indicator ''S'' (Procedure or Service, Not Discounted When Multiple), ''T'' (Procedure or Service, Multiple Procedure Reduction Applies), or ''V'' (Clinic or Emergency Department Visit); and status indicator ''Q2,'' which packages items or services on the same date of service with services assigned status indicator ''T.'' Other conditional packaging status indicators, ''Q4'' (Conditionally packaged laboratory tests) and ''J1''/''J2'' (Hospital Part B services paid through a comprehensive APC), package services on the same claim, regardless of the date of service.

(2) Change in Conditional Packaging Status Indicators Logic

We do not believe that some conditional packaging status indicators should package based on date of service, while other conditional packaging status indicators package based on services reported on the same claim. For CY 2017, we proposed to align the packaging logic for all of the conditional packaging status indicators and change the logic for status indicators ''Q1'' and ''Q2'' so that packaging would occur at the claim level (instead of based on the date of service) to promote consistency and ensure that items and services that are provided during a hospital stay that may span more than one day are appropriately packaged according to OPPS packaging policies (81 FR 45629). We pointed out that this would increase the conditional packaging of conditionally packaged items and services because conditional packaging would occur whenever a conditionally packaged item or service is reported on the same claim as a primary service without regard to the date of service.

We invited public comments on this proposal.

Comment: The majority of commenters opposed the proposal. These commenters opposed the proposal primarily because of a general opposition to packaging in the OPPS. Other commenters supported the proposal and acknowledged CMS' efforts to promote consistency in the OPPS. Some commenters requested further information on the impacts of the proposed change.

Response: We thank the commenters who support this proposal. The commenters who opposed the proposal did not provide specifics as to why the proposed change would be inconsistent with OPPS packaging policies. We believe that conditional packaging should operate at the claim level for an entire hospital stay and not be limited to a single date of service. We refer the commenters interested in the impacts of this and other policies to section XXIII. of this final rule with comment period.

After consideration of the public comments we received, we are finalizing our proposal, without modification, to align the packaging logic for all of the conditional packaging status indicators and change the logic for status indicators ''Q1'' and ''Q2'' so that packaging occurs at the claim level (instead of based on the date of service).

4. Calculation of OPPS Scaled Payment Weights

We established a policy in the CY 2013 OPPS/ASC final rule with comment period (77 FR 68283) of using geometric mean-based APC costs to calculate relative payment weights under the OPPS. In the CY 2016 OPPS/ASC final rule with comment period (80 FR 70350 through 70351), we applied this policy and calculated the relative payment weights for each APC for CY 2016 that were shown in Addenda A and B to that final rule with comment period (which were made available via the Internet on the CMS Web site) using the APC costs discussed in sections II.A.1. and II.A.2. of that final rule with comment period. For CY 2017, we proposed to continue to apply the policy established in CY 2013 and calculate relative payment weights for each APC for CY 2017 using geometric mean-based APC costs (81 FR 45629).

For CY 2012 and CY 2013, outpatient clinic visits were assigned to one of five

levels of clinic visit APCs, with APC 0606 representing a mid-level clinic visit. In the CY 2014 OPPS/ASC final rule with comment period (78 FR 75036 through 75043), we finalized a policy that created alphanumeric HCPCS code G0463 (Hospital outpatient clinic visit for assessment and management of a patient), representing any and all clinic visits under the OPPS. HCPCS code G0463 was assigned to APC 0634 (Hospital Clinic Visits). We also finalized a policy to use CY 2012 claims data to develop the CY 2014 OPPS payment rates for HCPCS code G0463 based on the total geometric mean cost of the levels one through five CPT E/M codes for clinic visits previously recognized under the OPPS (CPT codes 99201 through 99205 and 99211 through 99215). In addition, we finalized a policy to no longer recognize a distinction between new and established patient clinic visits.

For CY 2016, we deleted APC 0634 and reassigned the outpatient clinic visit HCPCS code G0463 to APC 5012 (Level 2 Examinations and Related Services) (80 FR 70351).

For CY 2017, we proposed to continue to standardize all of the relative payment weights to APC 5012 (81 FR 45629). We believe that standardizing relative payment weights to the geometric mean of the APC to which HCPCS code G0463 is assigned maintains consistency in calculating unscaled weights that represent the cost of some of the most frequently provided OPPS services. For CY 2017, in the CY 2017 OPPS/ASC proposed rule (81 FR 45629), we proposed to assign APC 5012 a relative payment weight of 1.00 and to divide the geometric mean cost of each APC by the geometric mean cost for APC 5012 to derive the unscaled relative payment weight for each APC. The choice of the APC on which to standardize the relative payment weights does not affect payments made under the OPPS because we scale the weights for budget neutrality.

Section 1833(t)(9)(B) of the Act requires that APC reclassification and recalibration changes, wage index changes, and other adjustments be made in a budget neutral manner. Budget neutrality ensures that the estimated aggregate weight under the OPPS for CY 2017 is neither greater than nor less than the estimated aggregate weight that would have been made without the changes. To comply with this requirement concerning the APC changes, we proposed to compare the estimated aggregate weight using the CY 2016 scaled relative payment weights to the estimated aggregate weight using the proposed CY 2017 unscaled relative payment weights.

We did not receive any public comments on our proposal to use the geometric mean cost of renumbered APC 5012 to standardize relative payment weights. Therefore, we are finalizing our proposal and assigning APC 5012 the relative payment weight of 1.00, and using the relative payment weight for APC 5012 to derive the unscaled relative payment weight for each APC for CY 2017.

For CY 2016, we multiplied the CY 2016 scaled APC relative payment weight applicable to a service paid under the OPPS by the volume of that service from CY 2015 claims to calculate the total relative payment weight for each service. We then added together the total relative payment weight for each of these services in order to calculate an estimated aggregate weight for the year. For CY 2017, in the CY 2017 OPPS/ASC proposed rule (81 FR 45629), we proposed to apply the same process using the estimated CY 2017 unscaled relative payment weights rather than scaled relative payment weights. We proposed to calculate the weight scalar by dividing the CY 2016 estimated aggregate weight by the unscaled CY 2017 estimated aggregate weight.

For a detailed discussion of the weight scalar calculation, we refer readers to the OPPS claims accounting document available on the CMS Web site at: *http://www.cms.gov/Medicare/Medicare-Fee-for-Service-Payment/HospitalOutpatientPPS/index.html*. Click on the CY 2017 OPPS final rule link and open the claims accounting document link at the bottom of the page.

In the CY 2017 OPPS/ASC proposed rule (81 FR 45630), we proposed to compare the estimated unscaled relative payment weights in CY 2017 to the estimated total relative payment weights in CY 2016 using CY 2015 claims data, holding all other components of the payment system constant to isolate changes in total weight. Based on this comparison, we proposed to adjust the calculated CY 2017 unscaled relative payment weights for purposes of budget neutrality. We proposed to adjust the estimated CY 2017 unscaled relative payment weights by multiplying them by a weight scaler of 1.4059 to ensure that the proposed CY 2017 relative payment weights are scaled to be budget neutral. The proposed CY 2017 relative payment weights listed in Addenda A and B to the proposed rule (which are available via the Internet on the CMS Web site) were scaled and incorporated the recalibration adjustments discussed in sections II.A.1. and II.A.2. of the proposed rule.

Section 1833(t)(14) of the Act provides the payment rates for certain SCODs. Section 1833(t)(14)(H) of the Act provides that additional expenditures resulting from this paragraph shall not be taken into account in establishing the conversion factor, weighting, and other adjustment factors for 2004 and 2005 under paragraph (9), but shall be taken into account for subsequent years. Therefore, the cost of those SCODs (as discussed in section V.B.3. of this final rule with comment period) is included in the budget neutrality calculations for the CY 2017 OPPS.

We did not receive any public comments on the proposed weight scaler calculation.

Therefore, we are finalizing our proposal to use the calculation process described in the proposed rule, without modification. Using updating final rule claims data, we are updating the estimated CY 2017 unscaled relative payment weights by multiplying them by a weight scaler of 1.4208 to ensure that the final CY 2017 relative payment weights are scaled to be budget neutral.

B. Conversion Factor Update

Section 1833(t)(3)(C)(ii) of the Act requires the Secretary to update the conversion factor used to determine the payment rates under the OPPS on an annual basis by applying the OPD fee schedule increase factor. For purposes of section 1833(t)(3)(C)(iv) of the Act, subject to sections 1833(t)(17) and 1833(t)(3)(F) of the Act, the OPD fee schedule increase factor is equal to the hospital inpatient market basket percentage increase applicable to hospital discharges under section 1886(b)(3)(B)(iii) of the Act. In the FY 2017 IPPS/LTCH PPS final rule (81 FR 56938 through 81 FR 56939), consistent with current law, based on IHS Global Insight, Inc.'s second quarter 2016 forecast of the FY 2017 market basket increase, the FY 2017 IPPS market basket update is 2.7 percent.

However, sections 1833(t)(3)(F) and 1833(t)(3)(G)(v) of the Act, as added by section 3401(i) of the Patient Protection and Affordable Care Act of 2010 (Pub. L. 111–148) and as amended by section 10319(g) of that law and further amended by section 1105(e) of the Health Care and Education Reconciliation Act of 2010 (Pub. L. 111–152), provide adjustments to the OPD fee schedule increase factor for CY 2017.

Specifically, section 1833(t)(3)(F)(i) of the Act requires that, for 2012 and subsequent years, the OPD fee schedule increase factor under subparagraph

(C)(iv) be reduced by the productivity adjustment described in section 1886(b)(3)(B)(xi)(II) of the Act. Section 1886(b)(3)(B)(xi)(II) of the Act defines the productivity adjustment as equal to the 10-year moving average of changes in annual economy-wide, private nonfarm business multifactor productivity (MFP) (as projected by the Secretary for the 10-year period ending with the applicable fiscal year, year, cost reporting period, or other annual period) (the ''MFP adjustment''). In the FY 2012 IPPS/LTCH PPS final rule (76 FR 51689 through 51692), we finalized our methodology for calculating and applying the MFP adjustment, and then revised this methodology as discussed in the FY 2016 IPPS/LTCH PPS final rule (80 FR 49509). In the FY 2017 IPPS/LTCH PPS final rule (81 FR 56938 through 81 FR 56939), we discussed the calculation of the final MFP adjustment for FY 2017, which is 0.3 percentage point.

In the CY 2017 OPPS/ASC proposed rule, we proposed that if more recent data became subsequently available after the publication of the proposed rule (for example, a more recent estimate of the market basket increase and the MFP adjustment), we would use such updated data, if appropriate, to determine the CY 2017 market basket update and the MFP adjustment, which are components in calculating the OPD fee schedule increase factor under sections 1833(t)(3)(C)(iv) and 1833(t)(3)(F) of the Act, in this CY 2017 OPPS/ASC final rule with comment period. Consistent with that proposal, and the FY 2017 IPPS/LTCH PPS final rule, we applied the updated final FY 2017 market basket percentage increase (2.7 percent) and the MFP adjustment (0.3 percent) to the OPD fee schedule increase factor for the CY 2017 OPPS.

In addition, section 1833(t)(3)(F)(ii) of the Act requires that, for each of years 2010 through 2019, the OPD fee schedule increase factor under section 1833(t)(3)(C)(iv) of the Act be reduced by the adjustment described in section 1833(t)(3)(G) of the Act. For CY 2017, section 1833(t)(3)(G)(v) of the Act provides a 0.75 percentage point reduction to the OPD fee schedule increase factor under section 1833(t)(3)(C)(iv) of the Act. Therefore, in accordance with sections 1833(t)(3)(F)(ii) and 1833(t)(3)(G)(v) of the Act, in the CY 2017 OPPS/ASC proposed rule, we proposed to apply a 0.75 percentage point reduction to the OPD fee schedule increase factor for CY 2017.

We note that section 1833(t)(3)(F) of the Act provides that application of this subparagraph may result in the OPD fee schedule increase factor under section 1833(t)(3)(C)(iv) of the Act being less than 0.0 percent for a year, and may result in OPPS payment rates being less than rates for the preceding year. As described in further detail below, we are applying an OPD fee schedule increase factor of 1.65 percent for the CY 2017 OPPS (which is 2.7 percent, the final estimate of the hospital inpatient market basket percentage increase, less the final 0.3 percentage point MFP adjustment, and less the 0.75 percentage point additional adjustment).

Hospitals that fail to meet the Hospital OQR Program reporting requirements are subject to an additional reduction of 2.0 percentage points from the OPD fee schedule increase factor adjustment to the conversion factor that would be used to calculate the OPPS payment rates for their services, as required by section 1833(t)(17) of the Act. For further discussion of the Hospital OQR Program, we refer readers to section XIII. of this final rule with comment period.

In the CY 2017 OPPS/ASC proposed rule, we proposed to amend 42 CFR 419.32(b)(1)(iv)(B) by adding a new paragraph (*8*) to reflect the requirement in section 1833(t)(3)(F)(i) of the Act that, for CY 2017, we reduce the OPD fee schedule increase factor by the MFP adjustment as determined by CMS, and to reflect the requirement in section 1833(t)(3)(G)(v) of the Act, as required by section 1833(t)(3)(F)(ii) of the Act, that we reduce the OPD fee schedule increase factor by an additional 0.75 percentage point for CY 2017.

We did not receive any public comments on the proposed adjustments to the OPD fee schedule increase factor or on the proposed changes to the regulations at 42 CFR 419.32(b)(1)(iv)(B). For the reasons discussed above, we are adjusting the OPD fee schedule increase factor and finalizing the changes to the regulations as proposed. To set the OPPS conversion factor for the CY 2017 proposed rule, we proposed to increase the CY 2016 conversion factor of $73.725 by 1.55 percent. In accordance with section 1833(t)(9)(B) of the Act, we proposed further to adjust the conversion factor for CY 2017 to ensure that any revisions made to the wage index and rural adjustment were made on a budget neutral basis. We proposed to calculate an overall budget neutrality factor of 1.0000 for wage index changes by comparing proposed total estimated payments from our simulation model using the proposed FY 2017 IPPS wage indexes to those payments using the FY 2016 IPPS wage indexes, as adopted on a calendar year basis for the OPPS.

For the CY 2017 proposed rule, we proposed to maintain the current rural adjustment policy, as discussed in section II.E. of this final rule with comment period. Therefore, the proposed budget neutrality factor for the rural adjustment was 1.0000.

For the CY 2017 proposed rule, we proposed to continue previously established policies for implementing the cancer hospital payment adjustment described in section 1833(t)(18) of the Act, as discussed in section II.F. of this final rule with comment period. We proposed to calculate a CY 2017 budget neutrality adjustment factor for the cancer hospital payment adjustment by comparing estimated total CY 2017 payments under section 1833(t) of the Act, including the proposed CY 2017 cancer hospital payment adjustment, to estimated CY 2017 total payments using the CY 2016 final cancer hospital payment adjustment as required under section 1833(t)(18)(B) of the Act.

The CY 2017 proposed estimated payments applying the proposed CY 2017 cancer hospital payment adjustment were identical to estimated payments applying the CY 2016 final cancer hospital payment adjustment. Therefore, we proposed to apply a budget neutrality adjustment factor of 1.0000 to the conversion factor for the cancer hospital payment adjustment.

For CY 2017, we proposed to apply a budget neutrality adjustment factor of 1.0003 to increase the conversion factor to account for our proposal to package unrelated laboratory tests into OPPS payment.

For the proposed rule, we estimated that proposed pass-through spending for drugs, biologicals, and devices for CY 2017 would equal approximately $148.3 million, which represented 0.24 percent of total projected CY 2017 OPPS spending. Therefore, the proposed conversion factor would be adjusted by the difference between the 0.26 percent estimate of pass-through spending for CY 2016 and the 0.24 percent estimate of proposed pass-through spending for CY 2017, resulting in a proposed adjustment for CY 2017 of 0.02 percent. Proposed estimated payments for outliers would remain at 1.0 percent of total OPPS payments for CY 2017. We estimated for the proposed rule that outlier payments would be 0.96 percent of total OPPS payments in CY 2016; the 1.0 percent for proposed outlier payments in CY 2017 would constitute a 0.04 percent increase in payment in CY 2017 relative to CY 2016.

Comment: One commenter requested that CMS verify the amount of dollars

used to calculate the adjustment of the conversion factor from the policy change to include payments for unrelated laboratory services with modifier ''L1'' that will be packaged into OPPS services starting in CY 2017. The commenter believed that the cost of packaging those services would be approximately $40 million rather than the approximately $22 million that CMS identified using the methodology and claims data from the CY 2017 OPPS/ASC proposed rule (81 FR 45631).

Response: We appreciate the commenter's review of our analysis. We note that, while estimated cost is generally used for ratesetting purposes to establish the relative payment weights, our proposed policy of including those payments for unrelated laboratory services with the ''L1'' modifier that would be newly packaged would be in the context of budget neutralizing those payments into the OPPS. While the costs used from these services in establishing the relative weights would be approximately $45 million, the payments that would be used for budget neutralization would be approximately $25 million, using the same source claims dataset as in the CY 2017 OPPS/ASC final rule with comment period. We then determine how to adjust the OPPS conversion factor by comparing the CY 2015 aggregate payment of approximately $25 million to the total estimated payment for the CY 2015 OPPS, which results in a final conversion factor adjustment for this final laboratory services policy change of 1.0004.

For the proposed rule, we also proposed that hospitals that fail to meet the reporting requirements of the Hospital OQR Program would continue to be subject to a further reduction of 2.0 percentage points to the OPD fee schedule increase factor. For hospitals that fail to meet the requirements of the Hospital OQR Program, we proposed to make all other adjustments discussed above, but use a reduced OPD fee schedule update factor of −0.45 percent (that is, the proposed OPD fee schedule increase factor of 1.55 percent further reduced by 2.0 percentage points). This would result in a proposed reduced conversion factor for CY 2017 of 73.411 for hospitals that fail to meet the Hospital OQR requirements (a difference of −1.498 in the conversion factor relative to hospitals that met the requirements).

In summary, for CY 2017, we proposed to amend § 419.32(b)(1)(iv)(B) by adding a new paragraph (*8*) to reflect the reductions to the OPD fee schedule increase factor that are required for CY 2017 to satisfy the statutory requirements of sections 1833(t)(3)(F) and (t)(3)(G)(v) of the Act. We proposed to use a reduced conversion factor of 73.411 in the calculation of payments for hospitals that fail to meet the Hospital OQR Program requirements (a difference of −1.498 in the conversion factor relative to hospitals that met the requirements).

We invited public comments on these proposals. However, we did not receive any public comments. Therefore, we are finalizing these proposals without modification. For CY 2017, we proposed to continue previously established policies for implementing the cancer hospital payment adjustment described in section 1833(t)(18) of the Act, as discussed in section II.F. of this final rule with comment period. Based on the final rule updated data used in calculating the cancer hospital payment adjustment in section II.F. of this final rule with comment period, the target payment-to-cost ratio for the cancer hospital payment adjustment, which was 0.92 for CY 2016, is 0.91 for CY 2017. As a result, we are applying a budget neutrality adjustment factor of 1.0003 to the conversion factor for the cancer hospital payment adjustment.

As a result of these finalized policies, the OPD fee schedule increase factor for the CY 2017 OPPS is 1.65 percent (which is 2.7 percent, the estimate of the hospital inpatient market basket percentage increase, less the 0.3 percentage point MFP adjustment, and less the 0.75 percentage point additional adjustment). For CY 2017, we are using a conversion factor of $75.001 in the calculation of the national unadjusted payment rates for those items and services for which payment rates are calculated using geometric mean costs; that is, the OPD fee schedule increase factor of 1.65 percent for CY 2017, the required wage index budget neutrality adjustment of approximately 0.9999, the cancer hospital payment adjustment of 1.0003, the packaging of unrelated laboratory tests adjustment factor of 1.0004, and the adjustment of 0.02 percentage point of projected OPPS spending for the difference in the pass-through spending and outlier payments that result in a conversion factor for CY 2017 of $75.001.

C. Wage Index Changes

Section 1833(t)(2)(D) of the Act requires the Secretary to determine a wage adjustment factor to adjust the portion of payment and coinsurance attributable to labor-related costs for relative differences in labor and labor-related costs across geographic regions in a budget neutral manner (codified at 42 CFR 419.43(a)). This portion of the OPPS payment rate is called the OPPS labor-related share. Budget neutrality is discussed in section II.B. of this final rule with comment period.

The OPPS labor-related share is 60 percent of the national OPPS payment. This labor-related share is based on a regression analysis that determined that, for all hospitals, approximately 60 percent of the costs of services paid under the OPPS were attributable to wage costs. We confirmed that this labor-related share for outpatient services is appropriate during our regression analysis for the payment adjustment for rural hospitals in the CY 2006 OPPS final rule with comment period (70 FR 68553). In the CY 2017 OPPS/ASC proposed rule (81 FR 45631), we proposed to continue this policy for the CY 2017 OPPS. We refer readers to section II.H. of this final rule with comment period for a description and an example of how the wage index for a particular hospital is used to determine payment for the hospital.

As discussed in section II.A.2.c. of this final rule with comment period, for estimating APC costs, we standardize 60 percent of estimated claims costs for geographic area wage variation using the same FY 2017 pre-reclassified wage index that the IPPS uses to standardize costs. This standardization process removes the effects of differences in area wage levels from the determination of a national unadjusted OPPS payment rate and copayment amount.

Under 42 CFR 419.41(c)(1) and 419.43(c) (published in the OPPS April 7, 2000 final rule with comment period (65 FR 18495 and 18545)), the OPPS adopted the final fiscal year IPPS post-reclassified wage index as the calendar year wage index for adjusting the OPPS standard payment amounts for labor market differences. Therefore, the wage index that applies to a particular acute care, short-stay hospital under the IPPS also applies to that hospital under the OPPS. As initially explained in the September 8, 1998 OPPS proposed rule (63 FR 47576), we believe that using the IPPS wage index as the source of an adjustment factor for the OPPS is reasonable and logical, given the inseparable, subordinate status of the HOPD within the hospital overall. In accordance with section 1886(d)(3)(E) of the Act, the IPPS wage index is updated annually.

The Affordable Care Act contained several provisions affecting the wage index. These provisions were discussed in the CY 2012 OPPS/ASC final rule with comment period (76 FR 74191). Section 10324 of the Affordable Care Act added section 1886(d)(3)(E)(iii)(II) to the Act, which defines a frontier State

and amended section 1833(t) of the Act to add new paragraph (19), which requires a frontier State wage index floor of 1.00 in certain cases, and states that the frontier State floor shall not be applied in a budget neutral manner. We codified these requirements at § 419.43(c)(2) and (c)(3) of our regulations. For the CY 2017 OPPS, we proposed to implement this provision in the same manner as we have since CY 2011. Under this policy, the frontier State hospitals would receive a wage index of 1.00 if the otherwise applicable wage index (including reclassification, rural and imputed floors, and rural floor budget neutrality) is less than 1.00. Because the HOPD receives a wage index based on the geographic location of the specific inpatient hospital with which it is associated, the frontier State wage index adjustment applicable for the inpatient hospital also would apply for any associated HOPD. We refer readers to the following sections in the FY 2011 through FY 2017 IPPS/LTCH PPS final rules for discussions regarding this provision, including our methodology for identifying which areas meet the definition of ''frontier States'' as provided for in section 1886(d)(3)(E)(iii)(II) of the Act: for FY 2011, 75 FR 50160 through 50161; for FY 2012, 76 FR 51793, 51795, and 51825; for FY 2013, 77 FR 53369 through 53370; for FY 2014, 78 FR 50590 through 50591; for FY 2015, 79 FR 49971; for FY 2016, 80 FR 49498; and for FY 2017, 81 FR 56922.

In addition to the changes required by the Affordable Care Act, we note that the FY 2017 IPPS wage indexes continue to reflect a number of adjustments implemented over the past few years, including, but not limited to, reclassification of hospitals to different geographic areas, the rural floor and imputed floor provisions, an adjustment for occupational mix, and an adjustment to the wage index based on commuting patterns of employees (the out-migration adjustment). We refer readers to the FY 2017 IPPS/LTCH PPS final rule (81 FR 56912 through 56937) for a detailed discussion of all changes to the FY 2017 IPPS wage indexes. In addition, we refer readers to the CY 2005 OPPS final rule with comment period (69 FR 65842 through 65844) and subsequent OPPS rules for a detailed discussion of the history of these wage index adjustments as applied under the OPPS.

As discussed in the FY 2015 IPPS/LTCH PPS final rule (79 FR 49951 through 49963), the FY 2016 IPPS/LTCH PPS final rule (80 FR 49488 through 49489 and 49494 through 49496), and the FY 2017 IPPS/LTCH PPS final rule (81 FR 56913), the Office of Management and Budget (OMB) issued revisions to the labor market area delineations on February 28, 2013 (based on 2010 Decennial Census data), that included a number of significant changes such as new Core Based Statistical Areas (CBSAs), urban counties that became rural, rural counties that became urban, and existing CBSAs that were split apart (OMB Bulletin 13–01). This bulletin can be found at: *http://www.whitehouse.gov/sites/default/files/omb/bulletins/2013/b13-01.pdf*. In the FY 2015 IPPS/LTCH PPS final rule (79 FR 49950 through 49985), we adopted the use of the OMB labor market area delineations that were based on the 2010 Decennial Census data, effective October 1, 2014.

Generally, OMB issues major revisions to statistical areas every 10 years, based on the results of the decennial census. However, OMB occasionally issues minor updates and revisions to statistical areas in the years between the decennial censuses. On July 15, 2015, OMB issued OMB Bulletin No. 15–01, which provides updates to and supersedes OMB Bulletin No. 13–01 that was issued on February 28, 2013. The attachment to OMB Bulletin No. 15–01 provides detailed information on the update to statistical areas since February 28, 2013. The updates provided in OMB Bulletin No. 15–01 are based on the application of the 2010 Standards for Delineating Metropolitan and Micropolitan Statistical Areas to Census Bureau population estimates for July 1, 2012 and July 1, 2013. The complete list of statistical areas incorporating these changes is provided in the attachment to OMB Bulletin No. 15–01. According to OMB, ''[t]his bulletin establishes revised delineations for the Nation's Metropolitan Statistical Areas, Micropolitan Statistical Areas, and Combined Statistical Areas. The bulletin also provides delineations of Metropolitan Divisions as well as delineations of New England City and Town Areas.'' A copy of this bulletin may be obtained on the Web site at: *https://www.whitehouse.gov/omb/bulletins_default*.

OMB Bulletin No. 15–01 made the following changes that are relevant to the IPPS and OPPS wage index:

- Garfield County, OK, with principal city Enid, OK, which was a Micropolitan (geographically rural) area, now qualifies as an urban new CBSA 21420 called Enid, OK.
- The county of Bedford City, VA, a component of the Lynchburg, VA CBSA 31340, changed to town status and is added to Bedford County. Therefore, the county of Bedford City (SSA State county code 49088, FIPS State County Code 51515) is now part of the county of Bedford, VA (SSA State county code 49090, FIPS State County Code 51019). However, the CBSA remains Lynchburg, VA 31340.
- The name of Macon, GA, CBSA 31420, as well as a principal city of the Macon-Warner Robins, GA combined statistical area, is now Macon-Bibb County, GA. The CBSA code remains as 31420.

In the FY 2017 IPPS/LTCH PPS proposed rule (81 FR 25062), we proposed to implement these revisions, effective October 1, 2016, beginning with the FY 2017 wage indexes. In the FY 2017 IPPS/LTCH PPS proposed rule, we proposed to use these new definitions to calculate area IPPS wage indexes in a manner that is generally consistent with the CBSA-based methodologies finalized in the FY 2005 and the FY 2015 IPPS final rules. Implementation of these revisions for the IPPS/LTCH PPS was finalized in the FY 2017 IPPS/LTCH PPS final rule (81 FR 56913). We believe that it is important for the OPPS to use the latest labor market area delineations available as soon as is reasonably possible in order to maintain a more accurate and up-to-date payment system that reflects the reality of population shifts and labor market conditions. Therefore, for purposes of the OPPS, in the CY 2017 OPPS/ASC proposed rule (81 FR 45632), we proposed to implement these revisions to the OMB statistical area delineations, effective January 1, 2017, beginning with the CY 2017 OPPS wage indexes. We invited public comments on these proposals for the CY 2017 OPPS wage indexes. We note that Tables 2 and 3 for the FY 2017 IPPS/LTCH PPS final rule and the County to CBSA Crosswalk File and Urban CBSAs and Constituent Counties for Acute Care Hospitals File posted on the CMS Web site reflect the CBSA changes. These two tables are available via the Internet on the CMS Web site.

In the CY 2017 OPPS/ASC proposed rule, we proposed to use the FY 2017 hospital IPPS post-reclassified wage index for urban and rural areas as the wage index for the OPPS to determine the wage adjustments for both the OPPS payment rate and the copayment standardized amount for CY 2017. Therefore, we stated that any adjustments that were proposed for the FY 2017 IPPS post-reclassified wage index would be reflected in the proposed CY 2017 OPPS wage index, including the revisions to the OMB labor market delineations discussed above, as set forth in OMB Bulletin No.

15–01. (We refer readers to the FY 2017 IPPS/LTCH PPS proposed rule (81 FR 25062 through 25076) and final rule (81 FR 56912 through 56937), and the proposed and final FY 2017 hospital wage index files posted on the CMS Web site.)

Hospitals that are paid under the OPPS, but not under the IPPS, do not have an assigned hospital wage index under the IPPS. Therefore, for non-IPPS hospitals paid under the OPPS, it is our longstanding policy to assign the wage index that would be applicable if the hospital were paid under the IPPS, based on its geographic location and any applicable wage index adjustments. We proposed to continue this policy for CY 2017. The following is a brief summary of the major FY 2017 IPPS wage index policies and adjustments that we proposed to apply to these hospitals under the OPPS for CY 2017. We further refer readers to the FY 2017 IPPS/LTCH PPS final rule (81 FR 56912 through 56937) for a detailed discussion of the final changes to the FY 2017 IPPS wage indexes.

It has been our longstanding policy to allow non-IPPS hospitals paid under the OPPS to qualify for the out-migration adjustment if they are located in a section 505 out-migration county (section 505 of the Medicare Prescription Drug, Improvement, and Modernization Act of 2003 (MMA)). Applying this adjustment is consistent with our policy of adopting IPPS wage index policies for hospitals paid under the OPPS. We note that, because non-IPPS hospitals cannot reclassify, they would be eligible for the out-migration wage adjustment if they are located in a section 505 out-migration county. This is the same out-migration adjustment policy that would apply if the hospital were paid under the IPPS. For CY 2017, we proposed to continue our policy of allowing non-IPPS hospitals paid under the OPPS to qualify for the out-migration adjustment if they are located in a section 505 out-migration county (section 505 of the MMA).

As stated earlier, in the FY 2015 IPPS/LTCH PPS final rule, we adopted the OMB labor market area delineations issued by OMB in OMB Bulletin No. 13–01 on February 28, 2013, based on standards published on June 28, 2010 (75 FR 37246 through 37252) and the 2010 Census data to delineate labor market areas for purposes of the IPPS wage index. For IPPS wage index purposes, for hospitals that were located in urban CBSAs in FY 2014 but were designated as rural under these revised OMB labor market area delineations, we generally assigned them the urban wage index value of the CBSA in which they were physically located for FY 2014 for a period of 3 fiscal years (79 FR 49957 through 49960). To be consistent, we applied the same policy to hospitals paid under the OPPS but not under the IPPS so that such hospitals will maintain the wage index of the CBSA in which they were physically located for FY 2014 for 3 calendar years (until December 31, 2017). Therefore, for the CY 2017 OPPS, consistent with the FY 2017 IPPS/LTCH PPS final rule (81 FR 56912 through 56937), this 3-year transition will continue for the third year in CY 2017.

In addition, for the FY 2017 IPPS, we extended the imputed floor policy (both the original methodology and alternative methodology) for another year, through September 30, 2017 (81 FR 56919 through 56922). For purposes of the CY 2017 OPPS, we proposed to apply the imputed floor policy to hospitals paid under the OPPS but not under the IPPS so long as the IPPS continues an imputed floor policy.

For CMHCs, for CY 2017, we proposed to continue to calculate the wage index by using the post-reclassification IPPS wage index based on the CBSA where the CMHC is located. As with OPPS hospitals and for the same reasons, for CMHCs previously located in urban CBSAs that were designated as rural under the revised OMB labor market area delineations in OMB Bulletin No. 13–01, we finalized a policy to maintain the urban wage index value of the CBSA in which they were physically located for CY 2014 for 3 calendar years (until December 31, 2017). Consistent with our current policy, the wage index that applies to CMHCs includes both the imputed floor adjustment and the rural floor adjustment, but does not include the out-migration adjustment because that adjustment only applies to hospitals.

We did not receive any public comments on our proposals as discussed above.

Therefore, for the reasons discussed above and in the CY 2017 OPPS/ASC proposed rule, we are finalizing our proposals, without modification, to:

- Continue to use an OPPS labor-related share of 60 percent of the national OPPS payment for the CY 2017 OPPS;
- Use the final FY 2017 IPPS post-reclassified wage index for urban and rural areas in its entirety, including the frontier State wage index floor, the rural floor, geographic reclassifications, and all other applicable wage index adjustments, as the final CY 2017 wage index for OPPS hospitals and CMHCs based on where the facility is located for both the OPPS payment rate and the copayment standardized amount, as discussed above and as set forth in the CY 2017 OPPS/ASC proposed rule (81 FR 45631 through 45633). (We refer readers to the FY 2017 IPPS/LTCH PPS final rule (81 FR 56912 through 56937) and the final FY 2017 hospital wage index files posted on the CMS Web site.);
- Implement the revisions to the OMB statistical area delineations set forth in OMB Bulletin No. 15–01 effective January 1, 2017, beginning with the CY 2017 OPPS wage indexes;
- Implement the frontier State floor provisions in the same manner as we have since CY 2011 as discussed above;
- For non-IPPS hospitals paid under the OPPS, continue to assign the wage index that would be applicable if the hospital were paid under the IPPS, based on its geographic location and any applicable wage index adjustments;
- Apply the imputed floor policy to hospitals paid under the OPPS but not under the IPPS so long as the IPPS continues an imputed floor policy, which CMS has extended for an additional year under the IPPS in the FY 2017 IPPS/LTCH PPS final rule; and
- Continue our policy of allowing non-IPPS hospitals paid under the OPPS to qualify for the out-migration adjustment if they are located in a section 505 out-migration county (section 505 of the MMA).

Table 2 associated with the FY 2017 IPPS/LTCH PPS final rule (available via the Internet on the CMS Web site at: *http://www.cms.gov/Medicare/Medicare-Fee-for-Service-Payment/AcuteInpatientPPS/index.html*) identifies counties eligible for the out-migration adjustment and IPPS hospitals that will receive the adjustment for FY 2017. We are including the out-migration adjustment information from Table 2 associated with the FY 2017 IPPS/LTCH PPS final rule as Addendum L to this final rule with comment period with the addition of non-IPPS hospitals that will receive the section 505 out-migration adjustment under the CY 2017 OPPS. Addendum L is available via the Internet on the CMS Web site. We refer readers to the CMS Web site for the OPPS at: *http://www.cms.gov/Medicare/Medicare-Fee-for-Service-Payment/HospitalOutpatientPPS/index.html*. At this link, readers will find a link to the final FY 2017 IPPS wage index tables and Addendum L.

D. Statewide Average Default CCRs

In addition to using CCRs to estimate costs from charges on claims for ratesetting, CMS uses overall hospital-specific CCRs calculated from the

hospital's most recent cost report to determine outlier payments, payments for pass-through devices, and monthly interim transitional corridor payments under the OPPS during the PPS year. MACs cannot calculate a CCR for some hospitals because there is no cost report available. For these hospitals, CMS uses the statewide average default CCRs to determine the payments mentioned above until a hospital's MAC is able to calculate the hospital's actual CCR from its most recently submitted Medicare cost report. These hospitals include, but are not limited to, hospitals that are new, hospitals that have not accepted assignment of an existing hospital's provider agreement, and hospitals that have not yet submitted a cost report. CMS also uses the statewide average default CCRs to determine payments for hospitals that appear to have a biased CCR (that is, the CCR falls outside the predetermined ceiling threshold for a valid CCR) or for hospitals in which the most recent cost report reflects an all-inclusive rate status (Medicare Claims Processing Manual (Pub. 100–04), Chapter 4, Section 10.11).

In the CY 2017 OPPS/ASC proposed rule (81 FR 45633), we proposed to update the default ratios for CY 2017 using the most recent cost report data. We discussed our policy for using default CCRs, including setting the ceiling threshold for a valid CCR, in the CY 2009 OPPS/ASC final rule with comment period (73 FR 68594 through 68599) in the context of our adoption of an outlier reconciliation policy for cost reports beginning on or after January 1, 2009. For detail on our process for calculating the statewide average CCRs, we referred readers to the CY 2017 OPPS proposed rule Claims Accounting Narrative that was posted on the CMS Web site. Table 4 published in the proposed rule (81 FR 45634 through 45635) listed the proposed statewide average default CCRs for OPPS services furnished on or after January 1, 2017.

We did not receive any public comments on the proposed statewide average default CCR policy. Therefore, we are finalizing our proposal, without modification, to apply our standard methodology of calculating the statewide average default CCRs using the same hospital overall CCRs that we used to adjust charges to costs on claims data for setting the final CY 2017 OPPS relative payment weights. Table 4 below lists the statewide average default CCRs for OPPS services furnished on or after January 1, 2017 based on final rule data.

TABLE 4—CY 2017 STATEWIDE AVERAGE CCRS

State	Urban/rural	CY 2017 default CCR	Previous default CCR (CY 2016 OPPS final rule)
ALASKA	RURAL	0.449	0.588
ALASKA	URBAN	0.237	0.269
ALABAMA	RURAL	0.196	0.224
ALABAMA	URBAN	0.158	0.168
ARKANSAS	RURAL	0.196	0.223
ARKANSAS	URBAN	0.205	0.218
ARIZONA	RURAL	0.238	0.246
ARIZONA	URBAN	0.176	0.170
CALIFORNIA	RURAL	0.179	0.179
CALIFORNIA	URBAN	0.188	0.190
COLORADO	RURAL	0.354	0.366
COLORADO	URBAN	0.208	0.208
CONNECTICUT	RURAL	0.402	0.366
CONNECTICUT	URBAN	0.253	0.257
DISTRICT OF COLUMBIA	URBAN	0.286	0.298
DELAWARE	URBAN	0.288	0.308
FLORIDA	RURAL	0.169	0.170
FLORIDA	URBAN	0.143	0.150
GEORGIA	RURAL	0.230	0.251
GEORGIA	URBAN	0.196	0.199
HAWAII	RURAL	0.338	0.339
HAWAII	URBAN	0.319	0.313
IOWA	RURAL	0.291	0.305
IOWA	URBAN	0.252	0.256
IDAHO	RURAL	0.341	0.337
IDAHO	URBAN	0.401	0.459
ILLINOIS	RURAL	0.241	0.234
ILLINOIS	URBAN	0.209	0.208
INDIANA	RURAL	0.272	0.314
INDIANA	URBAN	0.218	0.237
KANSAS	RURAL	0.269	0.287
KANSAS	URBAN	0.194	0.209
KENTUCKY	RURAL	0.194	0.202
KENTUCKY	URBAN	0.189	0.203
LOUISIANA	RURAL	0.217	0.256
LOUISIANA	URBAN	0.201	0.202
MASSACHUSETTS	RURAL	0.316	0.324
MASSACHUSETTS	URBAN	0.345	0.330
MAINE	RURAL	0.425	0.470
MAINE	URBAN	0.413	0.395
MARYLAND	RURAL	0.264	0.277
MARYLAND	URBAN	0.229	0.234
MICHIGAN	RURAL	0.295	0.317
MICHIGAN	URBAN	0.324	0.319

TABLE 4—CY 2017 STATEWIDE AVERAGE CCRS—Continued

State	Urban/rural	CY 2017 default CCR	Previous default CCR (CY 2016 OPPS final rule)
MINNESOTA	RURAL	0.398	0.449
MINNESOTA	URBAN	0.319	0.377
MISSOURI	RURAL	0.222	0.238
MISSOURI	URBAN	0.261	0.253
MISSISSIPPI	RURAL	0.224	0.235
MISSISSIPPI	URBAN	0.167	0.169
MONTANA	RURAL	0.450	0.480
MONTANA	URBAN	0.368	0.403
NORTH CAROLINA	RURAL	0.216	0.229
NORTH CAROLINA	URBAN	0.223	0.235
NORTH DAKOTA	RURAL	0.411	0.443
NORTH DAKOTA	URBAN	0.334	0.355
NEBRASKA	RURAL	0.294	0.283
NEBRASKA	URBAN	0.238	0.238
NEW HAMPSHIRE	RURAL	0.320	0.306
NEW HAMPSHIRE	URBAN	0.279	0.306
NEW JERSEY	URBAN	0.195	0.194
NEW MEXICO	RURAL	0.225	0.280
NEW MEXICO	URBAN	0.280	0.290
NEVADA	RURAL	0.196	0.219
NEVADA	URBAN	0.123	0.146
NEW YORK	RURAL	0.309	0.311
NEW YORK	URBAN	0.292	0.298
OHIO	RURAL	0.292	0.295
OHIO	URBAN	0.207	0.212
OKLAHOMA	RURAL	0.231	0.255
OKLAHOMA	URBAN	0.180	0.192
OREGON	RURAL	0.280	0.265
OREGON	URBAN	0.344	0.341
PENNSYLVANIA	RURAL	0.274	0.277
PENNSYLVANIA	URBAN	0.179	0.195
PUERTO RICO	URBAN	0.527	0.590
RHODE ISLAND	URBAN	0.291	0.290
SOUTH CAROLINA	RURAL	0.185	0.188
SOUTH CAROLINA	URBAN	0.190	0.197
SOUTH DAKOTA	RURAL	0.383	0.367
SOUTH DAKOTA	URBAN	0.229	0.224
TENNESSEE	RURAL	0.181	0.198
TENNESSEE	URBAN	0.180	0.177
TEXAS	RURAL	0.214	0.238
TEXAS	URBAN	0.177	0.179
UTAH	RURAL	0.349	0.493
UTAH	URBAN	0.315	0.325
VIRGINIA	RURAL	0.191	0.195
VIRGINIA	URBAN	0.226	0.233
VERMONT	RURAL	0.426	0.434
VERMONT	URBAN	0.340	0.336
WASHINGTON	RURAL	0.271	0.349
WASHINGTON	URBAN	0.294	0.308
WISCONSIN	RURAL	0.354	0.317
WISCONSIN	URBAN	0.290	0.296
WEST VIRGINIA	RURAL	0.266	0.276
WEST VIRGINIA	URBAN	0.285	0.294
WYOMING	RURAL	0.429	0.433
WYOMING	URBAN	0.311	0.311

E. Adjustment for Rural SCHs and EACHs Under Section 1833(t)(13)(B) of the Act

In the CY 2006 OPPS final rule with comment period (70 FR 68556), we finalized a payment increase for rural SCHs of 7.1 percent for all services and procedures paid under the OPPS, excluding drugs, biologicals, brachytherapy sources, and devices paid under the pass-through payment policy in accordance with section 1833(t)(13)(B) of the Act, as added by section 411 of the Medicare Prescription Drug, Improvement, and Modernization Act of 2003 (MMA) (Pub. L. 108–173). Section 1833(t)(13) of the Act provided the Secretary the authority to make an adjustment to OPPS payments for rural hospitals, effective January 1, 2006, if justified by a study of the difference in costs by APC between hospitals in rural areas and hospitals in urban areas. Our analysis showed a difference in costs for rural SCHs. Therefore, for the CY 2006 OPPS, we finalized a payment adjustment for rural SCHs of 7.1 percent for all services and procedures paid under the OPPS, excluding separately

payable drugs and biologicals, brachytherapy sources, and devices paid under the pass-through payment policy, in accordance with section 1833(t)(13)(B) of the Act.

In the CY 2007 OPPS/ASC final rule with comment period (71 FR 68010 and 68227), for purposes of receiving this rural adjustment, we revised § 419.43(g) of the regulations to clarify that EACHs also are eligible to receive the rural SCH adjustment, assuming these entities otherwise meet the rural adjustment criteria. Currently, two hospitals are classified as EACHs, and as of CY 1998, under section 4201(c) of Public Law 105–33, a hospital can no longer become newly classified as an EACH.

This adjustment for rural SCHs is budget neutral and applied before calculating outlier payments and copayments. We stated in the CY 2006 OPPS final rule with comment period (70 FR 68560) that we would not reestablish the adjustment amount on an annual basis, but we may review the adjustment in the future and, if appropriate, would revise the adjustment. We provided the same 7.1 percent adjustment to rural SCHs, including EACHs, again in CYs 2008 through 2016. Further, in the CY 2009 OPPS/ASC final rule with comment period (73 FR 68590), we updated the regulations at § 419.43(g)(4) to specify, in general terms, that items paid at charges adjusted to costs by application of a hospital-specific CCR are excluded from the 7.1 percent payment adjustment.

In the CY 2017 OPPS/ASC proposed rule (81 FR 45635), for the CY 2017 OPPS, we proposed to continue our policy of a 7.1 percent payment adjustment that is done in a budget neutral manner for rural SCHs, including EACHs, for all services and procedures paid under the OPPS, excluding separately payable drugs and biologicals, devices paid under the pass-through payment policy, and items paid at charges reduced to costs (80 FR 39244).

Comment: Commenters supported the proposed payment adjustment for rural SCHs and EACHs, and stated that this adjustment would support access to care in rural areas.

Response: We appreciate the commenters' support.

After consideration of the public comments we received, we are finalizing the proposal for CY 2017 to continue our policy of a 7.1 percent payment adjustment that is done in a budget neutral manner for rural SCHs, including EACHs, for all services and procedures paid under the OPPS, excluding separately payable drugs and biologicals, devices paid under the pass-through payment policy, and items paid at charges reduced to costs.

F. Payment Adjustment for Certain Cancer Hospitals for CY 2017

1. Background

Since the inception of the OPPS, which was authorized by the Balanced Budget Act of 1997 (BBA) (Pub. L. 105–33), Medicare has paid the 11 hospitals that meet the criteria for cancer hospitals identified in section 1886(d)(1)(B)(v) of the Act under the OPPS for covered outpatient hospital services. These cancer hospitals are exempted from payment under the IPPS. With the Medicare, Medicaid and SCHIP Balanced Budget Refinement Act of 1999 (Pub. L. 106–113), Congress established section 1833(t)(7) of the Act, ''Transitional Adjustment to Limit Decline in Payment,'' to determine OPPS payments to cancer and children's hospitals based on their pre-BBA payment amount (often referred to as ''held harmless'').

As required under section 1833(t)(7)(D)(ii) of the Act, a cancer hospital receives the full amount of the difference between payments for covered outpatient services under the OPPS and a ''pre-BBA amount.'' That is, cancer hospitals are permanently held harmless to their ''pre-BBA amount,'' and they receive transitional outpatient payments (TOPs) or hold harmless payments to ensure that they do not receive a payment that is lower in amount under the OPPS than the payment amount they would have received before implementation of the OPPS, as set forth in section 1833(t)(7)(F) of the Act. The ''pre-BBA amount'' is the product of the hospital's reasonable costs for covered outpatient services occurring in the current year and the base payment-to-cost ratio (PCR) for the hospital defined in section 1833(t)(7)(F)(ii) of the Act. The ''pre-BBA amount'' and the determination of the base PCR are defined at 42 CFR 419.70(f). TOPs are calculated on Worksheet E, Part B, of the Hospital Cost Report or the Hospital Health Care Complex Cost Report (Form CMS–2552–96 or Form CMS–2552–10, respectively) as applicable each year. Section 1833(t)(7)(I) of the Act exempts TOPs from budget neutrality calculations.

Section 3138 of the Affordable Care Act amended section 1833(t) of the Act by adding a new paragraph (18), which instructs the Secretary to conduct a study to determine if, under the OPPS, outpatient costs incurred by cancer hospitals described in section 1886(d)(1)(B)(v) of the Act with respect to APC groups exceed outpatient costs incurred by other hospitals furnishing services under section 1833(t) of the Act, as determined appropriate by the Secretary. Section 1833(t)(18)(A) of the Act requires the Secretary to take into consideration the cost of drugs and biologicals incurred by cancer hospitals and other hospitals. Section 1833(t)(18)(B) of the Act provides that, if the Secretary determines that cancer hospitals' costs, the Secretary shall provide an appropriate adjustment under section 1833(t)(2)(E) of the Act to reflect these higher costs. In 2011, after conducting the study required by section 1833(t)(18)(A) of the Act, we determined that outpatient costs incurred by the 11 specified cancer hospitals were greater than the costs incurred by other OPPS hospitals. For a complete discussion regarding the cancer hospital cost study, we refer readers to the CY 2012 OPPS/ASC final rule with comment period (76 FR 74200 through 74201).

Based on these findings, we finalized a policy to provide a payment adjustment to the 11 specified cancer hospitals that reflects their higher outpatient costs as discussed in the CY 2012 OPPS/ASC final rule with comment period (76 FR 74202 through 74206). Specifically, we adopted a policy to provide additional payments to the cancer hospitals so that each cancer hospital's final PCR for services provided in a given calendar year is equal to the weighted average PCR (which we refer to as the ''target PCR'') for other hospitals paid under the OPPS. The target PCR is set in advance of the calendar year and is calculated using the most recent submitted or settled cost report data that are available at the time of final rulemaking for the calendar year. The amount of the payment adjustment is made on an aggregate basis at cost report settlement. We note that the changes made by section 1833(t)(18) of the Act do not affect the existing statutory provisions that provide for TOPs for cancer hospitals. The TOPs are assessed as usual after all payments, including the cancer hospital payment adjustment, have been made for a cost reporting period. For CYs 2012 and 2013, the target PCR for purposes of the cancer hospital payment adjustment was 0.91. For CY 2014, the target PCR for purposes of the cancer hospital payment adjustment was 0.89. For CY 2015, the target PCR was 0.90. For CY 2016, the target PCR was 0.92, as discussed in the CY 2016 OPPS/ASC final rule with comment period (80 FR 70362 through 70363).

b. Proposed and Finalized Policy for CY 2017

In the CY 2017 OPPS/ASC proposed rule (81 FR 45636), for CY 2017, we proposed to continue our policy to provide additional payments to the 11 specified cancer hospitals so that each cancer hospital's final PCR is equal to the weighted average PCR (or ''target PCR'') for the other OPPS hospitals using the most recent submitted or settled cost report data that are available at the time of the development of the proposed rule. To calculate the proposed CY 2017 target PCR, we used the same extract of cost report data from HCRIS, as discussed in section II.A. of the proposed rule, used to estimate costs for the CY 2017 OPPS. Using these cost report data, we included data from Worksheet E, Part B, for each hospital, using data from each hospital's most recent cost report, whether as submitted or settled.

We then limited the dataset to the hospitals with CY 2015 claims data that we used to model the impact of the proposed CY 2017 APC relative payment weights (3,716 hospitals) because it is appropriate to use the same set of hospitals that we are using to calibrate the modeled CY 2017 OPPS. The cost report data for the hospitals in this dataset were from cost report periods with fiscal year ends ranging from 2012 to 2015. We then removed the cost report data of the 50 hospitals located in Puerto Rico from our dataset because we do not believe that their cost structure reflects the costs of most hospitals paid under the OPPS and, therefore, their inclusion may bias the calculation of hospital-weighted statistics. We also removed the cost report data of 14 hospitals because these hospitals had cost report data that were not complete (missing aggregate OPPS payments, missing aggregate cost data, or missing both), so that all cost reports in the study would have both the payment and cost data necessary to calculate a PCR for each hospital, leading to a proposed analytic file of 3,652 hospitals with cost report data.

Using this smaller dataset of cost report data, we estimated that, on average, the OPPS payments to other hospitals furnishing services under the OPPS were approximately 92 percent of reasonable cost (weighted average PCR of 0.92). Therefore, we proposed that the payment amount associated with the cancer hospital payment adjustment to be determined at cost report settlement would be the additional payment needed to result in a proposed target PCR equal to 0.92 for each cancer hospital. Table 5 of the proposed rule indicated the proposed estimated percentage increase in OPPS payments to each cancer hospital for CY 2017 due to the cancer hospital payment adjustment policy.

Comment: Several commenters supported the proposed cancer hospital payment adjustment for CY 2017.

Response: We appreciate the commenters' support.

After consideration of the public comments we received, we are finalizing our cancer hospital payment adjustment methodology as proposed. For this final rule with comment period, we are using the most recent cost report data through June 30, 2016 to update the adjustment. This update yields a target PCR of 0.91. We limited the dataset to the hospitals with CY 2015 claims data that we used to model the impact of the CY 2017 APC relative payment weights (3,744 hospitals) because it is appropriate to use the same set of hospitals that we are using to calibrate the modeled CY 2017 OPPS. The cost report data for the hospitals in this dataset were from cost report periods with fiscal year ends ranging from 2012 to 2016. We then removed the cost report data of the 49 hospitals located in Puerto Rico from our dataset because we do not believe that their cost structure reflects the costs of most hospitals paid under the OPPS and, therefore, their inclusion may bias the calculation of hospital-weighted statistics. We also removed the cost report data of 13 hospitals because these hospitals had cost report data that were not complete (missing aggregate OPPS payments, missing aggregate cost data, or missing both), so that all cost reports in the study would have both the payment and cost data necessary to calculate a PCR for each hospital, leading to a proposed analytic file of 3,682 hospitals with cost report data.

Using this smaller dataset of cost report data, we estimated that, on average, the OPPS payments to other hospitals furnishing services under the OPPS are approximately 91 percent of reasonable cost (weighted average PCR of 0.91). Therefore, we are finalizing that the payment amount associated with the cancer hospital payment adjustment to be determined at cost report settlement will be the additional payment needed to result in a PCR equal to 0.91 for each cancer hospital.

Table 5 below indicates the final estimated percentage increase in OPPS payments to each cancer hospital for CY 2017 due to the finalized cancer hospital payment adjustment policy. The actual amount of the CY 2017 cancer hospital payment adjustment for each cancer hospital will be determined at cost report settlement and will depend on each hospital's CY 2017 payments and costs. We note that the requirements contained in section 1833(t)(18) of the Act do not affect the existing statutory provisions that provide for TOPs for cancer hospitals. The TOPs will be assessed as usual after all payments, including the cancer hospital payment adjustment, have been made for a cost reporting period.

TABLE 5—ESTIMATED CY 2017 HOSPITAL-SPECIFIC PAYMENT ADJUSTMENT FOR CANCER HOSPITALS TO BE PROVIDED AT COST REPORT SETTLEMENT

Provider No.	Hospital name	Estimated percentage increase in OPPS payments for CY 2017 due to payment adjustment (%)
050146	City of Hope Comprehensive Cancer Center	25.8
050660	USC Norris Cancer Hospital	14.0
100079	Sylvester Comprehensive Cancer Center	32.4
100271	H. Lee Moffitt Cancer Center & Research Institute	27.3
220162	Dana-Farber Cancer Institute	49.8
330154	Memorial Sloan-Kettering Cancer Center	50.4
330354	Roswell Park Cancer Institute	30.0
360242	James Cancer Hospital & Solove Research Institute	37.9
390196	Fox Chase Cancer Center	16.6
450076	M.D. Anderson Cancer Center	52.3

TABLE 5—ESTIMATED CY 2017 HOSPITAL-SPECIFIC PAYMENT ADJUSTMENT FOR CANCER HOSPITALS TO BE PROVIDED AT COST REPORT SETTLEMENT—Continued

Provider No.	Hospital name	Estimated percentage increase in OPPS payments for CY 2017 due to payment adjustment (%)
500138	Seattle Cancer Care Alliance	58.7

G. Hospital Outpatient Outlier Payments

1. Background

The OPPS provides outlier payments to hospitals to help mitigate the financial risk associated with high-cost and complex procedures, where a very costly service could present a hospital with significant financial loss. As explained in the CY 2015 OPPS/ASC final rule with comment period (79 FR 66832 through 66834), we set our projected target for aggregate outlier payments at 1.0 percent of the estimated aggregate total payments under the OPPS for the prospective year. Outlier payments are provided on a service-by-service basis when the cost of a service exceeds the APC payment amount multiplier threshold (the APC payment amount multiplied by a certain amount) as well as the APC payment amount plus a fixed-dollar amount threshold (the APC payment plus a certain amount of dollars). In CY 2016, the outlier threshold was met when the hospital's cost of furnishing a service exceeded 1.75 times (the multiplier threshold) the APC payment amount and exceeded the APC payment amount plus $3,250 (the fixed-dollar amount threshold) (80 FR 70365). If the cost of a service exceeds both the multiplier threshold and the fixed-dollar threshold, the outlier payment is calculated as 50 percent of the amount by which the cost of furnishing the service exceeds 1.75 times the APC payment amount. Beginning with CY 2009 payments, outlier payments are subject to a reconciliation process similar to the IPPS outlier reconciliation process for cost reports, as discussed in the CY 2009 OPPS/ASC final rule with comment period (73 FR 68594 through 68599).

It has been our policy to report the actual amount of outlier payments as a percent of total spending in the claims being used to model the OPPS. In the CY 2017 OPPS/ASC proposed rule (81 FR 45637), we indicated that our estimate of total outlier payments as a percent of total CY 2015 OPPS payment, using CY 2015 claims available for the proposed rule and the revised OPPS expenditure estimate for the FY 2016 President's Budget, was approximately 1.0 percent of the total aggregated OPPS payments. For CY 2015, we continue to estimate that we paid the outlier target of 1.0 percent of total aggregated OPPS payments.

As stated in the proposed rule, using CY 2015 claims data and CY 2016 payment rates, we estimated that the aggregate outlier payments for CY 2016 would be approximately 1.0 percent of the total CY 2016 OPPS payments. Using an updated claims dataset and OPPS ancillary CCRs, we estimate that we paid approximately 0.96 percent of the total CY 2016 OPPS payments, in OPPS outliers. We provided estimated CY 2017 outlier payments for hospitals and CMHCs with claims included in the claims data that we used to model impacts in the Hospital–Specific Impacts—Provider-Specific Data file on the CMS Web site at: *https://www.cms.gov/Medicare/Medicare-Fee-for-Service-Payment/HospitalOutpatientPPS/index.html*.

2. Outlier Calculation for CY 2017

In the CY 2017 OPPS/ASC proposed rule (81 FR 45637), for CY 2017, we proposed to continue our policy of estimating outlier payments to be 1.0 percent of the estimated aggregate total payments under the OPPS. We proposed that a portion of that 1.0 percent, an amount equal to less than 0.01 percent of outlier payments (or 0.0001 percent of total OPPS payments) would be allocated to CMHCs for PHP outlier payments. This is the amount of estimated outlier payments that would result from the proposed CMHC outlier threshold as a proportion of total estimated OPPS outlier payments. As discussed in section VIII.C. of the proposed rule and this final rule with comment period, we proposed to continue our longstanding policy that if a CMHC's cost for partial hospitalization services, paid under proposed APC 5853 (Partial Hospitalization for CMHCs), exceeds 3.40 times the payment rate for proposed APC 5853, the outlier payment would be calculated as 50 percent of the amount by which the cost exceeds 3.40 times the proposed APC 5853 payment rate. For further discussion of CMHC outlier payments, we refer readers to section VIII.D. of the proposed rule and this final rule with comment period.

To ensure that the estimated CY 2017 aggregate outlier payments would equal 1.0 percent of estimated aggregate total payments under the OPPS, we proposed that the hospital outlier threshold be set so that outlier payments would be triggered when a hospital's cost of furnishing a service exceeds 1.75 times the APC payment amount and exceeds the APC payment amount plus $3,825.

We calculated the proposed fixed-dollar threshold of $3,825 using the standard methodology most recently used for CY 2016 (80 FR 70364 through 70365). For purposes of estimating outlier payments for the proposed rule, we used the hospital-specific overall ancillary CCRs available in the April 2016 update to the Outpatient Provider-Specific File (OPSF). The OPSF contains provider-specific data, such as the most current CCRs, which are maintained by the MACs and used by the OPPS Pricer to pay claims. The claims that we use to model each OPPS update lag by 2 years.

In order to estimate the CY 2017 hospital outlier payments for the proposed rule, we inflated the charges on the CY 2015 claims using the same inflation factor of 1.0898 that we used to estimate the IPPS fixed-dollar outlier threshold for the FY 2017 IPPS/LTCH PPS proposed rule (81 FR 25270 through 25273). We used an inflation factor of 1.0440 to estimate CY 2016 charges from the CY 2015 charges reported on CY 2015 claims. The methodology for determining this charge inflation factor is discussed in the FY 2017 IPPS/LTCH PPS final rule (81 FR 57286). As we stated in the CY 2005 OPPS final rule with comment period (69 FR 65845), we believe that the use of these charge inflation factors are appropriate for the OPPS because, with the exception of the inpatient routine service cost centers, hospitals use the same ancillary and outpatient cost centers to capture costs and charges for inpatient and outpatient services.

As noted in the CY 2007 OPPS/ASC final rule with comment period (71 FR 68011), we are concerned that we could systematically overestimate the OPPS hospital outlier threshold if we did not apply a CCR inflation adjustment factor. Therefore, we proposed to apply the same CCR inflation adjustment factor that we proposed to apply for the FY 2017 IPPS outlier calculation to the CCRs used to simulate the proposed CY 2017 OPPS outlier payments to determine the fixed-dollar threshold. Specifically, for CY 2017, we proposed to apply an adjustment factor of 0.9696 to the CCRs that were in the April 2016 OPSF to trend them forward from CY 2016 to CY 2017. The methodology for calculating this proposed adjustment was discussed in the FY 2017 IPPS/LTCH PPS proposed rule (81 FR 25272).

To model hospital outlier payments for the proposed rule, we applied the overall CCRs from the April 2016 OPSF after adjustment (using the proposed CCR inflation adjustment factor of 0.9696 to approximate CY 2017 CCRs) to charges on CY 2015 claims that were adjusted (using the proposed charge inflation factor of 1.0898 to approximate CY 2017 charges). We simulated aggregated CY 2017 hospital outlier payments using these costs for several different fixed-dollar thresholds, holding the 1.75 multiplier threshold constant and assuming that outlier payments would continue to be made at 50 percent of the amount by which the cost of furnishing the service would exceed 1.75 times the APC payment amount, until the total outlier payments equaled 1.0 percent of aggregated estimated total CY 2017 OPPS payments. We estimated that a proposed fixed-dollar threshold of $3,825, combined with the proposed multiplier threshold of 1.75 times the APC payment rate, would allocate 1.0 percent of aggregated total OPPS payments to outlier payments. For CMHCs, we proposed that, if a CMHC's cost for partial hospitalization services, paid under APC 5853, exceeds 3.40 times the payment rate for APC 5853, the outlier payment would be calculated as 50 percent of the amount by which the cost exceeds 3.40 times the APC 5853 payment rate.

Section 1833(t)(17)(A) of the Act, which applies to hospitals as defined under section 1886(d)(1)(B) of the Act, requires that hospitals that fail to report data required for the quality measures selected by the Secretary, in the form and manner required by the Secretary under section 1833(t)(17)(B) of the Act, incur a 2.0 percentage point reduction to their OPD fee schedule increase factor; that is, the annual payment update factor. The application of a reduced OPD fee schedule increase factor results in reduced national unadjusted payment rates that will apply to certain outpatient items and services furnished by hospitals that are required to report outpatient quality data and that fail to meet the Hospital OQR Program requirements. For hospitals that fail to meet the Hospital OQR Program requirements, we proposed to continue the policy that we implemented in CY 2010 that the hospitals' costs will be compared to the reduced payments for purposes of outlier eligibility and payment calculation. For more information on the Hospital OQR Program, we refer readers to section XIII. of this final rule with comment period.

Comment: One commenter suggested that the OPPS outlier fixed-dollar threshold of $3,825 was too high for CMS to pay the target aggregate outlier payment amount of 1.0 percent of the estimated aggregate total payments under the OPPS for the prospective year. The commenter suggested that CMS reduce the OPPS outlier threshold to compensate for the difference between the proposed and final fixed-dollar thresholds for outlier payments under the IPPS.

Response: As indicated earlier, we introduced a fixed-dollar threshold in order to better target outlier payments to those high-cost and complex procedures where a very costly service could present a hospital with significant financial loss. We maintain the target outlier percentage of 1.0 percent of estimated aggregate total payment under the OPPS and have a fixed-dollar threshold so that OPPS outlier payments are made only when the hospital would experience a significant loss for furnishing a particular service. The methodology we use to calculate the fixed-dollar threshold for the prospective payment year factors is based on several data inputs that may change from prior payment years. For instance, updated hospital CCR data and changes to the OPPS payment methodology influence projected outlier payments in the prospective year. For this final rule with comment period, we used the same methodology for calculating the outlier fixed-dollar threshold that we used for the proposed rule but used updated data. We do not believe that incorporating the percentage difference between the proposed and final fixed-dollar loss thresholds under the IPPS would improve our methodology to meet our target outlier payment percentage of 1.0 percent.

After consideration of the public comments we received, we are finalizing our proposal to continue our policy of estimating outlier payments to be 1.0 percent of the estimated aggregate total payments under the OPPS and to use our established methodology to set the OPPS outlier fixed-dollar loss threshold for CY 2017.

3. Final Outlier Calculation

Consistent with historical practice, we used updated data for this final rule with comment period for outlier calculations. For CY 2017, we are applying the overall CCRs from the July 2016 OPSF file after adjustment (using the CCR inflation adjustment factor of 0.9688 to approximate CY 2017 CCRs) to charges on CY 2015 claims that were adjusted (using the charge inflation factor of 1.0984 to approximate CY 2017 charges). These are the same CCR adjustment and charge inflation factors that were used to set the IPPS fixed-dollar thresholds for the FY 2017 IPPS/LTCH PPS final rule (81 FR 57286). We simulated aggregated CY 2017 hospital outlier payments using these costs for several different fixed-dollar thresholds, holding the 1.75 multiple threshold constant and assuming that outlier payments will continue to be made at 50 percent of the amount by which the cost of furnishing the service would exceed 1.75 times the APC payment amount, until the total outlier payments equaled 1.0 percent of aggregated estimated total CY 2017 OPPS payments. We estimated that a fixed-dollar threshold of $3,825, combined with the multiple threshold of 1.75 times the APC payment rate, will allocate 1.0 percent of aggregated total OPPS payments to outlier payments. For CMHCs, if a CMHC's cost for partial hospitalization services, paid under APC 5853 exceeds 3.40 times the payment rate, the outlier payment will be calculated as 50 percent of the amount by which the cost exceeds 3.40 times APC 5853.

H. Calculation of an Adjusted Medicare Payment From the National Unadjusted Medicare Payment

The basic methodology for determining prospective payment rates for HOPD services under the OPPS is set forth in existing regulations at 42 CFR part 419, subparts C and D. For this CY 2017 OPPS/ASC final rule with comment period, the payment rate for most services and procedures for which payment is made under the OPPS is the product of the conversion factor calculated in accordance with section II.B. of this final rule with comment period and the relative payment weight determined under section II.A. of this

final rule with comment period. Therefore, the national unadjusted payment rate for most APCs contained in Addendum A to this final rule with comment period (which is available via the Internet on the CMS Web site) and for most HCPCS codes to which separate payment under the OPPS has been assigned in Addendum B to this final rule with comment period (which is available via the Internet on the CMS Web site) was calculated by multiplying the CY 2017 scaled weight for the APC by the CY 2017 conversion factor.

We note that section 1833(t)(17) of the Act, which applies to hospitals as defined under section 1886(d)(1)(B) of the Act, requires that hospitals that fail to submit data required to be submitted on quality measures selected by the Secretary, in the form and manner and at a time specified by the Secretary, incur a reduction of 2.0 percentage points to their OPD fee schedule increase factor, that is, the annual payment update factor. The application of a reduced OPD fee schedule increase factor results in reduced national unadjusted payment rates that apply to certain outpatient items and services provided by hospitals that are required to report outpatient quality data and that fail to meet the Hospital OQR Program (formerly referred to as the Hospital Outpatient Quality Data Reporting Program (HOP QDRP)) requirements. For further discussion of the payment reduction for hospitals that fail to meet the requirements of the Hospital OQR Program, we refer readers to section XIII. of this final rule with comment period.

In the CY 2017 OPPS/ASC proposed rule (81 FR 45638), we demonstrated the steps on how to determine the APC payments that will be made in a calendar year under the OPPS to a hospital that fulfills the Hospital OQR Program requirements and to a hospital that fails to meet the Hospital OQR Program requirements for a service that has any of the following status indicator assignments: ''J1,'' ''J2,'' ''P,'' ''Q1,'' ''Q2,'' ''Q3,'' ''Q4,'' ''R,'' ''S,'' ''T,'' ''U,'' or ''V'' (as defined in Addendum D1 to the proposed rule, which is available via the Internet on the CMS Web site), in a circumstance in which the multiple procedure discount does not apply, the procedure is not bilateral, and conditionally packaged services (status indicator of ''Q1'' and ''Q2'') qualify for separate payment. We noted that, although blood and blood products with status indicator ''R'' and brachytherapy sources with status indicator ''U'' are not subject to wage adjustment, they are subject to reduced payments when a hospital fails to meet the Hospital OQR Program requirements.

We did not receive any public comments on these steps under the methodology that we included in the proposed rule to determine the APC payments for CY 2017. Therefore, we are using the steps in the methodology specified below, as we proposed, to demonstrate the calculation of the final CY 2017 OPPS payments using the same parameters.

Individual providers interested in calculating the payment amount that they will receive for a specific service from the national unadjusted payment rates presented in Addenda A and B to this final rule with comment period (which are available via the Internet on the CMS Web site) should follow the formulas presented in the following steps. For purposes of the payment calculations below, we refer to the national unadjusted payment rate for hospitals that meet the requirements of the Hospital OQR Program as the ''full'' national unadjusted payment rate. We refer to the national unadjusted payment rate for hospitals that fail to meet the requirements of the Hospital OQR Program as the ''reduced'' national unadjusted payment rate. The reduced national unadjusted payment rate is calculated by multiplying the reporting ratio of 0.980 times the ''full'' national unadjusted payment rate. The national unadjusted payment rate used in the calculations below is either the full national unadjusted payment rate or the reduced national unadjusted payment rate, depending on whether the hospital met its Hospital OQR Program requirements in order to receive the full CY 2017 OPPS fee schedule increase factor.

Step 1. Calculate 60 percent (the labor-related portion) of the national unadjusted payment rate. Since the initial implementation of the OPPS, we have used 60 percent to represent our estimate of that portion of costs attributable, on average, to labor. We refer readers to the April 7, 2000 OPPS final rule with comment period (65 FR 18496 through 18497) for a detailed discussion of how we derived this percentage. During our regression analysis for the payment adjustment for rural hospitals in the CY 2006 OPPS final rule with comment period (70 FR 68553), we confirmed that this labor-related share for hospital outpatient services is appropriate.

The formula below is a mathematical representation of Step 1 and identifies the labor-related portion of a specific payment rate for a specific service.

X is the labor-related portion of the national unadjusted payment rate.

$X = .60 * \text{(national unadjusted payment rate)}$.

Step 2. Determine the wage index area in which the hospital is located and identify the wage index level that applies to the specific hospital. We note that, under the CY 2017 OPPS policy for continuing to use the OMB labor market area delineations based on the 2010 Decennial Census data for the wage indexes used under the IPPS, a hold harmless policy for the wage index may apply, as discussed in section II.C. of this final rule with comment period. The wage index values assigned to each area reflect the geographic statistical areas (which are based upon OMB standards) to which hospitals are assigned for FY 2017 under the IPPS, reclassifications through the MGCRB, section 1886(d)(8)(B) ''Lugar'' hospitals, reclassifications under section 1886(d)(8)(E) of the Act, as defined in § 412.103 of the regulations, and hospitals designated as urban under section 601(g) of Public Law 98–21. For further discussion of the changes to the FY 2017 IPPS wage indexes, as applied to the CY 2017 OPPS, we refer readers to section II.C. of this final rule with comment period. As we proposed, we are continuing to apply a wage index floor of 1.00 to frontier States, in accordance with section 10324 of the Affordable Care Act of 2010.

Step 3. Adjust the wage index of hospitals located in certain qualifying counties that have a relatively high percentage of hospital employees who reside in the county, but who work in a different county with a higher wage index, in accordance with section 505 of Public Law 108–173. Addendum L to this final rule with comment period (which is available via the Internet on the CMS Web site) contains the qualifying counties and the associated wage index increase developed for the FY 2017 IPPS, which are listed in Table 2 in the FY 2017 IPPS/LTCH PPS final rule and correction notice tables and available via the Internet on the CMS Web site at: *http://www.cms.gov/Medicare/Medicare-Fee-for-Service-Payment/AcuteInpatientPPS/index.html.* This step is to be followed only if the hospital is not reclassified or redesignated under section 1886(d)(8) or section 1886(d)(10) of the Act.

Step 4. Multiply the applicable wage index determined under Steps 2 and 3 by the amount determined under Step 1 that represents the labor-related portion of the national unadjusted payment rate.

The formula below is a mathematical representation of Step 4 and adjusts the labor-related portion of the national unadjusted payment rate for the specific service by the wage index.

X_a is the labor-related portion of the national unadjusted payment rate (wage adjusted).

X_a = .60 * (national unadjusted payment rate) * applicable wage index.

Step 5. Calculate 40 percent (the nonlabor-related portion) of the national unadjusted payment rate and add that amount to the resulting product of Step 4. The result is the wage index adjusted payment rate for the relevant wage index area.

The formula below is a mathematical representation of Step 5 and calculates the remaining portion of the national payment rate, the amount not attributable to labor, and the adjusted payment for the specific service.

Y is the nonlabor-related portion of the national unadjusted payment rate.

Y = .40 * (national unadjusted payment rate).
Adjusted Medicare Payment = $Y + X_a$.

Step 6. If a provider is an SCH, as set forth in the regulations at § 412.92, or an EACH, which is considered to be an SCH under section 1886(d)(5)(D)(iii)(III) of the Act, and located in a rural area, as defined in § 412.64(b), or is treated as being located in a rural area under § 412.103, multiply the wage index adjusted payment rate by 1.071 to calculate the total payment.

The formula below is a mathematical representation of Step 6 and applies the rural adjustment for rural SCHs.

Adjusted Medicare Payment (SCH or EACH) = Adjusted Medicare Payment * 1.071.

We are providing examples below of the calculation of both the full and reduced national unadjusted payment rates that will apply to certain outpatient items and services performed by hospitals that meet and that fail to meet the Hospital OQR Program requirements, using the steps outlined above. For purposes of this example, we used a provider that is located in Brooklyn, New York that is assigned to CBSA 35614. This provider bills one service that is assigned to APC 5071 (Level 1 Excision/Biopsy/Incision and Drainage). The CY 2017 full national unadjusted payment rate for APC 5071 is approximately $538.88. The reduced national unadjusted payment rate for APC 5071 for a hospital that fails to meet the Hospital OQR Program requirements is approximately $528.10. This reduced rate is calculated by multiplying the reporting ratio of 0.980 by the full unadjusted payment rate for APC 5071.

The FY 2017 wage index for a provider located in CBSA 35614 in New York is 1.2936. The labor-related portion of the full national unadjusted payment is approximately $418.26 (.60 * $538.88 * 1.2936). The labor-related portion of the reduced national unadjusted payment is approximately $409.89 (.60 * $528.10 * 1.2936). The nonlabor-related portion of the full national unadjusted payment is approximately $215.55 (.40 * $538.88). The nonlabor-related portion of the reduced national unadjusted payment is approximately $211.24 (.40 * $528.10). The sum of the labor-related and nonlabor-related portions of the full national adjusted payment is approximately $633.81 ($418.26 + $215.55). The sum of the portions of the reduced national adjusted payment is approximately $621.13 ($409.89 + $211.24).

I. Beneficiary Copayments

1. Background

Section 1833(t)(3)(B) of the Act requires the Secretary to set rules for determining the unadjusted copayment amounts to be paid by beneficiaries for covered OPD services. Section 1833(t)(8)(C)(ii) of the Act specifies that the Secretary must reduce the national unadjusted copayment amount for a covered OPD service (or group of such services) furnished in a year in a manner so that the effective copayment rate (determined on a national unadjusted basis) for that service in the year does not exceed a specified percentage. As specified in section 1833(t)(8)(C)(ii)(V) of the Act, the effective copayment rate for a covered OPD service paid under the OPPS in CY 2006, and in calendar years thereafter, shall not exceed 40 percent of the APC payment rate. Section 1833(t)(3)(B)(ii) of the Act provides that, for a covered OPD service (or group of such services) furnished in a year, the national unadjusted copayment amount cannot be less than 20 percent of the OPD fee schedule amount. However, section 1833(t)(8)(C)(i) of the Act limits the amount of beneficiary copayment that may be collected for a procedure performed in a year to the amount of the inpatient hospital deductible for that year.

Section 4104 of the Affordable Care Act eliminated the Medicare Part B coinsurance for preventive services furnished on and after January 1, 2011, that meet certain requirements, including flexible sigmoidoscopies and screening colonoscopies, and waived the Part B deductible for screening colonoscopies that become diagnostic during the procedure. Our discussion of the changes made by the Affordable Care Act with regard to copayments for preventive services furnished on and after January 1, 2011, may be found in section XII.B. of the CY 2011 OPPS/ASC final rule with comment period (75 FR 72013).

2. OPPS Copayment Policy

In the CY 2017 OPPS/ASC proposed rule (81 FR 45640), for CY 2017, we proposed to determine copayment amounts for new and revised APCs using the same methodology that we implemented beginning in CY 2004. (We refer readers to the November 7, 2003 OPPS final rule with comment period (68 FR 63458).) In addition, we proposed to use the same standard rounding principles that we have historically used in instances where the application of our standard copayment methodology would result in a copayment amount that is less than 20 percent and cannot be rounded, under standard rounding principles, to 20 percent. (We refer readers to the CY 2008 OPPS/ASC final rule with comment period (72 FR 66687) in which we discuss our rationale for applying these rounding principles.) We included the proposed national unadjusted copayment amounts for services payable under the OPPS that would be effective January 1, 2017, in Addenda A and B to the proposed rule (which are available via the Internet on the CMS Web site).

As discussed in section XIII.E. of the proposed and this final rule with comment period, for CY 2017, the Medicare beneficiary's minimum unadjusted copayment and national unadjusted copayment for a service to which a reduced national unadjusted payment rate applies will equal the product of the reporting ratio and the national unadjusted copayment, or the product of the reporting ratio and the minimum unadjusted copayment, respectively, for the service.

We note that OPPS copayments may increase or decrease each year based on changes in the calculated APC payment rates due to updated cost report and claims data, and any changes to the OPPS cost modeling process. However, as described in the CY 2004 OPPS final rule with comment period, the development of the copayment methodology generally moves beneficiary copayments closer to 20 percent of OPPS APC payments (68 FR 63458 through 63459).

In the CY 2004 OPPS final rule with comment period (68 FR 63459), we adopted a new methodology to calculate unadjusted copayment amounts in situations including reorganizing APCs, and we finalized the following rules to determine copayment amounts in CY 2004 and subsequent years.

• When an APC group consists solely of HCPCS codes that were not paid under the OPPS the prior year because they were packaged or excluded or are new codes, the unadjusted copayment amount would be 20 percent of the APC payment rate.

• If a new APC that did not exist during the prior year is created and consists of HCPCS codes previously assigned to other APCs, the copayment amount is calculated as the product of the APC payment rate and the lowest coinsurance percentage of the codes comprising the new APC.

• If no codes are added to or removed from an APC and, after recalibration of its relative payment weight, the new payment rate is equal to or *greater than* the prior year's rate, the copayment amount remains constant (unless the resulting coinsurance percentage is less than 20 percent).

• If no codes are added to or removed from an APC and, after recalibration of its relative payment weight, the new payment rate is *less than* the prior year's rate, the copayment amount is calculated as the product of the new payment rate and the prior year's coinsurance percentage.

• If HCPCS codes are added to or deleted from an APC and, after recalibrating its relative payment weight, holding its unadjusted copayment amount constant results in a decrease in the coinsurance percentage for the reconfigured APC, the copayment amount would not change (unless retaining the copayment amount would result in a coinsurance rate less than 20 percent).

• If HCPCS codes are added to an APC and, after recalibrating its relative payment weight, holding its unadjusted copayment amount constant results in an increase in the coinsurance percentage for the reconfigured APC, the copayment amount would be calculated as the product of the payment rate of the reconfigured APC and the lowest coinsurance percentage of the codes being added to the reconfigured APC.

We noted in the CY 2004 OPPS final rule with comment period that we would seek to lower the copayment percentage for a service in an APC from the prior year if the copayment percentage was greater than 20 percent. We noted that this principle was consistent with section 1833(t)(8)(C)(ii) of the Act, which accelerates the reduction in the national unadjusted coinsurance rate so that beneficiary liability will eventually equal 20 percent of the OPPS payment rate for all OPPS services to which a copayment applies, and with section 1833(t)(3)(B) of the Act, which is consistent with the Congressional goal of achieving a 20-percent copayment percentage when fully phased in and gives the Secretary the authority to set rules for determining copayment amounts for new services. We further noted that the use of this methodology would, in general, reduce the beneficiary coinsurance rate and copayment amount for APCs for which the payment rate changes as the result of the reconfiguration of APCs and/or recalibration of relative payment weights (68 FR 63459).

We did not receive any public comments on the copayment policy proposal. For the reasons set forth in this final rule with comment period, we are finalizing our proposed CY 2017 copayment policy without modification.

3. Calculation of an Adjusted Copayment Amount for an APC Group

Individuals interested in calculating the national copayment liability for a Medicare beneficiary for a given service provided by a hospital that met or failed to meet its Hospital OQR Program requirements should follow the formulas presented in the following steps.

Step 1. Calculate the beneficiary payment percentage for the APC by dividing the APC's national unadjusted copayment by its payment rate. For example, using APC 5071, $107.78 is approximately 20 percent of the full national unadjusted payment rate of $538.88. For APCs with only a minimum unadjusted copayment in Addenda A and B to this final rule with comment period (which are available via the Internet on the CMS Web site), the beneficiary payment percentage is 20 percent.

The formula below is a mathematical representation of Step 1 and calculates the national copayment as a percentage of national payment for a given service.

B is the beneficiary payment percentage.

B = National unadjusted copayment for APC/ national unadjusted payment rate for APC.

Step 2. Calculate the appropriate wage-adjusted payment rate for the APC for the provider in question, as indicated in Steps 2 through 4 under section II.H. of this final rule with comment period. Calculate the rural adjustment for eligible providers as indicated in Step 6 under section II.H. of this final rule with comment period.

Step 3. Multiply the percentage calculated in Step 1 by the payment rate calculated in Step 2. The result is the wage-adjusted copayment amount for the APC. The formula below is a mathematical representation of Step 3 and applies the beneficiary payment percentage to the adjusted payment rate for a service calculated under section II.H. of this final rule with comment period, with and without the rural adjustment, to calculate the adjusted beneficiary copayment for a given service.

Wage-adjusted copayment amount for the APC = Adjusted Medicare Payment * *B.*

Wage-adjusted copayment amount for the APC (SCH or EACH) = (Adjusted Medicare Payment * 1.071) * *B.*

Step 4. For a hospital that failed to meet its Hospital OQR Program requirements, multiply the copayment calculated in Step 3 by the reporting ratio of 0.980.

The unadjusted copayments for services payable under the OPPS that will be effective January 1, 2017, are shown in Addenda A and B to this final rule with comment period (which are available via the Internet on the CMS Web site). We note that the national unadjusted payment rates and copayment rates shown in Addenda A and B to this final rule with comment period reflect the CY 2017 OPD fee schedule increase factor discussed in section II.B. of this final rule with comment period.

In addition, as noted above, section 1833(t)(8)(C)(i) of the Act limits the amount of beneficiary copayment that may be collected for a procedure performed in a year to the amount of the inpatient hospital deductible for that year.

III. OPPS Ambulatory Payment Classification (APC) Group Policies

A. OPPS Treatment of New CPT and Level II HCPCS Codes

CPT and Level II HCPCS codes are used to report procedures, services, items, and supplies under the hospital OPPS. Specifically, CMS recognizes the following codes on OPPS claims:

• Category I CPT codes, which describe surgical procedures and medical services;

• Category III CPT codes, which describe new and emerging technologies, services, and procedures; and

• Level II HCPCS codes, which are used primarily to identify products, supplies, temporary procedures, and services not described by CPT codes.

CPT codes are established by the American Medical Association (AMA) and the Level II HCPCS codes are established by the CMS HCPCS Workgroup. These codes are updated and changed throughout the year. CPT and HCPCS code changes that affect the OPPS are published both through the annual rulemaking cycle and through

the OPPS quarterly update Change Requests (CRs). CMS releases new Level II HCPCS codes to the public or recognizes the release of new CPT codes by the AMA and makes these codes effective (that is, the codes can be reported on Medicare claims) outside of the formal rulemaking process via OPPS quarterly update CRs. Based on our review, we assign the new CPT and Level II HCPCS codes to interim status indicator (SI) and APC assignments. These interim assignments are finalized in the OPPS/ASC final rules. This quarterly process offers hospitals access to codes that may more accurately describe items or services furnished and provides payment or more accurate payment for these items or services in a timelier manner than if we waited for the annual rulemaking process. We solicit public comments on these new codes and finalize our proposals related to these codes through our annual rulemaking process.

We note that, under the OPPS, the APC assignment determines the payment rate for an item, procedure, or service. For those items, procedures, or services not paid separately under the hospital OPPS, they are assigned to appropriate status indicators. Section XI. of this final rule with comment period provides a discussion of the various status indicators used under the OPPS. Certain payment status indicators provide separate payment while other payment status indicators do not.

In Table 6 below, we summarize our current process for updating codes through our OPPS quarterly update CRs, seeking public comments, and finalizing the treatment of these new codes under the OPPS.

TABLE 6—COMMENT TIMEFRAME FOR NEW OR REVISED HCPCS CODES

OPPS quarterly update CR	Type of code	Effective date	Comments sought	When finalized
April I, 2016	Level II HCPCS Codes	April 1, 2016	CY 2017 OPPS/ASC proposed rule.	CY 2017 OPPS/ASC final rule with comment period.
July 1, 2016	Level II HCPCS Codes	July 1, 2016	CY 2017 OPPS/ASC proposed rule.	CY 2017 OPPS/ASC final rule with comment period.
	Category I (certain vaccine codes) and III CPT codes.	July 1, 2016	CY 2017 OPPS/ASC proposed rule.	CY 2017 OPPS/ASC final rule with comment period.
October 1, 2016	Level II HCPCS Codes	October 1, 2016	CY 2017 OPPS/ASC final rule with comment period.	CY 2018 OPPS/ASC final rule with comment period.
January 1, 2017	Level II HCPCS Codes	January 1, 2017	CY 2017 OPPS/ASC final rule with comment period.	CY 2018 OPPS/ASC final rule with comment period.
	Category I and III CPT Codes	January 1, 2017	CY 2017 OPPS/ASC proposed rule.	CY 2017 OPPS/ASC final rule with comment period.

1. Treatment of New Level II HCPCS Codes Effective April 1, 2016 for Which We Solicited Public Comments in the CY 2017 OPPS/ASC Proposed Rule

Through the April 2016 OPPS quarterly update CR (Transmittal 3471, Change Request 9549, dated February 26, 2016) we recognized several new Level II HCPCS codes for separate payment under the OPPS. Effective April 1, 2016, we implemented 10 new HCPCS codes and also assigned them to appropriate interim OPPS status indicators and APCs. Specifically, as displayed in Table 7 of the CY 2017 OPPS/ASC proposed rule (81 FR 45642), we provided separate payment for HCPCS codes C9137, C9138, C9461, C9470, C9471, C9472, C9473, C9474, C9475, and J7503. We note that HCPCS code J7503 was initially assigned to OPPS status indicator ''E'' (Not paid by Medicare when submitted on outpatient claims (any outpatient bill type) when the code was established on January 1, 2016. However, we revised its OPPS status indicator from ''E'' to ''G'' (Pass-Through Drugs and Biologicals. Paid under OPPS; separate APC payment) effective April 1, 2016, when the drug associated with HCPCS code J7503 was approved for pass-through payment status under the hospital OPPS.

In the CY 2017 OPPS/ASC proposed rule, we solicited public comments on the proposed APC and status indicator assignments for the 10 HCPCS codes implemented on April 1, 2016. We indicated that the proposed payment rates for these codes, where applicable, could be found in Addendum B to the proposed rule (which is available via the Internet on the CMS Web site).

We did not receive any public comments on the proposed APC and status indicator assignments for the HCPCS codes implemented in April 2016. Therefore, we are finalizing the proposed APC assignments and status indicators for the new HCPCS codes that were implemented on April 1, 2016. The final APC and status indicator assignments are listed in Table 7 below.

We note that, for the CY 2017 update, the HCPCS Workgroup replaced the temporary drug HCPCS C-codes that were listed in Table 7 of the proposed rule with permanent HCPCS J-codes effective January 1, 2017. Because the replacement HCPCS J-codes describe the same drugs with the same dosage descriptors as their predecessor HCPCS C-codes, they will continue to receive pass-through payment status in CY 2017. Therefore, we are assigning the replacement HCPCS J-codes to the same APCs and status indicators as their predecessor HCPCS C-codes, as shown in Table 7 below. The final payment rates for these codes, where applicable, can be found in Addendum B to this final rule with comment period (which is available via the Internet on the CMS Web site).

TABLE 7—FINAL CY 2017 STATUS INDICATOR (SI) AND APC ASSIGNMENTS FOR THE NEW LEVEL II HCPCS CODES THAT WERE IMPLEMENTED ON APRIL 1, 2016

CY 2016 HCPCS code	CY 2017 HCPCS code	CY 2017 long descriptor	Final CY 2017 SI	Final CY 2017 APC
C9137	J7207	Injection, factor viii, (antihemophilic factor, recombinant), PEGylated, 1 i.u.	G	1844
C9138	J7209	Injection, factor viii, (antihemophilic factor, recombinant), (Nuwiq), 1 i.u.	G	1846
C9461	A9515	Choline c-11, diagnostic, per study dose up to 20 millicuries	G	9461

TABLE 7—FINAL CY 2017 STATUS INDICATOR (SI) AND APC ASSIGNMENTS FOR THE NEW LEVEL II HCPCS CODES THAT WERE IMPLEMENTED ON APRIL 1, 2016—Continued

CY 2016 HCPCS code	CY 2017 HCPCS code	CY 2017 long descriptor	Final CY 2017 SI	Final CY 2017 APC
C9470	J1942	Injection, aripiprazole lauroxil, 1 mg	G	9470
C9471	J7322	Hyaluronan or derivative, Hymovis, for intra-articular injection, 1 mg	G	9471
C9472	J9325	Injection, talimogene laherparepvec, per 1 million plaque forming units	G	9472
C9473	J2182	Injection, mepolizumab, 1 mg	G	9473
C9474	J9205	Injection, irinotecan liposome, 1 mg	G	9474
C9475	J9295	Injection, necitumumab, 1 mg	G	9475
J7503	J7503	Tacrolimus, extended release, (Envarsus XR), oral, 0.25 mg	G	1845

2. Treatment of New CPT and Level II HCPCS Codes Effective July 1, 2016 for Which We Solicited Public Comments in the CY 2017 OPPS/ASC Proposed Rule

Effective July 1, 2016, we implemented several new CPT and Level II HCPCS codes under the hospital OPPS. Through the July 2016 OPPS quarterly update CR (Transmittal 3523, Change Request 9658, dated May 13, 2016), we assigned nine new Category III CPT codes and nine Level II HCPCS codes that were made effective July 1, 2016, to interim OPPS status indicators and APCs. Specifically, as displayed in Table 8 of the CY 2017 OPPS/ASC proposed rule (81 FR 45643), we established interim OPPS status indicator and APC assignments for Category III CPT codes 0438T, 0440T, 0441T, 0442T, and 0443T, and Level II HCPCS codes C9476, C9477, C9478, C9479, C9480, Q5102, Q9981, Q9982, and Q9983. We noted that Category III CPT codes 0437T, 0439T, 0444T, and 0445T are assigned to OPPS status indicator ''N'' to indicate that the services described by the codes are packaged and their payment is included in the primary procedure codes reported with these codes.

Table 8 of the CY 2017 OPPS/ASC proposed rule listed the CPT and Level II HCPCS codes that were implemented on July 1, 2016, along with the proposed status indicators and proposed APC assignments, where applicable, for CY 2017. We solicited public comments on the proposed APC and status indicator assignments.

We received one comment related to the proposed APC assignment for Category III CPT codes 0440T, 0441T, and 0442T, which we address in section III.D.10. of this final rule with comment period. We did not receive any public comments on the proposed APC and status indicator assignments for the other 15 codes that were listed in Table 8 of the CY 2017 OPPS/ASC proposed rule. Therefore, in this final rule with comment period, we are adopting as final, without modification, the proposed APC and/or status indicator assignments for Category III CPT codes 0437T, 0438T, 0439T, 0444T, and 0445T and Level II HCPCS codes C9476, C9477, C9478, C9479, C9480, Q5102, Q9981, Q9982, and Q9983. However, we are modifying the OPPS status indicator for CPT code 0443T from ''T'' to ''N'' because this is an add-on code. Since January 1, 2014, payment for procedures described by add-on codes have been packaged under the hospital OPPS.

In addition, for the CY 2017 update, the HCPCS Workgroup replaced temporary HCPCS codes C9476, C9477, C9478, C9480, and Q9981 with permanent HCPCS J-codes effective January 1, 2017. Because the replacement HCPCS J-codes describe the same drugs with the same dosage descriptors as their predecessor HCPCS C-codes and Q-codes, they will continue to receive pass-through payment status in CY 2017. Consequently, we are assigning the replacement HCPCS J-codes to the same APCs and status indicators as their predecessor HCPCS C-codes and Q-codes, as shown in Table 8 below. Table 8 lists the CPT and Level II HCPCS codes that were implemented on July 1, 2016, along with the final status indicators and APC assignments for CY 2017. The final payment rates for these codes, where applicable, can be found in Addendum B to this final rule with comment period (which is available via the Internet on the CMS Web site).

TABLE 8—FINAL CY 2017 STATUS INDICATORS (SI) AND APC ASSIGNMENTS FOR THE NEW CATEGORY III CPT AND LEVEL II HCPCS CODES IMPLEMENTED ON JULY 1, 2016

CY 2016 CPT/HCPCS code	CY 2017 CPT/HCPCS code	CY 2017 long descriptor	Final CY 2017 SI	Final CY 2017 APC
C9476	J9145	Injection, daratumumab, 10 mg	G	9476
C9477	J9176	Injection, elotuzumab, 1 mg	G	9477
C9478	J2840	Injection, sebelipase alfa, 1 mg	G	9478
C9479	J7342	Instillation, ciprofloxacin otic suspension, 6 mg	G	9479
C9480	J9352	Injection, trabectedin, 0.1 mg	G	9480
Q5102	Q5102	Injection, Infliximab, Biosimilar, 10 mg	E2	N/A
Q9981	J8670	Rolapitant, oral, 1 mg	K	1761
Q9982 *	Q9982	Flutemetamol F18, diagnostic, per study dose, up to 5 millicuries	G	9459
Q9983 **	Q9983	Florbetaben f18, diagnostic, per study dose, up to 8.1 millicuries	G	9458
0437T	0437T	Implantation of non-biologic or synthetic implant (*e.g.,* polypropylene) for fascial reinforcement of the abdominal wall (List separately in addition to primary procedure).	N	N/A
0438T	0438T ***	Transperineal placement of biodegradable material, peri-prostatic (via needle), single or multiple, includes image guidance.	T	5374
0439T	0439T	Myocardial contrast perfusion echocardiography; at rest or with stress, for assessment of myocardial ischemia or viability (List separately in addition to primary procedure).	N	N/A

TABLE 8—FINAL CY 2017 STATUS INDICATORS (SI) AND APC ASSIGNMENTS FOR THE NEW CATEGORY III CPT AND LEVEL II HCPCS CODES IMPLEMENTED ON JULY 1, 2016—Continued

CY 2016 CPT/HCPCS code	CY 2017 CPT/HCPCS code	CY 2017 long descriptor	Final CY 2017 SI	Final CY 2017 APC
0440T	0440T	Ablation, percutaneous, cryoablation, includes imaging guidance; upper extremity distal/peripheral nerve.	J1	5432
0441T	0441T	Ablation, percutaneous, cryoablation, includes imaging guidance; lower extremity distal/peripheral nerve.	J1	5432
0442T	0442T	Ablation, percutaneous, cryoablation, includes imaging guidance; nerve plexus or other truncal nerve (*e.g.,* brachial plexus, pudendal nerve).	J1	5432
0443T	0443T	Real time spectral analysis of prostate tissue by fluorescence spectroscopy	N	N/A
0444T	0444T	Initial placement of a drug-eluting ocular insert under one or more eyelids, including fitting, training, and insertion, unilateral or bilateral.	N	N/A
0445T	0445T	Subsequent placement of a drug-eluting ocular insert under one or more eyelids, including re-training, and removal of existing insert, unilateral or bilateral.	N	N/A

*HCPCS code C9459 (Flutemetamol f18, diagnostic, per study dose, up to 5 millicuries) was deleted June 30, 2016, and replaced with HCPCS code Q9982 effective July 1, 2016.

**HCPCS code C9458 (Florbetaben f18, diagnostic, per study dose, up to 8.1 millicuries) was deleted June 30, 2016, and replaced with HCPCS code Q9983 effective July 1, 2016.

***HCPCS code C9743 (Injection/implantation of bulking or spacer material (any type) with or without image guidance (not to be used if a more specific code applies) was deleted June 30, 2016 and replaced with CPT code 0438T effective July 1, 2016.

3. Process for New Level II HCPCS Codes That Became Effective October 1, 2016 and New Level II HCPCS Codes That Will Be Effective January 1, 2017 for Which We Are Soliciting Public Comments in This CY 2017 OPPS/ASC Final Rule With Comment Period

As has been our practice in the past, we incorporate those new Level II HCPCS codes that are effective October 1 and January 1 in the final rule with comment period thereby updating the OPPS for the following calendar year. These codes are released to the public through the October and January OPPS quarterly update CRs and via the CMS HCPCS Web site (for Level II HCPCS codes). For CY 2017, we proposed to continue our established policy of assigning comment indicator ''NI'' to these codes to indicate that we are assigning them an interim payment status which is subject to public comment (81 FR 45643). Specifically, the status indicators and the APC assignments for codes flagged with comment indicator ''NI'' are open to public comment in this final rule with comment period, and we will respond to these public comments in the OPPS/ASC final rule with comment period for the next year's OPPS/ASC update. For CY 2017, we proposed to include in Addendum B to the CY 2017 OPPS/ASC final rule with comment period the following new HCPCS codes:

- New Level II HCPCS codes effective October 1, 2016, that would be incorporated in the October 2016 OPPS quarterly update CR;
- New Level II HCPCS codes effective January 1, 2017, that would be incorporated in the January 2017 OPPS quarterly update CR.

As stated above, the October 1, 2016 and January 1, 2017 codes are flagged with comment indicator ''NI'' in Addendum B to this CY 2017 OPPS/ASC final rule with comment period to indicate that we have assigned the codes an interim OPPS payment status for CY 2017. We are inviting public comments on the interim status indicator and APC assignments and payment rates for these codes, if applicable, that will be finalized in the CY 2018 OPPS/ASC final rule with comment period.

4. Treatment of New and Revised CY 2017 Category I and III CPT Codes That Will Be Effective January 1, 2017, for Which We Solicited Public Comments in the CY 2017 OPPS/ASC Proposed Rule

In the CY 2015 OPPS/ASC final rule with comment period (79 FR 66841 through 66844), we finalized a revised process of assigning APC and status indicators for new and revised Category I and III CPT codes that would be effective January 1. Specifically, for the new/revised CPT codes that we receive in a timely manner from the AMA's CPT Editorial Panel, we finalized our proposal to include the codes that would be effective January 1 in the OPPS/ASC proposed rules, along with proposed APC and status indicator assignments for them, and to finalize the APC and status indicator assignments in the OPPS/ASC final rules beginning with the CY 2016 OPPS update. For those new/revised CPT codes that were received too late for inclusion in the OPPS/ASC proposed rule, we finalized our proposal to establish and use HCPCS G-codes that mirror the predecessor CPT codes and retain the current APC and status indicator assignments for a year until we can propose APC and status indicator assignments in the following year's rulemaking cycle. We noted that even if we find that we need to create HCPCS G-codes in place of certain CPT codes for the MPFS proposed rule, we do not anticipate that these HCPCS G codes will always be necessary for OPPS purposes. We will make every effort to include proposed APC and status indicator assignments for all new and revised CPT codes that the AMA makes publicly available in time for us to include them in the proposed rule, and to avoid establishing HCPCS G codes and the resulting delay in utilization of the most current CPT codes. In addition, we finalized our proposal to make interim APC and status indicator assignments for CPT codes that are not available in time for the proposed rule and that describe wholly new services (such as new technologies or new surgical procedures), solicit public comments, and finalize the specific APC and status indicator assignments for those codes in the following year's final rule.

For the CY 2017 OPPS update, we received the CY 2017 CPT codes that will be effective January 1, 2017, from the AMA in time for inclusion in the CY 2017 OPPS/ASC proposed rule. In the proposed rule (81 FR 45643 through 45644), we indicated that the new and revised CY 2017 Category I and III CPT codes could be found in OPPS Addendum B to the proposed rule and were assigned to new comment indicator ''NP'' to indicate that the code

is new for the next calendar year or the code is an existing code with substantial revision to its code descriptor in the next calendar year as compared to current calendar year with a proposed APC assignment. We further stated that comments would be accepted on the proposed APC assignment and status indicator.

In addition, we reminded readers that the CPT code descriptors that appeared in OPPS Addendum B are short descriptors and do not accurately describe the complete procedure, service, or item described of the CPT code. Therefore, we included the 5-digit placeholder codes and their long descriptors in Addendum O to the proposed rule (which is available via the Internet on the CMS Web site) so that the public could adequately comment on our proposed APCs and status indicator assignments. The 5-digit placeholder codes were listed in Addendum O of the proposed rule, specifically under the column labeled ''CY 2017 OPPS/ASC Proposed Rule 5-Digit Placeholder Code.'' We also indicated that the final CPT code numbers would be included in this CY 2017 OPPS/ASC final rule with comment period. The final CPT code numbers, along with their corresponding 5-digit placeholder codes, can be found in Addendum O of this final rule with comment period.

We note that not every code listed in Addendum O of the proposed rule was subject to comment. For the new/revised Category I and III CPT codes, we requested public comments on only those codes that were assigned to comment indicator ''NP.'' We indicated that public comments would not be accepted for new Category I CPT laboratory codes that were not assigned to ''NP'' comment indicator in Addendum O to the proposed rule. We stated that comments to these codes must be submitted at the Clinical Laboratory Fee Schedule (CLFS) Public Meeting, which was scheduled for July 18, 2016.

We received public comments on several of the new CPT codes that were assigned to comment indicator ''NP'' in Addendum B of the CY 2017 OPPS/ASC proposed rule. We respond to these comments in section III.D. of this CY 2017 OPPS/ASC final rule with comment period.

The final status indicators, APC assignments, and payment rates for the new CPT codes that will be effective January 1, 2017, can be found in Addendum B to this final rule with comment period (which is available via the Internet on the CMS Web site).

B. OPPS Changes—Variations Within APCs

1. Background

Section 1833(t)(2)(A) of the Act requires the Secretary to develop a classification system for covered hospital outpatient department services. Section 1833(t)(2)(B) of the Act provides that the Secretary may establish groups of covered OPD services within this classification system, so that services classified within each group are comparable clinically and with respect to the use of resources. In accordance with these provisions, we developed a grouping classification system, referred to as Ambulatory Payment Classifications (APCs), as set forth in § 419.31 of the regulations. We use Level I and Level II HCPCS codes to identify and group the services within each APC. The APCs are organized such that each group is homogeneous both clinically and in terms of resource use. Using this classification system, we have established distinct groups of similar services. We also have developed separate APC groups for certain medical devices, drugs, biologicals, therapeutic radiopharmaceuticals, and brachytherapy devices that are not packaged into the payment for the procedure.

We have packaged into the payment for each procedure or service within an APC group the costs associated with those items and services that are typically ancillary and supportive to a primary diagnostic or therapeutic modality and, in those cases, are an integral part of the primary service they support. Therefore, we do not make separate payment for these packaged items or services. In general, packaged items and services include, but are not limited to, the items and services listed in § 419.2(b) of the regulations. A further discussion of packaged services is included in section II.A.3. of this final rule with comment period.

Under the OPPS, we generally pay for covered hospital outpatient services on a rate-per-service basis, where the service may be reported with one or more HCPCS codes. Payment varies according to the APC group to which the independent service or combination of services is assigned. In the CY 2017 OPPS/ASC proposed rule (81 FR 45644), for CY 2017, we proposed that each APC relative payment weight represents the hospital cost of the services included in that APC, relative to the hospital cost of the services included in APC 5012 (Clinic Visits and Related Services). The APC relative payment weights are scaled to APC 5012 because it is the hospital clinic visit APC and clinic visits are among the most frequently furnished services in the hospital outpatient setting.

2. Application of the 2 Times Rule

Section 1833(t)(9)(A) of the Act requires the Secretary to review, not less often than annually, and revise the APC groups, the relative payment weights, and the wage and other adjustments described in paragraph (2) to take into account changes in medical practice, changes in technology, the addition of new services, new cost data, and other relevant information and factors. Section 1833(t)(9)(A) of the Act also requires the Secretary to consult with an expert outside advisory panel composed of an appropriate selection of representatives of providers to review (and advise the Secretary concerning) the clinical integrity of the APC groups and the relative payment weights. We note that the Panel recommendations for specific services for the CY 2017 OPPS and our responses to them are discussed in the relevant specific sections throughout this final rule with comment period.

In addition, section 1833(t)(2) of the Act provides that, subject to certain exceptions, the items and services within an APC group cannot be considered comparable with respect to the use of resources if the highest cost for an item or service in the group is more than 2 times greater than the lowest cost for an item or service within the same group (referred to as the ''2 times rule''). The statute authorizes the Secretary to make exceptions to the 2 times rule in unusual cases, such as low-volume items and services (but the Secretary may not make such an exception in the case of a drug or biological that has been designated as an orphan drug under section 526 of the Federal Food, Drug, and Cosmetic Act).

Therefore, in accordance with section 1833(t)(2) of the Act and § 419.31 of the regulations, we annually review the items and services within an APC group to determine if there are any APC violations of the 2 times rule and whether there are any appropriate revisions to APC assignments that may be necessary or exceptions to be made. In determining the APCs with a 2 times rule violation, we consider only those HCPCS codes that are significant based on the number of claims. We note that, for purposes of identifying significant procedure codes for examination under the 2 times rule, we consider procedure codes that have more than 1,000 single major claims or procedure codes that have both greater than 99 single major claims and contribute at least 2 percent

of the single major claims used to establish the APC cost to be significant (75 FR 71832). This longstanding definition of when a procedure code is significant for purposes of the 2 times rule was selected because we believe that a subset of 1,000 claims (or less than 1,000 claims) is negligible within the set of approximately 100 million single procedure or single session claims we use for establishing costs. Similarly, a procedure code for which there are fewer than 99 single claims and which comprises less than 2 percent of the single major claims within an APC will have a negligible impact on the APC cost. In the CY 2017 OPPS/ASC proposed rule (81 FR 45644 through 45645), we proposed to make exceptions to this limit on the variation of costs within each APC group in unusual cases, such as low-volume items and services.

For the CY 2017 OPPS update, we identified the APCs with violations of the 2 times rule, and we proposed changes to the procedure codes assigned to these APCs in Addendum B to the CY 2017 OPPS/ASC proposed rule. We noted that Addendum B did not appear in the printed version of the **Federal Register** as part of the CY 2017 OPPS/ASC proposed rule. Rather, it was published and made available via the Internet on the CMS Web site at: *http://www.cms.gov/Medicare/Medicare-Fee-for-Service-Payment/HospitalOutpatientPPS/index.html*. In these cases, to eliminate a violation of the 2 times rule or to improve clinical and resource homogeneity, in the CY 2017 OPPS/ASC proposed rule (81 FR 45645), we proposed to reassign these procedure codes to new APCs that contain services that are similar with regard to both their clinical and resource characteristics. In many cases, the proposed procedure code reassignments and associated APC reconfigurations for CY 2017 included in the proposed rule are related to changes in costs of services that were observed in the CY 2015 claims data newly available for CY 2017 ratesetting. We also proposed changes to the status indicators for some procedure codes that were not specifically and separately discussed in the proposed rule. In these cases, we proposed to change the status indicators for these procedure codes because we believe that another status indicator would more accurately describe their payment status from an OPPS perspective based on the policies that we proposed for CY 2017. Addendum B to the CY 2017 OPPS/ASC proposed rule identified with a comment indicator ''CH'' those procedure codes for which we proposed a change to the APC assignment or status indicator, or both, that were initially assigned in the April 1, 2016 OPPS Addendum B Update (available via the Internet on the CMS Web site at: *https://www.cms.gov/Medicare/Medicare-Fee-for-Service-Payment/HospitalOutpatientPPS/Addendum-A-and-Addendum-B-Updates.html*). In contrast, Addendum B to this final rule with comment period (available via the Internet on the CMS Web site) identifies with the ''CH'' comment indicator the final CY 2017 changes compared to the HCPCS codes' status as reflected in the October 2016 Addendum B update.

3. APC Exceptions to the 2 Times Rule

Taking into account the APC changes that we proposed for CY 2017, we reviewed all of the APCs to determine which APCs would not meet the requirements of the 2 times rule. We used the following criteria to evaluate whether to propose exceptions to the 2 times rule for affected APCs:

- Resource homogeneity;
- Clinical homogeneity;
- Hospital outpatient setting utilization;
- Frequency of service (volume); and
- Opportunity for upcoding and code fragments.

Based on the CY 2015 claims data available for the CY 2017 proposed rule, we found 4 APCs with violations of the 2 times rule. We applied the criteria as described above to identify the APCs that we proposed to make exceptions for under the 2 times rule for CY 2017, and identified 4 APCs that met the criteria for an exception to the 2 times rule based on the CY 2015 claims data available for the proposed rule. For a detailed discussion of these criteria, we refer readers to the April 7, 2000 OPPS final rule with comment period (65 FR 18457 and 18458).

In addition, in the proposed rule, we noted that, for cases in which a recommendation by the Panel appears to result in or allow a violation of the 2 times rule, we may accept the Panel's recommendation because those recommendations are based on explicit consideration (that is, a review of the latest OPPS claims data and group discussion of the issue) of resource use, clinical homogeneity, site of service, and the quality of the claims data used to determine the APC payment rates.

Table 9 of the proposed rule listed the 4 APCs that we proposed to make exceptions for under the 2 times rule for CY 2017 based on the criteria cited above and claims data submitted between January 1, 2015, and December 31, 2015, and processed on or before December 31, 2015. We indicated that, for the final rule with comment period, we intend to use claims data for dates of service between January 1, 2015, and December 31, 2015, that were processed on or before June 30, 2016, and updated CCRs, if available.

Based on the updated final rule CY 2015 claims data, we found 7 APCs with violations of the 2 times rule for this final rule with comment period. We applied the criteria as described earlier to identify the APCs that are exceptions to the 2 times rule for CY 2015, and identified 4 additional APCs that meet the criteria for exception to the 2 times rule for this final rule with comment period, but that did not meet the criteria using proposed rule claims data. Specifically, we found that the following 4 additional APCs violated the 2 times rule using the final rule with comment period claims data:

- APC 5181 (Level 1 Vascular Procedures)
- APC 5732 (Level 2 Minor Procedures)
- APC 5821 (Level 1 Health and Behavior Services)
- APC 5823 (Level 3 Health and Behavior Services)

After considering the public comments we received on APC assignments and our analysis of the CY 2015 costs from hospital claims and cost report data available for this final rule with comment period, we are finalizing our proposals with some modifications. Specifically, we are finalizing our proposal to except 3 of the 4 proposed APCs from the 2 times rule for CY 2017 (APCs 5521, 5735, and 5771), and also excepting 4 additional APCs (APCs 5181, 5732, 5821, and 5823). APC 5841 (Psychotherapy), which appeared as one of the 4 APCs in Table 9 of the CY 2017 OPPS/ASC proposed rule, no longer met the criteria for exception to the 2 times rule in this final rule with comment period. Table 9 below lists the 7 APCs that we are excepting from the 2 times rule for CY 2017 based on the criteria described earlier and a review of updated claims data. We note that, for cases in which a recommendation by the HOP Panel appears to result in or allow a violation of the 2 times rule, we generally accept the Panel's recommendation because those recommendations are based on explicit consideration of resource use, clinical homogeneity, site of service, and the quality of the claims data used to determine the APC payment rates. The geometric mean costs for hospital outpatient services for these and all other APCs that were used in the development of this final rule with comment period can be found on the CMS Web site at: *http://www.cms.gov/*

Medicare/Medicare-Fee-for-Service-Payment/HospitalOutpatientPPS/Hospital-Outpatient-Regulations-and-Notices.html.

TABLE 9—FINAL CY 2017 APC EXCEPTIONS TO THE 2 TIMES RULE

CY 2017 APC	CY 2017 APC title
5181	Level 1 Vascular Procedures.
5521	Level 1 Imaging without Contrast.
5732	Level 2 Minor Procedures.
5735	Level 5 Minor Procedures.
5771	Cardiac Rehabilitation.
5821	Level 1 Health and Behavior Services.
5823	Level 3 Health and Behavior Services.

C. New Technology APCs

1. Background

In the November 30, 2001 final rule (66 FR 59903), we finalized changes to the time period a service was eligible for payment under a New Technology APC. Beginning in CY 2002, we retain services within New Technology APC groups until we gather sufficient claims data to enable us to assign the service to an appropriate clinical APC. This policy allows us to move a service from a New Technology APC in less than 2 years if sufficient data are available. It also allows us to retain a service in a New Technology APC for more than 2 years if sufficient data upon which to base a decision for reassignment have not been collected.

For CY 2016, there are 48 New Technology APC levels, ranging from the lowest cost band assigned to APC 1491 (New Technology—Level 1A ($0–$10)) through the highest cost band assigned to APC 1599 (New Technology—Level 48 ($90,001–$100,000)). In the CY 2004 OPPS final rule with comment period (68 FR 63416), we restructured the New Technology APCs to make the cost intervals more consistent across payment levels and refined the cost bands for these APCs to retain two parallel sets of New Technology APCs, one set with a status indicator of ''S'' (Significant Procedures, Not Discounted when Multiple. Paid under OPPS; separate APC payment) and the other set with a status indicator of ''T'' (Significant Procedure, Multiple Reduction Applies. Paid under OPPS; separate APC payment). These current New Technology APC configurations allow us to price new technology services more appropriately and consistently.

We note that the cost bands for the New Technology APCs, specifically, APCs 1491 through 1599, vary with increments ranging from $10 to $9,999. These cost bands identify the APCs to which new technology procedures and services with estimated service costs that fall within those cost bands are assigned under the OPPS. Payment for each APC is made at the mid-point of the APC's assigned cost band. For example, payment for New Technology APC 1507 (New Technology—Level 7 ($501–$600)) is made at $550.50.

Every year we receive several requests for higher payment amounts under the New Technology APCs for specific procedures paid under the OPPS because they require the use of expensive equipment. We are taking this opportunity to reiterate our response in general to the issue of hospitals' capital expenditures as they relate to the OPPS and Medicare, as specified in the CY 2016 OPPS/ASC final rule with comment period (80 FR 70374).

Under the OPPS, one of our goals is to make payments that are appropriate for the services that are necessary for the treatment of Medicare beneficiaries. The OPPS, like other Medicare payment systems, is budget neutral and increases are limited to the annual hospital inpatient market basket increase. We believe that our payment rates generally reflect the costs that are associated with providing care to Medicare beneficiaries, and we believe that our payment rates are adequate to ensure access to services (80 FR 70374).

For many emerging technologies, there is a transitional period during which utilization may be low, often because providers are first learning about the techniques and their clinical utility. Quite often, parties request that Medicare make higher payment amounts under the New Technology APCs for new procedures in that transitional phase. These requests, and their accompanying estimates for expected total patient utilization, often reflect very low rates of patient use of expensive equipment, resulting in high per use costs for which requesters believe Medicare should make full payment. Medicare does not, and we believe should not, assume responsibility for more than its share of the costs of procedures based on projected utilization for Medicare beneficiaries and does not set its payment rates based on initial projections of low utilization for services that require expensive capital equipment. For the OPPS, we rely on hospitals to make informed business decisions regarding the acquisition of high cost capital equipment, taking into consideration their knowledge about their entire patient base (Medicare beneficiaries included) and an understanding of Medicare's and other payers' payment policies. (We refer readers to the CY 2013 OPPS/ASC final rule with comment period (77 FR 68314) for further discussion regarding this payment policy.)

We note that, in a budget neutral environment, payments may not fully cover hospitals' costs in a particular circumstance, including those for the purchase and maintenance of capital equipment. We rely on hospitals to make their decisions regarding the acquisition of high cost equipment with the understanding that the Medicare program must be careful to establish its initial payment rates, including those made through New Technology APCs, for new services that lack hospital claims data based on realistic utilization projections for all such services delivered in cost-efficient hospital outpatient settings. As the OPPS acquires claims data regarding hospital costs associated with new procedures, we regularly examine the claims data and any available new information regarding the clinical aspects of new procedures to confirm that our OPPS payments remain appropriate for procedures as they transition into mainstream medical practice (77 FR 68314).

2. Additional New Technology APC Groups

As stated above, for the CY 2017 update, there are 48 levels of New Technology APC groups with two parallel status indicators; one set with a status indicator of ''S'' and the other set with a status indicator of ''T.'' To improve our ability to pay appropriately for new technology services and procedures, in the CY 2017 OPPS/ASC proposed rule (81 FR 45646), we proposed to expand the New Technology APC groups by adding 3 more levels, specifically, adding New Technology Levels 49 through 51. We proposed this expansion to accommodate the assignment of retinal prosthesis implantation procedures to a New Technology APC, which is discussed in section III.C.3. of this final rule with comment period. Therefore, for the CY 2017 OPPS update, we proposed to establish 6 new groups of New Technology APCs, APCs 1901 through 1906 (for New Technology APC Levels 49 through 51), with procedures assigned to both OPPS status indicators ''S'' and ''T.'' These new groups of APCs have the same payment levels with one set subject to the multiple procedure payment reduction (procedures assigned to status indicator ''T'') and the other set not subject to the multiple procedure

payment reduction (procedures assigned to status indicator ''S''). Each proposed set of New Technology APC groups has identical group titles, payment rates, and minimum unadjusted copayments, but a different status indicator assignment. Table 10 of the CY 2017 OPPS/ASC proposed rule included the complete list of the proposed additional 6 New Technology APC groups for CY 2017 (81 FR 45646).

We did not receive any public comments on the proposed expansion of the New Technology APC groups, specifically, adding New Technology Levels 49 through 51 for New Technology APCs 1901 through 1906. Therefore, we are finalizing our proposal, without modification. Table 10 lists the final CY 2017 New Technology APCs and the group titles for New Technology Levels 49 through 51. The payment rates for New Technology APCs 1901 through 1906 can be found in Addendum A to this final rule with comment period (which is available via the Internet on the CMS Web site).

TABLE 10—FINAL CY 2017 ADDITIONAL NEW TECHNOLOGY APC GROUPS

New CY 2017 APC	CY 2017 APC title	Final CY 2017 SI
1901	New Technology—Level 49 ($100,001–$120,000)	S
1902	New Technology—Level 49 ($100,001–$120,000)	T
1903	New Technology—Level 50 ($120,001–$140,000)	S
1904	New Technology—Level 50 ($120,001–$140,000)	T
1905	New Technology—Level 51 ($140,001–$160,000)	S
1906	New Technology—Level 51 ($140,001–$160,000)	T

3. Procedures Assigned to New Technology APC Groups for CY 2017

a. Overall Proposal

As we explained in the CY 2002 OPPS final rule with comment period (66 FR 59902), we generally retain a procedure in the New Technology APC to which it is initially assigned until we have obtained sufficient claims data to justify reassignment of the procedure to a clinically appropriate APC. However, in cases where we find that our initial New Technology APC assignment was based on inaccurate or inadequate information (although it was the best information available at the time), or we obtain new information that was not available at the time of our initial New Technology APC assignment, or where the New Technology APCs are restructured, we may, based on more recent resource utilization information (including claims data) or the availability of refined New Technology APC cost bands, reassign the procedure or service to a different New Technology APC that more appropriately reflects its cost (66 FR 59903).

Consistent with our current policy, for CY 2017, in the CY 2017 OPPS/ASC proposed rule (81 FR 45646), we proposed to retain services within New Technology APC groups until we obtain sufficient claims data to justify reassignment of the service to a clinically appropriate APC. The flexibility associated with this policy allows us to reassign a service from a New Technology APC in less than 2 years if sufficient claims data are available. It also allows us to retain a service in a New Technology APC for more than 2 years if sufficient claims data upon which to base a decision for reassignment have not been obtained (66 FR 59902).

For CY 2016, only two procedure codes, specifically, HCPCS codes C9740 (Cystourethroscopy, with insertion of transprostatic implant; 4 or more implants) and 0100T (Placement of a subconjunctival retinal prosthesis receiver and pulse generator, and implantation of intra-ocular retinal electrode array, with vitrectomy) received payment through a New Technology APC. In the CY 2017 OPPS/ASC proposed rule (81 FR 45646 through 45648), we proposed to reassign HCPCS code C9740 from APC 1565 (New Technology—Level 28 ($5000–$5500)) to APC 5376 (Level 6 Urology and Related Services), and to reassign CPT code 0100T from APC 1599 (New Technology—Level 48 ($90,000–$100,000)) to APC 1906 (New Technology—Level 51 ($140,001–$160,000)). We received public comments on the proposed APC assignment revisions for both procedure codes. Below in section III.C.3.b. of this final rule with comment period, we discuss the public comments we received, our responses, and our final policy for CY 2017 for CPT code 0100T on the retinal prosthesis implant procedure. In section III.D.4.a. of this final rule with comment period, we discuss the public comments we received, our responses, and our final policy for CY 2017 for HCPCS code C9740 on cystourethroscopy.

b. Retinal Prosthesis Implant Procedure

As stated above, in the CY 2017 OPPS/ASC proposed rule, we proposed to revise the APC assignment for CPT code 0100T from New Technology APC 1599 to New Technology APC 1906. CPT code 0100T describes the implantation of a retinal prosthesis, specifically, a procedure involving use of the Argus® II Retinal Prosthesis System. This first retinal prosthesis was approved by the FDA in 2013 for adult patients diagnosed with advanced retinitis pigmentosa. Pass-through payment status was granted for the Argus® II device under HCPCS code C1841 (Retinal prosthesis, includes all internal and external components) beginning October 1, 2013, and expired on December 31, 2015. We note that after pass-through payment status expires for a medical device, the payment for the device is packaged into the payment for the associated surgical procedure. Consequently, for CY 2016, the device described by HCPCS code C1841 was assigned to OPPS status indicator ''N'' to indicate that payment for the device is packaged and included in the payment rate for the surgical procedure described by CPT code 0100T. For CY 2016, CPT code 0100T is assigned to APC 1599 with a payment rate of $95,000. This payment includes both the surgical procedure (CPT code 0100T) and the use of the Argus® II device (HCPCS code C1841). However, stakeholders (including the device manufacturer and hospitals) believe that the CY 2016 payment rate for the procedure involving the Argus® II System is insufficient to cover the hospital cost of performing the procedure, which includes the cost of the retinal prosthesis, which has a retail price of approximately $145,000.

For the CY 2017 update, analysis of the CY 2015 OPPS claims data used for the CY 2017 proposed rule showed 5 single claims (out of 7 total claims) for CPT code 0100T, with a geometric mean

cost of approximately $141,900 based on claims submitted between January 1, 2015, through December 31, 2015, and processed through December 31, 2015. In the proposed rule, we noted that the final payment rate in the CY 2017 OPPS/ASC final rule with comment period would be based on claims submitted between January 1, 2015, and December 31, 2015, and processed through June 30, 2016.

Based on the CY 2015 OPPS claims data available for the proposed rule and our understanding of the Argus® II procedure, we proposed to reassign CPT code 0100T from APC 1599 to APC 1906 with a proposed payment rate of approximately $150,000 for CY 2017. We stated that we believe that APC 1906 is the most appropriate APC assignment for the Argus® II procedure. We noted that this payment rate includes the cost of both the surgical procedure (CPT code 0100T) and the retinal prosthesis device (HCPCS code C1841).

Comment: Several commenters supported CMS' proposal to reassign CPT code 0100T from APC 1599 to APC 1906, which had a proposed CY 2017 payment rate of $150,000, and stated that the proposed payment better aligns with the cost of providing the service. However, one commenter stated that, while this change may benefit some hospitals, it does not help hospitals with a low wage-index value because the cost of the technology itself is not affected by the hospital's wages relative to other hospitals. The commenter further stated that the use of such new technologies as the Argus® II procedure underpays hospitals in less costly wage areas and, therefore, limit its use. Consequently, the commenter suggested that CMS consider the effect of setting new technology payments for hospitals assigned to less costly wage areas.

Response: We appreciate the commenters' support. Based on the updated CY 2015 hospital outpatient claims data used for this final rule with comment period, which is based on claims submitted between January 1, 2015, and December 31, 2015, and processed through June 30, 2016, we believe that APC 1906 remains the most appropriate APC assignment for CPT code 0100T. The latest claims data showed 9 single claims (out of 13 total claims) for CPT code 0100T, with a geometric mean cost of approximately $142,003. We believe that the payment for APC 1906 appropriately captures the cost of providing the service associated with the Argus® II procedure.

With respect to the issue of hospitals with a low wage index, we appreciate the commenter's interest in refining the methodology for new technology APCs under the OPPS. Because we did not propose a change to hospitals with a low wage index values, we will take this comment into consideration in future rulemaking.

After consideration of the public comments we received, we are finalizing our proposal, without modification, to reassign CPT code 0100T from APC 1599 (New Technology—Level 48 ($90,001–$100,000)) to APC 1906 (New Technology—Level 51 ($140,001–$160,000)), which has a final payment rate of $150,000.50 for CY 2017. We note this payment includes both the surgical procedure (CPT code 0100T) and the use of the Argus® II device (HCPCS code C1841).

D. OPPS APC-Specific Policies

1. Cardiovascular Procedures/Services

a. Cardiac Event Recorder (APC 5071)

We proposed to assign procedures described by CPT code 33284 (Removal of an implantable, patient-activated cardiac event recorder) to APC 5071 (Level 1 Excision/Biopsy/Incision and Drainage) for CY 2017. Based on the CY 2015 claims data used for the proposed rule, the geometric mean cost of procedures described by CPT code 33284 was approximately $733 (2,650 single claims), and the geometric mean cost of APC 5071 was approximately $555. In addition, CPT code 33284 is assigned to status indicator ''Q2,'' which indicates that the service is conditionally packaged under the OPPS. Therefore, when this procedure is performed in conjunction with a revision or replacement procedure, the payment for the procedure described by CPT code 33284 is packaged under the OPPS.

Comment: One commenter requested that CMS assign procedures described by CPT code 33284 to a higher paying APC. In particular, the commenter requested that procedures described by CPT code 33284 be assigned to APC 5211 (Level 1 Electrophysiologic Procedures) instead of APC 5071. The commenter believed that the procedure described by CPT code 33284 is more similar clinically and in terms of resource use to the services assigned to APC 5211 than to those assigned to APC 5071.

Response: We disagree with the commenter. We believe that the procedures described by CPT code 33284 are appropriately assigned to APC 5071. Based on updated claims data used for the final rule, the geometric mean cost of CPT code 33284 (approximately $715) is more comparable to the geometric mean cost of APC 5071 (approximately $554) than to the geometric mean cost of APC 5072 (approximately $1,271). Therefore, we do not believe that it would be appropriate to assign procedures described by CPT code 33284 to a higher level within the Excision/Biopsy/Incision and Drainage APC series. In addition, the procedures described by CPT code 33284 are not electrophysiology services and, therefore, do not appropriately correlate with the services assigned to APC 5211. Therefore, we are finalizing our CY 2017 proposal to assign the procedures described by CPT code 33284 to APC 5071.

b. Cardiac Telemetry (APC 5733)

As listed in Addendum B of the CY 2017 OPPS/ASC proposed rule, we proposed to reassign CPT code 93229 (External mobile cardiovascular telemetry with electrocardiographic recording, concurrent computerized real time data analysis and greater than 24 hours of accessible ecg data storage (retrievable with query) with ecg triggered and patient selected events transmitted to a remote attended surveillance center for up to 30 days; technical support for connection and patient instructions for use, attended surveillance, analysis and transmission of daily and emergent data reports as prescribed by a physician or other qualified health care professional) from APC 5722 (Level 2 Diagnostic Tests and Related Services) to APC 5734 (Level 4 Minor Procedures), with a proposed payment rate of $95.66.

Comment: One commenter disagreed with the proposed reassignment of CPT code 93229 to APC 5734, and stated that the proposed payment rate represents a 60-percent decrease from the CY 2016 payment rate of $220.35. The commenter indicated that the proposed underpayment of $95.66 does not reflect the significant costs involved in providing the service. The commenter added that the wearable device used by the beneficiary costs over $21,000. The commenter explained that because of the significant resource costs associated with performing the service described by CPT code 93229, most hospital outpatient facilities that provide this service contract the work to a remote cardiac monitoring service company because HOPDs do not have the devices, technology, or infrastructure in place to provide the service in-house. In addition, the commenter believed that hospitals are still confused about how to code for remote cardiac diagnostic tests, and indicated that the proposed payment rate of $95.66 for CPT code 93229 is the result of hospitals

miscoding the service on claims. The commenter believed that the coding education provided in the April 2015 edition of the Coding Clinic for HCPCS will assist hospitals in coding appropriately for the service. However, until the coding education effort effectuates changes in coding practices, the commenter believed that the true cost of furnishing the service described by CPT code 93229 is more comparable to the OPPS payment rate of approximately $795 made in CY 2012, and recommended that CMS reassign this service to APC 5724 (Level 4 Diagnostic Tests and Related Services), with a proposed payment rate of $870.62. Alternatively, if CMS is unable to reassign the service to APC 5724, the commenter suggested that CMS continue the CY 2016 APC assignment for CPT code 93229 to APC 5722, with a payment rate of $220.35. The commenter further stated that when the service described by CPT code 93229 is provided under the MPFS, the payment rate for performing this service is $732.68. The commenter believed that continuing to assign CPT code 93229 to APC 5722 for CY 2017 will provide payment stability for this service while coding education efforts continue.

Response: Based on our analysis of the CY 2015 claims data used for the proposed rule, we proposed to reassign CPT code 93229 to APC 5734. Specifically, our analysis showed a geometric mean cost of approximately $77 based on 1,847 single claims (out of 3,747 total claims). Based on its clinical and resource homogeneity to the other services, we proposed to reassign the service described by CPT code 93229 to APC 5734, whose geometric mean cost was approximately $100. We did not propose to continue to assign CPT code 93229 to APC 5722 because the geometric mean cost for this APC was approximately $242, which would result in a significant overpayment for the service. However, based on our review of the updated CY 2015 claims data used for this final rule with comment period, we found the geometric mean cost for CPT code 93229 to be lower than the proposed rule geometric mean cost. We note that the proposed rule claims data were based on claims submitted from January 1, 2015, through December 31, 2015, and processed through December 31, 2015, while the final rule with comment period claims data are based on claims submitted from January 1, 2015, through December 31, 2015, and processed through June 30, 2016. Based on our analysis of the final rule with comment period claims data, we found a geometric mean cost of approximately $71 for the service described by CPT code 93229 based on 2,323 single claims (out of 4,495 total claims). The geometric mean cost for the service described by CPT code 93229 is more similar to that of APC 5733 (Level 3 Minor Procedures), which has a geometric mean cost of approximately $56, than to the geometric mean cost of approximately $103 for APC 5734. Consequently, we believe that CPT code 93229 should be reassigned to APC 5733, rather than APC 5734.

Also, as we have stated repeatedly, beyond our standard OPPS trimming methodology that we apply to those claims that have passed various types of claims processing edits, it is not our general policy to judge the accuracy of hospital coding and charging for purposes of ratesetting. (We refer readers to the CY 2011 OPPS/ASC final rule with comment period (75 FR 71838) for further discussion.) Hospitals are responsible for accurately coding the performance of procedures and services and the items furnished to beneficiaries.

In summary, after evaluating the public comment we received and our subsequent analysis of the updated claims data for this final rule with comment period, we are modifying our proposal and reassigning the service described by CPT code 93229 to APC 5733 for CY 2017. The final payment rate for this code can be found in Addendum B to this final rule with comment period (which is available via the Internet on the CMS Web site).

2. Eye-Related Services

Comment: A few commenters requested that CMS assign new CPT code 0465T (Suprachoroidal injection of a pharmacologic agent (does not include supply of medication)) to APC 5694 (Level 4 Drug Administration) instead of APC 5693 (Level 3 Drug Administration) because the commenters believed that the service is clinically similar and similar from a resource-use perspective to CPT code 67028 (Intravitreal injection of a pharmacologic agent (separate procedure), which is assigned to APC 5694.

Response: We agree with the commenters. We are modifying our proposal and assigning CPT code 0465T to APC 5694 for CY 2017. Because CPT code 0465T is new, we do not have claims data upon which to base an initial APC assignment. However, we believe that the clinical and resource similarities of the procedure described by CPT code 0465T, when compared to the procedure described by CPT code 67028, support assigning CPT code 0465T to APC 5694 at this time. When cost and claims data become available for CPT code 0465T, we will reevaluate the APC assignment.

Comment: One commenter requested that CMS pay separately for the new CPT codes 0444T (Initial placement of a drug-eluting ocular insert under one or more eyelids, including fitting, training, and insertion, unilateral or bilateral) and 0445T (Subsequent placement of a drug-eluting ocular insert under one or more eyelids, including re-training, and removal of existing insert, unilateral or bilateral) instead of unconditionally packaging the payment for these services, as proposed.

Response: We disagree with the commenters. The procedure to place one of these inserts under an eyelid (as described by these procedure codes) is a very minor service (not unlike delivering eye drops) that requires little time or effort from a nurse or technician. Any associated additional cost associated with performing these procedures are appropriately packaged with another service.

3. Gastrointestinal Procedures and Services

a. Esophageal Sphincter Augmentation (APC 5362)

For CY 2017, we proposed to assign the procedures described by new CPT code 43284 (Laparoscopy, surgical, esophageal sphincter augmentation procedure, placement of sphincter augmentation device, including cruroplasty when performed) to APC 5362 (Level 2 Laparoscopy and Related Services), with a geometric mean cost of approximately $7,183. CPT code 43284 replaces CPT code 0392T, which replaced HCPCS code C9737. HCPCS code C9737 was in effect for the first half of CY 2015, and CPT code 0392T became effective beginning in the second half of CY 2015 and will be deleted at the end of CY 2016. Based on the claims data used for the proposed rule, the geometric mean cost for the procedure described by HCPCS code C9737 was approximately $10,260 (45 single claims) and the geometric mean cost for the procedure described by CPT code 0392T was approximately $8,453 (19 single claims).

Comment: One commenter disagreed with the proposed APC assignment for procedures described by CPT code 43284 to APC 5362. The commenter stated that the proposed payment rate for APC 5362 does not accurately reflect the anticipated cost of providing the services described by CPT code 43284. The commenter suggested that CMS create a new Level 3 APC within the laparoscopy and related services APC

series that would contain the 20 most costly procedures that are currently assigned to APC 5362. According to the commenter, the creation of this new Level 3 Laparoscopy APC would be more representative of the resource costs for services described by CPT code 43284.

Response: Based on updated claims data for the final rule, we compared the geometric mean cost for procedures described by CPT code 0392T (the predecessor code for CPT code 43284) to the geometric mean cost of APC 5362. The geometric mean cost for procedures described by CPT code 0392T is $8,715 based on 24 single claims, which is $1,551 greater than the geometric mean cost for APC 5362 of $7,164. Furthermore, since CPT code 0392T replaced HCPCS code C9737, the cost of this service has decreased from $10,388 for HCPCS code C9737 to $8,715 for CPT code 0392T. The commenter identified 9,276 single claims using data published with the proposed rule that could be used to create a new Level 3 Laparoscopy and Related Services APC. However, this subgroup of procedures from APC 5362 only contains two significant procedures, and 23 percent of the 40,035 single claims from APC 5362. The services for the suggested Level 3 Laparoscopy and Related Services APC have both sufficient clinical and resource homogeneity to the other procedures assigned to APC 5362. Therefore, we do not believe that there is a need to create another APC for these services.

After consideration of the public comment we received, we are finalizing our proposal, without modification, to assign procedures described by CPT code 43284 to APC 5362, effective January 1, 2017. The final payment rate for CPT code 43284 can be found in Addendum B to this final rule with comment period, which is available via the Internet on the CMS Web site.

b. Esophagogastroduodenoscopy: Transmural Drainage of Pseudocyst (APC 5303)

For CY 2017, we proposed to assign CPT code 43240 (Esophagogastroduodenoscopy, flexible, transoral; with transmural drainage of pseudocyst (includes placement of transmural drainage catheter(s)/stent(s), when performed, and endoscopic ultrasound, when performed)) to APC 5303 (Level 3 Upper GI Procedures), for which we proposed a CY 2017 geometric mean cost of approximately $2,598.

Comment: Commenters disagreed with CMS' proposal to assign CPT code 43240 to APC 5303. The commenters believed that CPT code 43240 would be more appropriately assigned to APC 5331 (Complex GI Procedures), for which we proposed a CY 2017 geometric mean cost of approximately, based upon the procedure's clinical similarity to other endoscopy procedures involving stent placement currently assigned to APC 5331. Additionally, commenters stated that the proposed CY 2017 geometric mean cost of $2,578 may underrepresent the true costs of the procedure because of underreporting of the C-code for stents.

Response: We disagree with the commenters' assertion that CPT code 43240 would be more appropriately assigned to APC 5331. While we acknowledge that a number of endoscopy procedures involving stent placement are currently assigned to APC 5331, we continue to believe that based on our claims data available for CY 2017 ratesetting, the proposed assignment of CPT code 43240 to APC 5303 is appropriate.

After consideration of the public comments we received, we are finalizing our proposal, without modification, to assign CPT code 43240 to APC 5303, which has a final CY 2017 APC geometric mean cost of approximately $2,581. The final payment rate for this code can be found in Addendum B to this final rule with comment period (which is available via the Internet on the CMS Web site).

Comment: One commenter requested that we create a new APC and assign the following four codes to this new APC: (1) HCPCS code G0105 (Colorectal cancer screening; colonoscopy on individual at high risk); (2) HCPCS code G0121 (Colorectal cancer screening; colonoscopy on individual not meeting criteria for high risk); (3) CPT code 44388 (Colonoscopy through stoma; diagnostic, including collection of specimen(s) by brushing or washing, when performed (separate procedure)); and (4) CPT code 45378 (Colonoscopy, flexible; diagnostic, including collection of specimen(s) by brushing or washing, when performed (separate procedure)). The commenters emphasized the clinical importance of colonoscopy in the detection and treatment of colon cancer as a motivation for the creation of this new APC.

Response: We recognize the importance of colonoscopies to Medicare beneficiaries and believe that the OPPS and ASC payment policies for colonoscopies allow full access to these services. As a part of our multi-year review, which includes restructuring and reorganization and consolidation of the OPPS APCs, we have been creating larger APCs based on simpler and more intuitive clinical groupings. We believe that APC 5311 (Level 1 Lower GI Procedures) is an appropriate APC assignment for these four codes from a clinical and resource perspective. We also fail to recognize any particular advantage of creating the suggested new APC that would contain only four codes. The geometric mean cost of CPT code 45378 drives the payment rate for APC 5311 because it represents 81 percent of the single claims in this APC. As we discuss later in the section on the imaging APCs, we are reassigning HCPCS codes G0105 and G0121 to APC 5311. We believe that all four of these codes are clinically similar (all are similar colonoscopy services) and are similar in terms of resource costs based on their geometric mean costs. We are finalizing the proposal to assign HCPCS codes G0105 and G0121, and CPT codes 44388 and 45378 to APC 5311 for CY 2017.

Comment: One commenter believed that some of the tube and catheter placement procedure codes (for example, CPT code 32561 (Installation(s), via chest tube/catheter agent for fibrinolysis (*e.g.,* fibrinolytic agent for break up of multiloculated effusion); initial day) that were assigned to APC 5301 (Level 1 Upper GI Procedures) in the proposed rule are not clinically similar to the endoscopy procedures that have traditionally been grouped together in APC 5301 (or its predecessor APC). The commenter requested that CMS reassign the catheter and tube placement procedure codes to other APCs that would be more clinically suitable.

Response: Upon further review of the procedure codes assigned to APC 5301, we agree with the commenter. Table 11 below shows the final APC reassignments for the tube and catheter placement and removal procedure codes that were assigned to APC 5301 in the proposed rule.

TABLE 11—TUBE AND CATHETER CODES REASSIGNED FROM APC 5301

CPT code	Descriptor	Final CY 2017 APC	Final CY 2017 SI
32552	Removal of indwelling tunneled pleural catheter with cuff	5181	Q2
32554	Thoracentesis, needle or catheter, aspiration of the pleural space; without imaging guidance	5181	T
32555	Thoracentesis, needle or catheter, aspiration of the pleural space; with imaging guidance	5181	T
32560	Instillation, via chest tube/catheter, agent for pleurodesis (*e.g.,* talc for recurrent or persistent pneumothorax).	5181	T
32561	Installation(s), via chest tube/catheter agent for fibrinolysis (*e.g.,* fibrinolytic agent for break up of multiloculated effusion); initial day.	5181	T
32562	(Installation(s), via chest tube/catheter agent for fibrinolysis (*e.g.,* fibrinolytic agent for break up of multiloculated effusion); subsequent day.	5181	T
32960	Pneumothorax, therapeutic, intrapleural injection of air	5181	T
36575	Repair of tunneled or non-tunneled central venous access catheter, without subcutaneous port or pump, central or peripheral insertion site.	5181	T
36589	Removal of tunneled central venous catheter, without subcutaneous port or pump	5181	Q2
61070	Puncture of shunt tubing or reservoir for aspiration or injection procedure	5442	T

We are reassigning all of the procedure codes listed in the above table to APC 5181 (Level 1 Vascular Procedures), except for CPT code 61070 which we are reassigning to APC 5442. We believe that APC 5181 is the most appropriate APC assignment because it currently contains various catheter insertion and removal codes and similar procedures that use catheters. We do not believe that the nine procedures codes that we are reassigning to APC 5181 are sufficiently unique that a new APC specifically for assignment of these nine codes is warranted. We also understand that these codes are at the low end of the cost range for the procedures assigned to APC 5181, but APC 5181 is the lowest cost APC in this series. We also understand that the lung procedures that we are proposing to reassign to APC 5181 are not vascular procedures, but we believe that they are generally sufficiently similar to vascular catheter insertion procedures such that assignment to APC 5181 is clinically appropriate, and that a dedicated lung procedures APC is not necessary. However, to acknowledge that these APCs includes services that are not strictly ''vascular,'' we are renaming the Vascular Procedures APCs (5181 through 5183) Levels 1 through 3 to ''Vascular Procedures & Related Services.''

4. Musculoskeletal Procedures/Services

Consistent with CMS' statutory requirement under section 1833(t)(9)(A) of the Act to review and revise APC assignments annually and to construct the most appropriate APC groupings, as well as, to the extent desirable, correct any 2 times rule violations, we evaluated the resource costs and clinical coherence of the procedures associated with the Closed Treatment Fracture and Related Services (APCs 5111, 5112, and 5113) and Musculoskeletal Procedures APCs (APCs 5121, 5122, 5123, 5124, and 5125). For the CY 2017 OPPS update, we reviewed the procedures assigned to the Closed Treatment Fracture and Musculoskeletal Procedures APCs, and consolidated the two APC groups into the Musculoskeletal APC group, with six Levels, to improve the homogeneity of the procedures within these two APC groups. Based on our analysis of the CY 2015 hospital outpatient claims data used for the proposed rule, we proposed some modifications to these groups as reflected in Addendum B to the CY 2017 OPPS/ASC proposed rule. Specifically, we proposed to reassign certain procedures from one level within an APC to another; either from a lower-level paying APC to a higher-level paying APC, or from a higher-level paying APC to a lower-level paying APC, depending on the geometric mean cost for each procedure code. In addition, we proposed to revise the APC group title from ''Closed Treatment Fracture and Related Services'' to ''Musculoskeletal Procedures,'' and also proposed to establish a new level within the APC, specifically, Level 6, for the assignment of musculoskeletal procedures. We believe that the proposed restructuring and consolidation of the musculoskeletal APCs more appropriately group the musculoskeletal services according to their current resource costs, as well as their clinical characteristics.

Comment: Some commenters supported the reorganization and the increase in the number of musculoskeletal APC levels from five to six. One commenter expressed approval for the number of procedures assigned to Level 6 within the APC and stated that the methodology for assigning procedures to this level is logical, consistent with other APCs, and leads to more appropriate hospital payments. One commenter also stated that the change will help correct the problem associated with those musculoskeletal procedures that had previously shifted to the more costly inpatient setting because of inadequate payments under the hospital OPPS. Consequently, these commenters requested that CMS finalize the proposal.

Response: We appreciate the commenters' support.

Comment: One commenter requested that CMS reevaluate the procedure codes assigned to Level 4 within the Musculoskeletal Procedures APC to ensure that these services are paid appropriately. The commenter expressed concern with the range of costs for the procedures assigned to Level 4 and 5, and stated that the current proposal underpays for some of the procedures assigned to Level 4. To correct the variation of costs between Level 4 and 5, the commenter suggested reassigning some of the procedures from Level 4 to Level 5, or alternatively, establishing a new, intermediate level APC whose geometric mean cost is between Level 4 and 5.

Response: We appreciate the commenter's suggestion. However, we believe that the proposed structure of the musculoskeletal APCs with six levels, compared to last year's five levels, improves the homogeneity of the procedures within the musculoskeletal APC group. As we do annually, we will again review and evaluate the APC assignments for all items, procedures, and services paid under the hospital OPPS for the CY 2018 rulemaking.

We also received several public comments concerning the proposed reassignment of certain procedures assigned to the Musculoskeletal Procedures APCs. A summary of the

public comments and our responses follow.

a. Auditory Osseointegrated Implants/Bone-Anchored Hearing Systems (APCs 5114, 5115, and 5116)

In Addendum B of the CY 2017 OPPS/ASC proposed rule, we proposed to reassign four auditory osseointegrated implant procedures. Specifically, as listed in Table 12 below, we proposed to reassign CPT code 69714 from APC 5125 (Level 5—Musculoskeletal Procedures) to APC 5115 (Level 5—Musculoskeletal Procedures), CPT code 69715 from APC 5125 to APC 5116 (Level 6—Musculoskeletal Procedures), CPT code 69717 from APC 5123 (Level 3—Musculoskeletal Procedures) to APC 5114 (Level 4—Musculoskeletal Procedures), and CPT code 69718 from APC 5124 (Level 4—Musculoskeletal Procedures) to APC 5115.

TABLE 12—PROPOSED CY 2017 STATUS INDICATOR (SI), APC ASSIGNMENTS, AND PAYMENT RATES FOR THE AUDITORY OSSEOINTEGRATED PROCEDURES

CPT code	Long descriptors	CY 2016 OPPS SI	CY 2016 OPPS APC	CY 2016 OPPS payment rate	Proposed CY 2017 OPPS SI	Proposed CY 2017 OPPS APC	Proposed CY 2017 OPPS payment rate
69714	Implantation, osseointegrated implant, temporal bone, with percutaneous attachment to external speech processor/cochlear stimulator; without mastoidectomy.	J1	5125	$10,537.90	J1	5115	$9,491.00
69715	Implantation, osseointegrated implant, temporal bone, with percutaneous attachment to external speech processor/cochlear stimulator; with mastoidectomy.	J1	5125	10,537.90	J1	5116	14,444.00
69717	Replacement (including removal of existing device), osseointegrated implant, temporal bone, with percutaneous attachment to external speech processor/cochlear stimulator; without mastoidectomy.	J1	5123	4,969.26	J1	5114	5,199.03
69718	Replacement (including removal of existing device), osseointegrated implant, temporal bone, with percutaneous attachment to external speech processor/cochlear stimulator; with mastoidectomy.	J1	5124	7,064.07	J1	5115	9,491.00

Comment: One commenter expressed appreciation for the proposed payment increase for CPT codes 69715, 69717, and 69718. However, several commenters opposed the proposed payment decrease for CPT code 69714. The commenters who disagreed with the APC reassignment indicated that the data used by CMS are flawed and do not accurately capture the cost of performing an osseointegrated implant surgery. Some commenters stated that the proposed payment rate for CPT code 69714 would be inadequate to cover the cost of the procedure. These commenters noted that the list price for a Cochlear™ Baha® Implant System ranges from $6,887 to $8,435. Consequently, several commenters requested that CMS not finalize the proposed payment reduction for CPT code 69714 pending the collection of accurate claims data.

Response: As stated above, section 1833(t)(9)(A) of the Act requires the Secretary to review certain components of the OPPS, not less often than annually, and to revise the groups, relative payment weights, and other adjustments that take into account changes in medical practices, changes in technologies, and the addition of new services, new cost data, and other relevant information and factors. As such, we review on an annual basis all APC assignments for both general appropriateness and for violations of the 2 times rule, and when necessary, reassign CPT codes to more appropriate APCs. Although there was no violation of the 2 times rule within the Closed Treatment Fracture and Related Services and Musculoskeletal Procedures APCs, based on our review of the updated CY 2015 claims data used for this CY 2017 OPPS/ASC final rule with comment period, we believe that revising the Musculoskeletal Procedure APC structure is necessary to maintain the clinical homogeneity and resource characteristics of the procedures within this APC group.

In addition, review of the latest hospital outpatient claims data used for this final rule with comment period shows the geometric mean cost for CPT code 69714 is approximately $9,407 based on 703 single claims (out of 713 total claims), which is relatively similar to and slightly less than the final rule geometric mean cost of $9,828 for APC 5115. Therefore, we continue to believe that the procedure described by CPT code 69714 is appropriately placed in APC 5115 based on resource and clinical homogeneity to other procedures currently assigned to APC 5115.

Further, as we do every year, we evaluate our claims data to determine the appropriateness of the APC assignments for all payable services and items under the hospital OPPS. For the CY 2017 OPPS update, based on our review, we proposed to revise the APC assignments for four auditory osseointegrated implant procedures, specifically, CPT codes 69714, 69715, 69717, and 69718. As a result of our APC review for the CY 2017 OPPS update, we note that, based on our review of the final rule with comment period claims data, three of the four procedures, specifically, CPT codes 69715, 69717, and 69718, will receive an increase in payment for CY 2017 under the hospital OPPS.

Comment: Some commenters believed that the proposed payment reduction for CPT code 69714 would restrict Medicare beneficiary access to the procedure.

Response: We disagree with the commenters. We do not believe that the revised payment for CPT code 69714 will affect beneficiaries' access to reasonable and appropriate care. Moreover, we believe that providers will continue to perform this procedure when medically necessary.

After consideration of the public comments we received, we are finalizing our CY 2017 proposal, without modification, to reassign CPT codes 69714, 69715, 69717 and 69718 to APCs 5115, 5116, 5114, and 5115, respectively. Table 13 below lists the final status indicator and APC assignments, and payment rates for the four auditory osseointegrated procedures.

TABLE 13—FINAL CY 2017 STATUS INDICATOR (SI), APC ASSIGNMENTS, AND PAYMENT RATES FOR THE AUDITORY OSSEOINTEGRATED PROCEDURES

CPT code	Long descriptors	CY 2016 OPPS SI	CY 2016 OPPS APC	CY 2016 OPPS payment rate	Final CY 2017 OPPS SI	Final CY 2017 OPPS APC	Final CY 2017 OPPS payment rate
69714	Implantation, osseointegrated implant, temporal bone, with percutaneous attachment to external speech processor/cochlear stimulator; without mastoidectomy.	J1	5125	$10,537.90	J1	5115	$9,557.20
69715	Implantation, osseointegrated implant, temporal bone, with percutaneous attachment to external speech processor/cochlear stimulator; with mastoidectomy.	J1	5125	10,537.90	J1	5116	14,697.92
69717	Replacement (including removal of existing device), osseointegrated implant, temporal bone, with percutaneous attachment to external speech processor/cochlear stimulator; without mastoidectomy.	J1	5123	4,969.26	J1	5114	5,219.36
69718	Replacement (including removal of existing device), osseointegrated implant, temporal bone, with percutaneous attachment to external speech processor/cochlear stimulator; with mastoidectomy.	J1	5124	7,064.07	J1	5115	9,557.20

b. Bunion Correction/Foot Fusion (APC 5114)

In Addendum B of the CY 2017 OPPS/ASC proposed rule, we proposed to reassign CPT codes 28297 (Correction, hallux valgus (bunion), with or without sesamoidectoy; lapidus-type) and 28740 (Arthrodesis, midtarsal or tarsometatarsal, single joint) to APC 5114 (Level 4—Musculoskeletal Procedures) with status indicator ''J1.'' Both CPT codes 28297 and 28740 have a CY 2016 payment rate of approximately $7,064 and a proposed CY 2017 payment rate of approximately $5,199.

Comment: One commenter expressed concern with the reassignment of CPT codes 28297 and 28740 to C–APC 5114, and stated that the proposed payment would result in a significantly lower payment rate for these services. The commenter indicated that its invoices document the total equipment cost at approximately $7,490, which is more than the proposed payment rate for C–APC 5114. The commenter also believed that CPT codes 28297 and 28740 are inappropriately assigned to C–APC 5114 because this APC does not reflect the resource or clinical complexity of these procedures. In addition, the commenter stated that the Musculoskeletal APCs are not granular enough to account for the costs associated with the broad range of orthopedic procedures performed in the hospital outpatient setting. Finally, this same commenter recommended that CMS establish an additional APC level that is not designated as a comprehensive APC for musculoskeletal procedures whose costs are in the range of $7,000 to $7,999. The commenter requested that CMS reassign CPT codes 28297 and 28740 to this new APC level, with a payment rate of approximately $7,500. If CMS is unable to establish an additional APC, the commenter recommended that CMS retain the CY 2016 Musculoskeletal APC structure and payment levels. However, if CMS finalizes the proposal, the commenter requested that CMS ensure that all hospital costs for CPT codes 28297 and 28740 are captured appropriately and that the payment rate for C–APC 5114 is adjusted to reflect the cost of providing these services.

Response: We do not believe that it is necessary to create an additional APC level for these musculoskeletal procedures. We believe that CPT codes 28297 and 28740 are clinically similar to the other procedures assigned to C–APC 5114 with similar resource costs. As the commenter observed, the musculoskeletal APCs include various orthopedic procedures representing a range of costs from $3,774 (CPT code 27385) to $7,283 (CPT code 28740). The payment for procedures assigned to C–APC 5114 is based on the weighted average geometric mean cost for all of the procedures assigned to C–APC 5114. As with most other APCs, because the payment is based on an average of the costs of all of the procedures assigned to the APC, the payment rate can be either above or below the cost of a specific procedure. We believe that the assignment of CPT codes 28297 and 28740 to C–APC 5114 satisfies both the requirement for clinical similarity and resource similarity. There are several other similar foot surgical procedures assigned to C–APC 5114. Further, our claims data do not reveal any 2 times

rule violations in C–APC 5114. We also note that certain complex multi-procedure cases, including cases involving the procedures described by both CPT code 28297 and 28740, receive a complexity adjustment and reassignment to C–APC 5115, which results in a significantly higher payment for these more costly cases. For CY 2017, the payment rate for C–APC 5115 is approximately $9,557. We remind hospitals that, as we do every year, we will again review the APC assignments for all services under the hospital OPPS for the CY 2018 rulemaking.

After consideration of the public comments received, we are finalizing our CY 2017 proposal, without modification, to reassign CPT codes 28297 and 28740 to C–APC 5114. Table 14 below lists the final CY 2017 OPPS status indicator and APC assignments, and payment rates for CPT codes 28297 and 28740. We refer readers to Addendum B of this final rule with comment period for the payment rates for all codes reportable under the OPPS. Addendum B is available via the Internet on the CMS Web site. In addition, the list of codes that qualify for complexity adjustments can be found in Addendum J to this final rule with comment period (which is available via the Internet on the CMS Web site). Addendum J to this final rule with comment period also contains the summary cost statistics for each of the code combinations that describe a complex code combination that qualify for a complexity adjustment and are reassigned to the next higher cost C–APC within the clinical family.

TABLE 14—FINAL CY 2017 STATUS INDICATOR (SI), APC ASSIGNMENTS, AND PAYMENT RATES FOR CPT CODES 28297 AND 28740

CPT code	Long descriptors	CY 2016 OPPS SI	CY 2016 OPPS APC	CY 2016 OPPS payment rate	Final CY 2017 OPPS SI	Final CY 2017 OPPS APC	Final CY 2017 OPPS payment rate
28297	Correction, hallux valgus (bunion), with or without sesamoidectomy; lapidus-type procedure.	J1	5124	$7,064.07	J1	5114	$5,219.36
28740	Arthrodesis, midtarsal or tarsometatarsal, single joint.	J1	5124	7,064.07	J1	5114	5,219.36

c. Intervertebral Biomechanical Devices

For CY 2017, the AMA CPT Editorial Panel deleted CPT code 22851 and replaced it with three new codes, effective January 1, 2017. Table 15 below lists the long descriptor for the procedure described by CPT code 22851, as well as the replacement codes, specifically, CPT codes 22853, 22854, and 22859. We note that the deleted and replacement codes were listed in Addendum B and Addendum O to the CY 2017 OPPS/ASC proposed rule. Addendum B listed the proposed status indicator assignments for the replacement codes, which are assigned to comment indicator ''NP'' (New code for the next calendar year or existing code with substantial revision to its code descriptor in the next calendar year as compared to current calendar year, proposed APC assignment; comments will be accepted on the proposed APC assignment for the new code.), while Addendum O listed the placeholder/proposed CY 2017 CPT codes and their long descriptors.

TABLE 15—CY 2017 STATUS INDICATOR (SI) ASSIGNMENTS FOR THE APPLICATION/INSERTION OF THE INTERVERTEBRAL BIOMECHANICAL DEVICES

Proposed CY 2017 CPT code	Final CY 2017 CPT code	Long descriptors	Proposed CY 2017 OPPS SI	Final CY 2017 OPPS SI
22851	22851	Application of intervertebral biomechanical device(s) (*e.g.,* synthetic cage(s), methylmethacrylate) to vertebral defect or interspace (List separately in addition to code for primary procedure).	D	D
22X81	22853	Insertion of interbody biomechanical device(s) (*e.g.,* synthetic cage, mesh) with integral anterior instrumentation for device anchoring (*e.g.,* screws, flanges), when performed, to intervertebral disc space in conjunction with interbody arthrodesis, each interspace (List separately in addition to code for primary procedure).	N	N
22X82	22854	Insertion of intervertebral biomechanical device(s) (*e.g.,* synthetic cage, mesh) with integral anterior instrumentation for device anchoring (*e.g.,* screws, flanges), when performed, to vertebral corpectomy(ies) (vertebral body resection, partial or complete) defect, in conjunction with interbody arthrodesis, each contiguous defect (List separately in addition to code for primary procedure).	N	N
22X83	22859	Insertion of intervertebral biomechanical device(s) (*e.g.,* synthetic cage, mesh, methylmethacrylate) to intervertebral disc space or vertebral body defect without interbody arthrodesis, each contiguous defect (List separately in addition to code for primary procedure).	N	N

Comment: One commenter suggested that CMS pay separately for the replacement CPT codes 22X81, 22X82, and 22X83 and assign the new codes to New Technology APCs to enable CMS to collect cost information and determine

whether to pay separately or package the procedures in the future. The commenter explained that the cost of providing the procedures associated with these new spine instrumentation codes are costly and include high-cost implants. The commenter also believed that, while CMS has a policy for packaging payment for procedures described by add-on codes under the hospital OPPS, it is not required to do so because its regulation refers only to packaging of certain services described by add-on codes.

Response: We do not agree with the commenter that the spine instrumentation procedures described by proposed CPT codes 22X81, 22X82, and 22X83 (replacement CPT codes 22853, 22854, and 22859) are new technology procedures that warrant an assignment to a new technology APC. These procedures have been performed for some time now in the hospital outpatient setting, and as evidenced by the predecessor code, CPT code 22851 which was established in 1996, these procedures are not new. In addition, we do not agree with the commenter that we should pay separately for replacement CPT codes 22853, 22854, and 22859 because these codes describe add-on services. Since January 1, 2014, payment for procedures described by add-on codes have been packaged under the hospital OPPS. Because the predecessor CPT code 22851 was assigned to a packaged status indicator under the hospital OPPS, we are assigning CPT codes 22853, 22854, and 22859 to status indicator ''N'' to indicate that payment for these services are packaged under the hospital OPPS for CY 2017.

After consideration of the public comment we received, we are finalizing our proposal, without modification, to assign CPT codes 22853, 22854, and 22859 to status indicator ''N'' for CY 2017.

d. Percutaneous Vertebral Augmentation/Kyphoplasty (APC 5114)

In Addendum B of the CY 2017 OPPS/ASC proposed rule, we proposed to reassign CPT codes 22513 (Percutaneous vertebral augmentation, including cavity creation (fracture reduction and bone biopsy included when performed) using mechanical device (*e.g.,* kyphoplasty), 1 vertebral body, unilateral or bilateral cannulation, inclusive of all imaging guidance; thoracic) and 22514 (Percutaneous vertebral augmentation, including cavity creation (fracture reduction and bone biopsy included when performed) using mechanical device (*e.g.,* kyphoplasty), 1 vertebral body, unilateral or bilateral cannulation, inclusive of all imaging guidance; lumbar) from APC 5124 (Level 4 Musculoskeletal Procedures) to APC 5114 (Level 4 Musculoskeletal Procedures). Both CPT codes have a CY 2016 payment rate of approximately $7,064 and a proposed CY 2017 payment rate of approximately $5,199. Because CPT code 22515 (Percutaneous vertebral augmentation, including cavity creation (fracture reduction and bone biopsy included when performed) using mechanical device (*e.g.,* kyphoplasty), 1 vertebral body, unilateral or bilateral cannulation, inclusive of all imaging guidance; each additional thoracic or lumbar vertebral body (list separately in addition to code for primary procedure) is an add-on code, we proposed to continue its packaged status.

Based on the CY 2015 hospital outpatient claims data available for the proposed rule, our analysis revealed a geometric mean cost of approximately $5,434 for APC 5114, while the geometric mean cost for CPT codes 22513 and 22514 is approximately $6,664 and $6,672, respectively. Because the proposed geometric mean cost for APC 5115, which is the Level 5 Musculoskeletal Procedures APC, is significantly higher at $9,920 compared to the geometric mean cost for CPT codes 22513 and 22514, we proposed to assign CPT codes 22513 and 22514 to APC 5114 for CY 2017.

At the August 22, 2016 HOP Panel meeting, a presenter requested the reassessment of the proposed revised Musculoskeletal APC groupings that result in payment reductions for CPT codes 22513 and 22514. Specifically, the commenter observed that the proposed modification to the musculoskeletal APCs reduces the payment for these procedures by 26 percent for CY 2017. During the Panel discussion, CMS indicated that, in the CY 2016 OPPS/ASC proposed rule, the Agency initially proposed to establish four levels of the musculoskeletal APCs. However, based on the comments received on the CY 2016 proposal, CMS agreed with the request to establish a new level, specifically, Level 5 Musculoskeletal Procedures APC, for the CY 2016 update. In addition, during the discussion at the August 2016 Panel meeting, CMS informed the Panel that, for the CY 2017 update, CMS proposed to establish an additional level, specifically, Level 6 Musculoskeletal Procedures APC, for the musculoskeletal procedures. At the August 2016 HOP meeting, despite the request from the presenter, the Panel made no recommendation related to this issue.

Comment: Several commenters disagreed with the proposal and stated that the proposed reassignment of these procedures to APC 5114 would result in significant underpayment for these services. Some commenters noted that the proposed CY 2017 payment rate of $5,199.03 for CPT codes 22513 and 22514 is lower than the geometric mean costs of $6,664 for CPT code 22513 and $6,672 for CPT code 22514. These commenters requested that CMS reassign CPT codes 22513 and 22514 to APC 5115 (Level 5 Musculoskeletal Procedures APC), whose proposed CY 2017 payment rate is $9,491.

Response: We do not agree with the commenters that we should reassign these procedures to APC 5115. Based on the updated CY 2015 hospital outpatient claims data used for this final rule with comment period, our analysis reveals a geometric mean cost of approximately $5,367 for APC 5114, which is lower than the geometric mean cost of approximately $6,674 for CPT code 22513 based on 8,553 single (out of 8,665 total claims), or the geometric mean cost of approximately $6,643 for CPT code 22514 based on 10,451 single claims (out of 10,609 total claims). Because the difference between the geometric mean cost for APC 5115 ($9,828) and the geometric mean costs of CPT code 22513 ($6,674) and CPT code 22514 ($6,643) is significantly greater than the difference between the geometric mean cost of CPT codes 22513 and 22514 and the geometric mean cost of APC 5114 ($5,367), we believe these procedures should be assigned to APC 5114.

In addition, we do not agree with the commenters' assertion that the current assignment of CPT codes 22513 and 22514 in APC 5114 would result in significant underpayment for these services. OPPS payments are based on the geometric mean costs of all of the services assigned to the APC. By definition the costs of some services must be below the geometric mean and others must be above the geometric mean. As we have stated in the past (72 FR 66639), in some cases, payment exceeds the average cost of the CPT code, and in other cases, payment is less than the average cost of the CPT code.

Comment: One commenter stated that procedures described by add-on codes are paid separately in physician offices. However, payment for these services are packaged under the hospital OPPS. This difference results in higher payments for percutaneous vertebral augment/kyphoplasty procedures performed in the office setting compared to the HOPD setting. The commenter further noted that this discrepancy indicates that CMS

may be using a flawed methodology, similar to the CPT Committee and RUC, in determining payment rates for services under the hospital OPPS. Finally, the commenter requested that CMS increase the payment rate for CPT codes 22513 and 22514 to equalize payment for these procedures across all settings.

Response: The hospital OPPS and the MPFS that applies to physician's office services are fundamentally different payment systems with essential differences in their payment policies and structures. Specifically, the hospital OPPS is a prospective payment system, based on the concept of payment for groups of services that share clinical and resource characteristics. Payment is made under the hospital OPPS according to prospectively established payment rates that are related to the relative costs of hospital resources for services. The MPFS is a fee schedule based on the relative value of each individual component of services. Furthermore, physician fee schedule payments include payment for physician professional work, which is not a part of the OPPS payment to hospitals.

In addition, consistent with our general add-on code packaging policy, we package payment for certain procedures described by add-on codes under the hospital OPPS. Because CPT code 22515 is an add-on code, we have assigned this code to a packaged payment status. We believe that the procedure is a service that is always furnished in addition to another procedure (in this case, either CPT code 22513 or 22514) and cannot be performed independently. Under the MPFS approach, separate payment is made for add-on procedures provided in the physician's office, but the OPPS packages payment for add-on codes into the associated procedure code payment for the APC group. We recognize that the MPFS pays separately for CPT code 22515, as it does for other add-on codes. However, the MPFS and the OPPS are very different payment systems. Each is established under a different set of statutory and regulatory principles and the policies established under the MPFS do not have bearing on the payment policies under the OPPS. Given the fundamental difference between the MPFS payment mechanism and the OPPS payment mechanism, differences in the degrees of packaged payment and separate payment between these two systems are to be expected.

After consideration of the public comments we received, we are finalizing our proposal, without modification, to reassign CPT codes 22513 and 22514 to APC 5114. Table 16 below lists the final OPPS status indicator and APC assignments and payment rates for CPT codes 22513 and 22514 for CY 2017.

TABLE 16—FINAL CY 2017 STATUS INDICATOR (SI), APC ASSIGNMENTS, AND PAYMENT RATES FOR THE PERCUTANEOUS VERTEBRAL AUGMENTATION/KYPHOPLASTY PROCEDURES

CPT code	Long descriptors	CY 2016 OPPS SI	CY 2016 OPPS APC	CY 2016 OPPS payment rate	Final CY 2017 OPPS SI	Final CY 2017 OPPS APC	Final CY 2017 OPPS payment rate
22513	Percutaneous vertebral augmentation, including cavity creation (fracture reduction and bone biopsy included when performed) using mechanical device (*e.g.,* kyphoplasty), 1 vertebral body, unilateral or bilateral cannulation, inclusive of all imaging guidance; thoracic.	J1	5124	$7,064.07	J1	5114	$5,219.36.
22514	Percutaneous vertebral augmentation, including cavity creation (fracture reduction and bone biopsy included when performed) using mechanical device (*e.g.,* kyphoplasty), 1 vertebral body, unilateral or bilateral cannulation, inclusive of all imaging guidance; lumbar.	J1	5124	7,064.07	J1	5114	5,219.36.
22515	Percutaneous vertebral augmentation, including cavity creation (fracture reduction and bone biopsy included when performed) using mechanical device (*e.g.,* kyphoplasty), 1 vertebral body, unilateral or bilateral cannulation, inclusive of all imaging guidance; each additional thoracic or lumbar vertebral body (list separately in addition to code for primary procedure).	N	N/A	Packaged	N	N/A	Packaged.

e. Strapping and Casting Applications (APCs 5101 and 5102)

For the CY 2016 update, APCs 5101 (Level 1 Strapping and Cast Application) and 5102 (Level 2 Strapping and Cast Application) are assigned to OPPS status indicator ''S'' (Procedure or Service, Not Discounted When Multiple; Paid under OPPS; separate APC payment) to indicate that the procedures and/or services assigned to these APCs are not discounted when two or more services are billed on the same date of service.

For the CY 2017 update, based on our analysis of the procedures assigned to APCs 5101 and 5102, in the CY 2017 OPPS/ASC proposed rule (81 FR 45648), we proposed to revise the status indicator assignment for these procedures from ''S'' to ''T'' (Procedure or Service, Multiple Procedure

Reduction Applies; Paid under OPPS; separate APC payment) to indicate that the services are paid separately under the OPPS, but a multiple procedure payment reduction applies when two or more services assigned to status indicator ''T'' are billed on the same date of service. Because the procedures assigned to APCs 5101 and 5102 are often associated with surgical treatments, we stated that we believe that the proposed reassignment of these procedures to status indicator ''T'' is appropriate and ensures adequate payment for the procedures, even when the multiple procedure discounting policy applies. Also, there is no payment reduction unless there is another status indicator ''T'' procedure reported on the claim describing cast/splint/strap services. Consequently, we also proposed to revise the status indicator assignment for APCs 5101 and 5102 from ''S'' to ''T'' for the CY 2017 OPPS update to appropriately categorize the procedures assigned to these two APCs.

Comment: Several commenters opposed the status indicator reassignment from ''S'' to ''T'' for APCs 5101 and 5102, and stated that CMS did not provide substantive information for the proposed change, making it difficult for stakeholders to properly analyze the effects of the proposed change. Other commenters indicated that such a change contradicts current coding guidelines.

Response: As stated above, as part of our annual review, we examine the APC assignments for all items and services under the OPPS, which include review of status indicators, for appropriate placements in the context of our proposed policies for the update year. Although not every code, status indicator, or APC revision is discussed in the preamble of the proposed rule, they are nonetheless listed in Addendum B of the proposed rule. We note that Addendum B of the proposed rule is an Excel file that is arranged in CPT/HCPCS code order and shows the proposed OPPS status indicator and APC assignments, relative payment weights, and payment rates for every procedure code reported under the hospital OPPS.

Comment: Some commenters indicated that the National Correct Coding Initiative (NCCI) guidelines prevent the reporting of casting/strapping services when performed as part of a surgical procedure. Other commenters stated that the AMA CPT code instructions indicate that CPT codes 29700 through 29799 are only reported when the service is for a replacement procedure following a period of follow-up, or when the service is performed as the primary treatment without an associated restorative treatment or procedure(s). The commenters urged CMS not to finalize the proposal.

Response: We do not believe that the commenters completely understand the NCCI or CPT coding guidelines associated with the strapping and casting services. While it is true that strapping and casting services cannot be reported separately when performed as part of a surgical procedure, there are certain circumstances when strapping and casting services can be performed separate from a surgical procedure. It should be noted that Chapter IV (Surgery: Musculoskeletal System) of the 2016 NCCI Policy Manual for Medicare Services states that hospitals paid under the OPPS should report the appropriate casting, splinting, or strapping code in certain instances. Specifically, the NCCI Policy Manual specifies that for payment under the OPPS, if a hospital treats a fracture, dislocation, or injury with a cast, splint, or strap as an initial service without any other definitive procedure or treatment, the hospital should report the appropriate casting/splinting/strapping CPT code. In addition, while it is true that the procedures described by CPT codes 29700 through 29799 are only reported when the service is for a replacement procedure following a period of follow-up, or when the service is performed as the primary treatment without an associated restorative treatment or procedure(s), the CPT guidelines also elaborate that these removal/repair codes can be reported separately if the initial application of the cast, splint, or strapping was performed by a different entity.

Comment: Some commenters stated that casting and strapping services are performed in the emergency department for Medicare patients following a fall or injury, and these patients often require an extended period of observation before they are discharged. These commenters stated that revising the status indicator assignment for APCs 5101 and 5102 from ''S'' to ''T'' would no longer qualify hospitals for comprehensive observation service APC payments.

Response: We do not anticipate that this will be a significant issue because all observation services that are less than 8 hours are packaged into the payment for the emergency department visit. We do not believe that most Medicare beneficiaries would require long periods of observation after receiving cast/splint/strap services in the emergency room. Instead, we believe that physicians would appropriately assess the patient and determine whether the patient should be discharged to home or admitted as an inpatient.

After consideration of the public comments we received, we are finalizing our proposal, without modification, to revise the status indicator assignment for APCs 5101 and 5102 from ''S'' to ''T'' for CY 2017.

5. Nervous System Procedures/Services

a. Transcranial Magnetic Stimulation Therapy (TMS) (APCs 5721 and 5722)

Currently, three CPT codes exist to describe TMS therapy, specifically, CPT codes 90867, 90868, and 90869. As shown on Table 17 below, for CY 2016, we proposed to assign these codes to APC 5722 (Level 2 Diagnostic Tests and Related Services).

TABLE 17—PROPOSED CY 2017 STATUS INDICATOR (SI), APC ASSIGNMENTS, AND PAYMENT RATES FOR THE TRANSCRANIAL MAGNETIC STIMULATION THERAPY (TMS) CODES

CPT code	Long descriptors	CY 2016 OPPS SI	CY 2016 OPPS APC	CY 2016 OPPS payment rate	Proposed CY 2017 OPPS SI	Proposed CY 2017 OPPS APC	Proposed CY 2017 OPPS payment rate
90867	Therapeutic repetitive transcranial magnetic stimulation (tms) treatment; initial, including cortical mapping, motor threshold determination, delivery and management.	S	5722	$220.35	S	5722	$231.67

TABLE 17—PROPOSED CY 2017 STATUS INDICATOR (SI), APC ASSIGNMENTS, AND PAYMENT RATES FOR THE TRANSCRANIAL MAGNETIC STIMULATION THERAPY (TMS) CODES—Continued

CPT code	Long descriptors	CY 2016 OPPS SI	CY 2016 OPPS APC	CY 2016 OPPS payment rate	Proposed CY 2017 OPPS SI	Proposed CY 2017 OPPS APC	Proposed CY 2017 OPPS payment rate
90868	Therapeutic repetitive transcranial magnetic stimulation (tms) treatment; subsequent delivery and management, per session.	S	5722	220.35	S	5722	231.67
90869	Therapeutic repetitive transcranial magnetic stimulation (tms) treatment; subsequent motor threshold re-determination with delivery and management.	S	5722	220.35	S	5721	127.42

As we do every year, we review the APC assignments for all services under the hospital OPPS based on the latest claims data. For CY 2017, we did not propose to make any changes to the APC assignment for CPT codes 90867 and 90868, and proposed to continue to assign the procedures described by these procedure codes to APC 5722 because the geometric mean cost for these procedures were within the range of the geometric mean costs for procedures assigned to APC 5722. Specifically, our proposed rule claims data showed a geometric mean cost of approximately $196 based on 136 single claims (out of 136 total claims) for CPT code 90867, and approximately $187 for CPT code 90868 based on 5,239 single claims (out of 5,287 total claims). Because the geometric mean cost of $196 and $187 are relatively similar to the geometric mean cost of $242 for APC 5722, we proposed to continue to assign CPT codes 90867 and 90868 to APC 5722. However, for CPT code 90869, we proposed to reassign CPT code 90869 to APC 5721 (Level 1 Diagnostic Tests and Related Services) based on the latest claims data used for the proposed rule. Specifically, our claims data showed a geometric mean cost of approximately $119 based on 47 single claims (out of 47 total claims). Because the geometric mean cost of $133 for APC 5721 is relatively similar to the geometric mean cost of $119 for CPT code 90869, we proposed to reassign the procedure code to APC 5721.

Comment: One commenter disagreed with the proposal to reassign CPT code 90869 to APC 5721, and requested that CMS continue to assign the procedure to APC 5722. The commenter believed that the proposed CY 2017 payment rate of $127.42 is the result of low-volume and incorrect revenue code reporting. The commenter noted that, based on its analysis of the claims data, one hospital's inappropriate revenue code assignment resulted in a low cost-to-charge ratio, thereby decreasing the proposed payment rate. In addition, the commenter believed that the proposed payment rate for CPT code 90869, which involves a redetermination and TMS delivery and management services, should be higher than the proposed payment rate for CPT code 90868, which involves only TMS delivery and management services.

Response: As we have stated in section 20.5 (Clarification of HCPCS Code to Revenue Code Reporting) of Chapter 4 of the Medicare Claims Processing Manual, hospitals are responsible for reporting the correct revenue code on the claim form. Specifically, we state that we do not instruct hospitals on how to report the assignment of HCPCS codes to revenue codes for services provided under OPPS because hospitals' costs vary. Where explicit instructions are not provided, providers should report their charges under the revenue code that will result in the charges being assigned to the same cost center to which the cost of those services are assigned in the cost report. We note that the Medicare cost report form allows hospitals to report in a manner that is consistent with their own financial accounting systems and, therefore, should be accurate for each individual hospital. Moreover, we believe that the cost report data and their use in the OPPS cost estimation and payment rate development process, combined with potential penalties for inaccurate reporting, provide financial incentive for hospitals to report costs accurately. Furthermore, as we have stated repeatedly, beyond our standard OPPS trimming methodology that we apply to those claims that have passed various types of claims processing edits, it is not our general policy to judge the accuracy of hospital coding and charging for purposes of ratesetting. (We refer readers to the CY 2011 OPPS/ASC final rule with comment period (75 FR 71838) for further discussion.) Therefore, we will not question the accuracy of the coding and charging practices in this case.

In addition, based on the latest hospital outpatient claims data used for the final rule with comment period, we believe that APC 5721 is the most appropriate APC assignment for CPT code 90869. Specifically, our claims data show a geometric mean cost of approximately $107 for CPT code 90869 based on 54 single claims (out of 54 total claims), which is similar to the geometric mean cost of approximately $131 for APC 5721. We do not agree with the commenter that maintaining the assignment for CPT code 90869 to APC 5722 is appropriate because its geometric mean cost of approximately $239 is significantly higher than the geometric mean cost of $107 for CPT code 90869. Compared to the geometric mean cost of approximately $239 for APC 5722, we believe that APC 5721 is the most appropriate assignment for CPT code 90869 based on clinical and resource homogeneity with other procedures and services in the APC.

After consideration of the public comment we received, we are finalizing our proposal, without modification, to assign CPT code 90869 to APC 5721 for CY 2017. In addition, we are adopting as final, without modification, the proposed APC assignments for CPT codes 90867 and 90868 for CY 2017. Table 18 below lists the final status indicator and APC assignments and payment rates for the three TMS CPT codes for CY 2017. We refer readers to Addendum B of this final rule with comment period for the payment rates for all codes reportable under the OPPS. Addendum B is available via the Internet on the CMS Web site.

TABLE 18—FINAL CY 2017 STATUS INDICATOR (SI), APC ASSIGNMENTS, AND PAYMENT RATES FOR THE TRANSCRANIAL MAGNETIC STIMULATION THERAPY (TMS) CODES

CPT code	Long descriptors	CY 2016 OPPS SI	CY 2016 OPPS APC	CY 2016 OPPS payment rate	Final CY 2017 OPPS SI	Final CY 2017 OPPS APC	Final CY 2017 OPPS payment rate
90867	Therapeutic repetitive transcranial magnetic stimulation (tms) treatment; initial, including cortical mapping, motor threshold determination, delivery and management.	S	5722	$220.35	S	5722	$232.21
90868	Therapeutic repetitive transcranial magnetic stimulation (tms) treatment; subsequent delivery and management, per session.	S	5722	220.35	S	5722	232.21
90869	Therapeutic repetitive transcranial magnetic stimulation (tms) treatment; subsequent motor threshold re-determination with delivery and management.	S	5722	220.35	S	5721	127.05

b. Percutaneous Epidural Adhesiolysis (APC 5443)

As listed in Addendum B of the CY 2017 OPPS/ASC proposed rule, we proposed to continue to assign CPT codes 62263 (Percutaneous lysis of epidural adhesions using solution injection (*e.g.,* hypertonic saline, enzyme) or mechanical means (*e.g.,* catheter) including radiologic localization (includes contrast when administered), multiple adhesiolysis sessions; 2 or more days) and 62264 (Percutaneous lysis of epidural adhesions using solution injection (*e.g.,* hypertonic saline, enzyme) or mechanical means (*e.g.,* catheter) including radiologic localization (includes contrast when administered), multiple adhesiolysis sessions; 1 day) to APC 5443 (Level 3 Nerve Injections), with a proposed CY 2017 payment rate of approximately $711.

Comment: One commenter expressed concern with the proposed payment rate for CPT codes 62263 and 62264. The commenter stated that these codes were paid for appropriately in CY 2014 and CY 2015. However, the commenter believed that the payment for these procedures has declined beginning in CY 2016. The commenter also suggested that CMS reevaluate the APC structure and consider reinstating the APC classification that was in place during CY 2014 and CY 2015 in which the percutaneous adhesiolysis and radiofrequency neurotomy procedures were combined in the same APC. The commenter stated that the payment rate for the percutaneous adhesiolysis procedures should be the same as the radiofrequency neurotomy procedures, which are assigned to APC 5431 (Level 1 Nerve Procedures), with a proposed payment rate of approximately $1,557.

Response: Based on our analysis of the claims data used for the proposed rule, APC 5443 is the most appropriate APC assignment for CPT codes 62263 and 62264 based on its clinical and resource similarity to the procedures within this APC. Specifically, our analysis revealed a geometric mean cost of approximately $1,149 for CPT code 62263 based on 97 single claims (out of 107 total claims), and a geometric mean cost of approximately $839 for CPT code 62264 based on 2,188 single claims (out of 3,726 total claims). We believe that the geometric mean costs of CPT codes 62263 and 62264 are more similar to the geometric mean cost of approximately $743 for APC 5443. We believe that APC 5431 is not a more appropriate APC for CPT codes 62263 and 62264 because the geometric mean cost for this APC is approximately $1,627.

We also note that we reviewed the updated CY 2015 claims data used for this final rule with comment period. The proposed rule claims data were based on claims submitted from January 1, 2015 through December 31, 2015 and processed through December 31, 2015, while the final rule with comment period claims data are based on claims submitted from January 1, 2015 through December 31, 2015 and processed through June 30, 2016. Based on our analysis of the final rule with comment period claims data, we found a similar pattern for CPT codes 62263 and 62264. Specifically, we found a geometric mean cost of approximately $1,138 for CPT code 62263 based on 109 single claims (out of 121 total claims), and a geometric mean cost of approximately $842 for CPT code 62264 based on 2,243 single claims (out of 3,972 total claims). We note that the geometric mean costs for the significant procedures within APC 5443 range between $603 (CPT code 62310) and $1,083 (CPT code 64640). Because the geometric mean cost for APC 5431 is approximately $1,607, which is greater than the geometric mean cost for either CPT code 62263 or 62264, we believe that APC 5443 is the more appropriate APC assignment for these procedures.

After consideration of the public comment we received, we are adopting as final, without modification, the APC assignment to APC 5443 for CPT codes 62263 and 62264 for CY 2017. The final payment rates for these codes can be found in Addendum B to this final rule with comment period (which is available via the Internet on the CMS Web site).

c. Neurostimulator (APC 5463)

For CY 2017, we proposed to assign CPT code 0268T (Implantation or replacement of a carotid sinus baroreflex activation device; pulse generator only (includes intraoperative interrogation, programming, and repositioning when performed)) to APC 5463 (Level 3 Neurostimulator and Related Procedures), for which we proposed a CY 2017 geometric mean cost of approximately $18,325.

Comment: Commenters disagreed with CMS' proposal to assign CPT code 0268T to APC 5463. The commenters believed that CPT code 0268T would be more appropriately assigned to APC 5464 (Level 4 Neurostimulator and Related Procedures), for which we proposed a CY 2017 geometric mean cost of approximately $27,907. The commenters stated that the relatively

few claims submitted to CMS that are eligible for CY 2017 ratesetting do not accurately reflect the cost of performing this procedure.

Response: We disagree with commenters' assertion that CPT code 0268T would be more appropriately assigned to APC 5464, which has a final CY 2017 APC geometric mean cost of approximately $27,802. Based on available claims data used for CY 2017 ratesetting, the proposed assignment of CPT code 0268T, which has a final CY 2017 geometric mean cost of approximately $21,794, to APC 5463 is appropriate. After consideration of the public comments we received, we are finalizing our proposal, without modification, to assign CPT code 0268T to APC 5463, which has a final CY 2017 APC geometric mean cost of approximately$18,300. The final payment rate for CPT code 0268T can be found in Addendum B to this final rule with comment period (which is available via the Internet on the CMS Web site).

6. Radiologic Procedures and Services

a. Imaging APCs

As a part of our CY 2016 comprehensive review of the structure of the APCs and procedure code assignments, we restructured the APCs that contain imaging services (80 FR 70392). The purpose of this restructuring of the OPPS APC groupings for imaging services was to improve the clinical and resource homogeneity of the services classified within the imaging APCs. Recently some stakeholders that provide imaging services in hospitals recommended some further restructuring of the OPPS imaging APCs, again for the purpose of improving the clinical and resource homogeneity of the services classified within these APCs. After reviewing the stakeholder recommendations, we agreed that further improvements can be achieved by making further changes to the structure of the APC groupings of the imaging services classified within the imaging APCs. Therefore, in the CY 2017 OPPS/ASC proposed rule (81 FR 45647), for CY 2017, we proposed to make further changes to the structure of the imaging APCs. In Table 11 of the proposed rule, we listed the CY 2016 imaging APCs, and in Table 12 of the proposed rule we listed our proposed CY 2017 changes to the imaging APCs. This proposal would consolidate the imaging APCs from 17 APCs in CY 2016 to 8 in CY 2017. The specific APC assignments for each service grouping were listed in Addendum B to the proposed rule, which is available via the Internet on the CMS Web site. We noted in the proposed rule that some of the imaging procedures are assigned to APCs that are not listed in the tables of the proposed rule (for example, the vascular procedures APCs). Also, the nuclear medicine services APCs were not included in this proposed APC restructuring. We invited public comments on our proposal to consolidate the imaging APCs from 17 APCs in CY 2016 to 8 in CY 2017.

Comment: One of the stakeholders mentioned above who suggested further restructuring of the OPPS imaging services earlier this year expressed concern with CMS' proposed restructured imaging APCs. In particular, the stakeholder was disappointed that the proposed restructured imaging APCs differed from its specific recommendations. The stakeholder supported, in part, CMS' proposal; in particular, the reassignment of the interventional radiology procedures from imaging APCs to vascular procedure APCs and the maintenance of separate APCs for nuclear medicine procedures. In addition, several other commenters also agreed with CMS' proposal to not change the nuclear medicine APCs. Further, the stakeholder and other commenters requested that CMS provide additional explanation regarding the clinical similarity of the services assigned to the proposed restructured APCs. These commenters also were displeased that CMS assigned procedures that are primarily performed by cardiologists (for example, echocardiography) to APCs that also include imaging tests that are primarily interpreted by radiologists. They requested that CMS separate echocardiography services from other imaging tests. They also pointed out that the proposed groupings are broader than the APC title (that use the term ''Diagnostic Radiology'') descriptions because the proposed APC groupings include imaging tests that are interpreted by physicians other than radiologists. They also suggested additional APC and HCPCS code-specific assignments that are addressed below. The stakeholder and other commenters asked that CMS not adopt the proposed restructuring, and instead adopt their suggested APC structure, which would consolidate the imaging APCs, but would maintain separate APCs for echocardiography services that do not include x-ray, CT, and MRI services. Other commenters also requested that CMS not adopt the restructured imaging APCs. Some of these commenters suggested alternatives, such as maintaining separate APCs for ultrasound tests, but the commenters' primary focus was the payment rates and APC assignments of specific codes, which we discuss in detail below.

Response: We appreciate the stakeholder's and the commenters' support. We agree with the stakeholder that the term ''Imaging'' is more accurate for the titles for this series of APCs instead of the term ''Diagnostic Radiology.'' Therefore, we are modifying our proposal and changing the titles of this diagnostic radiology series of APCs to ''Level X Imaging'' (either without contrast or with contrast). Regarding the commenters' request for further explanation on the clinical similarity of the services assigned to the imaging APCs, we remind commenters that we proposed to reassign the interventional radiology procedures to vascular procedure APCs (APCs 5181, 5182, 5183), recognizing the greater clinical similarity of the reassigned interventional services to the vascular/catheterization procedures that are currently assigned to the vascular procedure APCs. The remaining services that are assigned to the restructured imaging APCs are all diagnostic imaging services that almost all belong to one of the following four primary, well-established imaging modalities: x-ray, ultrasound, computed tomography (CT), or magnetic resonance (MR). When these services are performed in the hospital outpatient department, a technician (sometimes aided by a physician) captures the images by operating one of the types of equipment used for x-ray, ultrasound, CT, or MR. These imaging services are assigned to an APC in either the ''without contrast'' imaging series or the ''with contrast'' imaging series, as required by section 1833(t)(2)(G) of the Act. Assignment of an imaging service to a specific APC within each of these two imaging series (with or without contrast) depends upon the use (or non-use) of a contrast agent and the geometric mean cost of the service, with the range of geometric mean costs within an APC governed by the 2 times rule. It is not relevant to the structure of the APC groupings that physicians of different specialties interpret certain tests (for example, cardiologists generally interpret imaging of the heart, radiologists interpret most other imaging tests, orthopedic surgeons interpret extremity images, and neurologists interpret brain images, among others). Furthermore, APC groupings in general do not necessarily correspond to groupings of procedures that are performed by a given physician

specialty. Some of the APC groupings resemble to some extent traditional physician specialty classifications (for example, the urology series of APCs), but many others do not. We believe that imaging services, which are diagnostic tests including x-rays, ultrasounds (including echocardiography), CT scans, and MRIs are sufficiently clinically similar for APC grouping purposes. We also believe that there is no special advantage to the current CY 2016 scheme that subdivides imaging services into subclasses for x-rays, ultrasounds, etc. The commenters believed that their suggested restructured APCs that were presented to CMS included APCs that grouped these four modalities together (except echocardiography). We believe that the proposed structure of the imaging services APCs satisfies the requirements of section 1833(t)(2)(B) of the Act with greater flexibility (versus the current structure) and without unnecessarily restrictive groupings limited to clinically insignificant traditional modality classifications (for example, CT and x-ray, among others). We see no compelling reason to separate echocardiography procedures, an imaging test of the heart, from other imaging tests in the APC groupings. Furthermore, all other nonimaging diagnostic tests are grouped in APCs (APCs 5721 through 5724) that are separate and distinct from the imaging services APCs because we believe that these nonimaging diagnostic tests are sufficiently clinically dissimilar to imaging tests to warrant separate APCs.

Comment: One commenter objected to the proposed exception to the 2 times rule for APC 5521 (Level 1 Diagnostic Radiology without Contrast), and requested that we explain the basis for the exception further. The commenter also requested that CMS reassign CPT code 75571 from APC 5521 to a higher paying APC for CY 2017.

Response: We explain the basis for the 2 times rule and the proposed exceptions in the CY 2017 OPPS/ASC of the proposed rule (81 FR 45644 through 45645). Table 9 of the CY 2017 OPPS/ASC of the proposed rule listed the proposed APC exceptions to the 2 times rule for CY 2017 (81 FR 45645). The proposal to grant an exception to the 2 times rule for APC 5521 followed from a request made prior to the proposed rule. At that time, the request was that CMS reassign CPT code 75571 from APC 5731 (Level 1 Minor Procedures) to an imaging APC based on greater clinical similarity to other CT services assigned to the imaging APCs. We agreed with the request and proposed to reassign CPT code 75571 to APC 5521, which is the lowest cost imaging APC in the series. Because CPT code 75571 has such a low geometric mean cost ($22.87), its assignment to any imaging APC, even the lowest cost imaging APC 5521 (with a geometric mean cost of $61.53), results in a 2 times rule violation. We proposed to make an exception to the 2 times rule for APC 5521 for CY 2017 because we believed that, for clinical reasons, CPT code 75571 should be assigned to an imaging APC with the other CT services. Therefore, we are finalizing our proposal, without modification, to reassign CPT code 75571 to APC 5521 as a result of the low geometric mean cost of the procedure. The payment rate for CPT code 75571 increases from $12.70 in CY 2016 to $59.84 in CY 2017.

Comment: Several commenters objected to the proposed assignment of CPT code 77080 (Dual-energy X-ray absorptiometry (DXA), bone density study, 1 or more sites; axial skeleton (*e.g.,* hips, pelvis, spine)) to APC 5521. The proposed assignment would reduce the payment rate for this procedure from its current CY 2016 payment rate of $100.69 to $63.33 in CY 2017. The commenters believed that the payment reduction could impair access to this valuable preventive service. The commenters requested that CMS assign CPT code 77080 to a higher paying imaging APC, along with other services that have greater resource similarity to the procedure described by CPT code 77080.

Response: We agree with the commenters. Therefore, we are modifying our proposal, and assigning CPT code 77080 to APC 5522 (Level 2 Diagnostic Radiology without Contrast) for CY 2017. CPT code 77080 has a geometric mean cost of $91.08, which increases the probability of a 2 times rule violation when compared to the second lowest-cost significant procedure assigned to APC 5521, the procedure described by CPT code 71010, which has a geometric mean cost of $46.11. We note that we are not comparing the geometric mean cost of CPT code 77080 to that of CPT code 75571, which is a significant procedure assigned to APC 5521 and that has a geometric mean cost of $22.87, for a 2 times rule violation because as described above, this procedure code assignment was the basis for the exception from the 2 times rule for APC 5521 in the proposed rule. In summary, we are assigning CPT code 77080 to APC 5522, with a final payment rate of $112.69 for CY 2017.

Comment: Several commenters objected to the proposed assignment of HCPCS code G0297 (Low dose CT scan (LDCT) for lung cancer screening) to APC 5521 because it would reduce the payment rate for this procedure from $112.49 in CY 2016 to $63.33 in CY 2017. The commenters expressed concern that such a payment reduction could result in fewer Medicare beneficiaries receiving this service. The commenters also expressed concern about the APC assignment of HCPCS code G0296 (Counseling visit to discuss need for lung cancer screening (LDCT) using low dose CT scan (service is for eligibility determination and shared decision making)) to APC 5821 (Level 1 Health and Behavior Services). The commenters believed that the proposed assignment also would result in a payment reduction from $69.65 in CY 2016 to $25.09 in CY 2017, and could impair access to this cancer screening service. The commenters requested that CMS assign these services to higher paying APCs in the CY 2017 final rule with comment period.

Response: We agree, in part, with the commenters. There were no claims data for these services in CY 2016. Therefore, the CY 2016 APC assignments reflected our best estimate at an appropriate APC assignment in the absence of cost information. For CY 2017, we have cost information for each of these services from the CY 2015 claims data. For HCPCS code G0296, the final rule geometric mean cost is $130.44, but with only 21 single claims. Therefore, we believe that this service should be assigned to APC 5822 (Level 2 Health and Behavior Services), with a payment rate of $70.23. We believe that the services in APC 5822 have greater resource similarity to the procedure described by HCPCS code G0296 than the services assigned to APC 5821. We will reevaluate the APC assignment of this procedure for the CY 2018 rulemaking. For HCPCS code G0297, the CY 2017 final rule geometric mean cost is $49.38. APC 5521, to which we proposed to assign HCPCS code G0297, has a geometric mean cost of $65.16. The next higher level APC in the imaging without contrast APC series, APC 5522, has a geometric mean cost of $119.56. Because the geometric mean cost of HCPCS code G0297 is more comparable to the geometric mean cost of APC 5521 than APC 5522, we believe that resource homogeneity is better supported by the assignment of HCPCS code G0297 to APC 5521. Therefore, in summary, we are modifying our proposal and assigning HCPCS code G0296 to APC 5822. However, we are finalizing our proposal, without modification, to assign HCPCS code G0297 to APC 5521 for CY 2017.

Comment: One commenter requested that CMS not reassign CPT code 78811

(Positron emission tomography (PET) imaging; limited area (*e.g.,* chest, head/neck) from APC 5594 (Level 4 Nuclear Medicine and Related Services) to APC 5593 (Level 3 Nuclear Medicine and Related Services) for CY 2017. The commenter believed that the reassignment is premature because of the lack of sufficient claims data to support the reassignment from the CY 2016 assignment to APC 5594.

Response: We disagree with the commenter. Although there are only 117 single claims for this service in the final rule data, we believe that this is a sufficient number upon which to base an APC assignment. The geometric mean cost of CPT code 78811 has been consistent for the past 2 years. In CY 2016 the geometric mean cost was $912.62 (based on 112 single claims), and the geometric mean cost for CY 2017 is $918.39 (based on 117 single claims). Furthermore, the geometric mean cost of CPT code 78811 is significantly lower than the geometric mean cost of APC 5593 ($1,170.73). Therefore, we believe that APC 5593 is the most appropriate APC assignment for CPT code 78811.

Comment: A few commenters requested that CMS maintain the CY 2016 APC assignment for CPT code 75563 (Cardiac magnetic resonance imaging for morphology and function without contrast material(s), followed by contrast material(s) and further sequences; with stress imaging) to APC 5593 (Level 3 Nuclear Medicine and Related Services), instead of its proposed assignment to APC 5573 (Level 3 Diagnostic Radiology with Contrast). The commenters expressed concern that the proposed payment reduction from $1,108 to $777 could reduce access to this imaging test. The commenters believed that CPT code 75563 has greater clinical and resource similarity to the services in APC 5593 than the services in APC 5573. In particular, the commenters asserted that CPT code 75563 is similar to CPT code 78452 (Myocardial perfusion imaging, tomographic (SPECT) (including attenuation correction, qualitative or quantitative wall motion, ejection fraction by first pass or gated technique, additional quantification, when performed); multiple studies, at rest and/or stress (exercise or pharmacologic) and/or redistribution and/or rest reinjection) because both tests are performed under a stress protocol. The commenter also requested that CMS reassign CPT code 75557 (Cardiac magnetic resonance imaging for morphology and function without contrast material) from APC 5523 (Level 3 Imaging without Contrast) to APC 5591 (Level 1 Nuclear Medicine and Related Services). The commenter believed that such a reassignment would improve clinical and resource similarity with regard to CPT code 75557. Another commenter requested that CMS not assign any non-nuclear medicine services to the nuclear medicine APC series.

Response: We agree with the commenter that requested that we not assign any of these magnetic resonance procedure codes to nuclear medicine APCs. For instance, APC 5593 contains procedures that describe nuclear medicine tests, and CPT code 75563 is a specific type of MRI and not a nuclear medicine test. Also, the geometric mean cost of CPT code 75563 is $745 and the geometric mean cost of the APC to which it is assigned, APC 5573, is $781. These geometric mean costs are very similar. However, the geometric mean cost of APC 5593 is $1,171, which is significantly higher than the geometric mean cost of CPT code 75563. Therefore, assigning CPT code 75563 to APC 5593 would assign the procedure to an APC with clinically dissimilar nuclear medicine tests and resource dissimilar tests that have a geometric mean cost of $1,171 (as compared to the $745 geometric mean cost of CPT code 75563). Therefore, we are finalizing our proposal, without modification, to assign CPT code 75563 to APC 5573. Similarly, the procedure described by CPT code 75557 is not a nuclear medicine test and, therefore, should not be assigned to a nuclear medicine APC such as APC 5591. The geometric mean cost of CPT code 75557 is $266, and the geometric mean cost of the APC to which it is assigned (APC 5523) is $223. Therefore, we believe that APC 5523 is an appropriate APC assignment for CPT code 75557 from a resource perspective. Also, there are many other MRI procedure codes, like CPT code 75557, assigned to APC 5523. In addition, we are reassigning a related code, CPT code 75559 (Cardiac magnetic resonance imaging for morphology and function without contrast material; with stress imaging), from APC 5592 (Level 2 Nuclear Medicine and Related Services) to APC 5523 (Level 3 Imaging without Contrast). The geometric mean costs of these two APCs are comparable, but because the procedure described by CPT code 75559 is not a nuclear medicine test, we believe that APC 5523 is a more appropriate APC assignment than APC 5592 for reasons of clinical similarity.

Comment: One commenter requested that CMS reassign CPT code 70559 (Magnetic resonance (*e.g.,* proton) imaging, brain (including brain stem and skull base), during open intracranial procedure (*e.g.,* to assess for residual tumor or residual vascular malformation); without contrast material(s), followed by contrast material(s) and further sequences) from APC 5181 (Level 1 Vascular Procedures) to an imaging APC because the commenter believed that an imaging APC would be more clinically appropriate than a vascular procedures APC.

Response: We agree with the commenter that CPT code 70559 should be assigned to an imaging APC because this service is more similar to other imaging services than to the procedures assigned to APC 5181. Therefore, we are modifying our proposal, and reassigning CPT code 70559 to APC 5571 (Level 1 Imaging with Contrast).

Comment: A few commenters requested that CMS reassign four HCPCS/CPT codes from APC 5572 (Level 2 Diagnostic Radiology with Contrast) to APC 5573 (Level 3 Diagnostic Radiology with Contrast):

- HCPCS code C8929 (Transthoracic echocardiography, with contrast, or without contrast followed by with contrast, real-time with image documentation (2D), includes M-mode recording, when performed, complete, with spectral Doppler echocardiography, and with color flow Doppler echocardiography);
- CPT code 73722 (Magnetic resonance (*e.g.,* proton) imaging, any joint of lower extremity; with contrast material(s));
- CPT code 73222 (Magnetic resonance (*e.g.,* proton) imaging, any joint of upper extremity; with contrast material(s)); and
- CPT code 72126 (Computed tomography, cervical spine; with contrast material).

These commenters believed that the procedures described by these four codes have greater clinical and resource similarity to the procedures assigned to APC 5573.

Response: We agree, in part, with the commenters. In particular, we believe that HCPCS code C8929 belongs in the same APC with the other echocardiography with contrast services, which is APC 5573, based on clinical and resource similarity resulting from the use of contrast. We also believe that the geometric mean costs of CPT code 73722 ($559.13) and CPT code 73222 ($606.13) support the assignment of these procedures to APC 5573, which has a geometric mean cost of $675.23. However, the final rule geometric mean cost for CPT code 72126 is $363.15. Therefore, we believe that APC 5572 is the more appropriate APC assignment for this procedure.

Comment: A few commenters requested that CMS reassign HCPCS codes G0105 (Colorectal cancer screening; colonoscopy on individual at high risk) and G0121 (Colorectal cancer screening; colonoscopy on individual not meeting criteria for high risk) from APC 5525 (Level 5 Diagnostic Radiology without Contrast) to a more clinically appropriate gastroenterology APC.

Response: We agree with the commenters that a gastroenterology APC would be more clinically appropriate for these colonoscopy services. Therefore, we are modifying our proposal, and reassigning HCPCS codes G0105 and G0121 to APC 5311 (Level 1 Lower GI Procedures). With the reassignment of HCPCS codes G0105 and G0121 from APC 5525 to APC 5311, only five procedures remain in APC 5525. We believe that these remaining five procedures (four of which are non-contrast echocardiography services) can be grouped into APC 5524 (Level 4 Diagnostic Radiology without Contrast), which will be renamed Level 4 Imaging without Contrast. APC 5524 contains other clinically similar non-contrast echocardiography services and the reassignment of these five procedures comports with the provision of the 2 times rule. Therefore, we also are reassigning CPT codes 75984, 93312, 93313, 93315, and 93318 from APC 5525 to APC 5524, and deleting APC 5525.

Comment: Some commenters requested that several procedures be reassigned to the next higher level imaging APC within the APC series. The commenters believed that reassignment of these procedures would improve resource homogeneity within these APCs. These procedures and our responses to this request are listed in Table 19 below.

TABLE 19—SERVICES REQUESTED TO BE REASSIGNED TO THE NEXT HIGHER LEVEL IMAGING APC

CPT code	Long descriptor	Proposed CY 2017 SI	Proposed CY 2017 APC	CMS response (agree or disagree with commenter)	Final CY 2017 SI	Final CY 2017 APC
70545	Magnetic resonance angiography, head; with contrast material(s).	S	5571	Disagree	S	5571
70548	Magnetic resonance angiography, head; with contrast material(s).	S	5571	Disagree	S	5571
70557	Magnetic resonance (*e.g.,* proton) imaging, brain (including brain stem and skull base), during open intracranial procedure (*e.g.,* to assess for residual tumor or residual vascular malformation); without contrast material.	S	5523	Disagree	S	5523
71270	Computed tomography, thorax; without contrast material, followed by contrast material(s) and further sections.	Q3	5571	Disagree	Q3	5571
76010	Radiologic examination from nose to rectum for foreign body, single view, child.	Q1	5521	Disagree	Q1	5521
76498	Unlisted magnetic resonance procedure (*e.g.,* diagnostic, interventional).	S	5521	Disagree	S	5521
76641	Ultrasound, breast, unilateral, real time with image documentation, including axilla when performed; complete.	Q1	5521	Agree	Q1	5522
76642	Ultrasound, breast, unilateral, real time with image documentation, including axilla when performed; limited.	Q1	5521	Disagree	Q1	5521
76816	Ultrasound, pregnant uterus, real time with image documentation, follow-up (*e.g.,* re-evaluation of fetal size by measuring standard growth parameters and amniotic fluid volume, re-evaluation of organ system(s) suspected or confirmed to be abnormal on a previous scan), transabdominal approach, per fetus.	Q1	5521	Agree	Q1	5522
76821	Doppler velocimetry, fetal; middle cerebral artery.	Q1	5521	Agree	Q1	5522
76857	Ultrasound, pelvic (nonobstetric), real time with image documentation; limited or follow-up (*e.g.,* for follicles).	Q3	5521	Agree	Q3	5522
C8903	Magnetic resonance imaging with contrast, breast; unilateral.	Q3	5571	Disagree	Q3	5571
C8918	Magnetic resonance angiography with contrast, pelvis.	Q3	5571	Disagree	Q3	5571

Response: For the procedures in the above table that we disagreed with the commenter regarding the most appropriate APC assignment, the geometric mean cost of each of these procedure codes is very similar to the geometric mean cost of the APC to which we proposed to reassign the procedure in the proposed rule. Therefore, we are finalizing our proposal, without modification, to reassign these proposed procedures to the proposed APCs indicated. For the procedure codes in the table above that we are modifying our proposal to reassign to a different APC than that which was proposed, the geometric mean cost of the procedure is more consistent with the next higher level APC to which we agree supports a more appropriate APC assignment.

Comment: One commenter requested that CMS reassign several procedures to APCs other than any of the imaging APCs. The commenter believed that these procedures are not clinically similar to the other imaging services assigned to the imaging APCs. These procedure codes and our responses are listed in Table 20 below.

Response: We refer readers to the table below for the final CY 2017 APC assignments for the suggested procedure codes. We agree with the commenter that all of the suggested procedures should be reassigned to a different APC, except for the procedures described by CPT code 62303 and HCPCS code C9733. We believe that these two procedure codes describe imaging tests and, therefore, are properly assigned to an APC in the imaging APC series.

TABLE 20—ADDITIONAL SERVICES REQUESTED TO BE REASSIGNED TO NON-IMAGING APCS

CPT/ HCPCS code	Long descriptor	Proposed CY 2017 SI	Proposed CY 2017 APC	CMS response (agree or disagree with commenter)	Final CY 2017 SI	Final CY 2017 APC
36002	Injection procedures (*e.g.,* thrombin) for percutaneous treatment of extremity pseudoaneurysm.	S	5524	Agree	T	5181
43752	Naso- or oro-gastric tube placement, requiring physician's skill and fluoroscopic guidance (includes fluoroscopy, image documentation and report).	Q3	5523	Agree	Q1	5735
43756	Duodenal intubation and aspiration, diagnostic, includes image guidance; single specimen (*e.g.,* bile study for crystals or afferent loop culture).	Q1	5524	Agree	Q1	5301
47531	Injection procedure for cholangiography, percutaneous, complete diagnostic procedure including imaging guidance (*e.g.,* ultrasound and/or fluoroscopy) and all associated radiological supervision and interpretation; existing access.	Q2	5524	Agree	Q2	5341
62303	Myelography via lumbar injection, including radiological supervision and interpretation; thoracic.	Q2	5524	Disagree	Q2	5524
75801	Lymphangiography, extremity only, unilateral, radiological supervision and interpretation.	Q2	5524	Agree	Q2	5181
91200	Liver elastography, mechanically induced shear wave (*e.g.,* vibration), without imaging, with interpretation and report.	Q1	5521	Agree	Q1	5721
93982	Noninvasive physiologic study of implanted wireless pressure sensor in aneurysmal sac following endovascular repair, complete study including recording, analysis of pressure and waveform tracings, interpretation and report.	Q1	5521	Agree	Q1	5721
C9733	Non-ophthalmic fluorescent vascular angiography.	Q2	5523	Disagree	Q2	5523

Comment: One commenter requested that CMS reassign CPT code 91200 from APC 5521 to APC 5721, and modify the proposed status indicator assignment from ''Q1'' (conditionally packaged) to ''S'' (Paid under OPPS; separate APC payment.) in order to separately pay for the test under all circumstances.

Response: Although we agree with the commenter regarding the APC assignment for clinical similarity purposes, we disagree with the commenter regarding the status indicator assignment. The procedure described by CPT code 91200 is an ancillary ultrasound diagnostic test, not unlike the ultrasound tests that were packaged as a part of our ancillary services packaging policy in CY 2015. (We refer readers to the CY 2015 OPPS/ASC final rule with comment period (79 FR 66819) for a further discussion of the ancillary services packaging policy.) Therefore, we are finalizing our proposal, without modification, to assign CPT code 91200 to APC 5721, with a status indicator of assignment of ''Q1'' for CY 2017.

Comment: A few commenters requested that CMS modify the status indicator assignment for HCPCS code C9733 from ''Q2'' to a separately payable status indicator (for example, status indicator ''S''). The commenters noted that status indicator ''Q2'' indicates that payment for the procedure described by HCPCS code C9733 is conditionally packaged when provided in conjunction with other procedures assigned to status indicator ''T,'' which are primarily surgical procedures.

Response: We have responded to this comment in past rules. The service described by HCPCS code C9733 is primarily an intraoperative imaging service. Therefore, it is conditionally packaged under § 419.2(b)(14), which packages intraoperative items and services. When the procedure described by HCPCS code C9733 is not furnished in conjunction with a surgical procedure, then the service is paid separately. We believe that the OPPS payments, separate or packaged, for surgical procedures in which this test is performed in conjunction with (for example, breast reconstruction) are more than adequate to cover the cost of the service described by HCPCS code C9733 for Medicare beneficiaries in need of this service.

Comment: One commenter requested that CMS assign three procedures from APC 5181 (Level 1 Vascular Procedures) to APC 5182 (Level 2 Vascular Procedures) because the geometric mean costs of these procedures are more

comparable to the geometric mean cost of APC 5182 than that of APC 5181:

- CPT code 75731 (Angiography, adrenal, unilateral, selective, radiological supervision and interpretation);
- CPT code 75746 (Angiography, pulmonary, by nonselective catheter or venous injection, radiological supervision and interpretation); and
- CPT code 75810 (Splenoportography, radiological supervision and interpretation).

Response: We disagree with the commenter. Based on the CY 2017 final rule updated claims data, CPT code 75731 only has one single claim, CPT code 75746 only has 5 single claims, and CPT code 75810 only has 2 single claims. The number of claims for these services is too low upon which to base an APC reassignment for better resource homogeneity. Therefore, we are finalizing our proposal, without modification, to assign these three procedures to APC 5181.

After consideration of the public comments we received, we are finalizing the proposals, with the modifications as described above in the responses to the comments on the restructuring and reorganization of the imaging APCs. Table 21 below lists the final seven CY 2017 imaging APCs (not including the four nuclear medicine APCs). All of these APCs are assigned to status indicator ''S,'' although payment for some of the procedures assigned to these APCs are conditionally packaged and are instead assigned to status indicator ''Q1'' or ''Q2.''

TABLE 21—FINAL CY 2017 IMAGING APCS

CY 2017 APC	CY 2017 APC title
5521	Level 1 Imaging without Contrast.
5522	Level 2 Imaging without Contrast.
5523	Level 3 Imaging without Contrast.
5524	Level 4 Imaging without Contrast.
5571	Level 1 Imaging with Contrast.
5572	Level 2 Imaging with Contrast.
5573	Level 3 Imaging with Contrast.

b. Radiation Oncology (APCs 5092, 5611, and 5627)

Comment: A few commenters disagreed with CMS' proposed reassignment of CPT code 19298 (Placement of radiotherapy afterloading brachytherapy catheters (multiple tube and button type) into the breast for interstitial radioelement application following (at the time of or subsequent to) partial mastectomy, includes imaging guidance) to APC 5092 (Level 2 Breast/Lymphatic Surgery and Related Procedures), with a payment rate of approximately $4,395 for CY 2017. In CY 2016, this code is assigned to APC 5093 (Level 3 Breast/Lymphatic Surgery and Related Procedures), with a payment rate of approximately $7,558. The commenters believed that the previous APC assignment to APC 5093 is appropriate and requested that CMS continue to assign CPT code 19298 to APC 5093 for CY 2017.

Response: The geometric mean cost for CPT code 19298 decreased from approximately $6,269 in CY 2016 to approximately $5,128 for CY 2017. This change prompted the proposed reassignment of this code from the Level 3 APC to Level 2. We do not believe that the CY 2017 geometric mean cost supports continued assignment to APC 5093. After consideration of the public comment we received, we are finalizing our proposal, without modification, and reassigning CPT code 19298 to APC 5092 for CY 2017.

Comment: A few commenters suggested that CMS reassign CPT codes 77424 (Intraoperative radiation treatment delivery, x-ray, single treatment session) and 77425 (Intraoperative radiation treatment delivery, electrons, single treatment session) to an APC in the radiation therapy series other than APC 5093 (Level 3 Breast/Lymphatic Surgery and Related Procedures) because these radiation treatment services are not clinically similar to the breast procedures that are assigned to APC 5093.

Response: We agree with the commenters. The assignment of these codes to APC 5093 was intended to be temporary until more claims data for these codes was available. Based on these codes being radiation treatment delivery codes and their geometric mean costs for CPT codes 77424 (approximately $8,701) and 77425 (approximately $7,172), we are reassigning these services to APC 5627 (Level 7 Radiation Therapy), with a geometric mean cost of approximately$7,664. We note that if planning and preparation and imaging services are repackaged into the single session cranial SRS codes (that are assigned to APC 5627) in the future, this could cause the geometric mean cost for the single session cranial SRS codes to increase such that it may no longer be appropriate to group CPT codes 77424 and 77425 with the single session SRS codes in the same APC. However, for CY 2017, APC 5627 is the most appropriate APC for CPT codes 77424 and 77425, both clinically and from a resource-cost perspective. The final payment rate for these codes can be found in Addendum B to this final rule with comment period (which is available via the Internet on the CMS Web site).

Comment: A few commenters requested that CMS create a fourth level in the Therapeutic Radiation Treatment Preparation APC series and assign CPT code 77301 (Intensity modulated radiotherapy plan, including dose-volume histograms for target and critical structure partial tolerance specifications) to this new APC. The commenters believed that the costs from the claims data for CPT code 77301 are lower than the actual current costs because the AMA CPT Editorial Panel bundled simulation services (that used to be separately coded) into the payment for CPT code 77301.

Response: We prefer to wait for the actual claims data before reassigning a code because the cost of a new bundled code is often difficult to predict and often the cost of the new bundled code is significantly less than the sum of the costs of the individual codes that contribute to the bundle. For CY 2017, we are finalizing our proposal to reassign CPT code 77301 to APC 5613.

Comment: A few commenters requested that CMS not reassign CPT codes 77370, 77280, and 77333 to APC 5611 (Level 1 Therapeutic Radiation Treatment Preparation) for CY 2017. These codes are currently assigned to the Level 2 Therapeutic Radiation Treatment Preparation APC (APC 5612) in CY 2016. The payment would decrease from $167 in CY 2016 to $117 in CY 2017.

Response: As we do annually, we examined the APCs in this series. We noticed that the difference in the geometric mean costs between Level 1 and 2 was not significant. Therefore, we proposed to consolidate these two APCs into a single APC and reduce the number of levels in the Therapeutic Radiation Treatment Preparation APC series from four to three. We believe that this change promotes resource homogeneity without excessive granularity with consecutive levels having almost the same mean cost. The range of geometric mean costs for significant services in the proposed CY 2017 APC 5611 (Level 1 Therapeutic Radiation Treatment Preparation) is $101 to $197, which comports with the 2 times rule. Therefore, we are finalizing this proposed APC structure and CPT codes 77370, 77280, and 77333 are assigned to APC 5611 for CY 2017.

7. Skin Substitutes (APCs 5053 through 5055)

For CY 2017, we proposed to assign skin substitute procedures to APCs 5053 through 5055 (Level 3 through 5 Skin Procedures). The cost of the procedures is affected by whether the skin substitute product is low cost or high cost, the surface area of the wound, and the location of the wound.

Comment: Commenters disagreed with the proposed APC assignments for procedures described by HCPCS code C5277 (Application of low cost skin substitute graft to face, scalp, eyelids, mouth, neck, ears, orbits, genitalia, hands, feet, and/or multiple digits, total wound surface area greater than or equal to 100 cm^2; First 100 cm^2 wound surface area, or 1% of body area of infants and children) to APC 5053 (Level 3 Skin Procedures) and procedures described by CPT code 15277 (Application of skin substitute graft to face, scalp, eyelids, mouth, neck, ears, orbits, genitalia, hands, feet, and/or multiple digits, total wound surface area greater than or equal to 100 cm^2; First 100 cm^2 wound surface area, or 1% of body area of infants and children) to APC 5054 (Level 4 Skin Procedures). The commenters stated that the proposed payment rates for APC 5053 and APC 5054 do not accurately reflect the cost of providing the services described by HCPCS code C5277 and CPT code 15277. The commenters further stated that the cost of applying a skin substitute product to a larger wound (surface area greater than or equal to 100 cm^2) should be similar, irrespective of whether the product is applied to the head, genitalia, hands, or feet as compared to the trunk, legs, or arms. The commenters compared the differences between procedures described by HCPCS code C5277 and procedures described by HCPCS code C5273 (Application of low cost skin substitute graft to trunk, arms, legs, total wound surface area greater than or equal to 100 cm^2; First 100 cm^2 wound surface area, or 1% of body area of infants and children). Procedures described by HCPCS code C5273 are assigned to APC 5054, which has a higher geometric mean cost than APC 5053. The commenters did a similar comparison between procedures described by CPT code 15277 and procedures described by CPT code 15273 (Application of skin substitute graft to trunk, arms, legs, total wound surface area greater than or equal to 100 cm^2; First 100 cm^2 wound surface area, or 1% of body area of infants and children). Procedures described by CPT code 15273 are assigned to APC 5055 (Level 5 Skin Procedures), which has a higher geometric mean cost than APC 5054. One commenter believed that the low volume of single claims for procedures described by HCPCS code C5277 and CPT code 15277 may have resulted in inaccurately low geometric mean costs.

Response: We disagree with the commenters. We reviewed the services in both APC 5053 and APC 5054 and found that procedures described by HCPCS code C5277 and CPT code 15277 have both clinical and resource homogeneity to the other 11 procedures assigned to these two APCs. Therefore, there is no justification to assign these procedures to APCs with higher geometric mean costs. The final geometric mean cost of procedures described by HCPCS code C5277 is approximately $810 (based on 26 single claims), which is more comparable to the final geometric mean cost of APC 5053 ($466) than the geometric mean cost of APC 5054 ($1,468). Also, regarding the accuracy of the cost data for these codes, we again note our longstanding policy provides that, beyond our standard OPPS trimming methodology that we apply to those claims that have passed various types of claims processing edits, it is not our general policy to judge the accuracy of hospital coding and charging for purposes of ratesetting. (We refer readers to 75 FR 71838 for a detailed discussion.) Therefore, after consideration of the public comments we received, we are finalizing our proposal, without modification, to assign HCPCS code C5277 to APC 5053 and CPT code 15277 to APC 5054.

Comment: Commenters requested that APC 5053 (Level 3 Skin Procedures) be divided into two APCs in order to separate more resource intensive services using skin substitute products (procedures described by HCPCS codes C5271, C5275, and C5277) from other, less resource intensive skin procedures. The commenters believed an additional APC level within the skin procedures APC series between the current level 3 and level 4 would more closely reflect the cost of the low cost skin substitute application procedures. The commenters also believed that the current APC structure incentivizes hospitals to prefer high cost skin substitutes over low cost skin substitutes.

Response: We disagree with the commenters. We do not believe that it is necessary to expand the skin procedures APC series to six levels. We reviewed the services assigned to APC 5053 and found that all of the procedures assigned to the APC have both sufficient clinical and resource homogeneity. The highest volume low cost skin substitute application procedure, described by HCPCS code C5271 (Application of low cost skin substitute graft to trunk, arms, legs, total wound surface area up to 100 sq cm; first 25 sq cm or less wound surface area), had a final geometric mean cost of $596 (11,256 single claims), and the final geometric mean cost of APC 5053 was $466. While the geometric mean cost of procedures described by HCPCS code C5271 is higher than the geometric mean cost of APC 5053, the difference is well within the span of the two times rule.

In conclusion, we do not believe that there is justification to create another level within the skin procedures APC series by dividing APC 5053 into two APCs. Therefore, after consideration of the public comments we received, we are finalizing our proposal, without modification, to maintain the current five levels of skin procedures APCs.

8. Urology System Procedures and Services

a. Chemodenervation of the Bladder (APC 5373)

As listed in Addendum B of the CY 2017 OPPS/ASC proposed rule, we proposed to continue to assign CPT code 52287 (Cystourethroscopy, with injection(s) for chemodenervation of the bladder) to APC 5373 (Level 3 Urology and Related Services), with a payment rate of approximately $1,642. In addition, we proposed to reassign its status indicator from ''T'' (Procedure or Service, Multiple Procedure Reduction Applies. Paid under OPPS; separate APC payment.) to ''J1'' (Hospital Part B services paid through a comprehensive APC) to indicate that all covered Part B services on the claim are packaged with the primary ''J1'' service for the claim, except for services with OPPS status indicators ''F,'' ''G,'' ''H,'' ''L,'' and ''U''; ambulance services; diagnostic and screening mammography; all preventive services; and certain Part B inpatient services.

We proposed to continue to assign CPT code 52287 to APC 5373 based on the claims data used for the proposed rule. Specifically, our analysis of the claims data showed a geometric mean cost of approximately $2,219 for CPT code 52287 based on 7,464 single claims (out of 7,609 total claims), which fits more appropriately in APC 5373, whose geometric mean cost is approximately $1,716. We did not propose to assign CPT code 52287 to APC 5374 (Level 4 Urology and Related Services) because we would have overpaid for the procedure because the geometric mean

cost for this APC is approximately $2,642.

Comment: One commenter disagreed with the proposed APC assignment for CPT code 52287, and requested that CMS reassign the procedure to APC 5374. The commenter explained that CPT code 52287 describes a procedure that involves the use of the BOTOX® drug for the treatment of overactive bladder (OAB) and detrusor overactivity associated with a neurologic condition (NDO). The commenter also stated that because of the proposed revision to the code's status indicator from ''T'' to ''J1,'' the BOTOX® used in the procedure would no longer be paid separately, whereas in CY 2016 the drug is paid separately under HCPCS code J0585 (Injection, onabotulinumtoxin a, 1 unit). According to the commenter, the resource cost of performing the procedure with 200 units of the drug is significantly greater than that of furnishing 100 units. Consequently, the commenter stated that the payment rate for APC 5373 is inadequate to cover the resource costs associated with performing the procedure and furnishing the drug. The commenter recommended that CMS reconfigure APCs 5373 and 5374 so that all procedures with a geometric mean cost greater than $2,150 are assigned to APC 5374, and to reassign CPT code 52287 to APC 5374. Alternatively, if CMS does not reassign CPT code 52287 to APC 5374, the commenter suggested that CMS establish a complexity adjustment for those procedures that involve a dose of 200 units of BOTOX®.

Response: We believe that APC 5373 is the most appropriate APC assignment for CPT code 52287 based on its resource and clinical homogeneity to the other procedures within the APC. Based on updated CY 2015 claims data for this final rule with comment period, the range of geometric mean costs for significant procedures assigned to APC 5373 is between $1,175 and $2,275. The geometric mean cost of $2,196 for CPT code 52287 is within this range. We do not believe that it would be appropriate to assign CPT code 52287 to APC 5374, whose geometric mean cost is approximately $2,613.

With respect to the issue of the drug cost, the payment for the BOTOX® drug is included in the payment for the procedure described by CPT code 52287. As stated in section II.A.2.c. of this final rule with comment period, the payment for procedures assigned to a ''J1'' status indicator include all drugs, biologicals, and radiopharmaceuticals, regardless of cost, except those drugs with pass-through payment status and those drugs that are usually self-administered (SADs), unless they function as packaged supplies (78 FR 74868 through 74869, 74909, and 79 FR 66800).

On the issue of a complexity adjustment, as listed in Addendum J of the CY 2017 OPPS/ASC proposed rule, specifically, in the ''Complexity Adjustments'' tab of the Excel file, we proposed to reassign CPT code 52287 to a complexity adjustment APC. In particular, we proposed to assign CPT code 52287 to APC 5374 when the procedure is performed in conjunction with other procedures during the same hospital stay that meet the complexity adjustment criteria discussed in section II.A.2.c. of this final rule with comment period.

After consideration of the public comment we received, we are finalizing our proposal, without modification, to assign CPT code 52287 to APC 5373 for CY 2017. The final status indicator and APC assignments and payment rate for this code, where applicable, can be found in Addendum B to this final rule with comment period (which is available via the Internet on the CMS Web site). The list of the complexity adjustments for add-on code combinations for CY 2017, along with all of the other complexity adjustments, can be found in Addendum J to this final rule with comment period (which is available via the Internet on the CMS Web site). Addendum J to this final rule with comment period also contains the summary cost statistics for each of the code combinations that describe a complex code combination that will qualify for a complexity adjustment and will be reassigned to the next higher cost C–APC within the clinical family.

b. Temporary Prostatic Urethral Stent (APC 5373)

As listed in Addendum B of the CY 2017 OPPS/ASC proposed rule, we proposed to continue to assign CPT code 53855 (Insertion of a temporary prostatic urethral stent, including urethral measurement) to APC 5372 (Level 2 Urology and Related Services), with a payment rate of approximately $561.

Comment: One commenter disagreed with the proposed assignment of CPT code 53855 to APC 5372. The commenter believed that the proposed payment rate of approximately $561 for APC 5372 is inadequate to cover the cost of providing the service. The commenter stated that the payment rate of approximately $1,642 for APC 5373 better supports the resource costs and clinical characteristics associated with the procedure described by CPT code 53855 and recommended that CMS reassign the CPT code to this APC for CY 2017.

Response: Based on our analysis of the updated CY 2015 hospital outpatient claims used for this final rule with comment period, we agree with the commenter. Our claims data showed a geometric mean cost of approximately $1,860 for CPT code 53855 based on 31 single claims (out of 31 total claims), which is similar to the geometric mean cost of approximately $1,691 for APC 5373.

After consideration of the public comment we received, we are modifying our proposal and assigning CPT code 53855 to APC 5373 for CY 2017. The final CY 2017 payment rate for this procedure can be found in Addendum B to this CY 2017 OPPS/ASC final rule with comment period (which is available via the Internet on the CMS Web site).

c. Transprostatic Urethral Implant Procedure (TUIP) (APCs 5375 and 5376)

Currently, there are four procedure codes that describe transprostatic urethral implant procedures, specifically, HCPCS codes C9739 and C9740, and CPT codes 52441 and 52442. As shown in Table 22 below, and as listed in Addendum B of the CY 2017 OPPS/ASC proposed rule, we proposed to continue to assign HCPCS code C9739 to APC 5375 (Level 5 Urology and Related Services). We also proposed to reassign HCPCS code C9740 from New Technology APC 1565 (New Technology—Level 28 ($5001-$5500)) to APC 5376 (Level 6 Urology and Related Services), and to reassign the status indicator for HCPCS code C9740 from ''T'' to ''J1.'' In addition, we proposed to continue to assign CPT codes 52441 and 52442 to status indicator ''B'' to indicate that these codes are not recognized by OPPS when submitted on a hospital outpatient Part B bill type (12x and 13x). As we discussed in the CY 2015 OPPS/ASC final rule with comment period (79 FR 66853 through 66854), we do not recognize CPT codes 52441 and 52442 because the code descriptors do not accurately capture the number of implants typically provided in a hospital outpatient or ASC setting.

TABLE 22—PROPOSED CY 2017 STATUS INDICATOR (SI), APC ASSIGNMENTS, AND PAYMENT RATES FOR THE TRANSPROSTATIC URETHRAL IMPLANT PROCEDURES

CPT/HCPCS code	Long descriptors	CY 2016 OPPS SI	CY 2016 OPPS APC	CY 2016 OPPS payment rate	Proposed CY 2017 OPPS SI	Proposed CY 2017 OPPS APC	Proposed CY 2017 OPPS payment rate
C9739	Cystourethroscopy, with insertion of transprostatic implant; 1 to 3 implants.	J1	5375	$3,393.73	J1	5375	$3,460.41
C9740	Cystourethroscopy, with insertion of transprostatic implant; 4 or more implants.	T	1565	5,250.00	J1	5376	7,389.67
52441	Cystourethroscopy, with insertion of permanent adjustable transprostatic implant; single implant.	B	N/A	N/A	B	N/A	N/A
52442	Cystourethroscopy, with insertion of permanent adjustable transprostatic implant; each additional permanent adjustable transprostatic implant (list separately in addition to code for primary procedure).	B	N/A	N/A	B	N/A	N/A

Comment: One commenter expressed concern with the proposed reassignment of HCPCS code C9740 to APC 5376. The commenter stated that the reassignment may not be aligned with the current clinical homogeneity of other procedures assigned to APC 5376 because the procedure described by HCPCS code C9740 is performed through a natural orifice (urethra) and can be performed with local anesthesia. To ensure clinical homogeneity within APC 5376, the commenter requested that CMS reevaluate the appropriate APC assignment for HCPCS code C9740.

Response: As we do every year, we review the APC assignments for all services and items paid under the OPPS. Based on resource and clinical homogeneity, we believe that HCPCS code C9740 is more appropriately assigned to the Urology and Related Services APC series. We reviewed the procedures assigned to the Urology and Related Services APCs and, based on its resource cost and clinical homogeneity, we determined that HCPCS code C9740 most appropriately aligns with the other procedures in the Level 6 APC within the Urology and Related Services APC grouping.

For the proposed rule, our claims data showed a geometric mean cost of approximately $6,312 for HCPCS code C9740 based on 585 single claims (out of 606 total claims), which is relatively similar to the geometric mean cost of approximately $7,723 for APC 5376. We believe that neither APC 5375 (Level 5 Urology and Related Services), whose geometric mean cost is approximately $3,617 or APC 5377 (Level 7 Urology and Related Services), whose geometric mean cost is approximately $15,377, would have been appropriate APC assignments. When compared to the geometric mean cost of $6,312 for HCPCS code C9740, an APC assignment to APC 5375 would underpay for the procedure, while an APC assignment to APC 5377 would overpay for the service. For the final rule with comment period, our updated claims data showed a similar pattern. Specifically, our analysis showed a geometric mean cost of approximately $6,167 for HCPCS code C9740 based on 691 single claims (out of 701 total claims), which is comparable to the geometric mean cost of approximately $7,661 for APC 5376. We believe that an APC assignment to either APC 5375, whose geometric mean cost is approximately $3,581 or APC 5377, whose geometric mean cost is approximately $14,764, would be inappropriate. Based on the updated claims data for the final rule with comment period, we believe that APC 5376 is the most appropriate APC assignment for HCPCS code C9740 based on its clinical homogeneity and resource cost compared to the other procedures within this APC.

Comment: Several commenters agreed with CMS' proposal to continue to assign HCPCS code C9739 to APC 5375 and to reassign HCPCS code C9740 to APC 5376 for CY 2017. The commenters requested that CMS finalize the proposal.

Response: We appreciate the commenters' support. After consideration of the public comments we received, we are adopting as final, without modification, the proposed APC and status indicator assignments for HCPCS codes C9739 and C9740, and CPT codes 52441 and 52442 for CY 2017. Table 23 below lists the final status indicator and APC assignments and payment rates for the transprostatic urethral implant procedures for CY 2017. We refer readers to Addendum B of this final rule with comment period for the payment rates for all codes reportable under the OPPS. Addendum B is available via the Internet on the CMS Web site.

TABLE 23—FINAL CY 2017 STATUS INDICATOR (SI), APC ASSIGNMENTS AND PAYMENT RATES FOR THE TRANSPROSTATIC URETHRAL IMPLANT PROCEDURES

CPT/HCPCS code	Long descriptors	CY 2016 OPPS SI	CY 2016 OPPS APC	CY 2016 OPPS payment rate	Final CY 2017 OPPS SI	Final CY 2017 OPPS APC	Final CY 2017 OPPS payment rate
C9739	Cystourethroscopy, with insertion of transprostatic implant; 1 to 3 implants.	J1	5375	$3,393.73	J1	5375	$3,482.54

TABLE 23—FINAL CY 2017 STATUS INDICATOR (SI), APC ASSIGNMENTS AND PAYMENT RATES FOR THE TRANSPROSTATIC URETHRAL IMPLANT PROCEDURES—Continued

CPT/HCPCS code	Long descriptors	CY 2016 OPPS SI	CY 2016 OPPS APC	CY 2016 OPPS payment rate	Final CY 2017 OPPS SI	Final CY 2017 OPPS APC	Final CY 2017 OPPS payment rate
C9740	Cystourethroscopy, with insertion of transprostatic implant; 4 or more implants.	T	1565	5,250.00	J1	5376	7,449.52
52441	Cystourethroscopy, with insertion of permanent adjustable transprostatic implant; single implant.	B	N/A	N/A	B	N/A	N/A
52442	Cystourethroscopy, with insertion of permanent adjustable transprostatic implant; each additional permanent adjustable transprostatic implant (list separately in addition to code for primary procedure).	B	N/A	N/A	B	N/A	N/A

9. Other Procedures and Services

a. Cryoablation Procedures (APCs 5114, 5361, 5362, and 5432)

As part of our standard annual OPPS update process, we review each APC assignment for the clinical similarity and resource homogeneity of the procedures assigned to each APC. Based on our analysis of the hospital outpatient claims data used for the proposed rule, we made some modifications to the APC assignments of certain cryoablation procedures. Specifically, for the CY 2017 OPPS update, we proposed to delete APC 5352 (Level 2 Percutaneous Abdominal/Biliary Procedures and Related Procedures), and reassign the cryoablation procedures that were previously assigned to this APC to APC 5361 (Level 1 Laparoscopy and Related Services). As shown in Table 24 below, and as listed in Addendum B of the CY 2017 OPPS/ASC proposed rule, we proposed to reassign CPT codes 20983, 47383, 50593, and 0340T from APC 5352 to APC 5361. Through our continuing efforts to simplify the APCs through consolidation and to improve clinical and resource homogeneity for the APCs, we believe that these cryoablation procedures that were previously assigned to APC 5352 would be more appropriately assigned to APC 5361 based on their geometric mean costs for the CY 2017 OPPS update. Further, we believe that the proposed revision appropriately categorized these cryoablation procedures in APC 5361 based on clinical coherence and resource costs compared to the other procedures in the same APC.

TABLE 24—PROPOSED CY 2017 STATUS INDICATORS (SI), APC ASSIGNMENTS, AND PAYMENT RATES FOR CERTAIN CRYOABLATION PROCEDURES

CPT/HCPCS code	Long descriptors	CY 2016 OPPS SI	CY 2016 OPPS APC	CY 2016 OPPS payment rate	Proposed CY 2017 OPPS SI	Proposed CY 2017 OPPS APC	Proposed CY 2017 OPPS payment rate
20983	Ablation therapy for reduction or eradication of 1 or more bone tumors (*e.g.,* metastasis) including adjacent soft tissue when involved by tumor extension, percutaneous, including imaging guidance when performed; cryoablation.	T	5352	$4,118.23	J1	5361	$4,178.33
47383	Ablation, 1 or more liver tumor(s), percutaneous, cryoablation.	T	5352	4,118.23	J1	5361	4,178.33
50593	Ablation, renal tumor(s), unilateral, percutaneous, cryotherapy.	T	5352	4,118.23	J1	5361	4,178.33
0340T	Ablation, pulmonary tumor(s), including pleura or chest wall when involved by tumor extension, percutaneous, cryoablation, unilateral, includes imaging guidance.	T	5352	4,118.23	J1	5361	4,178.33
0440T	Ablation, percutaneous, cryoablation, includes imaging guidance; upper extremity distal/peripheral nerve.	J1	5361	4,001.15	J1	5361	4,178.33
0441T	Ablation, percutaneous, cryoablation, includes imaging guidance; lower extremity distal/peripheral nerve.	J1	5361	4,001.15	J1	5361	4,178.33

TABLE 24—PROPOSED CY 2017 STATUS INDICATORS (SI), APC ASSIGNMENTS, AND PAYMENT RATES FOR CERTAIN CRYOABLATION PROCEDURES—Continued

CPT/HCPCS code	Long descriptors	CY 2016 OPPS SI	CY 2016 OPPS APC	CY 2016 OPPS payment rate	Proposed CY 2017 OPPS SI	Proposed CY 2017 OPPS APC	Proposed CY 2017 OPPS payment rate
0442T	Ablation, percutaneous, cryoablation, includes imaging guidance; nerve plexus or other truncal nerve (*e.g.,* brachial plexus, pudendal nerve).	T	5352	4,118.23	J1	5361	4,178.33

Comment: One commenter expressed concern with the proposed assignment of the kidney, lung, liver, bone and nerve cryoablation procedures, specifically, the procedure codes listed in Table 24, to APC 5361. The commenter stated that APC 5361 does not appropriately reflect the clinical nature of the procedures and inadequately recognizes the resources needed to perform the services. The commenter further stated that reassigning the procedures previously assigned to APC 5361 results in a lack of clinical coherence because the APC would include various diagnostic and therapeutic procedures that consist of a wide range of anatomic systems with disparate costs. Consequently, the commenter urged CMS to reevaluate the APC assignments for the cryoablation procedures listed in Table 24, and suggested that CMS either create a new APC that includes both the cryoablation and radiofrequency ablation procedures, or reassign the procedures to APCs that groups the ablation procedures with other clinically similar procedures.

Response: We reviewed the updated CY 2015 hospital outpatient claims data used for this final rule with comment period. Based on our review, we agree with the commenter that some of these procedures should be reassigned to more appropriate APCs. First, although we have no claims data for CPT codes 0440T, 0441T, and 0442T because these codes are new for CY 2016, we believe that these procedures more appropriately align, based on clinical characteristics, with the procedures in APC 5432 (Level 2 Nerve Procedures). Therefore, we are reassigning CPT codes 0440T, 0441T, and 0442T to APC 5432 for CY 2017. Secondly, based on our analysis, we found a geometric mean of approximately $5,416 for CPT code 20983 based on 98 single claims (out of 100 total claims), which is similar to the geometric mean of approximately $5,367 for APC 5114. Therefore, we are reassigning CPT code 20983 to APC 5114. In addition, we found a geometric mean cost of approximately $5,944 for CPT code 50593 based on 1,811 single claims (out of 1,823 total claims). Furthermore, a high percentage of CPT code 50593 cases were complexity adjusted to APC 5362 in the proposed rule. Given that the geometric mean cost of CPT code 50593 is at the very top of the geometric mean cost range for APC 5361 and the need for a complexity adjustment for many of the cases into APC 5362, we are reassigning CPT code 50593 to APC 5362 for CY 2017. In addition, our analysis of the final rule with comment period data showed a geometric mean costs for CPT codes 0340T (approximately $5,519) and 47383 (approximately $5,178) indicates that the proposed rule assignment to APC 5361 for these cryoablation procedures is appropriate because their geometric mean costs are closer to the geometric mean cost of APC 5361 (approximately $4,316) than to the geometric mean cost of APC 5362 (approximately $7,164).

After consideration of the public comment we received, we are adopting as final, without modification, the proposal to assign CPT codes 0340T and 47383 to APC 5361. However, we are modifying our proposal and reassigning CPT codes 0440T, 0441T, 0442T, 20983, and 50593 to the final APCs listed in Table 25 below. Table 25 shows the final status indicator, APC assignments, and payment rates for the cryoablation procedures for CY 2017. We refer readers to Addendum B of this final rule with comment period for the payment rates for all codes reportable under the OPPS. Addendum B is available via the Internet on the CMS Web site.

TABLE 25—FINAL CY 2017 STATUS INDICATOR (SI), APC ASSIGNMENTS, AND PAYMENT RATES FOR CERTAIN CRYOABLATION PROCEDURES

CPT/HCPCS code	Long descriptors	CY 2016 OPPS SI	CY 2016 OPPS APC	CY 2016 OPPS payment rate	Final CY 2017 OPPS SI	Final CY 2017 OPPS APC	Final CY 2017 OPPS payment rate
20983	Ablation therapy for reduction or eradication of 1 or more bone tumors (*e.g.,* metastasis) including adjacent soft tissue when involved by tumor extension, percutaneous, including imaging guidance when performed; cryoablation.	T	5352	$4,118.23	J1	5114	$5,219.36
47383	Ablation, 1 or more liver tumor(s), percutaneous, cryoablation.	T	5352	4,118.23	J1	5361	4,197.36
50593	Ablation, renal tumor(s), unilateral, percutaneous, cryotherapy.	T	5352	4,118.23	J1	5362	6,966.89

TABLE 25—FINAL CY 2017 STATUS INDICATOR (SI), APC ASSIGNMENTS, AND PAYMENT RATES FOR CERTAIN CRYOABLATION PROCEDURES—Continued

CPT/HCPCS code	Long descriptors	CY 2016 OPPS SI	CY 2016 OPPS APC	CY 2016 OPPS payment rate	Final CY 2017 OPPS SI	Final CY 2017 OPPS APC	Final CY 2017 OPPS payment rate
0340T	Ablation, pulmonary tumor(s), including pleura or chest wall when involved by tumor extension, percutaneous, cryoablation, unilateral, includes imaging guidance.	T	5352	4,118.23	J1	5361	4,197.36
0440T	Ablation, percutaneous, cryoablation, includes imaging guidance; upper extremity distal/peripheral nerve.	J1	5361	4,001.15	J1	5432	4,150.11
0441T	Ablation, percutaneous, cryoablation, includes imaging guidance; lower extremity distal/peripheral nerve.	J1	5361	4,001.15	J1	5432	4,150.11
0442T	Ablation, percutaneous, cryoablation, includes imaging guidance; nerve plexus or other truncal nerve (*e.g.,* brachial plexus, pudendal nerve).	T	5352	4,118.23	J1	5432	4,150.11

b. Comprehensive Dialysis Circuit Procedures (APCs 5181, 5192, and 5193)

For CY 2017, the AMA CPT Editorial Panel deleted CPT codes 36147 and 36148 and replaced them with nine new codes, effective January 1, 2017. Table 26 below list the complete descriptors for the deleted and replacement codes. We note that the deleted and replacement codes were listed in Addendum B and Addendum O to the CY 2017 OPPS/ASC proposed rule. Addendum B listed the proposed status indicator assignments for the replacement codes and assigned them to comment indicator ''NP'' (New code for the next calendar year or existing code with substantial revision to its code descriptor in the next calendar year as compared to current calendar year, proposed APC assignment; comments will be accepted on the proposed APC assignment for the new code.), while Addendum O listed the placeholder/proposed CY 2017 CPT codes and their long descriptors.

TABLE 26—CODING CHANGES FOR THE DIALYSIS CIRCUIT PROCEDURES EFFECTIVE JANUARY 1, 2017

Placeholder/proposed CY 2017 CPT code	Final CY 2017 CPT code	Long descriptors
36147	36147	Introduction of needle and/or catheter, arteriovenous shunt created for dialysis (graft/fistula); initial access with complete radiological evaluation of dialysis access, including fluoroscopy, image documentation and report (includes access of shunt, injection[s] of contrast, and all necessary imaging from the arterial anastomosis and adjacent artery through entire venous outflow including the inferior or superior vena cava.
36148	36148	Introduction of needle and/or catheter, arteriovenous shunt created for dialysis (graft/fistula); additional access for therapeutic intervention (list separately in addition to code for primary procedure).
369X1	36901	Introduction of needle(s) and/or catheter(s), dialysis circuit, with diagnostic angiography of the dialysis circuit, including all direct puncture(s) and catheter placement(s), injection(s) of contrast, all necessary imaging from the arterial anastomosis and adjacent artery through entire venous outflow including the inferior or superior vena cava, fluoroscopic guidance, radiological supervision and interpretation and image documentation and report.
369X2	36902	Introduction of needle(s) and/or catheter(s), dialysis circuit, with diagnostic angiography of the dialysis circuit, including all direct puncture(s) and catheter placement(s), injection(s) of contrast, all necessary imaging from the arterial anastomosis and adjacent artery through entire venous outflow including the inferior or superior vena cava, fluoroscopic guidance, radiological supervision and interpretation and image documentation and report; with transluminal balloon angioplasty, peripheral dialysis segment, including all imaging and radiological supervision and interpretation necessary to perform the angioplasty.
369X3	36903	Introduction of needle(s) and/or catheter(s), dialysis circuit, with diagnostic angiography of the dialysis circuit, including all direct puncture(s) and catheter placement(s), injection(s) of contrast, all necessary imaging from the arterial anastomosis and adjacent artery through entire venous outflow including the inferior or superior vena cava, fluoroscopic guidance, radiological supervision and interpretation and image documentation and report; with transcatheter placement of intravascular stent(s) peripheral dialysis segment, including all imaging and radiological supervision and interpretation necessary to perform the stenting, and all angioplasty within the peripheral dialysis segment.
369X4	36904	Percutaneous transluminal mechanical thrombectomy and/or infusion for thrombolysis, dialysis circuit, any method, including all imaging and radiological supervision and interpretation, diagnostic angiography, fluoroscopic guidance, catheter placement(s), and intraprocedural pharmacological thrombolytic injection(s).

TABLE 26—CODING CHANGES FOR THE DIALYSIS CIRCUIT PROCEDURES EFFECTIVE JANUARY 1, 2017—Continued

Placeholder/ proposed CY 2017 CPT code	Final CY 2017 CPT code	Long descriptors
369X5	36905	Percutaneous transluminal mechanical thrombectomy and/or infusion for thrombolysis, dialysis circuit, any method, including all imaging and radiological supervision and interpretation, diagnostic angiography, fluoroscopic guidance, catheter placement(s), and intraprocedural pharmacological thrombolytic injection(s); with transluminal balloon angioplasty, peripheral dialysis segment, including all imaging and radiological supervision and interpretation necessary to perform the angioplasty.
369X6	36906	Percutaneous transluminal mechanical thrombectomy and/or infusion for thrombolysis, dialysis circuit, any method, including all imaging and radiological supervision and interpretation, diagnostic angiography, fluoroscopic guidance, catheter placement(s), and intraprocedural pharmacological thrombolytic injection(s); with transcatheter placement of an intravascular stent(s), peripheral dialysis segment, including all imaging and radiological supervision and interpretation necessary to perform the stenting, and all angioplasty within the peripheral dialysis circuit.
369X7	36907	Transluminal balloon angioplasty, central dialysis segment, performed through dialysis circuit, including all imaging and radiological supervision and interpretation required to perform the angioplasty (List separately in addition to code for primary procedure).
369X8	36908	Transcatheter placement of an intravascular stent(s), central dialysis segment, performed through dialysis circuit, including all imaging radiological supervision and interpretation required to perform the stenting, and all angioplasty in the central dialysis segment (List separately in addition to code for primary procedure).
369X9	36909	Dialysis circuit permanent vascular embolization or occlusion (including main circuit or any accessory veins), endovascular, including all imaging and radiological supervision and interpretation necessary to complete the intervention (List separately in addition to code for primary procedure).

As shown in Table 27 below, and as listed in Addendum B of the CY 2017 OPPS/ASC proposed rule, we proposed to package payment for some of these new CY 2017 CPT codes and to also assign the procedures to APC 5181 (Level 1 Vascular Procedures), 5192 (Level 2 Endovascular Procedures), 5193 (Level 3 Endovascular Procedures), or 5194 (Level 2 Endovascular Procedures). Specifically, we proposed to assign CPT code 369X1 (CY 2017 CPT code 36901) to APC 5181, CPT codes 396X2 (CY 2017 CPT code 36902) and 369X4 (CY 2017 CPT code 36904) to APC 5192, CPT codes 396X3 (CY 2017 CPT code 36903) and 369X5 (CY 2017 CPT code 36905) to APC 5193, and CPT code 369X6 (CY 2017 CPT code 36906) to APC 5194. In addition, we proposed to assign CPT codes 369X7 (CY 2017 CPT code 36907), 369X8 (CY 2017 CPT code 36908), and 369X9 (CY 2017 CPT code 36909) to status indicator ''N'' (Items and Services Packaged into APC Rates) to indicate that these service are paid under OPPS. However, their payment is packaged into the payment for other services.

TABLE 27—PROPOSED CY 2017 STATUS INDICATOR (SI), APC ASSIGNMENTS, AND PAYMENT RATES FOR THE DIALYSIS CIRCUIT PROCEDURES

Proposed CY 2017 CPT code	CY 2017 CPT code	Short descriptors	CY 2016 OPPS SI	CY 2016 OPPS APC	CY 2016 OPPS payment rate	Proposed CY 2017 OPPS SI	Proposed CY 2017 OPPS APC	Proposed CY 2017 OPPS payment rate
36147	36147	Access av dial grft for eval	T	5181	*$862.51	D	N/A	N/A
36148	36148	Access av dial grft for proc	N	N/A	N/A	D	N/A	N/A
369X1	36901	Intro cath dialysis circuit	N/A	N/A	N/A	T	5181	$867.68
369X2	36902	Intro cath dialysis circuit	N/A	N/A	N/A	J1	5192	4,800.45
369X3	36903	Intro cath dialysis circuit	N/A	N/A	N/A	J1	5193	9,726.54
369X4	36904	Thrmbc/nfs dialysis circuit	N/A	N/A	N/A	J1	5192	4,800.45
369X5	36905	Thrmbc/nfs dialysis circuit	N/A	N/A	N/A	J1	5193	9,726.54
369X6	36906	Thrmbc/nfs dialysis circuit	N/A	N/A	N/A	J1	5194	14,511.21
369X7	36907	Balo angiop ctr dialysis seg	N/A	N/A	N/A	N	N/A	N/A
369X8	36908	Stent plmt ctr dialysis seg	N/A	N/A	N/A	N	N/A	N/A
369X9	36909	Dialysis circuit embolj	N/A	N/A	N/A	N	N/A	N/A

Comment: One commenter agreed with the proposed APC assignments for CPT codes 36902, 36903, 36905, and 36906, and requested that CMS finalize the proposal. However, this commenter disagreed with the proposed APC assignment for CPT code 36904 and the proposed status indicator assignment for CPT codes 36907, 36908, and 36909. In particular, the commenter believed that the proposed assignment of APC 5192 fails to reflect the clinical complexity and resource costs associated with performing the procedure described by CPT code 36904. The commenter recommended that CMS assign CPT code 36904 to APC 5193 based on its clinical and resource homogeneity to the other procedures in this APC. In addition, the commenter disagreed with the packaging of payment for services described by CPT codes 36907, 36908, and 36909 because these procedures involve substantial device costs. As an interim measure, the commenter recommended that the procedure codes be assigned to New Technology APC 1564 (New Technology—Level 27 ($4501-$5000), with a status indicator of ''S'' (Procedure or Service, Not Discounted When Multiple. Paid under OPPS; separate APC payment.), until sufficient claims data is available on which to base assignment of the new codes to a more appropriate clinical APC. If CMS continued to believe that

the New Technology APC assignment is inappropriate, the commenter urged CMS to create a composite APC for the dialysis circuit CPT codes.

Response: We appreciate the commenter's support for the proposed APC assignments for CPT codes 36902, 36903, 36905, and 36906. We are finalizing our proposal for these codes. However, with respect to the proposed assignment of CPT code 36904, we believe that, based on its similarity to the other procedures in APC 5192, and a comparison to other codes in this series we believe that APC 5192 is the most appropriate APC for this procedure. In addition, because CPT codes 36907, 36908, and 36909 are add-on codes, we assigned these codes to a status indicator that indicates packaged payment status. Because of our packaging policy for add-on codes, we would not consider these codes for a composite APC. We note that since January 1, 2014, payment for services described by add-on codes have been packaged under the hospital OPPS. As we do every year for all items and services under OPPS, we will reevaluate the APC assignments for these services in the CY 2018 OPPS rulemaking.

In summary, after consideration of the public comment received, we are finalizing our proposal, without modification, to assign the dialysis circuit procedures to the APC and status indicators listed in Table 28 below. Table 28 shows the final status indicator, APC assignments, and payment rates for the dialysis circuit services for CY 2017. We refer readers to Addendum B of this final rule with comment period for the payment rates for all codes reportable under the OPPS. Addendum B is available via the Internet on the CMS Web site.

TABLE 28—FINAL CY 2017 STATUS INDICATOR (SI), APC ASSIGNMENTS, AND PAYMENT RATES FOR THE DIALYSIS CIRCUIT PROCEDURES

Proposed CY 2017 CPT code	Final CY 2017 CPT code	Short descriptors	CY 2016 OPPS SI	CY 2016 OPPS APC	CY 2016 OPPS payment rate	Final CY 2017 OPPS SI	Final CY 2017 OPPS APC	Final CY 2017 OPPS payment rate
36147	36147	Access av dial grft for eval	T	5181	$862.51	D		
36148	36148	Access av dial grft for proc	N			D		
369X1	36901	Intro cath dialysis circuit				T	5181	$683.84
369X2	36902	Intro cath dialysis circuit				J1	5192	4,823.16
369X3	36903	Intro cath dialysis circuit				J1	5193	9,748.31
369X4	36904	Thrmbc/nfs dialysis circuit				J1	5192	4,823.16
369X5	36905	Thrmbc/nfs dialysis circuit				J1	5193	9,748.31
369X6	36906	Thrmbc/nfs dialysis circuit				J1	5194	14,775.90
369X7	36907	Balo angiop ctr dialysis seg				N	N/A	N/A
369X8	36908	Stent plmt ctr dialysis seg				N	N/A	N/A
369X9	36909	Dialysis circuit embolj				N	N/A	N/A

c. Blood Product Exchange and Related Services (APCs 5241 and 5242)

For CY 2017, we proposed to assign CPT code 36456 (Partial exchange transfusion, blood, plasma or crystalloid necessitating the skill of a physician or other qualified health care professional, newborn) (described as code 364X1 in the proposed rule) to APC 5241 (Level 1 Blood Product Exchange and Related Services), with a proposed mean geometric mean cost of approximately $364.

Comment: One commenter disagreed with the CMS proposal to assign CPT code 36456 to APC 5241. The commenter stated that APC 5182 (Level 2 Vascular Procedures) is a more appropriate APC assignment because of the clinical similarity and similar resource intensity to other services assigned to APC 5182.

Response: We disagree with the commenter's statement. We do not believe that the procedure described by CPT code 36456 is comparable to the services in APC 5182 in terms of resource intensity or clinical similarity. We do believe that CPT code 36456 is similar to the other services assigned to APC 5241, such as CPT code 36450 (Exchange transfusion, blood; newborn). When claims data become available for this new code, we will consider if assignment to another APC is appropriate. After consideration of the public comment we received, we are finalizing our proposal to assign CPT code 36456 to APC 5241.

Comment: For CY 2017, we proposed to assign CPT codes 38230 (Bone marrow harvesting for transplantation; allogeneic), 38241 (Hematopoietic progenitor cell (HPC); autologous transplantation, 38242 (Allogeneic lymphocyte infusions) and 38243 (HPC Boost) to APC 5242 (Level 2 Blood Product Exchange and Related Services). This APC has a proposed CY 2017 geometric mean cost of approximately $1,129. One commenter stated that the proposed payment rate of approximately $1,078 for this APC was a 66 percent decrease in payment from the final CY 2016 payment rate. The commenter also noted that the services in this APC were not likely to be submitted on a single procedure claim and, as a result, the CMS ratesetting methodology may be based on incorrectly coded claims. In addition, the commenter requested that CMS consider the use of C–APCs to provide for payment for low-volume, clinically significant services.

Response: The commenter is correct that each of these services represent a low volume in the OPPS. The geometric mean cost for each of the codes is within the geometric mean cost range ($1,111 to $1,518) for significant services assigned to APC 5242. We will monitor these claims and determine if any future adjustment to the methodology (such as the C–APC methodology) would be more appropriate.

d. Magnetic Resonance-Guided Focused Ultrasound Surgery (MRgFUS) (APCs 1537, 5114, and 5414)

Currently, there are four CPT/HCPCS codes that describe magnetic resonance image guided high intensity focused ultrasound (MRgFUS) procedures. These codes include CPT codes 0071T, 0072T, and 0398T, and HCPCS code C9734. CPT codes 0071T and 0072T are used for the treatment of uterine fibroids, CPT code 0398T is used for the treatment of essential tremor, and HCPCS code C9734 is used for pain palliation for metastatic bone cancer.

As shown in Table 29 below, and as listed in Addendum B of the CY 2017 OPPS/ASC proposed rule, we proposed to continue to assign CPT codes 0071T and 0072T to APC 5414, with a payment

rate of approximately $2,074. We also proposed to reassign the APC's status indicator to ''J1'' (Hospital Part B services paid through a comprehensive APC) to indicate that all covered Part B services on the claim are packaged with the payment for the primary ''J1'' service for the claim, except for services assigned to OPPS status indicator ''F,'' ''G,'' ''H,'' ''L'' and ''U''; ambulance services; diagnostic and screening mammography; all preventive services; and certain Part B inpatient services. In addition, we proposed to reassign HCPCS code C9734 from APC 5122 (Level 2 Musculoskeletal Procedures) to APC 5114 (Level 4 Musculoskeletal Procedures), with a payment rate of approximately $5,199. We also proposed to reassign the HCPCS code's status indicator from ''T'' to ''J1.''

Further, we proposed to reassign CPT code 0398T from a nonpayable status indicator, specifically, ''E'' (Not paid by Medicare when submitted on outpatient claims (any outpatient bill type)) to a separately payable APC, specifically, APC 5462 (Level 2 Neurostimulator and Related Procedures), with a payment rate of approximately $5,840. We note that APC 5462 is assigned to status indicator ''J1.'' This APC assignment was based on a comparison to a similar procedure, specifically, HCPCS code C9734, with a geometric mean cost of approximately $8,565 based on 9 single claims (out of 9 total claims). The MRgFUS equipment used in the performance of the procedure described by CPT code 0398T is very similar to the MRgFUS equipment used in the performance of the procedure described by HCPCS code C9734. Both machines are manufactured by the same manufacturer.

TABLE 29—PROPOSED CY 2017 STATUS INDICATOR (SI), APC ASSIGNMENTS, AND PAYMENT RATES FOR THE MAGNETIC RESONANCE IMAGE GUIDED HIGH INTENSITY FOCUSED ULTRASOUND (MRgFUS) PROCEDURES

CPT/HCPCS code	Long descriptor	CY 2016 OPPS SI	CY 2016 OPPS APC	CY 2016 OPPS payment rate	Proposed CY 2017 OPPS SI	Proposed CY 2017 OPPS APC	Proposed CY 2017 OPPS payment rate
0071T	Focused ultrasound ablation of uterine leiomyomata, including mr guidance; total leiomyomata volume less than 200 cc of tissue.	T	5414	$1,861.18	J1	5414	$2,074.22
0072T	Focused ultrasound ablation of uterine leiomyomata, including mr guidance; total leiomyomata volume greater or equal to 200 cc of tissue.	T	5414	1,861.18	J1	5414	2,074.22
0398T	Magnetic resonance image guided high intensity focused ultrasound (mrgfus), stereotactic ablation lesion, intracranial for movement disorder including stereotactic navigation and frame placement when performed.	E	N/A	N/A	J1	5462	5,839.83
C9734	Focused ultrasound ablation/therapeutic intervention, other than uterine leiomyomata, with magnetic resonance (mr) guidance.	T	5122	2,395.59	J1	5114	5,199.03

Comment: All of the commenters disagreed with the proposed assignment of CPT code 0398T to APC 5462 for CY 2017. The commenters stated that the proposed payment severely underestimates the resources required to provide the treatment. Some commenters indicated that compared to HCPCS code C9734, which requires only one physician and 3 hours of MRI time, the resources for CPT code 0398T is significantly greater and requires the services of a multidisciplinary staff (including a neurosurgeon and a radiologist), as well as 6 hours of MRI time. Several commenters indicated that MRgFUS for essential tremor is a better alternative to deep brain stimulation (DBS) because there is no risk of infection or implanted hardware, no need for multiple hospital outpatient visits or postoperative programming sessions, and lower cost because there is no battery to surgically remove and replace every few years. Some commenters pointed out that the cost of providing a DBS procedure is between $40,000 and $50,000, while the MRgFUS procedure costs approximately $20,000. One commenter stated that the capital equipment used in the performance of the procedure described by CPT code 0398T is more costly, at approximately $2 million, compared to the capital equipment used in the performance of the procedure described by HCPCS C9734, which is approximately $750,000. The commenter also stated that CPT code 0398T uses additional equipment (for example, stereotactic head frame) and supplies resulting in higher costs for the procedure. Several commenters expressed concern that the proposed payment for CPT code 0398T is inadequate to cover the hospital cost of providing the service and recommended that CMS reassign CPT code 0398T to either a more appropriate APC that reflects the cost of providing the treatment, or to APC 5463 (Level 3 Neurostimulator and Related Procedures). Some commenters suggested that a low reimbursement rate for the procedure could jeopardize Medicare access to this emerging technology.

Response: CPT code 0398T is a new code for CY 2016. Therefore, we do not have available claims data for the CY 2017 ratesetting. HCPCS code C9734 describes a similar service that uses the same MRgFUS technology, and as noted above, has a geometric mean cost of $8,565. However, the manufacturer has indicated that the essential tremor MRgFUS service uses a more costly version of the MRgFUS equipment, takes longer, and uses some additional supplies and equipment, which makes the procedure described by CPT code 0398T more costly than the procedure described by HCPCS code C9734. We believe that the procedure described by CPT code 0398T can also be compared

to the procedure described by CPT code 77371 (Radiation treatment delivery, stereotactic radiosurgery (SRS), complete course of treatment of cranial lesions(s) consisting of 1 session; multi-source Cobalt-60 based). In particular, both procedures use capital equipment of approximately equal cost, both employ a stereotactic head frame to treat intracranial lesions, and both require similar staffing. CPT code 77371 is assigned to APC 5627 (Level 7 Radiation Therapy), with a final payment rate of approximately $7,453. The final geometric mean cost of CPT code 77371 is $10,105. We believe that the geometric mean cost of CPT code 77371 provides an indication of the initial payment rate for CPT code 0398T relative to the related service described by HCPCS code C9734, for which we have some claims data. Consequently, because there is no clinical APC that contains clinically similar and resource-cost similar services, we believe that the most appropriate initial assignment for CPT code 0398T is APC 1537 (New Technology—Level 37 ($9501-$10000)), which has a final payment rate of approximately $9,751. The assignment to APC 1537 will result in a 67-percent increase in the CY 2017 payment rate compared to the $5,840 proposed payment rate. It is also significantly above the payment rate of approximately $5,219 for HCPCS code C9734, to which CPT code 0398T is comparable but according to the commenters is more costly.

Finally, we remind hospitals that, as we do every year, we review the APC assignments for all services and items paid under the OPPS. We will reevaluate the APC assignment for CPT code 0398T once we have claims data for this service.

Comment: One commenter supported CMS' proposal to reassign HCPCS code C9734 to APC 5114, and requested that CMS finalize the proposal.

Response: We appreciate the commenter's support.

After consideration of the public comments we received, we are modifying our proposal and reassigning CPT code 0398T to APC 1537 for CY 2017. In addition, we are finalizing our proposal, without modification, to reassign HCPCS code C9734 to APC 5114. Because we did not receive any public comments related to CPT codes 0071T and 0072T, we are finalizing our proposal, without modification, to continue to assign these codes to APC 5414. Table 30 below shows the final status indicator and APC assignments and payment rates for the MRgFUS procedures for CY 2017. We refer readers to Addendum B of this final rule with comment period for the payment rates for all codes reportable under the OPPS. Addendum B is available via the Internet on the CMS Web site.

TABLE 30—FINAL CY 2017 STATUS INDICATOR (SI), APC ASSIGNMENTS, AND PAYMENT RATES FOR THE MAGNETIC RESONANCE IMAGE GUIDED HIGH INTENSITY FOCUSED ULTRASOUND (MRgFUS) PROCEDURES

CPT/HCPCS code	Long descriptors	CY 2016 OPPS SI	CY 2016 OPPS APC	CY 2016 OPPS payment rate	Final CY 2017 OPPS SI	Final CY 2017 OPPS APC	Final CY 2017 OPPS payment rate
0071T	Focused ultrasound ablation of uterine leiomyomata, including mr guidance; total leiomyomata volume less than 200 cc of tissue.	T	5414	$1,861.18	J1	5414	$2,084.59
0072T	Focused ultrasound ablation of uterine leiomyomata, including mr guidance; total leiomyomata volume greater or equal to 200 cc of tissue.	T	5414	1,861.18	J1	5414	2,084.59
0398T	Magnetic resonance image guided high intensity focused ultrasound (mrgfus), stereotactic ablation lesion, intracranial for movement disorder including stereotactic navigation and frame placement when performed.	E	N/A	N/A	S	1537	9,750.50
C9734	Focused ultrasound ablation/therapeutic intervention, other than uterine leiomyomata, with magnetic resonance (mr) guidance.	T	5122	2,395.59	J1	5114	5,219.36

e. Neulasta® On-Body Injector

As listed in Addendum B of the CY 2017 OPPS/ASC proposed rule, we proposed to assign new CY 2017 CPT code 96377 (Application of on-body injector (includes cannula insertion) for timed subcutaneous injection) to status indicator ''N'' (Items and Services Packaged into APC Rates) to indicate that the service is paid under OPPS; however, its payment is packaged into the payment for other services. We note that CPT code 93677 was listed as placeholder CPT code 963XX in both Addendum B and O of the CY 2017 OPPS/ASC proposed rule. Addendum B listed the short descriptor with the proposed status indicator of ''N,'' while Addendum O listed the complete long descriptor under placeholder CPT code 963XX.

Comment: Some commenters disagreed with the proposed status indicator assignment of ''N'' for CPT code 963XX (CY 2017 CPT code 96377), and indicated that this is a primary service, not an add-on procedure, that represents a complete and unique drug administration service that a hospital performs for the subcutaneous administration of Neulasta® with the on-body injector. The commenters stated that the service is similar to the drug administration service described by CPT code 96372 (Therapeutic, prophylactic, or diagnostic injection (specify substance or drug); subcutaneous or intramuscular), which is assigned to APC 5692 (Level 2 Drug Administration) with a proposed payment rate of about $53. The commenters indicated that the difference between the procedure described by CPT code 96372 and CPT

code 96377 is the use of an on-body injector for CPT code 96377.

Response: We do not believe that the resources necessary to deliver the Neulasta® service warrants separate payment under the OPPS. Because payment for CPT code 96377 will be packaged, the payment for use of the on-body injector will be included in the payment for the primary service (for example, chemotherapy administration, clinic visit, among others) that is reported in conjunction with CPT code 96377. Furthermore, we believe that the packaged payment that includes payment for the use of the Neulasta® on-body injector adequately covers the costs of the service. After consideration of the public comments we received, we are adopting as final, without modification, the proposal to assign CPT code 96377 to status indicator ''N'' for CY 2017.

f. Smoking and Tobacco Use Cessation Counseling (APC 5821)

As shown in Table 31 below, and as listed in Addendum B of the CY 2017 OPPS/ASC proposed rule, we proposed to continue to assign CPT codes 99406 and 99407 to APC 5821 (Level 1 Health and Behavior Services), with a proposed payment rate of approximately $25. In addition, we proposed to delete HCPCS codes G0436 and G0437 because they were replaced with CPT codes 99406 and 99407. Specifically, we stated in the October 2016 Update, Change Request 9768, Transmittal 3602, dated August 26, 2016, that HCPCS codes G0436 and G0437 were deleted on September 30, 2016, because they were replaced with CPT codes 99406 and 99407, effective October 1, 2016.

TABLE 31—PROPOSED CY 2017 STATUS INDICATOR (SI), APC ASSIGNMENT, AND PAYMENT RATE FOR THE SMOKING AND TOBACCO USE CESSATION COUNSELING SERVICES

CPT/HCPCS code	Long descriptors	CY 2016 OPPS SI	CY 2016 OPPS APC	CY 2016 OPPS payment rate	Proposed CY 2017 OPPS SI	Proposed CY 2017 OPPS APC	Proposed CY 2017 OPPS payment rate
99406	Smoking and tobacco use cessation counseling visit; intermediate, greater than 3 minutes up to 10 minutes.	S	5821	$27.12	S	5821	$25.09
99407	Smoking and tobacco use cessation counseling visit; intensive, greater than 10 minutes.	S	5821	27.12	S	5821	25.09
G0436	Smoking and tobacco cessation counseling visit for the asymptomatic patient; intermediate, greater than 3 minutes, up to 10 minutes.	S	5821	27.12	D		
G0437	Smoking and tobacco cessation counseling visit for the asymptomatic patient; intensive, greater than 10 minutes.	S	5822	69.65	D		

Comment: One commenter expressed concern that the proposed payment rate for APC 5821 did not include the costs associated with HCPCS code G0437 because it was previously assigned to APC 5822. The commenter requested that CMS reevaluate the payment rate for APC 5821 and to include the claims data associated with HCPCS code G0437 in the calculation of the geometric mean cost for APC 5821. In addition, because the predecessor HCPCS code G0437 was previously assigned to APC 5822, the commenter believed that CPT code 99407 should also be assigned to the same APC. Moreover, the commenter urged CMS to crosswalk all deleted codes to the same APC assignment as their replacement codes when calculating APC payment rates during the transition.

Response: While we generally crosswalk the APC assignment of deleted codes to the same APC as its replacement code, we acknowledge that our calculation of the geometric mean cost for APC 5821 in the CY 2017 OPPS/ASC proposed rule did not include costs associated with HCPCS code G0437. We appreciate the commenter bringing this to our attention and have corrected this oversight in this final rule with comment period. In particular, we are assigning CPT codes 99406 and 99407, and HCPCS codes G0436 and G0437 to APC 5821 and are using the geometric mean costs of these procedures in determining the final payment rate for APC 5821. Based on our analysis of the updated claims data for this final rule with comment period, the geometric mean cost of approximately $32 for CPT code 99407 based on 2,859 single claims (out of 4,148 total claims) is relatively similar to the geometric mean cost of approximately $26 for APC 5821. We do not agree with the commenter that CPT code 99407 should be assigned to APC 5822 because its geometric mean cost of approximately $72 is more than twice the geometric mean cost of CPT code 94407. Therefore, based on the resource costs and similar characteristics to the other procedures within APC 5821, we believe that CPT code 99407 is more appropriately assigned to this APC.

Comment: One commenter expressed confusion regarding the reporting of CPT codes 99406 and 99407, and requested that CMS clarify whether these codes apply to both asymptomatic and symptomatic patients. The commenter noted that the descriptor of HCPCS codes G0436 and G0437 specifically described services for the asymptomatic patient. However, the commenter indicated that this distinction is not included in the code descriptors for CPT codes 99406 and 99407.

Response: While not explicit in their code descriptors, CPT codes 99406 and 99407 apply to both asymptomatic and symptomatic patients. We note that the more recent preventive service policy related to these codes can be found in section 210.4.1 (Counseling to Prevent Tobacco Use (Effective August 25, 2010)) of the Medicare National Coverage Determination Manual, which is can be viewed on the CMS Web site at: *https://www.cms.gov/Regulations-and-Guidance/Guidance/Manuals/downloads/ncd103c1_part4.pdf*, as well as on the Medicare Coverage Database Web site at: *https://www.cms.gov/medicare-coverage-database/details/medicare-coverage-document-details.aspx?MCDId=32*. After consideration of the public comments we received, we

are finalizing our proposal, without modification, to continue to assign CPT codes 99406 and 99407 to APC 5821 for CY 2017. Table 32 below shows the final status indicator, APC assignment, and payment rate for CPT codes 99406 and 99407 for CY 2017. We refer readers to Addendum B of this final rule with comment period for the payment rates for all codes reportable under the OPPS. Addendum B is available via the Internet on the CMS Web site.

TABLE 32—FINAL CY 2017 STATUS INDICATOR (SI), APC ASSIGNMENT, AND PAYMENT RATE FOR THE SMOKING AND TOBACCO USE CESSATION COUNSELING SERVICES

CPT/HCPCS code	Long descriptors	CY 2016 OPPS SI	CY 2016 OPPS APC	CY 2016 OPPS payment rate	Final CY 2017 OPPS SI	Final CY 2017 OPPS APC	Final CY 2017 OPPS payment rate
99406	Smoking and tobacco use cessation counseling visit; intermediate, greater than 3 minutes up to 10 minutes.	S	5821	$27.12	S	5821	$25.22
99407	Smoking and tobacco use cessation counseling visit; intensive, greater than 10 minutes.	S	5821	27.12	S	5821	25.22
G0436	Smoking and tobacco cessation counseling visit for the asymptomatic patient; intermediate, greater than 3 minutes, up to 10 minutes.	S	5821	27.12	D		
G0437	Smoking and tobacco cessation counseling visit for the asymptomatic patient; intensive, greater than 10 minutes.	S	5822	69.65	D		

g. Radiofrequency Ablation of Uterine Fibroids (APC 5362)

For CY 2017, the AMA CPT Editorial Panel deleted CPT code 0336T (Laparoscopy, surgical, ablation of uterine fibroid(s), including intraoperative ultrasound guidance and monitoring, radiofrequency) and replacing it with CPT code 58674 (Laparoscopy, surgical, ablation of uterine fibroid(s) including intraoperative ultrasound guidance and monitoring, radiofrequency), effective January 1, 2017. We proposed to assign CPT code 58674 to APC 5362 (Level 2 Laparoscopy and Related Services), which is the same APC assignment for the predecessor CPT code 0336T. We note that CPT code 58674 was listed as placeholder CPT code 585X1 in both Addendum B and O of the CY 2017 OPPS/ASC proposed rule. Addendum B listed the short descriptor with the proposed APC assignment and payment rate, while Addendum O listed the complete long descriptor under placeholder CPT code 585X1. We note that both Addendum B and O also assigned this code to comment indicator ''NP'' to indicate that we would be accepting comments on the proposed APC assignment for the new code.

Comment: One commenter agreed with the proposed APC assignment for new CY 2017 CPT code 58674 to APC 5362 and stated that the assignment is consistent with the APC assignment for its predecessor code (CPT code 0336T). The commenter indicated that the resources required to furnish the service described by CPT code 58674 is similar to the resources of the other procedures assigned to APC 5362. Consequently, the commenter urged CMS to finalize the proposal.

Response: We appreciate the commenter's support. As noted by the commenter, we assigned new CY 2017 CPT code 58674 to APC 5362 based on its similarity to the other procedures within this APC.

After consideration of the public comment we received, we are finalizing our proposal, without modification, to assign CPT code 58674 to APC 5362. The final status indicator, APC assignment, and payment rate for CPT code 58674 can be found in Addendum B to this final rule with comment period (which is available via the Internet on the CMS Web site).

h. Intrapulmonary Surfactant Administration (APC 5791)

As listed in Addendum B of the CY 2017 OPPS/ASC proposed rule, we proposed to continue to assign CPT code 94610 (Intrapulmonary surfactant administration by a physician or other qualified health care professional through endotracheal tube) to APC 5791 (Pulmonary Treatment), with a proposed payment rate of approximately $161. We also proposed to continue to assign CPT code 94610 to OPPS status indicator ''Q1'' (STV-Packaged Codes) to indicate that the service is conditionally packaged.

Comment: One commenter disagreed with CMS' proposal to assign CPT code 94610 to OPPS status indicator ''Q1.'' The commenter indicated that this is a primary service, not an ancillary service as designated by the status indicator, and recommended that CMS reassign the CPT code to OPPS status indicator ''T'' (Procedure or Service, Multiple Procedure Reduction Applies. Paid under OPPS; separate APC payment).

Response: We believe that the commenter may have misunderstood the meaning of OPPS status indicator ''Q1.'' Assigning a procedure to OPPS status indicator ''Q1'' indicates that payment for the service is conditionally packaged under the OPPS. A criterion under the conditional packaging policy is that payment for a service is packaged when it is provided in combination with a significant procedure on the same date of service, but the service is separately paid when it is reported on the claim without a significant procedure. Addendum D1 to the CY 2017 OPPS/ASC proposed rule (which is available via the Internet on the CMS Web site) showed the definition of status indicator ''Q1.''

In the case of the procedure described by CPT code 94610, payment for this service is included in the payment for the significant procedure when it is reported in combination with HCPCS codes that are assigned to either status indicators ''S,'' ''T,'' or ''V.'' Alternatively, the service is separately paid when performed alone, or when reported in combination with HCPCS codes that described procedures assigned to a status indicator other than ''S,'' ''T,'' or ''V.'' In addition, assignment to OPPS status indicator

''Q1'' indicates that the service or procedure is assigned a composite APC payment when billed with specific combinations of services based on OPPS composite-specific payment criteria, and payment is packaged into a single payment for specific combinations of services. We disagree with the commenter that CPT code 94610 should be reassigned to OPPS status indicator ''T.'' Based on our understanding of the service, we believe that status indicator ''Q1'' is the most appropriate status indicator assignment for CPT code 94610 because the service is often provided in combination with other services on the same day.

After consideration of the public comment we received, we are finalizing our proposal, without modification, to continue to assign CPT code 94610 to APC 5791, and to assign status indicator ''Q1'' to the code for CY 2017. The complete list of the OPPS payment status indicators and their definitions for CY 2017 is displayed in Addendum D1 to this final rule with comment period, which is available on the CMS Web site at: *http://www.cms.gov/Medicare/Medicare-Fee-for-Service-Payment/HospitalOutpatientPPS/Hospital-Outpatient-Regulations-and-Notices.html*. Further, we refer readers to Addendum B of this final rule with comment period for the payment rates for all codes reportable under the OPPS. Addendum B is available via the Internet on the CMS Web site.

i. Non-Contact Low Frequency Ultrasound (NLFU) Therapy (APC 5051)

As listed in Addendum B of the CY 2017 OPPS/ASC proposed rule, we proposed to continue to assign CPT code 97610 (Low frequency, non-contact, non-thermal ultrasound, including topical application(s), when performed, wound assessment, and instruction(s) for ongoing care, per day) to APC 5051 (Level 1 Skin Procedures), with a proposed payment rate of approximately $154. In addition, we proposed to continue to assign CPT code 97610 to OPPS status indicator ''Q1'' (STV-Packaged Codes) to indicate that the service is conditionally packaged.

Comment: One commenter disagreed with CMS' proposal to assign CPT code 97610 to OPPS status indicator ''Q1.'' The commenter indicated that this is a primary service, not an ancillary service, and providers frequently perform NLFU therapy as a standalone, independent procedure. The commenter further stated that CMS' proposed OPPS status indicator assignment of ''Q1'' contradicts AMA's guidance in the June 2014 CPT Assistant, which clearly describes the service as a standalone procedure. The commenter recommended that CMS reassign CPT code 97610 to OPPS status indicator ''T'' (Procedure or Service, Multiple Procedure Reduction Applies. Paid under OPPS; separate APC payment.).

Response: Assigning CPT code 97610 to OPPS status indicator ''Q1'' indicates that payment for the service is conditionally packaged under the OPPS. A criterion under the conditional packaging policy is that payment for a service is packaged when it is provided in combination with a significant procedure on the same date of service, but the service is separately paid when it is reported on the claim without a significant procedure. Addendum D1 to the CY 2017 OPPS/ASC proposed rule (which is available via the Internet on the CMS Web site) showed the definition of status indicator ''Q1.''

We note that payment for the procedure described by CPT code 97610 is included in the payment for the significant procedure when it is reported in combination with HCPCS codes that are assigned to any of status indicators ''S,'' ''T,'' or ''V.'' Alternatively, the service is separately paid when performed alone, or when reported in combination with HCPCS codes that describe procedures assigned to a status indicator other than ''S,'' ''T,'' or ''V.'' In addition, assignment to OPPS status indicator ''Q1'' indicates that the service or procedure is assigned a composite APC payment if billed with specific combinations of services based on OPPS composite-specific payment criteria, and payment is packaged into a single payment for specific combinations of services. Based on our understanding of the service, we believe that ''Q1'' is the most appropriate status indicator assignment for CPT code 97610 because the service is provided in combination with other services on the same day.

After consideration of the public comment we received, we are finalizing our proposal, without modification, to continue to assign CPT code 97610 to APC 5051 and to assign CPT code 97610 to OPPS status indicator ''Q1'' for CY 2017. The complete list of the OPPS payment status indicators and their definitions for CY 2017 is displayed in Addendum D1 to this final rule with comment period, which is available on the CMS Web site at: *http://www.cms.gov/Medicare/Medicare-Fee-for-Service-Payment/HospitalOutpatientPPS/Hospital-Outpatient-Regulations-and-Notices.html*. Further, we refer readers to Addendum B of this final rule with comment period for the payment rates for all codes reportable under the OPPS. Addendum B is available via the Internet on the CMS Web site.

j. Pulmonary Rehabilitation Services (APCs 5732 and 5733)

Currently, there are four HCPCS codes that describe pulmonary rehabilitation services, specifically, HCPCS codes G0237, G0238, G0239, and G0424. As shown in Table 33 below and as listed in Addendum B of the CY 2017 OPPS/ASC proposed rule, we proposed to reassign these services to APCs 5734 (Level 4 Minor Procedures), 5735 (Level 5 Minor Procedures), and 5791 (Pulmonary Treatment). In addition, we proposed to continue their status indicator assignment of ''Q1'' to indicate that these services are conditionally packaged.

TABLE 33—PROPOSED CY 2017 STATUS INDICATOR (SI), APC ASSIGNMENTS, AND PAYMENT RATES FOR THE PULMONARY REHABILITATION SERVICES

HCPCS code	Long descriptors	CY 2016 OPPS SI	CY 2016 OPPS APC	CY 2016 OPPS payment	Proposed CY 2017 OPPS SI	Proposed CY 2017 OPPS APC	Proposed CY 2017 OPPS payment
G0237	Therapeutic procedures to increase strength or endurance of respiratory muscles, face to face, one on one, each 15 minutes (includes monitoring).	Q1	5734	$91.18	Q1	5735	$265.56

TABLE 33—PROPOSED CY 2017 STATUS INDICATOR (SI), APC ASSIGNMENTS, AND PAYMENT RATES FOR THE PULMONARY REHABILITATION SERVICES—Continued

HCPCS code	Long descriptors	CY 2016 OPPS SI	CY 2016 OPPS APC	CY 2016 OPPS payment	Proposed CY 2017 OPPS SI	Proposed CY 2017 OPPS APC	Proposed CY 2017 OPPS payment
G0238	Therapeutic procedures to improve respiratory function, other than described by g0237, one on one, face to face, per 15 minutes (includes monitoring).	Q1	5733	55.94	Q1	5791	161.29
G0239	Therapeutic procedures to improve respiratory function or increase strength or endurance of respiratory muscles, two or more individuals (includes monitoring).	Q1	5732	30.51	Q1	5734	95.66
G0424	Pulmonary rehabilitation, including exercise (includes monitoring), one hour, per session, up to two sessions per day.	Q1	5733	55.94	Q1	5791	161.29

Comment: Several commenters expressed concern with the proposed status indicator assignment of ''Q1'' for HCPCS code G0424. The commenters stated that Medicare's benefit categories for cardiac and pulmonary rehabilitation programs were codified in section 144 of the Medicare Improvements for Patients and Providers Act of 2008, which provides for payment and coverage of pulmonary and cardiac rehabilitation services. Because the payment for this service was established under a statutory provision, the commenters believed that CMS' proposed status indicator assignment of ''Q1'' for HCPCS code G0424 is an oversight. The commenters requested that CMS reconsider the issue and revise the status indicator assignment to ''S'' (Procedure or Service, Not Discounted When Multiple. Paid under OPPS; separate APC payment), similar to the status indicator assignment for the cardiac rehabilitation codes.

Response: We appreciate the commenters' feedback and agree, in part, with the commenters' concerns. Consequently, we believe that we should reassign HCPCS code G0424 to status indicator ''S.'' In addition, we believe that we should reassign HCPCS codes G0237, G0238, and G0239 to status indictor ''S'' because these codes also describe pulmonary rehabilitation services. However, the rationale for this modification of the proposal for these codes is not related to the statutory provision of section 144 of the Medicare Improvements for Patients and Providers Act of 2008. We believe that pulmonary rehabilitation is not typically ancillary to the other HOPD services that may be furnished to beneficiaries. Pulmonary rehabilitation is typically a course of treatment that is prescribed after a diagnosis is made and often after other treatments are initiated or completed.

Comment: Several commenters supported the proposed APC reassignments for HCPCS codes G0237, G0238, G0239, and G0424. These commenters indicated that the proposed payment increase for these services appears to be driven by more accurate and complete costs reports submitted by hospitals providing the service, and recommended that CMS finalize the proposed payment rates.

Response: We appreciate the commenters' support. We note that we proposed to reassign the HCPCS codes for these services based on the claims data used for the proposed rule that reported these codes as being conditionally packaged. Specifically, our analysis revealed a geometric mean cost of approximately $293 for HCPCS code G0237, which was relatively close to the geometric mean cost of approximately $278 for APC 5735. We also found that the geometric mean costs of approximately $165 for HCPCS code G0238 and approximately $169 for HCPCS code G0424 was relatively similar to APC 5791, which had a geometric mean cost of approximately $169. In addition, we found that the geometric mean cost of approximately $121 for HCPCs code G0239 was comparable to the geometric mean cost of approximately $100 for APC 5374. However, based on our review of the updated CY 2015 claims data used for this final rule with comment period, which included the status indicator revision from ''Q1'' to ''S'' for these codes, we found the geometric mean costs for HCPCS codes G0237, G0238, G0239, and G0424 to be significantly lower than the proposed rule geometric mean costs. This is due to significantly reduced packaged costs from other services after the status indicator was changed from ''Q1'' to ''S.'' We also note that the proposed rule claims data were based on claims submitted from January 1, 2015, through December 31, 2015, and processed through December 31, 2015, while the final rule with comment period claims data are based on claims submitted from January 1, 2015, through December 31, 2015, and processed through June 30, 2016. Based on our analysis of the final rule with comment period claims data, we found a geometric mean cost of approximately $24 for HCPCS code G0237, approximately $22 for HCPCS code G0238, approximately $33 for HCPCS code G0239, and approximately $44 for HCPCS code G0424. As a result of our findings, we are revising the APC assignments for HCPCS codes G0237, G0238, and G0239. Specifically, we found the geometric mean costs for HCPCS code G0237 ($24), G0238 ($22), and G0239 ($33) to be comparable to the geometric mean cost for APC 5732 ($29), while the geometric cost of HCPCS code G0424 ($44) was similar to that of APC 5733 ($56). Based on our analysis of the updated claims data used for the final rule with comment period, we believe that the revised APC assignments for the pulmonary rehabilitation services better reflect their clinical coherence and resource costs.

In summary, after consideration of the public comments we received and our analysis of the updated claims data for this final rule with comment period, we are modifying our proposal and reassigning HCPCS codes G0237, G0238, G0239, and G0424 to status indicator ''S.'' In addition, we are modifying our

proposal and reassigning HCPCS codes G0237, G0238, and G0239 to the final APCs listed in Table 34 below. Table 34 lists the final status indicator, APC assignments, and payment rates for the pulmonary rehabilitation services for CY 2017. We refer readers to Addendum B of this final rule with comment period for the payment rates for all codes reported under the OPPS. Addendum B is available via the Internet on the CMS Web site.

TABLE 34—FINAL CY 2017 STATUS INDICATOR (SI), APC ASSIGNMENTS, AND PAYMENT RATES FOR THE PULMONARY REHABILITATION SERVICES

HCPCS code	Long descriptors	CY 2016 OPPS SI	CY 2016 OPPS APC	CY 2016 OPPS payment	Final CY 2017 OPPS SI	Final CY 2017 OPPS APC	Final CY 2017 OPPS payment
G0237	Therapeutic procedures to increase strength or endurance of respiratory muscles, face to face, one on one, each 15 minutes (includes monitoring).	Q1	5734	$91.18	S	5732	$28.37
G0238	Therapeutic procedures to improve respiratory function, other than described by g0237, one on one, face to face, per 15 minutes (includes monitoring).	Q1	5733	55.94	S	5732	28.37
G0239	Therapeutic procedures to improve respiratory function or increase strength or endurance of respiratory muscles, two or more individuals (includes monitoring).	Q1	5732	30.51	S	5732	28.37
G0424	Pulmonary rehabilitation, including exercise (includes monitoring), one hour, per session, up to two sessions per day.	Q1	5733	55.94	S	5733	54.53

IV. OPPS Payment for Devices

A. Pass-Through Payments for Devices

1. Expiration of Transitional Pass-Through Payments for Certain Devices

a. Background

Section 1833(t)(6)(B)(iii) of the Act sets forth the period for which a device category eligible for transitional pass-through payments under the OPPS may be in effect. The implementing regulation at 42 CFR 419.66(g) provides that this pass-through payment eligibility period begins on the date CMS establishes a particular transitional pass-through category of devices. The eligibility period is for at least 2 years but no more than 3 years. We may establish a new device category for pass-through payment in any quarter. Under our current policy, we base the pass-through status expiration date for a device category on the date on which pass-through payment is effective for the category; that is, the date CMS establishes a particular category of devices eligible for transitional pass-through payments. (We note that in this final rule with comment period, in accordance with section 1833(t)(6)(B)(iii)(II) of the Act, we are adopting a policy to base pass-through status expiration for a device category on the first date on which pass-through payment is made under the OPPS.) We propose and finalize the dates for expiration of pass-through status for device categories as part of the OPPS annual update. We also have an established policy to package the costs of the devices that are no longer eligible for pass-through payments into the costs of the procedures with which the devices are reported in the claims data used to set the payment rates (67 FR 66763).

b. CY 2017 Pass-Through Devices

As stated earlier, section 1833(t)(6)(B)(iii) of the Act requires that, under the OPPS, a category of devices be eligible for transitional pass-through payments for at least 2 years, but not more than 3 years. There currently are four device categories eligible for pass-through payment: (1) HCPCS code C2624 (Implantable wireless pulmonary artery pressure sensor with delivery catheter, including all system components), which was established effective January 1, 2015; (2) HCPCS code C2623 (Catheter, transluminal angioplasty, drug-coated, non-laser), which was established effective April 1, 2015; (3) HCPCS code C2613 (Lung biopsy plug with delivery system), which was established effective July 1, 2015; and (4) HCPCS code C1822 (Generator, neurostimulator (implantable), high frequency, with rechargeable battery and charging system), which was established effective January 1, 2016. The pass-through payment status of the device category for HCPCS code C2624 will end on December 31, 2016. Therefore, in accordance with our current policy, in the CY 2017 OPPS/ASC proposed rule (81 FR 45649), we proposed, beginning in CY 2017, to package the costs of the device described by HCPCS code C2624 into the costs related to the procedure with which the device is reported in the hospital claims data. We stated in the proposed rule that the other three codes listed will continue with pass-through status in CY 2017. We did not receive any public comments on this proposal. Therefore, we are finalizing our proposal to expire device pass-through payments for the device described by HCPCS code C2624, effective January 1, 2017.

2. New Device Pass-Through Applications

a. Background

Section 1833(t)(6) of the Act provides for temporary additional payments, referred to as ''transitional pass-through payments,'' for devices and section 1833(t)(6)(B) of the Act requires CMS to use categories in determining the eligibility of devices for transitional pass-through payments. As part of implementing the statute through regulations, we have continued to believe that it is important for hospitals to receive pass-through payments for

devices that offer substantial clinical improvement in the treatment of Medicare beneficiaries to facilitate access by beneficiaries to the advantages of the new technology. Conversely, we have noted that the need for additional payments for devices that offer little or no clinical improvement over previously existing devices is less apparent. In such cases, these devices can still be used by hospitals, and hospitals will be paid for them through appropriate APC payment. Moreover, a goal is to target pass-through payments for those devices where cost considerations might be most likely to interfere with patient access (66 FR 55852; 67 FR 66782; and 70 FR 68629).

As specified in regulations at 42 CFR 419.66(b)(1) through (b)(3), to be eligible for transitional pass-through payment under the OPPS, a device must meet the following criteria: (1) if required by FDA, the device must have received FDA approval or clearance (except for a device that has received an FDA investigational device exemption (IDE) and has been classified as a Category B device by the FDA), or another appropriate FDA exemption; and the pass-through payment application must be submitted within 3 years from the date of the initial FDA approval or clearance, if required, unless there is a documented, verifiable delay in U.S. market availability after FDA approval or clearance is granted, in which case CMS will consider the pass-through payment application if it is submitted within 3 years from the date of market availability; (2) the device is determined to be reasonable and necessary for the diagnosis or treatment of an illness or injury or to improve the functioning of a malformed body part, as required by section 1862(a)(1)(A) of the Act; and (3) the device is an integral part of the service furnished, is used for one patient only, comes in contact with human tissue, and is surgically implanted or inserted (either permanently or temporarily), or applied in or on a wound or other skin lesion. In addition, according to 42 CFR 419.66(b)(4), a device is not eligible to be considered for device pass-through payment if it is any of the following: (1) equipment, an instrument, apparatus, implement, or item of this type for which depreciation and financing expenses are recovered as depreciation assets as defined in Chapter 1 of the Medicare Provider Reimbursement Manual (CMS Pub. 15–1); or (2) a material or supply furnished incident to a service (for example, a suture, customized surgical kit, or clip, other than a radiological site marker).

Separately, we use the following criteria, as set forth under § 419.66(c), to determine whether a new category of pass-through devices should be established. The device to be included in the new category must—

- Not be appropriately described by an existing category or by any category previously in effect established for transitional pass-through payments, and was not being paid for as an outpatient service as of December 31, 1996;
- Have an average cost that is not ''insignificant'' relative to the payment amount for the procedure or service with which the device is associated as determined under § 419.66(d) by demonstrating: (1) the estimated average reasonable costs of devices in the category exceeds 25 percent of the applicable APC payment amount for the service related to the category of devices; (2) the estimated average reasonable cost of the devices in the category exceeds the cost of the device-related portion of the APC payment amount for the related service by at least 25 percent; and (3) the difference between the estimated average reasonable cost of the devices in the category and the portion of the APC payment amount for the device exceeds 10 percent of the APC payment amount for the related service (with the exception of brachytherapy and temperature-monitored cryoblation, which are exempt from the cost requirements as noted at §§ 419.66(c)(3) and (e); and
- Demonstrate a substantial clinical improvement, that is, substantially improve the diagnosis or treatment of an illness or injury or improve the functioning of a malformed body part compared to the benefits of a device or devices in a previously established category or other available treatment.

Beginning in CY 2016, we changed our device pass-through evaluation and determination process. Device pass-through applications are still submitted to us through the quarterly subregulatory process, but the applications will be subject to notice-and-comment rulemaking in the next applicable OPPS annual rulemaking cycle. Under this process, all applications that are preliminarily approved upon quarterly review will automatically be included in the next applicable OPPS annual rulemaking cycle, while submitters of applications that are not approved upon quarterly review will have the option of being included in the next applicable OPPS annual rulemaking cycle or withdrawing their application from consideration. Under this notice-and-comment process, applicants may submit new evidence, such as clinical trial results published in a peer-reviewed journal, or other materials for consideration during the public comment process for the proposed rule. This process allows those applications that we are able to determine meet all the criteria for device pass-through payment under the quarterly review process to receive timely pass-through payment status, while still allowing for a transparent, public review process for all applications (80 FR 70417 through 70418). More details on the requirements for device pass-through payment applications are included on the CMS Web site in the application form itself at: *http://www.cms.gov/Medicare/Medicare-Fee-for-Service-Payment/HospitalOutpatientPPS/passthrough_payment.html*, in the ''Downloads'' section.

In addition, CMS is amenable to meeting with applicants or potential applicants to discuss research trial design in advance of any device pass-through application or to discuss application criteria, including the substantial clinical improvement criterion.

b. Applications Received for Device Pass-Through Payment for CY 2017

We received three applications by the March 1, 2016 quarterly deadline, which was the last quarterly deadline in time to be included for the CY 2017 OPPS/ASC proposed rule. None of these three applications were approved for device pass-through payment during the quarterly review process. Applications received for the later deadlines for the remaining 2016 quarters (June 1, September 1, and December 1), if any, will be presented in the CY 2018 OPPS/ASC proposed rule. We note that the quarterly application process and requirements have not changed in light of the addition of rulemaking review. Detailed instructions on submission of a quarterly device pass-through payment application are included on the CMS Web site at: *https://www.cms.gov/Medicare/Medicare-Fee-for-Service-Payment/HospitalOutpatientPPS/Downloads/catapp.pdf*. A discussion of the three applications received by the March 1, 2016 deadline is presented below, as detailed in the CY 2017 OPPS/ASC proposed rule (81 FR 45650 through 45653).

(1) BioBag® (Larval Debridement Therapy in a Contained Dressing)

BioMonde US, LLC submitted an application for a new device pass-through category for the BioBag® (larval debridement therapy in a contained dressing) (hereinafter referred to as the

BioBag®). According to the applicant, BioBag® is a biosurgical wound treatment (''maggot therapy'') consisting of disinfected, living larvae (Lucilia sericata) in a polyester net bag; the larvae remove dead tissue from wounds. The BioBag® is indicated for debridement of nonhealing necrotic skin and soft tissue wounds, including pressure ulcers, venous stasis ulcers, neuropathic foot ulcers, and nonhealing traumatic or postsurgical wounds. Debridement, which is the action of removing devitalized tissue and bacteria from a wound, is required to treat or prevent infection and to allow the wound to progress through the healing process. This system contains disinfected, living larvae that remove the dead tissue from wounds and leave healthy tissue undisturbed. The larvae are provided in a sterile polyester net bag, available in different sizes. The only other similar product is free-range (that is, uncontained) larvae. Free-range larvae are not widely used in the United States because application is time consuming, there is a fear of larvae escaping from the wound, and there are concerns about proper and safe handling of the larvae. The total number of treatment cycles depends on the characteristics of the wound, the response of the wound, and the aim of the therapy. Most ulcers are completely debrided within 1 to 6 treatment cycles.

With respect to the newness criterion at § 419.66(b)(1), the applicant received FDA clearance for BioBag® through the premarket notification section 510(k) process on August 28, 2013, and its March 1, 2016 application was within 3 years of FDA clearance. The applicant claims that BioBag® is an integral part of the wound debridement, is used for one patient only, comes in contact with human skin, and is applied in or on a wound. In addition, the applicant stated that BioBag® is not an instrument, apparatus, or item for which depreciation and financing expenses are recovered. We believe that BioBag could be considered to be a surgical supply similar to a surgical dressing that facilitates either mechanical or autolytic debridement (for example, hydrogel dressings), and therefore ineligible for device pass-through payments under the provisions of § 419.66(b)(4)(ii). In the CY 2017 OPPS/ASC proposed rule (81 FR 45650), we invited public comment on whether BioBag® should be eligible under § 419.66(b) to be considered for device pass-through payment.

Comment: One commenter, the manufacturer, submitted comments on whether BioBag® should be considered to be a surgical supply similar to a surgical dressing that facilitates either mechanical or autolytic debridement. The commenter stated that BioBag® is a ''treatment for active and physical wound debridement'' that does not function like an autolytic or mechanical debridement, but more like a sharp debridement, surgical debridement or water-jet. The commenter also noted that BioBag® is individualized to the patient and has a limited viability window, and that ordering, manufacturing, storage and handling are different than for a supply.

Response: For purposes of the device pass-through payment process, we are persuaded by this additional information, and we no longer consider the BioBag® product to be an ineligible supply under § 419.66(b)(4)(ii) of the regulations because the BioBag® is not ''furnished incident to a service,'' as described in § 419.66(b)(4)(ii).

With respect to the existence of a previous pass-through device category that describes the BioBag®, the applicant suggested a category descriptor of ''Larval therapy for the debridement of necrotic non-healing skin and soft tissue wounds.'' We stated in the proposed rule that we have not identified an existing pass-through payment category that describes the BioBag®, but we welcomed public comments on this issue.

We did not receive any public comments on this issue and have not identified an existing pass-through payment category that describes BioBag®.

With respect to the cost criterion, the applicant stated that BioBag® would be reported with CPT code 97602 (Removal of devitalized tissue from wound(s), non-selective debridement, without anesthesia (*e.g.,* wet-to-moist dressings, enzymatic, abrasion), including topical application(s), wound assessment, and instruction(s) for ongoing care, per session). CPT code 97602 is assigned to APC 5051 (Level 1 Skin Procedures), with a CY 2016 payment rate of $117.83, and the device offset is $1.18. The price of BioBag® varies with the size of the bag ($375 to $435 per bag), and bag size selection is based on the size of the wound. To meet the cost significance criterion, there are three cost significance subtests that must be met and calculations are noted below. The first cost significance is that the device cost needs to be at least 25 percent of the applicable APC payment rate to reach cost significance, as follows for the highest-priced BioBag®: $435/117.83 × 100 = 369 percent. Thus, BioBag® meets the first cost significance test. The second cost significance test is that the device cost needs to be at least 125 percent of the offset amount (the device-related portion of the APC found on the offset list): $435/1.18 × 100 = 36864 percent. Thus, BioBag® meets the second cost significance test. The third cost significance test is that the difference between the estimated average reasonable cost of the devices in the category and the portion of the APC payment amount determined to be associated with the device in the associated APC exceeds 10 percent of the total APC payment: ($435 − 1.18)/117.83 × 100 = 368 percent. Thus, BioBag® meets the third cost significance test and satisfies the cost significance criterion.

With respect to the substantial clinical improvement criterion, the applicant cited a total of 18 articles relating to wound debridement, and most of these articles discussed the use of larval therapy for the treatment of ulcers. One peer-reviewed journal article described a randomized controlled trial with 267 subjects who received loose larvae, bagged larvae, or hydrogel intervention.[1] Results of the study showed that the time to healing was not significantly different between the three groups, but that larval therapy significantly reduced the time to debridement (hazard ratio for the combined larvae group compared with hydrogel was 2.31 (95 percent confidence interval 1.65 to 3.24; P<0.001)); and mean ulcer related pain scores were higher in either larvae group compared with hydrogel (mean difference in pain score: loose larvae versus hydrogel 46.74 (95 percent confidence interval 32.44 to 61.04), P<0.001; bagged larvae versus hydrogel 38.58 (23.46 to 53.70), P<0.001).

Another article described a study of 88 patients (of which 64 patients completed the study) and patients either received a larval therapy dressing (BioFOAM) or hydrogel.[2] Because the study did not use BioBag® and there was a large drop-out rate that was not fully explained, we did not find this article helpful in determining whether the BioBag® provides a substantial clinical improvement compared to existing wound debridement modalities.

Another article that the applicant submitted was a meta-analysis of maggot debridement therapy compared to standard therapy for diabetic foot

[1] Dumville, et al.: Larval therapy for leg ulcers (VenUS II): randomized controlled trial).

[2] Mudge, et al.: A randomized controlled trial of larval therapy for the debridement of leg ulcers: Results of a multicenter, randomized, controlled, open, observer blind, parallel group study. *Wound Repair and Regeneration.* 2013, 1–9.

ulcers.[3] It compared four studies with a total of 356 participants and the authors concluded that maggot debridement therapy ''may be a scientific and effective therapy in treatment of diabetic foot ulcers'' but ''the evidence is too weak to routinely recommend it for treatment''.

There were some additional articles provided that included a case series of maggot therapy with no control group, a retrospective study with free-range maggot therapy, maggot therapy as treatment of last resort, in vitro studies, economic modeling for wound therapy, an informational review of maggot debridement therapy and other debridement therapies, and research on other wound therapy options. These remaining articles did not assist in assessing substantial clinical improvement of BioBag® compared to existing treatments. Based on the evidence submitted with the application, we stated in the proposed rule that we are not yet convinced that the BioBag® provides a substantial clinical improvement over other treatments for wound debridement. We invited public comments on whether the BioBag® meets the substantial clinical improvement criterion.

Comment: One commenter, the manufacturer, disagreed with CMS' review of the three cited articles from the initial application (Tian, Dumville, Mudge) and suggested that these articles prove substantial clinical improvement. Specifically, the commenter noted that the meta-analysis by Tian suggests that findings of lower amputation rates, less antibiotic use, increased healing rates and increased healing times for larval therapy over conventional treatments are statistically significant, although the conclusion states that more evidence is needed; and that the randomized controlled trial by Mudge showed that successful wound debridement was 96.9 percent with larvae compared to 34.4 percent with hydrogel. (However, the commenter noted this trial was performed with BioFoam, which is a variation of the current BioBag® product, but stated that the two were similar.) In addition, the commenter stated that larval therapy demonstrated healing 9 days faster than hydrogel, although it was not believed to be statistically significant by the authors in the Dumville trial.

Several commenters representing health care professionals who have an interest in wound management supported the BioBag® application. These commenters provided testimonials of their or their patients' favorable experience with larval therapy. However, these commenters did not provide empirical data pertaining to substantial clinical improvement.

Response: We appreciate the commenters' responses on the BioBag® application. However, none of the commenters provided new empirical evidence that demonstrates clinical superiority of the BioBag® over existing treatment options. At this time, we have not been able to determine that the BioBag® represents a substantial clinical improvement relative to existing therapies currently available for wound care.

After consideration of the public comments we received, we are not approving device pass-through payment status for the BioBag® for CY 2017.

(2) Encore™ Suspension System

Siesta Medical, Inc. submitted an application for a new device pass-through category for the Encore Suspension System (hereinafter referred to as the Encore™ System). According to the application, the Encore™ System is a kit of surgical instruments and implants that are used to perform an adjustable hyoid suspension. In this procedure, the hyoid bone (the U-shaped bone in the neck that supports the tongue) and its muscle attachments to the tongue and airway are pulled forward with the aim of increasing airway size and improving airway stability in the retrolingual and hypopharyngeal airway (airway behind and below the base of tongue). This procedure is indicated for the treatment of mild or moderate obstructive sleep apnea (OSA) and/or snoring, when the patient is unable to tolerate continuous positive airway pressure (CPAP). The current alternative to the hyoid suspension is the hyo-thyroid suspension technique (hyothyroidpexy). The Encore™ System is designed for hyoid bone suspension to the mandible bone using bone screws and suspension lines. The Encore™ System kit contains the following items:

- Integrated suture passer pre-loaded with polyester suture;
- Three bone screws and two bone screw inserters;
- Suspension line lock tool;
- Threading tool for suspension lines; and
- Four polyester suspension lines.

With regard to the newness criterion, the Encore™ System received FDA clearance through the section 510(k) process on March 26, 2014. Accordingly, it appears that the Encore™ System is new for purposes of evaluation for device pass-through payments.

Several components of the Encore™ System appear to be either instruments or supplies, which are not eligible for pass-through according to § 419.66(b)(4)(i) and (ii). For instance, the suture passer is an instrument and the suture is a supply, the bone screw inserters are instruments, the suspension line lock tool is an instrument, the threading tool for suspension lines is an instrument, and the polyester suspension lines are similar to sutures and therefore are supplies. With respect to the presence of a previously established code, the only implantable devices in the kit are the bone screws, and by the applicant's own admission the bone screws are described by the existing pass-through category HCPCS code C1713 (Anchor/screw for opposing bone-to-bone or soft tissue-to-bone (implantable)). In the CY 2017 OPPS/ASC proposed rule (81 FR 45651), we invited public comments on whether the Encore™ System bone screws are described by a previously existing category and also whether the remaining kit components are supplies or instruments.

Comment: One commenter, the manufacturer, stated that the Encore™ bone screws are designed with unique strength, profile and adjustability functions for the Encore™ System, and therefore the bone screws are not adequately described by HCPCS code C1713. In addition, the commenter stated that the remaining kit components are custom designed for the procedure, would not be available otherwise within the operating room, and, therefore, would not meet the criteria for supplies and instruments, as specified in § 419.66(b)(4)(i)(ii).

Response: We note that manufacturers frequently package a number of individual items used with a device for a particular procedure into a kit. Hospitals may not bill for transitional pass-through payments for supplies that may be contained in kits (Medicare Claims Processing Manual (Pub. 100–04, Chapter 4, Section 60.4)). We continue to believe that the suture passer, the bone screw inserters, the suspension line lock tool, and the threading tool for suspension lines are all instruments and that the sutures and polyester suspension lines are supplies, even though they may have been customized for the procedure. Regarding the bone screws, we continue to believe that the bone screws are described by HCPCS code C1713 because, although customized, the bone screws anchor/

[3] Tian et al.: Maggot debridement therapy for the treatment of diabetic foot ulcers: a meta-analysis. *Journal of Wound Care.* Vol. 22, No. 9, 2013.

screw for opposing bone-to-bone (hyoid bone to mandible bone).

With regard to the cost criterion, the applicant stated that the Encore™ System would be used in the procedure described by CPT code 21685 (Hyoid myotomy and suspension). CPT code 21685 is assigned to APC 5164 (Level 4 ENT Procedures) with a CY 2016 payment rate of $1,616.90, and the device offset is $15.85. The price of the Encore™ System as stated in the application is $2,200. To meet the cost criterion, there are three cost significance subtests that must be met and the calculations are noted below. The first cost significance is that the device cost needs to be at least 25 percent of the applicable APC payment rate to reach cost significance: $2,200/$1,616.90 × 100 percent = 136 percent. Thus, the Encore™ System meets the first cost significance test. The second cost significance test is that the device cost needs to be at least 125 percent of the offset amount (the device-related portion of the APC found on the offset list): $2,200/$15.85 × 100 percent = 13880 percent. Thus, the Encore™ System meets the second cost significance test. The third cost significance test is that the difference between the estimated average reasonable cost of the devices in the category and the portion of the APC payment amount determined to be associated with the device in the associated APC exceeds 10 percent of the total APC payment: ($2,200—$15.85)/$1,616.90 × 100 percent = 135 percent. Thus, the Encore™ System meets the third cost significance test. Based on the costs submitted by the applicant and the calculations noted earlier, the Encore™ System meets the cost criterion. However, as stated in the proposed rule, we have concerns about whether the cost criterion would be met if based only on the kit components that are not supplies, not instruments, and not described by an existing category (if any).

We did not receive any public comments related to the cost criterion of the Encore™ System application. As noted earlier in this section, the applicant stated that the Encore™ System would be used in the procedure described by CPT code 21685 (Hyoid myotomy and suspension). CPT code 21685 is assigned to APC 5164 (Level 4 ENT Procedures) with a CY 2016 payment rate of $1,616.90, and the device offset is $15.85. The applicant also stated that the price of the Encore™ System is $2,200. Based on our determination earlier in this section of this final rule with comment period, the device is described by HCPCS code C1713 and the bone screws and other kit supplies are supplies and instruments. Because of this determination, the cost of the device and the other components in the kit cannot be included in the device costs used to determine whether the device meets the cost criterion. Accordingly, the Encore™ System does not meet the cost threshold.

With regard to the substantial clinical improvement criterion, the applicant provided a thorough review of the hyoid myotomy with suspension and other surgical procedures that treat mild or moderate obstructive sleep apnea. However, specific data addressing substantial clinical improvement with the Encore™ System were lacking. The application included information on a case series of 17 obstructive apnea patients who received an Encore hyo-mandibular suspension as well as a previous or concurrent uvulopalatopharyngoplasty (UPPP). According to the application, the 17 patients studied demonstrated a 76 percent surgical success, and 73 percent median reduction in the Respiratory Disturbance Index (RDI) at 3 months, significantly reduced surgical time, and 1 infection requiring device removal. This study was a retrospective, single center study with no comparator.

In addition, the American Academy of Otolaryngology Head and Neck Surgery (AAOHNS) ''Position Statement: Tongue Based Procedures'' (accessed on 3.30.2016 and located at: *http://www.entnet.org/node/215*) considers the Hyoid myotomy and suspension ''effective and non-investigational with proven clinical results when considered as part of the comprehensive surgical management of symptomatic adult patients with mild obstructive sleep apnea (OSA) and adult patients with moderate and severe OSA assessed as having tongue base or hypopharyngeal obstruction.'' The AMA CPT Editorial Panel created CPT code 21685 (Hyoid myotomy and suspension) in 2004. The AAOHNS statement and the age of the CPT code indicate that this is an established surgical procedure. The Encore™ System is a new kit of surgical instruments and implantable materials that are used to perform this procedure. According to the Encore™ System's section 510(k) Summary, ''[t]he fundamental scientific technology and technological characteristics of the Encore™ System are the same as the predicate devices,'' which includes the Medtronic AirVance System (another surgical kit used on CPT code 21685). The applicant claimed several advantages of the Encore™ System over the AirVance System that relate to greater ease of use for the surgeon and better long-term stability. However, there are no studies comparing the Encore™ System to the AirVance System. There are no clinical data provided by the applicant to suggest that the Encore™ System kit provides a substantial clinical improvement over other instruments/implants that are used to perform Hyoid myotomy and suspension. In the proposed rule, we invited public comments on whether the Encore™ System meets the substantial clinical improvement criterion.

Comment: One commenter stated that the Encore™ System has ''provided improved and more consistent results than previous hyoid suspension techniques'' and that it is reasonable to assume that a system that provides significantly improved control of the hyoid bone suspension location and greater long-term stability of this surgically modified hyoid bone location will lead to improved and less variable clinical results for the patients treated, including reducing the mortality rate, future hospitalization, and the need for future additional interventions. Numerous commenters who used the Encore™ System supported the application and stated that, in their experience, the system provided a substantial clinical improvement for performing hyomandibular suspension and was superior to the hyo-thyroid technique. These commenters did not provide any new empirical data in support of the application.

Response: As stated in the proposed rule, there were no clinical data provided by the applicant to suggest that the Encore™ System kit provides a substantial clinical improvement over other instruments/implants that are used to perform Hyoid myotomy and suspension. While the commenters provided some suggestions that the Encore™ System kit had clinical merits, these suggestions were anecdotal and largely based on assumptions, not actual empirical clinical evidence. Because no new significant information or data were provided through the public comments, we are not able to determine that the Encore™ System represents a substantial clinical improvement relative to existing medical treatments.

After consideration of the public comments we received, we are not approving device pass-through payment status for the Encore™ System for CY 2017.

(3) Endophys Pressure Sensing System (Endophys PSS) or Endophys Pressure Sensing Kit

Endophys Holdings, LLC. submitted an application for a new device pass-

through category for the Endophys Pressure Sensing System or Endophys Pressure Sensing Kit (hereinafter referred to as the Endophys PSS). The applicant suggested a category descriptor within either the HCPCS code C18XX series or the HCPCS code C26XX series and the device was described by the applicant as a stand-alone catheterization sheath that is inserted percutaneously during intravascular diagnostic or interventional procedures. When applied intravascularly, the two separate functions delivering an improved patient outcome include: (1) Continuous intra-arterial blood pressure monitoring using a high-precision Fabry-Perot pressure sensor located within the device anterior approaching the distal tip of the system; and (2) a conduit that allows the introduction of other devices for cardiovascular or percutaneous interventional procedures.

The Endophys PSS is an introducer sheath (including a dilator and guidewire) with an integrated fiber optic pressure transducer for blood pressure monitoring. The Endophys PSS is used with the Endophys Blood Pressure Monitor to display blood pressure measurements. The sheath is inserted percutaneously during intravascular diagnostic or interventional procedures, typically at the site of the patient's femoral artery. This device facilitates the introduction of diagnostic and interventional devices into the coronary and peripheral vessels while continuously sensing and reporting blood pressure during the interventional procedure. Physicians would use this device to pass guidewires, catheters, stents, and coils, to perform the diagnostic or therapeutic treatment on the coronary or other vasculature. The Endophys PSS provides continuous blood pressure monitor information to the treating physician so that there is no need for an additional arterial access site for blood pressure monitoring.

With respect to the newness criterion, the Endophys PSS received FDA clearance through the section 510(k) process on January 7, 2015, and therefore is new. According to the applicant, the Endophys PSS is an integral part of various endovascular procedures, is used for one patient only, comes in contact with human skin, and is surgically implanted. Endophys PSS is not an instrument, apparatus, implement or item for which depreciation and financing expenses are recovered, and it is not a supply or material.

With respect to the presence of a previously established category, based on our review of the application, we believe that Endophys PSS may be described by HCPCS code C1894 (Introducer/sheath, other than guiding, other than intracardiac electrophysiological, non-laser). The FDA section 510(k) Summary Product Description Section in the application describes the Endophys PSS as an introducer sheath with an integrated fiber optic pressure transducer. Because the Endophys PSS is an introducer sheath that is not guiding, not intracardiac electrophysiological, and not a laser, we believe that it is described by the previously existing category of HCPCS code C1894 established for transitional pass-through payments. In the CY 2017 OPPS/ASC proposed rule (81 FR 45652), we invited public comment on whether Endophys PSS is described by a previously existing category.

Comment: One commenter, the manufacturer, disagreed with CMS that the Endophys PSS is described by HCPCS code C1894 and states that HCPCS code C1894 ''describes a device that does not look like the Endophys PSS, does not provide continuous intraarterial blood pressure readings equivalent to a radial arterial line, is not used or monitored by a physician in a similar manner.'' The commenter noted that the design for Endophys PSS is patented. The commenter also noted that FDA has assigned new product codes to the Endophys PSS that are not similar to devices described by HCPCS code C1894.

Response: We continue to believe that HCPCS code C1894 accurately describes the Endophys PSS because it is a type of introducer/sheath (but with a built-in pressure transducer). Also, a new product code from the FDA, which is used by the FDA to classify and track a medical device, is not relevant in CMS' consideration of whether the device is described by an existing HCPCS C-code. The FDA may provide new product codes for items that we consider to be described more broadly and with an existing HCPCS C-code.

With respect to the cost criterion, according to the applicant, the Endophys PSS would be reported with CPT code 36620 (Arterial catheterization or cannulation for sampling, monitoring or transfusion (separate procedure); percutaneous). CPT code 36620 is assigned status indicator ''N'', which means its payment is packaged under the OPPS. The applicant stated that its device can be used in many endovascular procedures that are assigned to the APCs listed below:

APC	Description
5188	Diagnostic Cardiac Catheterization.
5191	Level 1 Endovascular Procedures.
5526	Level 6 X-Ray and Related Services.
5183	Level 3 Vascular Procedures.
5181	Level 1 Vascular Procedures.
5182	Level 2 Vascular Procedures.
5291	Thrombolysis and Other Device Revisions.

To meet the cost criterion for device pass-through payment, a device must pass all three tests for cost threshold for at least one APC. For our calculations, we used APC 5291 (Thrombolysis and Other Device Revisions), which has a CY 2016 payment rate of $199.80 and the device offset of $3.38. According to the applicant, the cost of the Endophys PSS is $2,500. The first cost significance test is that the device cost needs to be at least 25 percent of the applicable APC payment rate to reach cost significance: $2,500/199.80 × 100 percent = 1251 percent. Thus, the Endophys PSS meets the first cost significance test. The second cost significance test is that the device cost needs to be at least 125 percent of the offset amount (the device-related portion of the APC found on the offset list): $2,500/3.38 × 100 percent = 73964 percent. Thus, the Endophys PSS meets the second cost significance test. The third cost significance test is that the difference between the estimated average reasonable cost of the devices in the category and the portion of the APC payment amount determined to be associated with the device in the associated APC exceeds 10 percent of the total APC payment: ($2,500 − 3.38)/199.80 × 100 percent = 1250 percent. Thus, the Endophys PSS meets the third cost significance test. Based on the costs submitted by the applicant and the above calculations, the Endophys PSS meets the cost criterion. In the proposed rule, we invited public comments on this issue.

We did not receive any public comments on whether the Endophys PSS meets the cost criterion. We continue to believe that the Endophys PSS meets the cost criterion.

With respect to the substantial clinical improvement criterion, the applicant stated that the Endophys PSS represents a substantial clinical improvement over existing medical therapies because the Endophys PSS includes a built-in pressure sensor, which eliminates the need for a second arterial line to monitor the blood pressure. The applicant stated that the Endophys PSS reduces the time to treatment for the patient (because there is no time needed to establish the second arterial line) and reduces

potential complications associated with the second arterial line. While several references were provided in support of this application, there were minimal direct clinical data provided on the Endophys PSS to support substantial clinical improvement. The application included slides with statements pertaining to cost savings, reduced morbidity and life saving for a study of 36 patients, but a published study was not submitted and additional information on study design and other details of the study were not provided. Also, the applicant provided six physician testimonials citing support for the Endophys PSS based on between one and six patient experiences with the device.

The published articles provided with the application did not provide any information based on usage of the Endophys PSS. Topics addressed in the references included: Articles on intraarterial treatment for acute ischemic stroke; references providing education on blood pressure measurement and monitoring; articles on complications during percutaneous coronary intervention; and a reference on ultrasound guided placement of arterial cannulas in the critically ill. Given the paucity of studies using the Endophys PSS, we stated in the proposed rule that we have not been persuaded that the threshold for substantial clinical improvement has been met. We invited public comments on whether the Endophys PSS meets the substantial clinical improvement criterion.

Comment: One commenter, the manufacturer, submitted a new publication [4] that compared a set of patients' radial artery catheterization (RAC) blood pressure measurements, sphygmomanometer readings, and measurements from the Endophys PSS. Study results suggested that the Endophys PSS correlated with the RAC and the blood pressure cuff. The study authors conclude that because the Endophys PSS has ''competitive functionality to that seen with a dedicated radial artery catheter for blood pressure monitoring and is available immediately on sheath insertion without the added risk of [RAC] . . . , potential complications from RAC could be avoided.'' In addition, in its comment, the commenter noted that validation of the patient benefit due to the lack of a second arterial line for blood pressure monitoring in a randomized clinical trial may not meet the criteria of a well-designed clinical investigation and cited three considerations for why this is the case. The commenter noted that the ''clinical evidence is abundant in the published literature reporting the incidence of radial arterial catheterization complications, cost, and patient morbidity. Time saved by eliminating a second RA placement while providing equivalent and continuous arterial pressure readings is obvious, and has cost benefits beyond the purely medical benefits discussed above.'' The commenter further noted that patients who received Endophys PSS ''did not require a RA catheter placement, no serious complications were reported, and that the procedure was completed achieving the therapeutic objective. Reports were received across the centers noting when using accurate continuous arterial pressures the clinician was alerted to serious changes in blood pressure requiring immediate attention. In the absence of the Endophys PSS, the variance would not have been identified causing the patient to suffer complications.''

Response: We appreciate the submission of the new study as well as the public comment. We note that the study appears to show correlation on blood pressure readings between the Endophys PSS and RAC, and we believe that a clinical trial of the Endophys PSS versus RAC examining complication rates would be necessary to validate the theory of reduction in complication rates with use of the Endophys PSS. Accordingly, we do not believe the study supports a definitive conclusion that this device provides a substantial clinical improvement over existing modalities.

After consideration of the public comments we received, we are not approving device pass-through payment status for the Endophys PSS for CY 2017.

3. Beginning Eligibility Date for Device Pass-Through Payment Status

The regulation at 42 CFR 419.66(g) currently provides that the pass-through payment eligibility period begins on the date CMS establishes a category of devices. In the CY 2017 OPPS/ASC proposed rule (81 FR 45653), we proposed to amend § 419.66(g) such that it more accurately comports with section 1833(t)(6)(B)(iii)(II) of the Act, which provides that the pass-through eligibility period begins on the first date on which pass-through payment is made. We recognize that there may be a difference between the establishment of a pass-through category and the date of first pass-through payment for a new pass-through device for various reasons. In most cases, we would not expect this proposed change in the beginning pass-through eligibility date to make any difference in the anticipated pass-through expiration date. However, in cases of significant delay from the date of establishment of a pass-through category to the date of the first pass-through payment, by using the date that the first pass-through payment was made rather than the date on which a device category was established could result in an expiration date of device pass-through eligibility that is later than it otherwise would have been had the clock began on the date the category was first established. We invited public comments on our proposal.

Comment: Many commenters supported the proposal. The commenters' statements of support included that the proposed policy recognizes that the quarterly implementation date may not be aligned with market availability and starting the device pass-through eligibility period on date of first payment would allow for more robust data collection for the purposes of setting future APC rates to accurately include the device costs.

Response: We appreciate the commenters' support.

After consideration of the public comments we received, we are finalizing the proposal to amend § 419.66(g) such that it provides that the pass-through eligibility period begins on the first date on which pass-through payment is made.

4. Policy To Make the Transitional Pass-Through Payment Period 3 Years for All Pass-Through Devices and Expire Pass-Through Status on a Quarterly Rather Than Annual Basis

a. Background

As required by statute, transitional pass-through payments for a device described in section 1833(t)(6)(B)(iii) of the Act can be made for a period of at least 2 years, but not more than 3 years, beginning on the first date on which pass-through payment was made for the product. Our current policy is to accept pass-through applications on a quarterly basis and to begin pass-through payments for new pass-through devices on a quarterly basis through the next available OPPS quarterly update after the approval of a device's pass-through status. However, we expire pass-through status for devices on a calendar-year basis through notice-and-comment rulemaking rather than on a quarterly basis. Device pass-through status currently expires at the end of a

[4] Purdy PD, South C. Klucznik RP et al. *J NeuroIntervent Surg.* Published online first July 16, 2016 doi:10.1136/neurintsurg-2016–012536).

calendar year when at least 2 years of pass-through payments have been made, regardless of the quarter in which it was initially approved. This means that the duration of the pass-through eligibility for a particular device will depend upon when during a year the applicant applies and is approved for pass-through payment. For example, a new pass-through device with pass-through payment status effective on April 1 would receive 2 years and 3 quarters of pass-through payment status, while a pass-through device with pass-through payment status effective on October 1 would receive 2 years and 1 quarter of pass-through payment status.

b. CY 2017 Policy

In the CY 2017 OPPS/ASC proposed rule (81 FR 45653), we proposed, beginning with pass-through devices newly approved in CY 2017 and subsequent calendar years, to allow for a quarterly expiration of pass-through payment status for devices to afford a pass-through payment period that is as close to a full 3 years as possible for all pass-through payment devices. This proposed change would eliminate the variability of the pass-through eligibility period, which currently varies based on the timing of the particular application. For example, under this proposal, for a device with pass-through first effective on October 1, 2017, pass-through payment status would expire on September 30, 2020. As stated in the proposed rule, we believe that the payment adjustment for transitional pass-through payments for devices under the OPPS is intended to provide adequate payment for new innovative technology while we collect the necessary data to incorporate the costs for these devices into the calculation of the associated procedure payment rate (66 FR 55861). We believe that the 3-year maximum pass-through payment period for all pass-through devices would better insure robust data collection and more representative procedure payments once the pass-through payment devices are packaged. We invited public comments on this proposal.

Comment: Many commenters, including MedPAC, supported the proposal. Some commenters suggested that, by maximizing the timeframe for receipt of device pass-through payment, there would be more robust cost data that can be utilized for setting future APC rates to accurately include the device costs.

Response: We appreciate the commenters' support.

Comment: One commenter asked whether CMS intends to adjust payment rates mid-year to include the costs of newly packaged devices upon expiration of device pass-through payments, when a device pass-through payment status expires mid-year. The commenter was concerned that hospitals might not receive adequate payment for the costs of a device, unless the payment was also adjusted, when the device pass-through payment status expired.

Response: We do not generally adjust payment rates mid-year and do not anticipate doing so for this proposal. Under our final policy, we will continue to include all device costs in the associated procedure(s) for ratesetting purposes. The final CY 2017 OPPS policy represents an extension of the timeframe for which device pass-through payment policy applies but does not affect the claims available for ratesetting purposes. We note that our not adjusting rates mid-year will not result in double payment for devices. While the device maintains pass-through payment status, we will reduce APC payment by the device offset and add the device pass-through payment; once the device pass-through payment status expires, hospitals will bill for and receive the full APC payment, which includes packaged device costs.

Comment: Several commenters requested that CMS consider amending the proposal in order to implement the proposed policy retroactively to previously approved devices that were proposed to continue receiving device pass-through payments in CY 2017. The commenters stated that this recommended change would extend the timeframe for receipt of device pass-through payments to current applicants that have already been awarded device pass-through payment status and anticipate receipt of device pass-through payments in CY 2017.

Response: As proposed, the policy begins with pass-through devices newly approved in CY 2017, and we are not going to this policy for devices that received pass-through payment approval prior to CY 2017.

After consideration of the public comments we received, we are finalizing, without modification, our proposal to allow for quarterly expiration of pass-through payment status for devices, beginning with newly approved pass-through payment devices in CY 2017 and subsequent calendar years, to afford a pass-through payment period that is as close to a full 3 years as possible for all pass-through payment devices.

5. Changes to Cost-to-Charge Ratios (CCRs) That Are Used To Determine Device Pass-Through Payments

a. Background

Section 1833(t)(6)(D)(ii) of the Act and 42 CFR 419.66(h) describe how payment will be determined for pass-through payment devices. Currently, transitional pass-through payments for devices are calculated by taking the hospital charges for each billed device, reducing them to cost by use of the hospital's average CCR across all outpatient departments, and subtracting an amount representing the device cost contained in the APC payments for procedures involving that device (65 FR 18481 and 65 FR 67809). In the original CY 2000 OPPS final rule, we stated that we would examine claims in order to determine if a revenue center-specific set of CCRs should be used instead of the average CCR across all outpatient departments (65 FR 18481).

In the FY 2009 IPPS final rule (73 FR 48458 through 48467), CMS created a cost center for ''Medical Supplies Charged to Patients,'' which are generally low cost supplies, and another cost center for ''Implantable Devices Charged to Patients,'' which are generally high-cost implantable devices. This change was in response to a Research Triangle Institute, International (RTI) study that was discussed in the FY 2009 IPPS final rule and which determined that there was charge compression in both the IPPS and the OPPS cost estimation of expensive and inexpensive medical supplies. Charge compression can result in undervaluing high-cost items and overvaluing low-cost items when an estimate of average markup, embodied in a single CCR (such as the hospital-wide CCR) is applied to items of widely varying costs in the same cost center. By splitting medical supplies and implantable devices into two cost centers, some of the effects of charge compression were mitigated. The cost center for ''Implantable Devices Charged to Patients'' has been available for use for OPPS cost reporting periods beginning on or after May 1, 2009.

In CY 2013, we began using data from the ''Implantable Devices Charged to Patients'' cost center to create a distinct CCR for use in calculating the OPPS relative payment weights for CY 2013 (77 FR 68225). Hospitals have adapted their cost reporting and coding practices in order to report usage to the ''Implantable Devices Charged to Patients'' cost center, resulting in sufficient data to perform a meaningful analysis. However, we have continued to use the hospital-wide CCR in our

calculation of device pass-through payments. We have received a request to consider using the ''Implantable Devices Charged to Patients'' CCR in the calculation of device pass-through payment and have evaluated this request. An analysis of the CCR data for the CY 2017 OPPS/ASC proposed rule indicated that about two-thirds of providers have an ''Implantable Devices Charged to Patients'' CCR. At the time of our analysis for the proposed rule, for the hospitals that have an ''Implantable Devices Charged to Patients'' CCR, the median was 0.3911, compared with a median hospital-wide CCR of 0.2035.

b. CY 2017 Policy

In the CY 2017 OPPS/ASC proposed rule (81 FR 45654), we proposed to use the more specific ''Implantable Devices Charged to Patients'' CCR instead of the less specific average hospital-wide CCR to calculate transitional pass-through payments for devices, beginning with device pass-through payments in CY 2017. When the CCR for the ''Implantable Devices Charged to Patients'' CCR is not available for a particular hospital, we would continue to use the average CCR across all outpatient departments to calculate pass-through payments. We believe using the ''Implantable Devices Charged to Patients'' CCR will provide more accurate pass-through payments for most device pass-through payment recipients and will further mitigate the effects of charge compression. We invited public comments on this proposal.

Comment: Many commenters, including MedPAC, supported the proposal. Commenters generally agreed that use of the ''Implantable Devices Charged to Patients'' CCR would result in more accurate measurement of costs for pass-through medical devices, by reducing the effects of charge compression when applying the hospital-wide CCR.

Response: We appreciate the commenters' support.

Comment: One commenter suggested that CMS modify the proposal to allow use of the ''Medical Supplies Charged to Patients'' CCR, if the hospital does not have an ''Implantable Devices Charged to Patients'' CCR. The commenter stated that this CCR would be a more accurate cost calculation than the hospital-wide CCR.

Response: In the FY 2009 IPPS final rule (73 FR 48458 through 48467), we created a cost center for ''Medical Supplies Charged to Patients,'' which generally includes low cost supplies, and another cost center for ''Implantable Devices Charged to Patients,'' which generally includes high-cost implantable devices. This change was in response to a Research Triangle Institute, International (RTI) study that was discussed in the FY 2009 IPPS final rule and which determined that there was charge compression in both the IPPS and the OPPS cost estimation of expensive and inexpensive medical supplies. By splitting medical supplies and implantable devices into two cost centers, some of the effects of charge compression were mitigated. We note that the intent of the ''Medical Supplies Charged to Patients'' CCR is to capture the costs and charges for low cost supplies which would not include implantable devices. Accordingly, in the absence of an ''Implantable Devices Charged to Patients'' CCR, we believe that the hospital-wide CCR would be an appropriate alternative since the hospital-wide CCR should reflect any implantable device costs that were incurred.

Comment: One commenter stated that providers who have not complied with the requirement to create an ''Implantable Devices Charged to Patients'' cost center should not receive any indirect payment benefits from their noncompliance.

Response: We note that we provide some flexibility in how hospitals address their cost reporting. As noted in the CY 2010 OPPS/ASC final rule with comment period (74 FR 60344), ''We typically do not specify a revenue-code-to-cost center crosswalk that hospitals must adopt to prepare their cost reporting, recognizing hospitals' need to interpret . . . cost reporting requirements within the context of their own financial systems.''

After consideration of the public comments we received, we are finalizing, without modification, our proposal to use the ''Implantable Devices Charged to Patients'' CCR instead of the average hospital-wide CCR to calculate transitional pass-through payments for devices, beginning with device pass-through payments in CY 2017. If the CCR for the ''Implantable Devices Charged to Patients'' CCR is not available for a particular hospital, we will instead use the average hospital-wide CCR to calculate pass-through payments.

6. Provisions for Reducing Transitional Pass-Through Payments To Offset Costs Packaged Into APC Groups

a. Background

Section 1833(t)(6)(D)(ii) of the Act sets the amount of additional pass-through payment for an eligible device as the amount by which the hospital's charges for a device, adjusted to cost (the cost of the device), exceeds the portion of the otherwise applicable Medicare outpatient department fee schedule amount (the APC payment amount) associated with the device. We have an established policy to estimate the portion of each APC payment rate that could reasonably be attributed to the cost of the associated devices that are eligible for pass-through payments (66 FR 59904) for purposes of estimating the portion of the otherwise applicable APC payment amount associated with pass-through devices. For eligible device categories, we deduct an amount that reflects the portion of the APC payment amount that we determine is associated with the cost of the device, defined as the device APC offset amount, from the charges adjusted to cost for the device, as provided by section 1833(t)(6)(D)(ii) of the Act, to determine the pass-through payment amount for the eligible device. We have an established methodology to estimate the portion of each APC payment rate that could reasonably be attributed to the cost of an associated device eligible for pass-through payment, using claims data from the period used for the most recent recalibration of the APC rates (72 FR 66751 through 66752). In the unusual case where the device offset amount exceeds the device pass-through payment amount, the regular APC rate would be paid and the pass-through payment would be $0.

b. CY 2017 Policy

In the CY 2017 OPPS/ASC proposed rule (81 FR 45654), for CY 2017, we proposed to calculate the portion of the otherwise applicable Medicare OPD fee schedule amount, for each device-intensive procedure payment rate that can reasonably be attributed to (that is, reflect) the cost of an associated device (the device offset amount) at the HCPCS code level rather than at the APC level (which is an average of all codes assigned to an APC). We refer readers to section IV.B. of the proposed rule and of this final rule with comment period for a discussion of this proposal. Otherwise, as stated in the proposed rule, we will continue our established practice of reviewing each new pass-through device category to determine whether device costs associated with the new category replace device costs that are already packaged into the device implantation procedure. If device costs that are packaged into the procedure are related to the new category, then according to our established practice we will deduct the device offset amount from the pass-through payment for the device

category. The list of device offsets for all device procedures is posted on the CMS Web site at: *http://www.cms.gov/Medicare/Medicare-Fee-for-Service-Payment/HospitalOutpatientPPS/index.html*.

We are finalizing, without modification, our proposal to calculate the portion of the otherwise applicable Medicare OPD fee schedule amount for each device-intensive procedure payment rate that can be reasonably attributed to (that is, reflect) the cost of an associated device at the HCPCS code level rather than at the APC level. We refer readers to section IV.B. of this final rule with comment period for a discussion of the proposal to calculate device offsets at the HCPCS level. Otherwise, we will continue our established practice of reviewing each new pass-through device category to determine whether device costs associated with the new category replace device costs that are already packaged into the device implantation procedure. If device costs that are packaged into the procedure are related to the new category, then according to our established practice, we will deduct the device offset amount from the pass-through payment for the device category. The list of device offsets for all device procedures will be posted on the CMS Web site at: *http://www.cms.gov/Medicare/Medicare-Fee-for-Service-Payment/HospitalOutpatientPPS/index.html*.

B. Device-Intensive Procedures

1. Background

Under the OPPS, device-intensive APCs are defined as those APCs with a device offset greater than 40 percent (79 FR 66795). In assigning device-intensive status to an APC, the device costs of all of the procedures within the APC are calculated and the geometric mean device offset of all of the procedures must exceed 40 percent. Almost all of the procedures assigned to device-intensive APCs utilize devices, and the device costs for the associated HCPCS codes exceed the 40-percent threshold. The no cost/full credit and partial credit device policy (79 FR 66872 through 66873) applies to device-intensive APCs and is discussed in detail in section IV.B.4. of this final rule with comment period. A related device policy is the requirement that certain procedures assigned to device-intensive APCs require the reporting of a device code on the claim (80 FR 70422). For further background information on the device-intensive APC policy, we refer readers to the CY 2016 OPPS/ASC final rule with comment period (80 FR 70421 through 70426).

2. HCPCS Code-Level Device-Intensive Determination

As stated above, currently the device-intensive methodology assigns device-intensive status to all procedures requiring the implantation of a device, which are assigned to an APC with a device offset greater than 40 percent. Historically, the device-intensive designation has been at the APC level and applied to the applicable procedures within that given APC. In the CY 2017 OPPS/ASC proposed rule (81 FR 45654), for CY 2017, we proposed to modify the methodology for assigning device-intensive status. Specifically, for CY 2017, we proposed to assign device-intensive status to all procedures that require the implantation of a device and have an individual HCPCS code-level device offset of greater than 40 percent, regardless of the APC assignment, as we no longer believe that device-intensive status should be based on APC assignment because APC groupings of clinically similar procedures do not necessarily factor in device cost similarity. In 2016, we restructured many of the APCs, and this resulted in some procedures with significant device costs not being assigned device-intensive status because they were not assigned to a device-intensive APC. Under our proposal, all procedures with significant device costs (defined as a device offset of more than 40 percent) would be assigned device-intensive status, regardless of their APC placement. Also, we believe that a HCPCS code-level device offset would, in most cases, be a better representation of a procedure's device cost than an APC-wide average device offset based on the average device offset of all of the procedures assigned to an APC. Unlike a device offset calculated at the APC level, which is a weighted average offset for all devices used in all of the procedures assigned to an APC, a HCPCS code-level device offset is calculated using only claims for a single HCPCS code. We believe that such a methodological change would result in a more accurate representation of the cost attributable to implantation of a high-cost device, which would ensure consistent device-intensive designation of procedures with a significant device cost. Further, we believe a HCPCS code-level device offset would remove inappropriate device-intensive status to procedures without a significant device cost but which are granted such status because of APC assignment.

Under our proposal, procedures that have an individual HCPCS code-level device offset of greater than 40 percent would be identified as device-intensive procedures and would be subject to all the CY 2017 policies applicable to procedures assigned device-intensive status under our established methodology, including our policies on device edits and device credits. Therefore, under our proposal, all procedures requiring the implantation of a medical device and that have an individual HCPCS code-level device offset of greater than 40 percent would be subject to the device edit and no cost/full credit and partial credit device policies, discussed in sections IV.B.3. and IV.B.4. of the proposed rule, respectively. We proposed to amend the regulation at § 419.44(b)(2) to reflect that we would no longer be designating APCs as device-intensive, and instead would be designating procedures as device-intensive.

Comment: The majority of commenters supported the proposal to revise the device-intensive calculation methodology and calculate at the HCPCS code level rather than at the APC level. One commenter believed that device-intensive procedures should not be assigned to an APC that includes procedures that are not device-intensive. A few commenters asked that CMS provide further detail into how device offsets are calculated, and provide examples of how this proposed change might impact existing APCs for both OPPS and ASC payment prior to implementing. One commenter requested that CMS make further refinements to the methodology if needed to ensure the full breadth of implantable device and supply costs are being captured and recommended moving forward that CMS routinely release the device offset calculations with each year's OPPS/ASC proposed rule. Another commenter requested that CMS create two different device offsets based on differing calculations, with the proposed device offset methodology used to calculate a ''device offset for device intensive policies'' (which would be used to determine if a procedure is device intensive or not) and an alternate methodology used to calculate a ''device offset for pass-through payment policy'' (which would be used to calculate the portion of the otherwise applicable Medicare OPD fee schedule amount for device pass-through status).

Response: We appreciate the commenters' support. We disagree with the commenter's belief that device-intensive procedures should not be assigned to an APC that includes procedures that are not device-intensive. Under our proposed policy, the APC placement of a device-intensive

procedure will have no bearing on the procedure's device-intensive designation. The device offset is the estimated portion of the payment for a procedure that is attributable to the device. We remind commenters that the list of device offsets for all device procedures is posted on the CMS Web site at: *http://www.cms.gov/Medicare/Medicare-Fee-for-Service-Payment/HospitalOutpatientPPS/index.html*. In response to the request to create an additional device offset for pass-through payment policy, in addition to a device offset based on the proposed device offset methodology, we do not see the need for the creation of a second device offset. We believe that a device offset calculated based on the proposed device offset methodology is appropriate and an accurate proxy for a procedure's device costs when calculating the portion of the otherwise applicable Medicare OPD fee schedule amount.

After consideration of the public comments we received, we are finalizing our proposal, without modification, for CY 2017, to assign device-intensive status to all procedures that require the implantation of a device and have an individual HCPCS code-level device offset of greater than 40 percent, regardless of the APC assignment.

In addition, for new HCPCS codes describing procedures requiring the implantation of medical devices that do not yet have associated claims data, we proposed to apply device-intensive status with a default device offset set at 41 percent until claims data are available to establish the HCPCS code-level device offset for the procedures. This default device offset amount of 41 percent would not be calculated from claims data; instead it would be applied as a default until claims data are available upon which to calculate an actual device offset for the new code. The purpose of applying the 41 percent default device offset to new codes that describe procedures that implant medical devices would be to ensure ASC access for new procedures until claims data become available. However, as stated in the proposed rule (81 FR 45655), in certain rare instances, for example, in the case of a very expensive implantable device, we may temporarily assign a higher offset percentage if warranted by additional information such as pricing data from a device manufacturer. Once claims data are available for a new procedure requiring the implantation of a medical device, device-intensive status would be applied to the code if the HCPCS code-level device offset is greater than 40 percent, according to our proposed policy of determining device-intensive status by calculating the HCPCS code-level device offset. The full listing of proposed device-intensive procedures was included in a new Addendum P to the proposed rule (which is available via the Internet on the CMS Web site).

Comment: A number of commenters supported CMS' proposal to apply a default device offset of at least 41 percent to new implant procedures with the possibility for higher device offset if supported by device costs. Some commenters in support of the proposal asked that CMS specify how additional information can be submitted, including the deadline for submission, the type of information that can be submitted and who it can be submitted by to have CMS consider a higher offset percentage for a new implant procedure. One commenter did not support the proposal under which every new HCPCS code that describes procedures requiring implantation of a device should be assigned a default device offset of 41 percent. This commenter stated that CMS should ensure that all new procedures requiring implantation of a device require use of a device that is described by a device HCPCS code that satisfies the device edit for device intensive procedures, before assigning a default device offset of 41 percent and recognizing the new implantation procedure as a device intensive procedure.

Response: We appreciate the commenters' support. Additional information for our consideration of an offset percentage higher than the default of 41 percent for new HCPCS codes describing procedures requiring the implantation (or in some cases the insertion) of a medical device that do not yet have associated claims data, such as pricing data or invoices from a device manufacturer, should be directed to the Division of Outpatient Care, Mail Stop C4–01–26, Centers for Medicare and Medicaid Services, 7500 Security Boulevard, Baltimore, MD 21244–1850, or electronically at *outpatientpps@cms.hhs.gov*. Additional information can be submitted prior to issuance of an OPPS/ASC proposed rule or as a public comment in response to an issued OPPS/ASC proposed rule. Device offset percentages will be set in each year's final rule. In response to the commenter who did not support this proposal, we note that we are creating a new category HCPCS C-code (described in section IV.B.3. of this final rule with comment period) for providers to report when a device implantation or insertion procedure uses a device that is not described by a specific Level II HCPCS C-code so that these device intensive procedures can satisfy the device edit policy.

After consideration of the public comments we received, we are finalizing our proposal, without modification, for CY 2017 to apply device-intensive status with a default device offset set at 41 percent for new HCPCS codes describing procedures requiring the implantation of a medical device that do not yet have associated claims data until claims data are available to establish the HCPCS code-level device offset for the procedures. For CY 2017, we also are finalizing our proposal, without modification, that in certain rare instances, we may temporarily assign a higher offset percentage if warranted by additional information.

3. Changes to the Device Edit Policy

In the CY 2015 OPPS/ASC final rule with comment period (79 FR 66795), we finalized a policy and implemented claims processing edits that require any of the device codes used in the previous device-to-procedure edits to be present on the claim whenever a procedure code assigned to any of the APCs listed in Table 5 of the CY 2015 OPPS/ASC final rule with comment period (the CY 2015 device-dependent APCs) is reported on the claim. In addition, in the CY 2016 OPPS/ASC final rule with comment period (80 FR 70422), we modified our previously existing policy and applied the device coding requirements exclusively to procedures that require the implantation of a device that are assigned to a device-intensive APC. In the CY 2016 OPPS/ASC final rule with comment period, we also finalized our policy that the claims processing edits are such that any device code, when reported on a claim with a procedure assigned to a device-intensive APC (listed in Table 42 of the CY 2016 OPPS/ASC final rule with comment period (80 FR 70422)) will satisfy the edit.

As discussed in the CY 2017 OPPS/ASC proposed rule (81 FR 45655), as part of our proposal described in section IV.B.2. of the proposed rule to no longer recognize device-intensive APCs and instead recognize device-intensive procedures based on their individual HCPCS code-level device offset being greater than 40 percent, for CY 2017, we proposed to modify our existing device edit policy. Specifically, for CY 2017 and subsequent years, we proposed to apply the CY 2016 device coding requirements to the newly defined (individual HCPCS code-level device offset greater than 40 percent) device-intensive procedures. In addition, we proposed that any device code, when reported on a claim with a device-

intensive procedure, would satisfy the edit.

Comment: A number of commenters urged CMS to restore the specific device-to-procedure and procedure-to-device edits that CMS used to apply and not keep the current ''any device'' code policy. One commenter asked that CMS require hospitals to report all devices, not just those associated with procedures that CMS has already determined to be device intensive. Another commenter requested that CMS create a miscellaneous C-code for providers to report when a device used does not have a specific Level II HCPCS Category C-code.

Response: As we stated in the CY 2015 OPPS/ASC final rule with comment period (79 FR 66794), we continue to believe that the elimination of device-to-procedure edits and procedure-to-device edits is appropriate due to the experience hospitals now have in coding and reporting these claims fully. More specifically, for the more costly devices, we believe the C–APCs will reliably reflect the cost of the device if charges for the device are included anywhere on the claim. We remind commenters that, under our current policy, hospitals are still expected to adhere to the guidelines of correct coding and append the correct device code to the claim when applicable. We also remind commenters that, as with all other items and services recognized under the OPPS, we expect hospitals to code and report their costs appropriately, regardless of whether there are claims processing edits in place. We agree with the commenter that we should create a miscellaneous HCPCS C-code for providers to report when a device used does not have a specific Level II HCPCS C-code. Therefore, effective January 1, 2017, we are creating HCPCS code C1889 (Implantable/insertable device for device intensive procedure, not otherwise classified) to recognize devices implanted or inserted during a device-intensive procedure that are not described by a specific Level II HCPCS Category C-code.

After consideration of the public comments we received, we are finalizing our proposal for CY 2017 and subsequent years to apply the CY 2016 device coding requirements to the newly defined (individual HCPCS code-level device offset greater than 40 percent) device-intensive procedures. For CY 2017 and subsequent years, we also are finalizing our proposal that any device code, when reported on a claim with a device-intensive procedure, will satisfy the edit. In addition, we are creating HCPCS code C1889 to recognize devices furnished during a device intensive procedure that are not described by a specific Level II HCPCS Category C-code. Reporting HCPCS code C1889 with a device intensive procedure will satisfy the edit requiring a device code to be reported on a claim with a device-intensive procedure.

4. Adjustment to OPPS Payment for No Cost/Full Credit and Partial Credit Devices

a. Background

To ensure equitable OPPS payment when a hospital receives a device without cost or with full credit, in CY 2007, we implemented a policy to reduce the payment for specified device-dependent APCs by the estimated portion of the APC payment attributable to device costs (that is, the device offset) when the hospital receives a specified device at no cost or with full credit (71 FR 68071 through 68077). Hospitals were instructed to report no cost/full credit device cases on the claim using the ''FB'' modifier on the line with the procedure code in which the no cost/full credit device is used. In cases in which the device is furnished without cost or with full credit, hospitals were instructed to report a token device charge of less than $1.01. In cases in which the device being inserted is an upgrade (either of the same type of device or to a different type of device) with a full credit for the device being replaced, hospitals were instructed to report as the device charge the difference between the hospital's usual charge for the device being implanted and the hospital's usual charge for the device for which it received full credit. In CY 2008, we expanded this payment adjustment policy to include cases in which hospitals receive partial credit of 50 percent or more of the cost of a specified device. Hospitals were instructed to append the ''FC'' modifier to the procedure code that reports the service provided to furnish the device when they receive a partial credit of 50 percent or more of the cost of the new device. We refer readers to the CY 2008 OPPS/ASC final rule with comment period for more background information on the ''FB'' and ''FC'' modifiers payment adjustment policies (72 FR 66743 through 66749).

In the CY 2014 OPPS/ASC final rule with comment period (78 FR 75005 through 75007), beginning in CY 2014, we modified our policy of reducing OPPS payment for specified APCs when a hospital furnishes a specified device without cost or with a full or partial credit. For CY 2013 and prior years, our policy had been to reduce OPPS payment by 100 percent of the device offset amount when a hospital furnishes a specified device without cost or with a full credit and by 50 percent of the device offset amount when the hospital receives partial credit in the amount of 50 percent or more of the cost for the specified device. For CY 2014, we reduced OPPS payment, for the applicable APCs, by the full or partial credit a hospital receives for a replaced device. Specifically, under this modified policy, hospitals are required to report on the claim the amount of the credit in the amount portion for value code ''FD'' (Credit Received from the Manufacturer for a Replaced Medical Device) when the hospital receives a credit for a replaced device that is 50 percent or greater than the cost of the device. For CY 2014, we also limited the OPPS payment deduction for the applicable APCs to the total amount of the device offset when the ''FD'' value code appears on a claim. For CY 2015, we continued our existing policy of reducing OPPS payment for specified APCs when a hospital furnishes a specified device without cost or with a full or partial credit and to use the three criteria established in the CY 2007 OPPS/ASC final rule with comment period (71 FR 68072 through 68077) for determining the APCs to which our CY 2015 policy will apply (79 FR 66872 through 66873). In the CY 2016 OPPS/ASC final rule with comment period (80 FR 70424), we finalized our policy to no longer specify a list of devices to which the OPPS payment adjustment for no cost/full credit and partial credit devices would apply and instead apply this APC payment adjustment to all replaced devices furnished in conjunction with a procedure assigned to a device-intensive APC when the hospital receives a credit for a replaced specified device that is 50 percent or greater than the cost of the device.

b. Policy for CY 2017

In the CY 2017 OPPS/ASC proposed rule (81 FR 45656), for CY 2017, we proposed modifications to our current policy for reducing OPPS payment by the full or partial credit a provider receives for a replaced device, in conjunction with our proposal above to recognize the newly defined (individual HCPCS level device offset greater than 40 percent) device-intensive procedures. For CY 2017 and subsequent years, we proposed to reduce OPPS payment for specified procedures when a hospital furnishes a specified device without cost or with a full or partial credit. Specifically, for CY 2017, we proposed to continue to reduce the OPPS

payment, for the device-intensive procedures, by the full or partial credit a provider receives for a replaced device. Under this proposed policy, hospitals would continue to be required to report on the claim the amount of the credit in the amount portion for value code ''FD'' when the hospital receives a credit for a replaced device that is 50 percent or greater than the cost of the device.

For CY 2017 and subsequent years, we also proposed to determine which procedures our proposed policy would apply to using three criteria analogous to the three criteria established in the CY 2007 OPPS/ASC final rule with comment period for determining the APCs to which our existing policy applies (71 FR 68072 through 68077).

Specifically, for CY 2017 and subsequent years, we proposed to use the following three criteria for determining the procedures to which our proposed policy would apply: (1) All procedures must involve implantable devices that would be reported if device insertion procedures were performed; (2) the required devices must be surgically inserted or implanted devices that remain in the patient's body after the conclusion of the procedure (at least temporarily); and (3) the procedure must be device-intensive; that is, the device offset amount must be significant, which is defined as exceeding 40 percent of the procedure's mean cost. We continue to believe these criteria are appropriate because no-cost devices and device credits are likely to be associated with particular cases only when the device must be reported on the claim and is of a type that is implanted and remains in the body when the beneficiary leaves the hospital. We believe that the reduction in payment is appropriate only when the cost of the device is a significant part of the total cost of the procedure into which the device cost is packaged, and that the 40-percent threshold is a reasonable definition of a significant cost. As noted earlier in this section, procedures with a device offset that exceed the 40-percent threshold are called device-intensive procedures.

Comment: One commenter recommended that CMS reinstate the procedure code list that is subject to the no cost/full credit and partial credit devices.

Response: As stated in the CY 2016 OPPS/ASC final rule with comment period (80 FR 70424), we no longer believe it is necessary to restrict the application of our policy to reduce the OPPS payment by the full or partial credit a provider receives for a replaced device to a specific list of devices. Therefore, we no longer believe it is necessary to specify a list of devices to which the OPPS payment adjustment for no cost/full credit and partial credit devices would apply.

After consideration of the public comments we received, for CY 2017, we are finalizing our proposed modifications to our current policy for reducing OPPS payment by the full or partial credit a provider receives for a replaced device, in conjunction with our finalized policy to recognize the newly defined (individual HCPCS level device offset greater than 40 percent) device-intensive procedures. Specifically, for CY 2017, we are finalizing our proposal to continue to reduce the OPPS payment, for the device-intensive procedures, by the full or partial credit a provider receives for a replaced device. In addition, for CY 2017 and subsequent years, we are finalizing our proposal to use the following three criteria for determining the procedures to which our final policy will apply: (1) All procedures must involve implantable devices that would be reported if device insertion procedures were performed; (2) the required devices must be surgically inserted or implanted devices that remain in the patient's body after the conclusion of the procedure (at least temporarily); and (3) the procedure must be device intensive; that is, the device offset amount must be significant, which is defined as exceeding 40 percent of the procedure's mean cost.

5. Payment Policy for Low-Volume Device-Intensive Procedures

For CY 2016, we used our equitable adjustment authority under section 1833(t)(2)(E) of the Act and used the median cost (instead of the geometric mean cost per our standard methodology) to calculate the payment rate for the implantable miniature telescope procedure described by CPT code 0308T (Insertion of ocular telescope prosthesis including removal of crystalline lens or intraocular lens prosthesis), which is the only code assigned to APC 5494 (Level 4 Intraocular Procedures) (80 FR 70388). We note that, as stated in the CY 2017 OPPS/ASC proposed rule (81 FR 45656), we proposed to reassign the procedure described by CPT code 0308T to APC 5495 (Level 5 Intraocular Procedures) for CY 2017, but it would be the only procedure code assigned to APC 5495. The payment rates for a procedure described by CPT code 0308T (including the predecessor HCPCS code C9732) were $15,551 in CY 2014, $23,084 in CY 2015, and $17,551 in CY 2016. The procedure described by CPT code 0308T is a high-cost device-intensive surgical procedure that has a very low volume of claims (in part because most of the procedures described by CPT code 0308T are performed in ASCs), and we believe that the median cost is a more appropriate measure of the central tendency for purposes of calculating the cost and the payment rate for this procedure because the median cost is impacted to a lesser degree than the geometric mean cost by more extreme observations. We stated that, in future rulemaking, we would consider proposing a general policy for the payment rate calculation for very low-volume device-intensive APCs (80 FR 70389).

For CY 2017, we proposed a payment policy for low-volume device-intensive procedures that is similar to the policy applied to the procedure described by CPT code 0308T in CY 2016. In particular, we proposed that the payment rate for any device-intensive procedure that is assigned to a clinical APC with fewer than 100 total claims for all procedures in the APC be calculated using the median cost instead of the geometric mean cost, for the reasons described above for the policy applied to the procedure described by CPT code 0308T in CY 2016. We believe that this approach will help to mitigate to some extent significant year-to-year payment rate fluctuations while preserving accurate claims data-based payment rates for low-volume device-intensive procedures. For CY 2017, this policy would only apply to a procedure described by CPT code 0308T in APC 5495 because this APC is the only APC containing a device-intensive procedure with less than 100 total claims in the APC. The CY 2017 proposed rule median cost for the procedure described by CPT code 0308T was approximately $17,965 (the median cost was incorrectly stated in the proposed rule as $15,567). The proposed CY 2017 payment rate (calculated using the median cost and the claims that reported the device consistent with our device edit policy for device intensive procedures) was approximately $17,189. We invited public comments on this proposal.

Comment: The majority of commenters supported the proposal to base payment on the median cost instead of the geometric mean cost for any device-intensive procedure that is assigned to an APC with fewer than 100 total claims (for all of the services assigned to the APC). One commenter recommended that CMS consider whether refinements to the low-volume, device-intensive procedure policy are

appropriate in future rulemaking, such as using the claims volume at the HCPCS level rather than the APC level.

Response: We appreciate the commenters' support. At this time, we believe it is only appropriate to calculate the payment rate using median cost instead of the geometric mean for a device-intensive procedure that is assigned to a clinical APC with fewer than 100 total claims for all procedures in the APC.

After consideration of the public comments we received, we are finalizing our proposal, without modification, that the payment rate for any device-intensive procedure that is assigned to a clinical APC with fewer than 100 total claims for all procedures in the APC be calculated using the median cost instead of the geometric mean cost. The CY 2017 final rule geometric mean cost for the procedure described by CPT code 0308T (based on 19 claims containing the device HCPCS C-code in accordance with the device-intensive edit policy) is approximately $21,302, and the median cost is approximately $19,521. The final CY 2017 payment rate (calculated using the median cost) is approximately $18,984.

V. OPPS Payment Changes for Drugs, Biologicals, and Radiopharmaceuticals

A. OPPS Transitional Pass-Through Payment for Additional Costs of Drugs, Biologicals, and Radiopharmaceuticals

1. Background

Section 1833(t)(6) of the Act provides for temporary additional payments or ''transitional pass-through payments'' for certain drugs and biologicals. Throughout this final rule with comment period, the term ''biological'' is used because this is the term that appears in section 1861(t) of the Act. ''Biological'' as used in this final rule with comment period includes (but is not necessarily limited to) ''biological product'' or ''biologic'' as defined in the Public Health Service Act. As enacted by the Medicare, Medicaid, and SCHIP Balanced Budget Refinement Act of 1999 (BBRA) (Pub. L. 106–113), this pass-through payment provision requires the Secretary to make additional payments to hospitals for: Current orphan drugs, as designated under section 526 of the Federal Food, Drug, and Cosmetic Act; current drugs and biologicals and brachytherapy sources used in cancer therapy; and current radiopharmaceutical drugs and biologicals. ''Current'' refers to drugs or biologicals that are hospital outpatient services under Medicare Part B for which payment was made on the first date the hospital OPPS was implemented.

Transitional pass-through payments also are provided for certain ''new'' drugs and biologicals that were not being paid for as an HOPD service as of December 31, 1996 and whose cost is ''not insignificant'' in relation to the OPPS payments for the procedures or services associated with the new drug or biological. For pass-through payment purposes, radiopharmaceuticals are included as ''drugs.'' As required by statute, transitional pass-through payments for a drug or biological described in section 1833(t)(6)(C)(i)(II) of the Act can be made for a period of at least 2 years, but not more than 3 years, after the payment was first made for the product as a hospital outpatient service under Medicare Part B. CY 2017 pass-through drugs and biologicals and their designated APCs are assigned status indicator ''G'' in Addenda A and B to this final rule with comment period (which are available via the Internet on the CMS Web site).

Section 1833(t)(6)(D)(i) of the Act specifies that the pass-through payment amount, in the case of a drug or biological, is the amount by which the amount determined under section 1842(o) of the Act for the drug or biological exceeds the portion of the otherwise applicable Medicare OPD fee schedule that the Secretary determines is associated with the drug or biological. The methodology for determining the pass-through payment amount is set forth in regulations at 42 CFR 419.64. These regulations specify that the pass-through payment equals the amount determined under section 1842(o) of the Act minus the portion of the APC payment that CMS determines is associated with the drug or biological. Section 1847A of the Act establishes the average sales price (ASP) methodology, which is used for payment for drugs and biologicals described in section 1842(o)(1)(C) of the Act furnished on or after January 1, 2005. The ASP methodology, as applied under the OPPS, uses several sources of data as a basis for payment, including the ASP, the wholesale acquisition cost (WAC), and the average wholesale price (AWP). In this final rule with comment period, the term ''ASP methodology'' and ''ASP-based'' are inclusive of all data sources and methodologies described therein. Additional information on the ASP methodology can be found on the CMS Web site at: *http://www.cms.gov/Medicare/Medicare-Fee-for-Service-Part-B-Drugs/McrPartBDrugAvgSalesPrice/index.html*.

The pass-through application and review process for drugs and biologicals is explained on the CMS Web site at: *http://www.cms.gov/Medicare/Medicare-Fee-for-Service-Payment/HospitalOutpatientPPS/passthrough_payment.html*.

2. Policy Change To Make the Transitional Pass-Through Payment Period 3 Years for All Pass-Through Drugs, Biologicals, and Radiopharmaceuticals and Expire Pass-Through Status on a Quarterly Rather Than Annual Basis

As required by statute, transitional pass-through payments for a drug or biological described in section 1833(t)(6)(C)(i)(II) of the Act can be made for a period of at least 2 years, but not more than 3 years, after the payment was first made for the product as a hospital outpatient service under Medicare Part B. Our current policy is to accept pass-through applications on a quarterly basis and to begin pass-through payments for new pass-through drugs and biologicals on a quarterly basis through the next available OPPS quarterly update after the approval of a product's pass-through status. However, we expire pass-through status for drugs and biologicals on an annual basis through notice-and-comment rulemaking (74 FR 60480). This means that because the 2-year to 3-year pass-through payment eligibility period starts on the date of first pass-through payment under 42 CFR 419.64(c)(2), the duration of pass-through eligibility for a particular drug or biological will depend upon when during a year the applicant applies for pass-through status. Under the current policy, a new pass-through drug or biological with pass-through status effective on January 1 would receive 3 years of pass-through status; a pass-through drug with pass-through status effective on April 1 would receive 2 years and 3 quarters of pass-through status; a pass-through drug with pass-through status effective on July 1 would receive 2 and ½ years of pass-through status; and a pass-through drug with pass-through status effective on October 1 would receive 2 years and 3 months (a quarter) of pass-through status.

In the CY 2017 OPPS/ASC proposed rule (81 FR 45657), we proposed, beginning with pass-through drugs and biologicals newly approved in CY 2017 and subsequent calendar years, to allow for a quarterly expiration of pass-through payment status for drugs and biologicals to afford a pass-through period that is as close to a full 3 years as possible for all pass-through payment drugs, biologicals, and radiopharmaceuticals. This proposed change would eliminate the variability

of the pass-through payment eligibility period, which currently varies based on the timing of the particular application, as we now believe that the timing of a pass-through payment application should not determine the duration of pass-through payment status. For example, for a drug with pass-through status first effective on April 1, 2017, pass-through status would expire on March 31, 2020. This approach would allow for the maximum pass-through period for each pass-through drug without exceeding the statutory limit of 3 years. We invited public comments on this proposal.

Comment: Several commenters supported CMS' proposal to expire pass-through status and payment for pass-through drugs on a quarterly basis rather than an annual basis such that pass-through status would be as close as possible to 3 years for all pass-through drugs and biologicals. Some commenters recommended that CMS apply the proposed policy to all drugs with pass-through payment status in CY 2017 to prevent disparate treatment of such drugs based on their pass-through approval date.

Response: We appreciate commenters' support. In response to commenters' recommendation to expire pass-through status and payment for pass-through drugs on a quarterly basis rather than an annual basis for all drugs with pass-through payment status in CY 2017, we note that the annual expiration of pass-through payment status for all drugs currently assigned pass-through payment status under the OPPS was finalized in previous years' OPPS/ASC rulemaking and was not proposed to be altered in our CY 2017 proposal.

After consideration of the public comments we received, we are finalizing our proposal, without modification, beginning with pass-through drugs and biologicals newly approved in CY 2017 and subsequent calendar years, to allow for a quarterly expiration of pass-through payment status for drugs and biologicals to afford a pass-through period that is as close to a full 3 years as possible for all pass-through drugs, biologicals, and radiopharmaceuticals.

3. Drugs and Biologicals With Expiring Pass-Through Payment Status in CY 2016

In the CY 2017 OPPS/ASC proposed rule (81 FR 45657), we proposed that the pass-through status of 15 drugs and biologicals would expire on December 31, 2016, as listed in Table 13 of the proposed rule (81 FR 45658). All of these drugs and biologicals will have received OPPS pass-through payment for at least 2 years and no more than 3 years by December 31, 2016. These drugs and biologicals were approved for pass-through payment status on or before January 1, 2015. With the exception of those groups of drugs and biologicals that are always packaged when they do not have pass-through payment status (specifically, anesthesia drugs; drugs, biologicals, and radiopharmaceuticals that function as supplies when used in a diagnostic test or procedure (including diagnostic radiopharmaceuticals, contrast agents, and stress agents); and drugs and biologicals that function as supplies when used in a surgical procedure), our standard methodology for providing payment for drugs and biologicals with expiring pass-through payment status in an upcoming calendar year is to determine the product's estimated per day cost and compare it with the OPPS drug packaging threshold for that calendar year (which is $110 for CY 2017), as discussed further in section V.B.2. of this final rule with comment period. In the CY 2017 OPPS/ASC proposed rule (81 FR 45658), we proposed that if the estimated per day cost for the drug or biological is less than or equal to the applicable OPPS drug packaging threshold, to package payment for the drug or biological into the payment for the associated procedure in the upcoming calendar year. If the estimated per day cost of the drug or biological is greater than the OPPS drug packaging threshold, we proposed to provide separate payment at the applicable relative ASP-based payment amount (which was proposed at ASP+6 percent for CY 2017, and is finalized at ASP+6 percent for CY 2017, as discussed further in section V.B.3. of this final rule with comment period).

We did not receive any public comments on this proposal. Therefore, we are finalizing our proposal, without modification, to expire the pass-through payment status of the 15 drugs and biologicals listed below in Table 35 on December 31, 2016.

TABLE 35—DRUGS AND BIOLOGICALS FOR WHICH PASS-THROUGH PAYMENT STATUS EXPIRES DECEMBER 31, 2016

CY 2017 HCPCS code	CY 2017 long descriptor	Final CY 2017 status indicator	Final CY 2017 APC
C9497	Loxapine, inhalation powder, 10 mg	K	9497
J1322	Injection, elosulfase alfa, 1 mg	K	1480
J1439	Injection, ferric carboxymaltose, 1 mg	N	N/A
J1447	Injection, TBO-Filgrastim, 1 microgram	N	N/A
J3145	Injection, testosterone undecanoate, 1 mg	N	N/A
J3380	Injection, vedolizumab, 1 mg	K	1489
J7181	Injection, factor xiii a-subunit, (recombinant), per iu	N	N/A
J7200	Factor ix (antihemophilic factor, recombinant), Rixubus, per i.u	N	N/A
J7201	Injection, factor ix, fc fusion protein (recombinant), per iu	N	N/A
J7205	Injection, factor viii fc fusion (recombinant), per iu	K	1656
J7508	Tacrolimus, extended release, (astagraf xl), oral, 0.1 mg	N	N/A
J9301	Injection, obinutuzumab, 10 mg	N	N/A
J9308	Injection, ramucirumab, 5 mg	K	1488
J9371	Injection, Vincristine Sulfate Liposome, 1 mg	K	1466
Q4121	Theraskin, per square centimeter	N	N/A

The final packaged or separately payable status of each of these drugs or biologicals is listed in Addendum B to this final rule with comment period (which is available via the Internet on the CMS Web site).

4. Drugs, Biologicals, and Radiopharmaceuticals With New or Continuing Pass-Through Payment Status in CY 2017

In the CY 2017 OPPS/ASC proposed rule (81 FR 45658), we proposed to continue pass-through payment status in CY 2017 for 38 drugs and biologicals. None of these drugs and biologicals will have received OPPS pass-through payment for at least 2 years and no more than 3 years by December 31, 2016. These drugs and biologicals, which were approved for pass-through status between January 1, 2015, and July 1, 2016, were listed in Table 14 of the proposed rule (81 FR 45659). The APCs and HCPCS codes for these drugs and biologicals approved for pass-through payment status through July 1, 2016 were assigned status indicator ''G'' in Addenda A and B to the proposed rule (which are available via the Internet on the CMS Web site).

Section 1833(t)(6)(D)(i) of the Act sets the amount of pass-through payment for pass-through drugs and biologicals (the pass-through payment amount) as the difference between the amount authorized under section 1842(o) of the Act and the portion of the otherwise applicable OPD fee schedule that the Secretary determines is associated with the drug or biological. For CY 2017, we proposed to continue to pay for pass-through drugs and biologicals at ASP+6 percent, equivalent to the payment rate these drugs and biologicals would receive in the physician's office setting in CY 2017. We proposed that a $0 pass-through payment amount would be paid for pass-through drugs and biologicals under the CY 2017 OPPS because the difference between the amount authorized under section 1842(o) of the Act, which was proposed at ASP+6 percent, and the portion of the otherwise applicable OPD fee schedule that the Secretary determines is appropriate, which was proposed at ASP+6 percent, is $0.

In the case of policy-packaged drugs (which include the following: Anesthesia drugs; drugs, biologicals, and radiopharmaceuticals that function as supplies when used in a diagnostic test or procedure (including contrast agents; diagnostic radiopharmaceuticals, and stress agents); and drugs and biologicals that function as supplies when used in a surgical procedure), we proposed that their pass-through payment amount would be equal to ASP+6 percent for CY 2017 because, if not for their pass-through status, payment for these products would be packaged into the associated procedure.

In addition, we proposed to continue to update pass-through payment rates on a quarterly basis on the CMS Web site during CY 2017 if later quarter ASP submissions (or more recent WAC or AWP information, as applicable) indicate that adjustments to the payment rates for these pass-through drugs or biologicals are necessary. For a full description of this policy, we refer readers to the CY 2006 OPPS/ASC final rule with comment period (70 FR 68632 through 68635).

In CY 2017, as is consistent with our CY 2016 policy for diagnostic and therapeutic radiopharmaceuticals, we proposed to provide payment for both diagnostic and therapeutic radiopharmaceuticals that are granted pass-through payment status based on the ASP methodology. As stated earlier, for purposes of pass-through payment, we consider radiopharmaceuticals to be drugs under the OPPS. Therefore, if a diagnostic or therapeutic radiopharmaceutical receives pass-through payment status during CY 2017, we proposed to follow the standard ASP methodology to determine the pass-through payment rate that drugs receive under section 1842(o) of the Act, which was proposed at ASP+6 percent. If ASP data are not available for a radiopharmaceutical, we proposed to provide pass-through payment at WAC+6 percent, the equivalent payment provided to pass-through drugs and biologicals without ASP information. If WAC information also is not available, we proposed to provide payment for the pass-through radiopharmaceutical at 95 percent of its most recent AWP.

Comment: Several commenters supported CMS' proposal to continue to provide payment at ASP+6 percent for drugs, biologicals, contrast agents, and radiopharmaceuticals that are granted pass-through payment status. Some commenters requested that CMS provide an additional payment for radiopharmaceuticals that are granted pass-through payment status.

Response: We appreciate the commenters' support. Regarding the commenters' request that CMS provide an additional payment for radiopharmaceuticals that are granted pass-through payment status, we note that, for CY 2017, consistent with our CY 2016 payment policy for diagnostic and therapeutic radiopharmaceuticals, we proposed to provide payment for both diagnostic and therapeutic radiopharmaceuticals with pass-through payment status based on the ASP methodology. As stated earlier, the ASP methodology, as applied under the OPPS, uses several sources of data as a basis for payment, including the ASP, the WAC if the ASP is unavailable, and 95 percent of the radiopharmaceutical's most recent AWP if both the ASP and WAC are unavailable. For purposes of pass-through payment, we consider radiopharmaceuticals to be drugs under the OPPS. Therefore, if a diagnostic or therapeutic radiopharmaceutical receives pass-through payment status during CY 2017, we proposed to follow the standard ASP methodology to determine its pass-through payment rate under the OPPS to account for the acquisition and pharmacy overhead costs. We continue to believe that a single payment is appropriate for diagnostic radiopharmaceuticals with pass-through payment status in CY 2017, and that the payment rate of ASP+6 percent (or WAC or AWP if ASP is not available) is appropriate to provide payment for both a radiopharmaceutical's acquisition and pharmacy overhead costs. We refer readers to section V.B.3. of this final rule with comment period for further discussion of payment for therapeutic radiopharmaceuticals based on ASP information submitted by manufacturers. We also refer readers to the CMS Web site at: *https://www.cms.gov/Medicare/Medicare-Feefor-ServicePayment/HospitalOutpatientPPS/Hospital-Outpatient-Regulations-and-Notices-Items/CMS-1656-FC.html*.

After consideration of the public comments we received, we are finalizing our proposal to provide payment for drugs, biologicals, diagnostic and therapeutic radiopharmaceuticals, and contrast agents that are granted pass-through payment status based on the ASP methodology. If a diagnostic or therapeutic radiopharmaceutical receives pass-through payment status during CY 2017, we will follow the standard ASP methodology to determine the pass-through payment rate that drugs receive under section 1842(o) of the Act, which is ASP+6 percent. If ASP data are not available for a radiopharmaceutical, we will provide pass-through payment at WAC+6 percent, the equivalent payment provided to pass-through drugs and biologicals without ASP information. If WAC information also is not available, we will provide payment for the pass-through radiopharmaceutical at 95 percent of its most recent AWP. The 47

drugs and biologicals that continue to have pass-through payment status for CY 2017 or have been granted pass-through payment status as of January 2017 are shown in Table 36 below.

TABLE 36—DRUGS AND BIOLOGICALS WITH PASS-THROUGH PAYMENT STATUS IN CY 2017

CY 2016 HCPCS code	CY 2017 HCPCS code	CY 2017 long descriptor	CY 2017 status indicator	CY 2017 APC
A9586	A9586	Florbetapir f18, diagnostic, per study dose, up to 10 millicuries	G	1664
N/A	A9588	Fluciclovine f-18, diagnostic, 0.1 mCi	G	9052
N/A	A9587	Gallium Ga-68, dotatate, diagnostic, 1 mCi	G	9056
N/A	C9140	Injection, Factor VIII (antihemophilic factor, recombinant) (Afstyla), 1 I.U	G	9043
C9137	J7207	Injection, Factor VIII (antihemophilic factor, recombinant) PEGylated, 1 I.U	G	1844
C9138	J7209	Injection, Factor VIII (antihemophilic factor, recombinant) (Nuwiq), per i.u	G	1846
C9139	J7202	Injection, Factor IX, albumin fusion protein (recombinant), Idelvion, 1 i.u	G	9171
C9349	Q4172	PuraPly, and PuraPly Antimicrobial, any type, per square centimeter	G	1657
C9447	C9447	Injection, phenylephrine and ketorolac, 4 ml vial	G	1663
C9460	C9460	Injection, cangrelor, 1 mg	G	9460
C9461	A9515	Choline C 11, diagnostic, per study dose	G	9461
C9470	J1942	Injection, aripiprazole lauroxil, 1 mg	G	9470
C9471	J7322	Hyaluronan or derivative, Hymovis, for intra-articular injection, 1 mg	G	9471
C9472	J9325	Injection, talimogene laherparepvec, 1 million plaque forming units (PFU)	G	9472
C9473	J2182	Injection, mepolizumab, 1 mg	G	9473
C9474	J9205	Injection, irinotecan liposome, 1 mg	G	9474
C9475	J9295	Injection, necitumumab, 1 mg	G	9475
C9476	J9145	Injection, daratumumab, 10 mg	G	9476
C9477	J9176	Injection, elotuzumab, 1 mg	G	9477
C9478	J2840	Injection, sebelipase alfa, 1 mg	G	9478
C9479	J7342	Instillation, ciprofloxacin otic suspension, 6 mg	G	9479
C9480	J9352	Injection, trabectedin, 0.1 mg	G	9480
C9481	J2786	Injection, reslizumab, 1 mg	G	9481
C9482	C9482	Injection, sotalol hydrochloride, 1 mg	G	9482
C9483	C9483	Injection, atezolizumab, 10 mg	G	9483
N/A	J0570	Buprenorphine implant, 74.2 mg	G	9058
J0596	J0596	Injection, c-1 esterase inhibitor (human), Ruconest, 10 units	G	9445
J0695	J0695	Injection, ceftolozane 50 mg and tazobactam 25 mg	G	9452
J0875	J0875	Injection, dalbavancin, 5 mg	G	1823
J1833	J1833	Injection, isavuconazonium sulfate, 1 mg	G	9456
J2407	J2407	Injection, oritavancin, 10 mg	G	1660
J2502	J2502	Injection, pasireotide long acting, 1 mg	G	9454
J2547	J2547	Injection, peramivir, 1 mg	G	9451
J2860	J2860	Injection, siltuximab, 10 mg	G	9455
J3090	J3090	Injection, tedizolid phosphate, 1 mg	G	1662
N/A	J7179	Injection, von willebrand factor (recombinant), (Vonvendi), 1 i.u. vwf:rco	G	9059
J7313	J7313	Injection, fluocinolone acetonide intravitreal implant, 0.01 mg	G	9450
J7503	J7503	Tacrolimus, extended release, (envarsus xr), oral, 0.25 mg	G	1845
J8655	J8655	Netupitant (300 mg) and palonosetron (0.5 mg)	G	9448
J9032	J9032	Injection, belinostat, 10 mg	G	1658
J9039	J9039	Injection, blinatumomab, 1 mcg	G	9449
J9271	J9271	Injection, pembrolizumab, 1 mg	G	1490
J9299	J9299	Injection, nivolumab, 1 mg	G	9453
Q5101	Q5101	Injection, Filgrastim (G–CSF), Biosimilar, 1 microgram	G	1822
Q9950	Q9950	Injection, sulfur hexafluoride lipid microsphere, per ml	G	9457
C9459	Q9982	Flutemetamol F18, diagnostic, per study dose, up to 5 millicuries	G	9459
C9458	Q9983	Florbetaben F18, diagnostic, per study dose, up to 8.1 millicuries	G	9458

5. Provisions for Reducing Transitional Pass-Through Payments for Policy-Packaged Drugs, Biologicals, and Radiopharmaceuticals To Offset Costs Packaged Into APC Groups

Under 42 CFR 419.2(b), nonpass-through drugs, biologicals, and radiopharmaceuticals that function as supplies when used in a diagnostic test or procedure are packaged in the OPPS. This category includes diagnostic radiopharmaceuticals, contrast agents, stress agents, and other diagnostic drugs. Also under 42 CFR 419.2(b), nonpass-through drugs and biologicals that function as supplies in a surgical procedure are packaged in the OPPS. This category includes skin substitutes and other surgical-supply drugs and biologicals. As described earlier, section 1833(t)(6)(D)(i) of the Act specifies that the transitional pass-through payment amount for pass-through drugs and biologicals is the difference between the amount paid under section 1842(o) of the Act and the otherwise applicable OPD fee schedule amount. Because a payment offset is necessary in order to provide an appropriate transitional pass-through payment, we deduct from the pass-through payment for policy packaged drugs, biologicals, and radiopharmaceuticals an amount reflecting the portion of the APC payment associated with predecessor products in order to ensure no duplicate payment is made. This amount reflecting the portion of the APC payment associated with predecessor products is called the payment offset. The payment offset policy applies to all policy packaged drugs, biologicals, and

radiopharmaceuticals. For a full description of the payment offset policy as applied to diagnostic radiopharmaceuticals, contrast agents, stress agents, and skin substitutes, we refer readers to the discussion in the CY 2016 OPPS/ASC final rule with comment period (80 FR 70430 through 70432). In the CY 2017 OPPS/ASC proposed rule (81 FR 45660), for CY 2017, as we did in CY 2016, we proposed to continue to apply the same policy packaged offset policy to payment for pass-through diagnostic radiopharmaceuticals, pass-through contrast agents, pass-through stress agents, and pass-through skin substitutes. The proposed APCs to which a diagnostic radiopharmaceutical payment offset may be applicable were the same as for CY 2016 (80 FR 70430). Also, the proposed APCs to which a stress agent payment offset or a skin substitute payment offset were also the same as for CY 2016 (80 FR 70431 through 70432). The proposed APCs to which a contrast agent payment offset may be applicable are APCs 5571 through 5573 (Levels 1–3 Diagnostic Radiology with Contrast), which were listed in Addendum A to the proposed rule (which is available via the Internet on the CMS Web site).

We proposed to continue to post annually on the CMS Web site at *http://www.cms.gov/Medicare/Medicare-Fee-for-Service-Payment/HospitalOutpatientPPS/index.html* a file that contains the APC offset amounts that will be used for that year for purposes of both evaluating cost significance for candidate pass-through device categories and drugs and biologicals and establishing any appropriate APC offset amounts. Specifically, the file will continue to provide the amounts and percentages of APC payment associated with packaged implantable devices, policy-packaged drugs, and threshold packaged drugs and biologicals for every OPPS clinical APC.

Comment: One commenter recommended that CMS consider the drug offset amount at the HCPCS level to improve accuracy in isolating potentially duplicative packaged payments.

Response: We thank the commenter for this recommendation. We do not believe that the suggested change is necessary at this time. However, we may consider it in future rulemaking.

After consideration of the public comments we received, we are finalizing our proposal, without modification, for CY 2017 to continue to apply the same policy packaged offset policy to payment for pass-through diagnostic radiopharmaceuticals, pass-through contrast agents, pass-through stress agents, and pass-through skin substitutes as we did in CY 2016. We also are finalizing our proposal to continue to post annually on the CMS Web site at *http://www.cms.gov/Medicare/Medicare-Fee-for-Service-Payment/HospitalOutpatientPPS/index.html* a file that contains the APC offset amounts that will be used for that year for purposes of both evaluating cost significance for candidate pass-through device categories and drugs and biologicals and establishing any appropriate APC offset amounts.

B. OPPS Payment for Drugs, Biologicals, and Radiopharmaceuticals Without Pass-Through Payment Status

1. Criteria for Packaging Payment for Drugs, Biologicals, and Radiopharmaceuticals

a. Packaging Threshold

In accordance with section 1833(t)(16)(B) of the Act, the threshold for establishing separate APCs for payment of drugs and biologicals was set to $50 per administration during CYs 2005 and 2006. In CY 2007, we used the four quarter moving average Producer Price Index (PPI) levels for Pharmaceutical Preparations (Prescription) to trend the $50 threshold forward from the third quarter of CY 2005 (when the Pub. L. 108–173 mandated threshold became effective) to the third quarter of CY 2007. We then rounded the resulting dollar amount to the nearest $5 increment in order to determine the CY 2007 threshold amount of $55. Using the same methodology as that used in CY 2007 (which is discussed in more detail in the CY 2007 OPPS/ASC final rule with comment period (71 FR 68085 through 68086)), we set the packaging threshold for establishing separate APCs for drugs and biologicals at $100 for CY 2016 (80 FR 70433).

Following the CY 2007 methodology, for the CY 2017 OPPS/ASC proposed rule (81 FR 45660), we used the most recently available four quarter moving average PPI levels to trend the $50 threshold forward from the third quarter of CY 2005 to the third quarter of CY 2017 and rounded the resulting dollar amount ($109.03) to the nearest $5 increment, which yielded a figure of $110. In performing this calculation, we used the most recent forecast of the quarterly index levels for the PPI for Pharmaceuticals for Human Use (Prescription) (Bureau of Labor Statistics (BLS) series code WPUSI07003) from CMS' Office of the Actuary (OACT). We refer below to this series generally as the PPI for Prescription Drugs. Based on these calculations, we proposed a packaging threshold for CY 2017 of $110.

Following the finalized CY 2007 methodology, for this CY 2017 OPPS/ASC final rule with comment period, we used the most recently available four quarter moving average PPI levels to trend the $50 threshold forward from the third quarter of CY 2005 to the third quarter of CY 2017 and rounded the resulting dollar amount ($111.65) to the nearest $5 increment, which yielded a figure of $110. In performing this calculation, we used the most recent forecast of the quarterly index levels for the PPI for Pharmaceuticals for Human Use (Prescription) (Bureau of Labor Statistics series code WPUSI07003) from CMS' Office of the Actuary (OACT). Therefore, for this CY 2017 OPPS/ASC final rule with comment period, using the CY 2007 OPPS methodology, we are establishing a packaging threshold for CY 2017 of $110.

b. Packaging of Payment for HCPCS Codes That Describe Certain Drugs, Certain Biologicals, and Therapeutic Radiopharmaceuticals Under the Cost Threshold (''Threshold-Packaged Drugs'')

In the CY 2017 OPPS/ASC proposed rule (81 FR 45660), to determine the proposed CY 2017 packaging status for all nonpass-through drugs and biologicals that are not policy packaged, we calculated, on a HCPCS code-specific basis, the per day cost of all drugs, biologicals, and therapeutic radiopharmaceuticals (collectively called ''threshold-packaged'' drugs) that had a HCPCS code in CY 2015 and were paid (via packaged or separate payment) under the OPPS. We used data from CY 2015 claims processed before January 1, 2016 for this calculation. However, we did not perform this calculation for those drugs and biologicals with multiple HCPCS codes that include different dosages, as described in section V.B.1.d. of the proposed rule, or for the following policy-packaged items that we proposed to continue to package in CY 2017: Anesthesia drugs; drugs, biologicals, and radiopharmaceuticals that function as supplies when used in a diagnostic test or procedure; and drugs and biologicals that function as supplies when used in a surgical procedure.

In order to calculate the per day costs for drugs, biologicals, and therapeutic radiopharmaceuticals to determine their proposed packaging status in CY 2017, we used the methodology that was described in detail in the CY 2006 OPPS proposed rule (70 FR 42723 through 42724) and finalized in the CY 2006 OPPS final rule with comment period

(70 FR 68636 through 68638). For each drug and biological HCPCS code, we used an estimated payment rate of ASP+6 percent (which is the payment rate we proposed for separately payable drugs and biologicals for CY 2017, as discussed in more detail in section V.B.2.b. of the proposed rule) to calculate the CY 2017 proposed rule per day costs. We used the manufacturer submitted ASP data from the fourth quarter of CY 2015 (data that were used for payment purposes in the physician's office setting, effective April 1, 2016) to determine the proposed rule per day cost.

As is our standard methodology, for CY 2017, we proposed to use payment rates based on the ASP data from the first quarter of CY 2016 for budget neutrality estimates, packaging determinations, impact analyses, and completion of Addenda A and B to the proposed rule (which are available via the Internet on the CMS Web site) because these were the most recent data available for use at the time of development of the proposed rule. These data also were the basis for drug payments in the physician's office setting, effective April 1, 2016. For items that did not have an ASP-based payment rate, such as some therapeutic radiopharmaceuticals, we used their mean unit cost derived from the CY 2015 hospital claims data to determine their per day cost.

We proposed to package items with a per day cost less than or equal to $110, and identify items with a per day cost greater than $110 as separately payable. Consistent with our past practice, we cross-walked historical OPPS claims data from the CY 2015 HCPCS codes that were reported to the CY 2016 HCPCS codes that we displayed in Addendum B to the proposed rule (which is available via the Internet on the CMS Web site) for proposed payment in CY 2017.

Comment: A few commenters opposed the proposed OPPS packaging threshold of $110 for CY 2017. These commenters recommended that CMS freeze the packaging threshold at the current level ($100) or eliminate the packaging threshold and provide separate payment for all drugs with HCPCS codes.

Response: We have received and addressed a similar comment in numerous OPPS/ASC rulemakings in the past. As we stated in the CY 2007 OPPS/ASC final rule with comment period (71 FR 68086), we believe that packaging certain items is a fundamental component of a prospective payment system, that updating the packaging threshold of $50 for the CY 2005 OPPS is consistent with industry and government practices, and that the PPI for Prescription Drugs is an appropriate mechanism to gauge Part B drug inflation. Therefore, because packaging is a fundamental component of a prospective payment system that continues to provide important flexibility and efficiency in the delivery of high quality hospital outpatient services, we are not adopting the commenters' recommendations to pay separately for all drugs, biologicals, and radiopharmaceuticals for CY 2017, or to eliminate the packaging threshold, or to freeze the packaging threshold at $100.

After consideration of the public comments we received, and consistent with our methodology for establishing the packaging threshold using the most recent PPI forecast data, we are adopting a CY 2017 packaging threshold of $110. Our policy during previous cycles of the OPPS has been to use updated ASP and claims data to make final determinations of the packaging status of HCPCS codes for drugs, biologicals, and therapeutic radiopharmaceuticals for the OPPS/ASC final rule with comment period. We note that it is also our policy to make an annual packaging determination for a HCPCS code only when we develop the OPPS/ASC final rule with comment period for the update year. Only HCPCS codes that are identified as separately payable in the final rule with comment period are subject to quarterly updates. For our calculation of per day costs of HCPCS codes for drugs and biologicals in this CY 2017 OPPS/ASC final rule with comment period, we used ASP data from the first quarter of CY 2016, which is the basis for calculating payment rates for drugs and biologicals in the physician's office setting using the ASP methodology, effective July 1, 2016, along with updated hospital claims data from CY 2015. We note that we also used these data for budget neutrality estimates and impact analyses for this CY 2017 OPPS/ASC final rule with comment period.

Payment rates for HCPCS codes for separately payable drugs and biologicals included in Addenda A and B for this final rule with comment period are based on ASP data from the third quarter of CY 2016. These data are the basis for calculating payment rates for drugs and biologicals in the physician's office setting using the ASP methodology, effective October 1, 2016. These payment rates will then be updated in the January 2017 OPPS update, based on the most recent ASP data to be used for physician's office and OPPS payment as of January 1, 2017. For items that do not currently have an ASP-based payment rate, we proposed to recalculate their mean unit cost from all of the CY 2015 claims data and updated cost report information available for this CY 2017 final rule with comment period to determine their final per day cost.

Consequently, as stated in the CY 2017 OPPS/ASC proposed rule (81 FR 45661), the packaging status of some HCPCS codes for drugs, biologicals, and therapeutic radiopharmaceuticals in the proposed rule may be different from the same drug HCPCS code's packaging status determined based on the data used for the final rule with comment period. Under such circumstances, in the CY 2017 OPPS/ASC proposed rule, we proposed to continue to follow the established policies initially adopted for the CY 2005 OPPS (69 FR 65780) in order to more equitably pay for those drugs whose cost fluctuates relative to the proposed CY 2017 OPPS drug packaging threshold and the drug's payment status (packaged or separately payable) in CY 2016. These established policies have not changed for many years and are the same as described in the CY 2016 OPPS/ASC final rule with comment period (80 FR 70434).

We did not receive any public comments on our proposal to recalculate the mean unit cost for items that do not currently have an ASP-based payment rate from all of the CY 2015 claims data and updated cost report information available for this CY 2017 final rule with comment period to determine their final per day cost. We also did not receive any public comments on our proposal to continue to follow the established policies initially adopted for the CY 2005 OPPS (69 FR 65780), when the packaging status of some HCPCS codes for drugs, biologicals, and therapeutic radiopharmaceuticals in the proposed rule may be different from the same drug HCPCS code's packaging status determined based on the data used for the final rule with comment period. Therefore, for CY 2017, we are finalizing these two CY 2017 proposals without modification.

c. Policy Packaged Drugs, Biologicals, and Radiopharmaceuticals

As mentioned briefly earlier, in the OPPS we package several categories of drugs, biologicals, and radiopharmaceuticals regardless of the cost of the products. Because the products are packaged according to the policies in 42 CFR 419.2(b), we refer to these packaged drugs, biologicals, and radiopharmaceuticals as ''policy-packaged'' drugs, biologicals, and radiopharmaceuticals. Each of these

policies are either longstanding or based on longstanding principles and inherent to the OPPS and are as follows:

- Anesthesia, certain drugs, biologicals, and other pharmaceuticals; medical and surgical supplies and equipment; surgical dressings; and devices used for external reduction of fractures and dislocations (§ 419.2(b)(4));
- Intraoperative items and services (§ 419.2(b)(14));
- Drugs, biologicals, and radiopharmaceuticals that function as supplies when used in a diagnostic test or procedure (including but not limited to, diagnostic radiopharmaceuticals, contrast agents, and pharmacologic stress agents (§ 419.2(b)(15)); and
- Drugs and biologicals that function as supplies when used in a surgical procedure (including, but not limited to, skin substitutes and similar products that aid wound healing and implantable biologicals) (§ 419.2(b)(16)).

The policy at § 419.2(b)(16) is broader than that at § 419.2(b)(14). As we stated in the CY 2015 OPPS/ASC final rule with comment period: ''We consider all items related to the surgical outcome and provided during the hospital stay in which the surgery is performed, including postsurgical pain management drugs, to be part of the surgery for purposes of our drug and biological surgical supply packaging policy'' (79 FR 66875). The category described by § 419.2(b)(15) is large and includes diagnostic radiopharmaceuticals, contrast agents, stress agents, and some other products. The category described by § 419.2(b)(16) includes skin substitutes and some other products. We believe it is important to reiterate that cost consideration is not a factor when determining whether an item is a surgical supply (79 FR 66875).

Comment: A few commenters objected to the packaging of diagnostic radiopharmaceuticals and contrast agents under § 419.2(b)(15). They argued that the service payments that include the payment for the radiopharmaceutical or contrast agent do not cover the cost of expensive diagnostic radiopharmaceuticals or contrast agents. The commenters believed that separate payment should be made for these products.

Response: The packaging policy for these products has been in effect since CY 2008. We refer readers to the CY 2008 OPPS final rule (72 FR 66635 through 66646) for an extensive discussion of the original packaging policy for diagnostic radiopharmaceuticals and contrast agents, and to the CY 2014 OPPS/ASC final rule with comment period (78 FR 74927 through 74930) for a discussion of the packaging of diagnostic radiopharmaceuticals and contrast agents under § 419.2(b)(15); that is, the broader packaging policy for drugs and biologicals that function as supplies when used in a diagnostic test or procedure. We are not changing this packaging policy for CY 2017.

Comment: One commenter, the manufacturer of the stress agent Lexiscan® (regadenoson), disagreed with CMS' policy of packaging stress agents under § 419.2(b)(15). The commenter reiterated comments that it has made in the past since CMS packaged stress agents in CY 2014 (78 FR 74927 through 74930). The commenter believed that this packaging policy may create a financial incentive for hospitals to utilize a low-cost stress agent instead of a high-cost stress agent and/or encourage hospitals to reduce appropriate patient care. The commenter requested that CMS create separate APCs for diagnostic tests that use high cost drugs.

Response: We have responded to this comment in previous final rules (for example, the CY 2014 OPPS/ASC final rule with comment period (78 FR 74928 through 74929) and the CY 2016 OPPS/ASC final rule with comment period (80 FR 70347)). We have no reason to believe that any stress agent that a hospital chooses, regardless of the cost, will not be entirely medically appropriate for the patient. The commenter did not provide any specific information to suggest that a high-cost stress agent (for example, regadenoson) is more clinically appropriate than a low-cost stress agent (for example, adenosine) in certain patients. In fact, we are aware of some evidence that may suggest that the opposite is true (Brink, H.L., Dickerson, J.A., Stephens, J.A. and Pickworth, K.K. (2015), Comparison of the Safety of Adenosine and Regadenoson in Patients Undergoing Outpatient Cardiac Stress Testing. *Pharmacotherapy,* 35: 1117–1123. Available at: American College of Cardiology Web site at: *https://www.acc.org/latest-in-cardiology/journal-scans/2016/01/15/13/40/adenosine-versus-regadenoson-in-cardiac-stress*).

To the extent that this stress agent packaging policy encourages hospitals to utilize the cheaper stress agent—adenosine—instead of regadenoson (as the commenter speculated that it has), we believe that this is a positive effect of the stress agent packaging policy. One important purpose of these packaging policies is to provide hospitals with the financial incentive to choose less expensive alternative drugs, devices, and supplies, as clinically appropriate. In the preambles of our past rulemakings, we have repeatedly stated the following axiom: ''Where there are a variety of devices, drugs, items, supplies, etc. that could be used to furnish a service, some of which are more expensive than others, packaging encourages hospitals to use the most cost-efficient item that meets the patient's needs, rather than to routinely use a more expensive item, which often results if separate payment is provided for the items'' (78 FR 74925). The potential effect of this policy that the commenter is concerned about (hospitals choosing a lower cost stress agent) is precisely the outcome that we hope to encourage through this packaging policy. Therefore, we believe that this packaging policy supports medically necessary and efficient patient care. We believe that creating separate APCs for diagnostic tests that use high-cost stress agents could undermine this goal and, therefore, is not warranted at this time.

Comment: One commenter, the manufacturer of the drug Omidria®, did not want CMS to package the drug Omidria® (described by HCPCS code C9447, with status indicator ''N'') under § 419.2(b)(14) or (b)(16), after pass-through payment status expires at the end of CY 2017 (80 FR 70347). Specifically, the commenter opposed packaging this drug with cataract surgery effective beginning in CY 2018 and subsequent years. The commenter believed that the surgical supply packaging policy inadvertently conflicts with CMS' broader policies targeting therapeutic products, unintentionally creates financial disincentives for hospitals and ASCs to use Omidria®, and is overly broad. The commenter pointed out that studies have shown that the use of Omidria® can reduce complications during cataract surgery, and therefore Omidria® provides a distinct therapeutic benefit independent of the procedural benefits achieved without Omidria®. The commenter recommended that CMS exclude from the surgical supply packaging policy all drugs and biologicals that have ''a therapeutic indication that provides a benefit independent of the procedure performed without the drug or biological and that may substitute for one or more other subsequent interventions that would otherwise be separately paid by CMS.'' Presumably, according to the commenter, if CMS adopted such an exclusion, it would result in the continued separate

payment for Omidria® after pass-through payment status expires.

Response: We appreciate the commenters' concerns and believe that some additional explanation might be of use. We believe that this comment reflects a misunderstanding of our OPPS packaging policy that packages drugs and biologicals that function as supplies when used in a surgical procedure. We have reviewed Omidria®'s indications and, based on those indications, it is unclear what the commenter means when it requested that CMS exclude drugs from the packaging policy that have ''a therapeutic indication that provides a benefit independent of the procedure performed without the drug or biological and that may substitute for one or more other subsequent interventions that would otherwise be separately paid by CMS.'' Omidria® supplements the drugs delivered as preoperative eye drops to dilate the pupil to either improve or prolong dilation in certain cases. The benefit of Omidria® is the facilitation of cataract surgery. The surgical supply packaging policy for drugs and biologicals that function as surgical supplies is intended to apply broadly to drugs and biologicals that are used in surgery or that are used to achieve the surgical objective. In the CY 2014 OPPS/ASC final rule with comment period, in discussing the surgical supplies packaging policy as it applies to another drug used in an eye surgery, we stated that ''we believe packaging is appropriate for items and services that are integral or ancillary or supportive or dependent or adjunctive to the primary procedure. Therefore, items and services that fall within any of these categories may be properly packaged in the OPPS'' (78 FR 74938). Any and all of these descriptive terms apply to Omidria®, which is integral and ancillary and supportive and dependent and adjunctive to cataract surgery. The commenter believes that the packaging policy unintentionally creates financial disincentives for hospitals and ASCs to use Omidria®. We view the financial effect of the packaging policy differently. We believe this approach promotes efficient resource use in hospitals and ASCs. We believe that once its pass-through payment status expires, Omidria® should be packaged as are all of these other surgical supplies. In summary, in the CY 2016 OPPS/ASC final rule with comment period, we finalized a policy to package the drug Omidria® (described by HCPCS code C9447) after pass-through payment status expires under our policy that packages drugs and biologicals that function as supplies when used in a surgical procedure. This policy will take effect on January 1, 2018.

Comment: One commenter, the manufacturer of the drug Cysview (described by HCPCS code C9275) requested that CMS withdraw the packaging policy described by 42 CFR 419.2(b)(15), which packages drugs, biologicals, and radiopharmaceuticals that function as supplies in a diagnostic test or procedure, and pay separately for its drug, Cysview. The commenter pointed out that CMS acknowledged in the CY 2004 OPPS proposed rule that ''. . . packaging payments adversely affect beneficiary access to medically necessary services'' (68 FR 47995). The commenter also asserted that this packaging policy has had a negative effect on the quality of patient care because it has created a significant financial disincentive for hospitals to purchase Cysview. In addition, the commenter stated that Cysview costs $810, but because the APC payment amount for the cystoscopy procedures in which Cysview is used is based on the average costs of many different procedures (most of which do not use Cysview), the cost of Cysview is highly diluted and therefore the cystoscopy procedure payments do not fully reflect the cost of Cysview.

Response: We begin with the complete quote from the CY 2004 OPPS proposed rule from which the commenter extracted its partial quote described earlier. The full quote is as follows: ''*Packaging costs into a single aggregate payment for a service, procedure, or episode of care is a fundamental principle that distinguishes a prospective payment system from a fee schedule.* In general, packaging the costs of items and services into the payment for the primary procedure or service with which they are associated encourages hospital efficiencies and also enables hospitals to manage their resources with maximum flexibility. Notwithstanding our commitment to package as many costs as possible, we are aware that packaging payments for certain drugs and radiopharmaceuticals, especially those that are particularly expensive or rarely used, might result in insufficient payments to hospitals, which could adversely affect beneficiary access to medically necessary services'' (68 FR 47995) (emphasis added). Separate payment for all products, items, devices, among others, that are the components of a primary service furnished to a patient in the hospital would be inconsistent with a prospective payment system—doing so would make the OPPS essentially a fee schedule in which every coded item resulted in additional payment. Furthermore, the latter part of the quoted statement refers only to particularly expensive or rarely used drugs, and Cysview is neither. Cysview has a fairly broad indication as an adjunct to white light cystoscopy, and $810 is not ''particularly expensive'' for an OPPS drug (many of which cost several thousands of dollars). However, we do note that the price of Cysview has increased 38 percent in the last 5 years (from approximately $588 in 2012). Finally, the commenter stated that the relevant bladder cancer APCs are APC 5373 (Level 3 Urology and Related Services) and APC 5374 (Level 4 Urology and Related Services), and that these APCs contain the procedure codes that primarily use Cysview when blue light cystoscopy is performed. Both of these APCs are being finalized as C–APCs for CY 2017. Part of the C–APC methodology is to package all drugs except for those in pass-through payment status, and this methodology would apply to Cysview because it is not in drug pass-through payment status. Therefore, aside from the diagnostic test supplies packaging policy, Cysview would be packaged when used with any procedure assigned to a C–APC.

In summary, We are not adopting any changes based on the comments received on these three policy-packaged drugs—Lexiscan®, Omidria®, and Cysview—for CY 2017.

d. High Cost/Low Cost Threshold for Packaged Skin Substitutes

In the CY 2014 OPPS/ASC final rule with comment period (78 FR 74938), we unconditionally packaged skin substitute products into their associated surgical procedures as part of a broader policy to package all drugs and biologicals that function as supplies when used in a surgical procedure. As part of the policy to finalize the packaging of skin substitutes, we also finalized a methodology that divides the skin substitutes into a high cost group and a low cost group, in order to ensure adequate resource homogeneity among APC assignments for the skin substitute application procedures (78 FR 74933). We continued the high cost/low cost categories policy in CY 2015 and CY 2016, and in the CY 2017 OPPS/ASC proposed rule (81 FR 45661 through 45662), we proposed to continue it for CY 2017. Under this current policy, skin substitutes in the high cost category are reported with the skin substitute application CPT codes and skin substitutes in the low cost category are reported with the analogous skin substitute HCPCS C-codes. For a

discussion of the CY 2014 and CY 2015 methodologies for assigning skin substitutes to either the high cost group or the low cost group, we refer readers to the CY 2014 OPPS/ASC final rule with comment period (78 FR 74932 through 74935) and the CY 2015 OPPS/ASC final rule with comment period (79 FR 66882 through 66885).

For CY 2017, as in CY 2016, we proposed to determine the high/low cost status for each skin substitute product based on either a product's geometric mean unit cost (MUC) exceeding the geometric MUC threshold or the product's per day cost (PDC) (the total units of a skin substitute multiplied by the mean unit cost and divided by the total number of days) exceeding the PDC threshold. For a discussion of the CY 2016 high cost/low cost methodology, we refer readers to the CY 2016 OPPS/ASC final rule with comment period (80 FR 70434 through 70435). We proposed to assign skin substitutes that exceed either the MUC threshold or the PDC threshold to the high cost group. We proposed to assign skin substitutes with a MUC or a PDC that does not exceed either the MUC threshold or the PDC threshold to the low cost group. For this CY 2017 OPPS/ASC final rule with comment period, we analyzed updated CY 2015 claims data to calculate the MUC threshold (a weighted average of all skin substitutes' MUCs) and the PDC threshold (a weighted average of all skin substitutes' PDCs). The final CY 2017 MUC threshold is $33 per cm^2 (rounded to the nearest $1) (proposed at $25 per cm^2) and the final CY 2017 PDC threshold is $716 (rounded to the nearest $1) (proposed at $729).

For CY 2017, as in CY 2016, we proposed to continue to assign skin substitutes with pass-through payment status to the high cost category, and to assign skin substitutes with pricing information but without claims data to calculate a geometric MUC or PDC to either the high cost or low cost category based on the product's ASP+6 percent payment rate as compared to the MUC threshold. If ASP is not available, we stated in the proposed rule that we would use WAC+6 percent or 95 percent of AWP to assign a product to either the high cost or low cost category. We also stated in the proposed rule that new skin substitutes without pricing information would be assigned to the low cost category until pricing information is available to compare to the CY 2017 MUC threshold. For a discussion of our existing policy under which we assign skin substitutes without pricing information to the low cost category until pricing information is available, we refer readers to the CY 2016 OPPS/ASC final rule with comment period (80 FR 70436). In addition, as in CY 2016, we proposed for CY 2017 that a skin substitute that is both assigned to the high cost group in CY 2016 and also exceeds either the MUC or PDC in the proposed rule for CY 2017 would be assigned to the high cost group for CY 2017, even if it no longer exceeds the MUC or PDC CY 2017 thresholds based on updated claims data and pricing information used in this CY 2017 final rule with comment period. Table 15 of the CY 2017 OPPS/ASC proposed rule (81 FR 45661 through 45662) displayed the proposed CY 2017 high cost or low cost category assignment for each skin substitute product.

Comment: One commenter notified CMS of an error in the calculation of the MUC threshold reported in the CY 2017 OPPS/ASC proposed rule (81 FR 45661), and stated that the values for the MUC threshold are different from the values for the PDC threshold. The commenter also requested that skin substitute products that were assigned to the high cost group because of the incorrect lower MUC threshold in the proposed rule, and that would have been classified in the low cost group if the corrected higher MUC threshold had been used in the proposed rule, be reassigned to the low cost group in the final rule.

Response: We reviewed our calculations and agreed with the commenter that the MUC threshold was incorrect in the proposed rule. We also found a calculation error with the PDC threshold. We have corrected our calculations and used more recent claims data from CY 2015 to revise the MUC threshold and the PDC threshold for this final rule with comment period.

We disagree with the request of the commenter to move skin substitute products back to the low cost group because of the erroneous calculation of a lower MUC threshold in the proposed rule. The policy we proposed to continue from CY 2016, and which we are finalizing for CY 2017, retains a skin substitute product in the high cost group if the product was assigned to the high cost group in CY 2016 and exceeded either the MUC threshold or the PDC threshold of the proposed rule for CY 2017. The policy does not make exceptions due to calculation errors or revisions by CMS. We will follow this policy and retain all skin substitute products in the high cost group that were assigned to the high cost group in CY 2016 and exceeded either the MUC threshold or the PDC threshold of the proposed rule for CY 2017.

Comment: One commenter provided information to support that HCPCS code Q4163 (Amnion bio and woundex sq cm) should be assigned to the high cost skin substitute group. The commenter stated that HCPCS code Q4163 is a relatively new skin substitute product and there was not sufficient claims data or pricing information available for the product when the CY 2017 OPPS/ASC proposed rule was released. The commenter stated that regulatory guidance requires CMS to assign a nonpass-through skin substitute product to the low cost group when there are no available cost data. The commenter supplied wholesale acquisition cost (WAC) and average wholesale price (AWP) data for HCPCS code Q4163 showing that HCPCS code Q4163 should be assigned to the high cost group.

Response: We reviewed WAC and ASP data for HCPCS code Q4163, and we agree with the findings of the commenter. After consideration of the public comment we received about HCPCS code Q4163, in this final rule with comment period, we are assigning HCPCS code Q4163 to the high cost skin substitute group for CY 2017.

Comment: One commenter requested that PuraPly (described by HCPCS code Q4172; previously HCPCS code C9349) have its pass-through payment status end as of December 31, 2016, and not continue through CY 2017. The commenter stated that PuraPly received its pass-through payment status in January 2015 and will have 2 full years of pass-through payment status by December 2016. The commenter also asserted that PuraPly was not a new skin substitute product when approved for pass-through payment status in the CY 2015 OPPS/ASC final rule with comment period. The commenter provided evidence that PuraPly, called by its previous name, FortaDerm, was introduced to the market as early as 2002.

Response: We disagree with the commenter. PuraPly (described by HCPCS code Q4172; previously HCPCS code C9349) was given pass-through payment status under the pass-through payment policy and process for drugs and biologicals that was in effect prior to CY 2015. Pass-through payment status products covered by the policy receive pass-through payments for at least 2 years but for no more than 3 years from the date the first OPPS payment for the product is generated. The assertion by the commenter that PuraPly will have reached 2 years of pass-through payment status by the end of December 2016 is incorrect. PuraPly will not achieve 2 years of pass-through

payment status until at least January 2017. The pass-through payment policy for drugs and biologicals that was in effect at the beginning of CY 2015 only allows changes to a pass-through payment designation for a product at the beginning of a calendar year. Therefore, PuraPly must continue to have pass-through status for all of CY 2017. The evidence presented by the commenter that PuraPly was available commercially in 2002 is not relevant, as the product (under any name) did not have pass-through payment status prior to 2015, and there was no newness criterion for drug and biological pass-through payment status eligibility at the time of the PuraPly (formerly FortaDerm) pass-through payment application evaluation.

After consideration of the public comment we received, we are finalizing our proposal, without modification, to continue pass-through status for PuraPly (HCPCS code Q4172; previously HCPCS code C9349) for CY 2017.

Comment: A few commenters supported the current methodology used by CMS to assign skin substitute products into high cost and low cost categories. Commenters appreciated that either the MUC threshold or the PDC threshold could be used to qualify skin substitute products as high cost. The commenter stated that including the PDC threshold reduces the risk that products with larger sizes would be assigned to the low cost category because of a low MUC. One commenter suggested that using the PDC threshold alone may improve on the current methodology. Another commenter supported the policy assigning skin substitute products to the high cost group that exceeded the MUC threshold or the PDC threshold in the CY 2016 final rule and in the CY 2017 proposed rule, even if analysis for the CY 2017 final rule indicate a product should be assigned to the low cost group.

Response: We appreciate the commenters' support. We agree that using either a MUC methodology or a PDC methodology along with the policy of automatically assigning skin substitute products to the high cost group if they were identified as high cost for both the CY 2016 final rule and the CY 2017 proposed rule stabilizes cost group assignments.

Comment: Several commenters expressed concerns about aspects of the current CMS methodology for payment for the use of skin substitute products. The commenters stated that one issue is the accurate reporting of the cost of skin substitute products. The commenters believed that many providers report lower utilization of skin substitutes than what providers are actually using, which leads to lower payment rates. Some commenters were generally opposed to packaging or bundling skin substitute products with other services because of concerns that the cost of skin substitute products is not accurately accounted for in the packaged or bundled rates. Commenters continued to have concerns about the payment for wounds larger than 100 cm^2 that they believed are too low even after the addition of PDC methodology to determine if a skin substitute product should be in the high cost group.

Several commenters also suggested changes to the system of assigning skin substitutes to either a high cost or low cost category. Suggestions included creating a three-tiered system to more accurately reflect the prices of individual products, monitoring the current methodology to determine if it was leading to lower reimbursements, and improving transparency by making available MUC and PDC calculations and claims data by product.

Some commenters made a more general request for overall stability with skin substitute methodology and alternate ways to calculate the cost of products to compare to the MUC and PDC thresholds without using OPPS claims data. The most common suggestion was to use average sales price (ASP) + 6 percent as a primary source of cost data instead of using ASP + 6 percent when no claims data are available for a product.

Response: We appreciate the feedback we received from the commenters. However, we believe the current cost estimation and payment policies for skin substitutes reasonably reflect the costs incurred to administer these products. Therefore, after consideration of the public comments we received, we are finalizing our proposal to maintain current policies regarding the payment of skin substitute products for CY 2017 without additional modifications.

Comment: One commenter requested that CMS alter CPT coding instructions that prohibits wound healing products in the form of a gel, liquid, foam, ointment, powder, among others (a form other than a graft-type sheet) from using the skin substitute application CPT codes or that CMS pay separately for these products in the OPPS.

Response: Skin substitutes and all of their variations and related wound products, regardless of the form or physical state, are packaged in the OPPS as surgical supplies under 42 CFR 419.2(b)(16). Skin substitutes is a broad class of wound products that includes all of the products in the HCPCS skin substitute Q code series and all related products. We cannot change AMA CPT coding guidance. We can (if we choose to do so) provide coding instructions or guidance specifically for Medicare coding and payment purposes. We believe that the AMA coding guidance for the skin substitute codes is sufficient as currently written. The skin substitute graft materials are applied to a wound in a manner that is different from how a liquid or particulate material is applied. In general, there are not very many codes for the application of topical medications such as liquids, creams or ointments because what the applier has to do to put the medication or other medical product on a patient's skin does not typically rise to the level of a service that would need to be described by a code depicting the professional services of a health care provider. In other words, it is generally a very minor activity that requires little time, effort or skill, and often such products are self-administered. Regarding the request that we pay separately for liquid, gel, particulate, powder, or other forms of skin substitutes, we do not agree with this request. It is common in the OPPS that the use of a surgical supply (whether expensive or not) does not correspond to a specific procedure code with a payment that covers the full cost of the supply. In this case, access to particular skin substitute products is generally not our concern because there are so many different skin substitute products available to Medicare beneficiaries in the HOPD that adequate treatment for wounds under the current payment scheme should always be available.

After consideration of the public comments we received, we are finalizing as proposed our high cost/low cost skin substitute methodology as described above. Table 37 below displays the CY 2017 high cost or low cost category assignment for each skin substitute product.

TABLE 37—SKIN SUBSTITUTE ASSIGNMENTS TO HIGH COST AND LOW COST GROUPS FOR CY 2017

CY 2017 HCPCS code	CY 2017 short descriptor	CY 2017 High/low assignment
C9363	Integra Meshed Bil Wound Mat	High.
Q4100	Skin Substitute, NOS	Low.
Q4101	Apligraf	High.
Q4102	Oasis Wound Matrix	Low.
Q4103	Oasis Burn Matrix	High.
Q4104	Integra BMWD	High.
Q4105	Integra DRT	High.
Q4106	Dermagraft	High.
Q4107	GraftJacket	High.
Q4108	Integra Matrix	High.
Q4110	Primatrix	High.
Q4111	Gammagraft	Low.
Q4115	Alloskin	Low.
Q4116	Alloderm	High.
Q4117	Hyalomatrix	Low.
Q4119	Matristem Wound Matrix	Low.
Q4120	Matristem Burn Matrix	High.
Q4121	Theraskin	High.
Q4122	Dermacell	High.
Q4123	Alloskin	High.
Q4124	Oasis Tri-layer Wound Matrix	Low.
Q4126	Memoderm/derma/tranz/integup	High.
Q4127	Talymed	High.
Q4128	Flexhd/Allopatchhd/Matrixhd	High.
Q4129	Unite Biomatrix	High.
Q4131	Epifix	High.
Q4132	Grafix Core	High.
Q4133	Grafix Prime	High.
Q4134	hMatrix	Low.
Q4135	Mediskin	Low.
Q4136	Ezderm	Low.
Q4137	Amnioexcel or Biodexcel, 1cm	High.
Q4138	Biodfence DryFlex, 1cm	High.
Q4140	Biodfence 1cm	High.
Q4141	Alloskin ac, 1cm	High.
Q4143	Repriza, 1cm	High.
Q4146	Tensix, 1CM	High.
Q4147	Architect ecm, 1cm	High.
Q4148	Neox 1k, 1cm	High.
Q4150	Allowrap DS or Dry 1 sq cm	High.
Q4151	AmnioBand, Guardian 1 sq cm	High.
Q4152	Dermapure 1 square cm	High.
Q4153	Dermavest 1 square cm	High.
Q4154	Biovance 1 square cm	High.
Q4156	Neox 100 1 square cm	High.
Q4157	Revitalon 1 square cm	High.
Q4158	MariGen 1 square cm	High.
Q4159	Affinity 1 square cm	High.
Q4160	NuShield 1 square cm	High.
Q4161	Bio-Connekt per square cm	Low.
Q4162	Amnio bio and woundex flow	Low.
Q4163	Amnion bio and woundex sq cm	High.
Q4164	Helicoll, per square cm	High.
Q4165	Keramatrix, per square cm	Low.
Q4166	Cytal, per square cm	Low.
Q4167	Truskin, per square cm	Low.
Q4168	Amnioband, 1 mg	Low.
Q4169	Artacent wound, per square cm	Low.
Q4170	Cygnus, per square cm	Low.
Q4171	Interfyl, 1 mg	Low.
Q4172*	PuraPly, PuraPly antimic	High.
Q4173	Palingen or palingen xplus, per sq cm	Low.
Q4175	Miroderm, per square cm	Low.

* Pass-through payment status in CY 2017.

e. Packaging Determination for HCPCS Codes That Describe the Same Drug or Biological but Different Dosages

In the CY 2010 OPPS/ASC final rule with comment period (74 FR 60490 through 60491), we finalized a policy to make a single packaging determination for a drug, rather than an individual HCPCS code, when a drug has multiple HCPCS codes describing different dosages because we believed that adopting the standard HCPCS code-specific packaging determinations for these codes could lead to inappropriate payment incentives for hospitals to report certain HCPCS codes instead of others. We continue to believe that making packaging determinations on a drug-specific basis eliminates payment incentives for hospitals to report certain HCPCS codes for drugs and allows hospitals flexibility in choosing to report all HCPCS codes for different dosages of the same drug or only the lowest dosage HCPCS code. Therefore, in the CY 2017 OPPS/ASC proposed rule (81 FR 45662), we proposed to continue our policy to make packaging determinations on a drug-specific basis, rather than a HCPCS code-specific basis, for those HCPCS codes that describe the same drug or biological but different dosages in CY 2017.

For CY 2017, in order to propose a packaging determination that is consistent across all HCPCS codes that describe different dosages of the same drug or biological, we aggregated both our CY 2015 claims data and our pricing information at ASP+6 percent across all of the HCPCS codes that describe each distinct drug or biological in order to determine the mean units per day of the drug or biological in terms of the HCPCS code with the lowest dosage descriptor. The following drugs did not have pricing information available for the ASP methodology for the CY 2017 OPPS/ASC proposed rule, and as is our current policy for determining the packaging status of other drugs, we used the mean unit cost available from the CY 2015 claims data to make the proposed packaging determinations for these drugs: HCPCS code J1840 (Injection, kanamycin sulfate, up to 500 mg), J1850 (Injection, kanamycin sulfate, up to 75 mg) and HCPCS code J3472 (Injection, hyaluronidase, ovine, preservative free, per 1000 usp units).

For all other drugs and biologicals that have HCPCS codes describing different doses, we then multiplied the proposed weighted average ASP+6 percent per unit payment amount across all dosage levels of a specific drug or biological by the estimated units per day for all HCPCS codes that describe each drug or biological from our claims data to determine the estimated per day cost of each drug or biological at less than or equal to the proposed CY 2017 drug packaging threshold of $110 (so that all HCPCS codes for the same drug or biological would be packaged) or greater than the proposed CY 2017 drug packaging threshold of $110 (so that all HCPCS codes for the same drug or biological would be separately payable). The proposed packaging status of each drug and biological HCPCS code to which this methodology would apply in CY 2017 was displayed in Table 16 of the CY 2017 OPPS/ASC proposed rule (81 FR 45663).

We did not receive any public comments on this proposal. Therefore, for CY 2017, we are finalizing our CY 2017 proposal, without modification, to continue our policy to make packaging determinations on a drug-specific basis, rather than a HCPCS code-specific basis, for those HCPCS codes that describe the same drug or biological but different dosages. Table 38 below displays the final packaging status of each drug and biological HCPCS code to which the finalized methodology applies for CY 2017.

TABLE 38—HCPCS CODES TO WHICH THE CY 2017 DRUG-SPECIFIC PACKAGING DETERMINATION METHODOLOGY APPLIES

CY 2017 HCPCS code	CY 2017 long descriptor	CY 2017 SI
C9257	Injection, bevacizumab, 0.25 mg	K
J9035	Injection, bevacizumab, 10 mg	K
J1460	Injection, gamma globulin, intramuscular, 1 cc	K
J1560	Injection, gamma globulin, intramuscular over 10 cc	K
J2788	Injection, rho d immune globulin, human, minidose, 50 micrograms (250 i.u.)	N
J2790	Injection, rho d immune globulin, human, full dose, 300 micrograms (1500 i.u.)	N
J8520	Capecitabine, oral, 150 mg	N
J8521	Capecitabine, oral, 500 mg	N
J7515	Cyclosporine, oral, 25 mg	N
J7502	Cyclosporine, oral, 100 mg	N
J2920	Injection, methylprednisolone sodium succinate, up to 40 mg	N
J2930	Injection, methylprednisolone sodium succinate, up to 125 mg	N
J3471	Injection, hyaluronidase, ovine, preservative free, per 1 usp unit (up to 999 usp units)	N
J3472	Injection, hyaluronidase, ovine, preservative free, per 1000 usp units	N
J1642	Injection, heparin sodium, (heparin lock flush), per 10 units	N
J1644	Injection, heparin sodium, per 1000 units	N
J1850	Injection, kanamycin sulfate, up to 75 mg	N
J1840	Injection, kanamycin sulfate, up to 500 mg	N
J7050	Infusion, normal saline solution, 250 cc	N
J7040	Infusion, normal saline solution, sterile (500 ml=1 unit)	N
J7030	Infusion, normal saline solution, 1000 cc	N
J1020	Injection, methylprednisolone acetate, 20 mg	N
J1030	Injection, methylprednisolone acetate, 40 mg	N
J1040	Injection, methylprednisolone acetate, 80 mg	N
J9250	Methotrexate sodium, 5 mg	N
J9260	Methotrexate sodium, 50 mg	N

2. Payment for Drugs and Biologicals Without Pass-Through Status That Are Not Packaged

a. Payment for Specified Covered Outpatient Drugs (SCODs) and Other Separately Payable and Packaged Drugs and Biologicals

Section 1833(t)(14) of the Act defines certain separately payable radiopharmaceuticals, drugs, and biologicals and mandates specific payments for these items. Under section 1833(t)(14)(B)(i) of the Act, a ''specified covered outpatient drug'' (known as a SCOD) is defined as a covered outpatient drug, as defined in section 1927(k)(2) of the Act, for which a separate APC has been established and that either is a radiopharmaceutical agent or is a drug or biological for which payment was made on a pass-through basis on or before December 31, 2002.

Under section 1833(t)(14)(B)(ii) of the Act, certain drugs and biologicals are designated as exceptions and are not included in the definition of SCODs. These exceptions are—

- A drug or biological for which payment is first made on or after January 1, 2003, under the transitional pass-through payment provision in section 1833(t)(6) of the Act.
- A drug or biological for which a temporary HCPCS code has not been assigned.
- During CYs 2004 and 2005, an orphan drug (as designated by the Secretary).

Section 1833(t)(14)(A)(iii) of the Act requires that payment for SCODs in CY 2006 and subsequent years be equal to the average acquisition cost for the drug for that year as determined by the Secretary, subject to any adjustment for overhead costs and taking into account the hospital acquisition cost survey data collected by the Government Accountability Office (GAO) in CYs 2004 and 2005, and later periodic surveys conducted by the Secretary as set forth in the statute. If hospital acquisition cost data are not available, the law requires that payment be equal to payment rates established under the methodology described in section 1842(o), section 1847A, or section 1847B of the Act, as calculated and adjusted by the Secretary as necessary. We refer to this alternative methodology as the ''statutory default.'' Most physician Part B drugs are paid at ASP+6 percent in accordance with section 1842(o) and section 1847A of the Act.

Section 1833(t)(14)(E)(ii) of the Act provides for an adjustment in OPPS payment rates for SCODs to take into account overhead and related expenses, such as pharmacy services and handling costs. Section 1833(t)(14)(E)(i) of the Act required MedPAC to study pharmacy overhead and related expenses and to make recommendations to the Secretary regarding whether, and if so how, a payment adjustment should be made to compensate hospitals for overhead and related expenses. Section 1833(t)(14)(E)(ii) of the Act authorizes the Secretary to adjust the weights for ambulatory procedure classifications for SCODs to take into account the findings of the MedPAC study.

It has been our longstanding policy to apply the same treatment to all separately payable drugs and biologicals, which include SCODs, and drugs and biologicals that are not SCODs. Therefore, we apply the payment methodology in section 1833(t)(14)(A)(iii) of the Act to SCODs, as required by statute, but we also apply it to separately payable drugs and biologicals that are not SCODs, which is a policy determination rather than a statutory requirement. In the CY 2017 OPPS/ASC proposed rule (81 FR 45664), we proposed to apply section 1833(t)(14)(A)(iii)(II) of the Act to all separately payable drugs and biologicals, including SCODs. Although we do not distinguish SCODs in this discussion, we note that we are required to apply section 1833(t)(14)(A)(iii)(II) of the Act to SCODs, but we also are applying this provision to other separately payable drugs and biologicals, consistent with our history of using the same payment methodology for all separately payable drugs and biologicals.

For a detailed discussion of our OPPS drug payment policies from CY 2006 to CY 2012, we refer readers to the CY 2013 OPPS/ASC final rule with comment period (77 FR 68383 through 68385). In the CY 2013 OPPS/ASC final rule with comment period (77 FR 68386 through 68389), we first adopted the statutory default policy to pay for separately payable drugs and biologicals at ASP+6 percent based on section 1833(t)(14)(A)(iii)(II) of the Act. We continued this policy of paying for separately payable drugs and biologicals at the statutory default for CY 2014, CY 2015, and CY 2016 (80 FR 70440).

b. CY 2017 Payment Policy

In the CY 2017 OPPS/ASC proposed rule (81 FR 45664), for CY 2017 and subsequent years, we proposed to continue our payment policy that has been in effect from CY 2013 to present and pay for separately payable drugs and biologicals at ASP+6 percent in accordance with section 1833(t)(14)(A)(iii)(II) of the Act (the statutory default). We proposed that the ASP+6 percent payment amount for separately payable drugs and biologicals requires no further adjustment and represents the combined acquisition and pharmacy overhead payment for drugs and biologicals. We also proposed that payments for separately payable drugs and biologicals are included in the budget neutrality adjustments, under the requirements in section 1833(t)(9)(B) of the Act, and that the budget neutral weight scaler is not applied in determining payments for these separately paid drugs and biologicals.

Comment: The majority of commenters supported CMS' proposal to continue to pay for separately payable drugs and biologicals based on the statutory default rate of ASP+6 percent. One commenter recommended that CMS increase payment for separately payable drugs and biologicals without pass-through payment status to adequately cover providers' acquisition and pharmacy overhead costs.

Response: We thank commenters for their support. We continue to believe that ASP+6 percent based on the statutory default is appropriate for payment of separately payable drugs and biologicals for CY 2017 and that this percentage amount adequately covers acquisition and overhead cost. We see no evidence that an additional payment for overhead is required for separately payable drugs, biologicals, and therapeutic radiopharmaceuticals for CY 2017.

After consideration of the public comments we received, we are finalizing our proposal, without modification, to pay for separately payable drugs and biologicals at ASP+6 percent based on section 1833(t)(14)(A)(iii)(II) of the Act (the statutory default). The ASP+6 percent payment amount for separately payable drugs and biologicals requires no further adjustment and represents the combined acquisition and pharmacy overhead payment for drugs and biologicals for CY 2017. In addition, we are finalizing our proposal that payment for separately payable drugs and biologicals be included in the budget neutrality adjustments, under the requirements of section 1833(t)(9)(B) of the Act, and that the budget neutral weight scaler is not applied in determining payment of these separately paid drugs and biologicals.

We note that separately payable drug and biological payment rates listed in Addenda A and B to this final rule with comment period (available via the Internet on the CMS Web site), which illustrate the final CY 2017 payment of ASP+6 percent for separately payable

nonpass-through drugs and biologicals and ASP+6 percent for pass-through drugs and biologicals, reflect either ASP information that is the basis for calculating payment rates for drugs and biologicals in the physician's office setting effective October 1, 2016, or WAC, AWP, or mean unit cost from CY 2015 claims data and updated cost report information available for this final rule with comment period. In general, these published payment rates are not the same as the actual January 2017 payment rates. This is because payment rates for drugs and biologicals with ASP information for January 2017 will be determined through the standard quarterly process where ASP data submitted by manufacturers for the third quarter of 2016 (July 1, 2016 through September 30, 2016) will be used to set the payment rates that are released for the quarter beginning in January 2017 near the end of December 2016. In addition, payment rates for drugs and biologicals in Addenda A and B to this final rule with comment period for which there was no ASP information available for October 2016 are based on mean unit cost in the available CY 2015 claims data. If ASP information becomes available for payment for the quarter beginning in January 2017, we will price payment for these drugs and biologicals based on their newly available ASP information. Finally, there may be drugs and biologicals that have ASP information available for this final rule with comment period (reflecting October 2016 ASP data) that do not have ASP information available for the quarter beginning in January 2017. As stated in the CY 2017 OPPS/ASC proposed rule (81 FR 45664), these drugs and biologicals will then be paid based on mean unit cost data derived from CY 2015 hospital claims. Therefore, the payment rates listed in Addenda A and B to this final rule with comment period are not for January 2017 payment purposes and are only illustrative of the CY 2017 OPPS payment methodology using the most recently available information at the time of issuance of this final rule with comment period.

c. Biosimilar Biological Products

For CY 2016, we finalized a policy to pay for biosimilar biological products based on the payment allowance of the product as determined under section 1847A of the Act and to subject nonpass-through biosimilar biological products to our annual threshold-packaged policy (80 FR 70445 through 70446). In the CY 2017 OPPS/ASC proposed rule (81 FR 45664), for CY 2017, we proposed to continue this same payment policy for biosimilar biological products.

We received several public comments on the proposed HCPCS coding and modifiers for biosimilar biological products. As proposed, under the OPPS, we will use the HCPCS codes and modifiers for biosimilar biological products based on the policy established under the CY 2016 MPFS final rule with comment period. Therefore, we are considering the public comments received on biosimilar biological product HCPCS coding and modifiers in response to the CY 2017 OPPS/ASC proposed rule to be outside the scope to the proposed rule and we are not addressing them in this CY 2017 OPPS/ASC final rule with comment period. We refer readers to the CY 2017 MPFS final rule with comment period.

We are finalizing our proposal, without modification, to pay for biosimilar biological products based on the payment allowance of the product as determined under section 1847A of the Act. In addition, we are finalizing our proposal, without modification, to subject nonpass-through biosimilar biological products to our annual threshold-packaged policy.

3. Payment Policy for Therapeutic Radiopharmaceuticals

In the CY 2017 OPPS/ASC proposed rule (81 FR 45664), for CY 2017, we proposed to continue the payment policy for therapeutic radiopharmaceuticals that began in CY 2010. We pay for separately paid therapeutic radiopharmaceuticals under the ASP methodology adopted for separately payable drugs and biologicals. If ASP information is unavailable for a therapeutic radiopharmaceutical, we base therapeutic radiopharmaceutical payment on mean unit cost data derived from hospital claims. We believe that the rationale outlined in the CY 2010 OPPS/ASC final rule with comment period (74 FR 60524 through 60525) for applying the principles of separately payable drug pricing to therapeutic radiopharmaceuticals continues to be appropriate for nonpass-through, separately payable therapeutic radiopharmaceuticals in CY 2017. Therefore, we proposed for CY 2017 to pay all nonpass-through, separately payable therapeutic radiopharmaceuticals at ASP+6 percent, based on the statutory default described in section 1833(t)(14)(A)(iii)(II) of the Act. For a full discussion of ASP-based payment for therapeutic radiopharmaceuticals, we refer readers to the CY 2010 OPPS/ASC final rule with comment period (74 FR 60520 through 60521). We also proposed to rely on CY 2015 mean unit cost data derived from hospital claims data for payment rates for therapeutic radiopharmaceuticals for which ASP data are unavailable and to update the payment rates for separately payable therapeutic radiopharmaceuticals according to our usual process for updating the payment rates for separately payable drugs and biologicals on a quarterly basis if updated ASP information is available. For a complete history of the OPPS payment policy for therapeutic radiopharmaceuticals, we refer readers to the CY 2005 OPPS final rule with comment period (69 FR 65811), the CY 2006 OPPS final rule with comment period (70 FR 68655), and the CY 2010 OPPS/ASC final rule with comment period (74 FR 60524). The proposed CY 2017 payment rates for nonpass-through, separately payable therapeutic radiopharmaceuticals were in Addenda A and B to the proposed rule (which are available via the Internet on the CMS Web site).

Comment: Commenters supported CMS' proposal to pay for separately payable therapeutic radiopharmaceuticals under the statutory default payment rate of ASP+6 percent if ASP data are submitted to CMS.

Response: We appreciate the commenters' support. We continue to believe that providing payment for therapeutic radiopharmaceuticals based on ASP or mean unit cost if ASP information is not available would provide appropriate payment for these products. When ASP data are not available, we believe that paying for therapeutic radiopharmaceuticals using mean unit cost will appropriately pay for the average hospital acquisition and associated handling costs of non-pass-through separately payable therapeutic radiopharmaceuticals. As we stated in the CY 2010 OPPS/ASC final rule with comment period (74 FR 60523), although using mean unit cost for payment for therapeutic radiopharmaceuticals when ASP data are not available is not the usual OPPS process (the usual process relies on alternative data sources such as WAC or AWP when ASP information is temporarily unavailable, prior to defaulting to the mean unit cost from hospital claims data), we continue to believe that WAC or AWP is not an appropriate proxy to provide OPPS payment for average therapeutic radiopharmaceutical acquisition cost and associated handling costs when manufacturers are not required to submit ASP data. Payment based on WAC or AWP under the established

OPPS methodology for payment of separately payable drugs and biologicals is usually temporary for a calendar quarter until a manufacturer is able to submit the required ASP data in accordance with the quarterly ASP submission timeframes for reporting under section 1847A of the Act. Because ASP reporting for OPPS payment of separately payable therapeutic radiopharmaceuticals is not required, a manufacturer's choice to not submit ASP could result in payment for a separately payable therapeutic radiopharmaceutical based on WAC or AWP for a full year, a result that we believe would be inappropriate.

After consideration of the public comments we received, we are finalizing our proposal, without modification, to continue to pay all non-pass-through, separately payable therapeutic radiopharmaceuticals at ASP+6 percent. We also are finalizing our proposal to continue to rely on CY 2015 mean unit cost data derived from hospital claims data for payment rates for therapeutic radiopharmaceuticals for which ASP data are unavailable. The CY 2017 final rule payment rates for nonpass-through separately payable therapeutic radiopharmaceuticals are included in Addenda A and B to this final rule with comment period (which are available via the Internet on the CMS Web site).

4. Payment Adjustment Policy for Radioisotopes Derived From Non-Highly Enriched Uranium Sources

Radioisotopes are widely used in modern medical imaging, particularly for cardiac imaging and predominantly for the Medicare population. Some of the Technetium-99 (Tc-99m), the radioisotope used in the majority of such diagnostic imaging services, is produced in legacy reactors outside of the United States using highly enriched uranium (HEU).

The United States would like to eliminate domestic reliance on these reactors, and is promoting the conversion of all medical radioisotope production to non-HEU sources. Alternative methods for producing Tc-99m without HEU are technologically and economically viable, and conversion to such production has begun. We expect that this change in the supply source for the radioisotope used for modern medical imaging will introduce new costs into the payment system that are not accounted for in the historical claims data.

Therefore, beginning in CY 2013, we finalized a policy to provide an additional payment of $10 for the marginal cost for radioisotopes produced by non-HEU sources (77 FR 68323). Under this policy, hospitals report HCPCS code Q9969 (Tc-99m from non-highly enriched uranium source, full cost recovery add-on per study dose) once per dose along with any diagnostic scan or scans furnished using Tc-99m as long as the Tc-99m doses used can be certified by the hospital to be at least 95 percent derived from non-HEU sources (77 FR 68321).

We stated in the CY 2013 OPPS/ASC final rule with comment period (77 FR 68321) that our expectation is that this additional payment will be needed for the duration of the industry's conversion to alternative methods to producing Tc-99m without HEU. We also stated that we would reassess, and propose if necessary, on an annual basis whether such an adjustment continued to be necessary and whether any changes to the adjustment were warranted (77 FR 68316). We have reassessed this payment for CY 2017 and did not identify any new information that would cause us to modify payment. Therefore, in the CY 2017 OPPS/ASC proposed rule (81 FR 45665), for CY 2017, we proposed to continue to provide an additional $10 payment for radioisotopes produced by non-HEU sources.

Comment: Some commenters supported CMS' proposal to provide an additional $10 payment for radioisotopes produced by non-HEU sources and asked that CMS work with stakeholders regarding a phase-out plan based on utilization and adoption of non-HEU technetium by the radiopharmaceutical manufacturers. Another commenter requested that CMS provide an explanation for not applying an annual inflation update to the $10 payment for radioisotopes produced by non-HEU sources, provide details on plans to offset nuclear medicine procedures by the amount of cost paid through the non-HEU policy, and make available to the public data regarding claims submitted to date under this policy. The commenter also stated that CMS should assess whether the beneficiary copayment policy is adversely impacting patient access.

Response: We appreciate commenters' support. As stated earlier, we support efforts by all of the involved stakeholders to convert all medical radioisotope production to non-HEU sources. Regarding the comment requesting that we increase the $10 payment for HCPCS code Q9969 (by an inflation update or some other amount) for CY 2017, we currently lack sufficient additional information to suggest that an add-on payment greater than $10 would be more appropriate. Regarding the request for payment information for services described by HCPCS code Q9969, the following are the most currently available total Medicare payments for services described by HCPCS code Q9969 for each year in which it has been in effect: CY 2013 ($17,164); CY 2014 ($66,609); and CY 2015 ($106,584). Also, we do not believe that beneficiary copayments for services described by HCPCS code Q9969 are adversely impacting beneficiary access to any medically necessary services. The 20-percent copayment amount on the $10 total payment for HCPCS code Q9969 is only $2. Any Medicare beneficiary who is unable to afford this $2 copayment would almost certainly have some form of government assistance that would cover this copayment amount. Therefore, we do not believe that the copayment requirements for services described by HCPCS code Q9969 are negatively impacting access to medical care for Medicare beneficiaries.

After consideration of the public comments we received, we are finalizing our proposal, without modification, to continue the policy of providing an additional $10 payment for radioisotopes produced by non-HEU sources for CY 2017, which will be the fifth year in which this policy is in effect in the OPPS. We will continue to reassess this policy annually, consistent with the original policy in the CY 2013 OPPS/ASC final rule with comment period (77 FR 68321).

5. Payment for Blood Clotting Factors

For CY 2016, we provided payment for blood clotting factors under the same methodology as other nonpass-through separately payable drugs and biologicals under the OPPS and continued paying an updated furnishing fee (80 FR 70441). That is, for CY 2016, we provided payment for blood clotting factors under the OPPS at ASP+6 percent, plus an additional payment for the furnishing fee. We note that when blood clotting factors are provided in physicians' offices under Medicare Part B and in other Medicare settings, a furnishing fee is also applied to the payment. The CY 2016 updated furnishing fee was $0.202 per unit.

In the CY 2017 OPPS/ASC proposed rule (81 FR 45665), for CY 2017, we proposed to pay for blood clotting factors at ASP+6 percent, consistent with our proposed payment policy for other nonpass-through, separately payable drugs and biologicals, and to continue our policy for payment of the furnishing fee using an updated amount. Our policy to pay for a furnishing fee for blood clotting factors under the OPPS is

consistent with the methodology applied in the physician's office and in the inpatient hospital setting. These methodologies were first articulated in the CY 2006 OPPS final rule with comment period (70 FR 68661) and later discussed in the CY 2008 OPPS/ASC final rule with comment period (72 FR 66765). The proposed furnishing fee update was based on the percentage increase in the Consumer Price Index (CPI) for medical care for the 12-month period ending with June of the previous year. Because the Bureau of Labor Statistics releases the applicable CPI data after the MPFS and OPPS/ASC proposed rules are published, we were not able to include the actual updated furnishing fee in the proposed rules. Therefore, in accordance with our policy, as finalized in the CY 2008 OPPS/ASC final rule with comment period (72 FR 66765), we proposed to announce the actual figure for the percent change in the applicable CPI and the updated furnishing fee calculated based on that figure through applicable program instructions and posting on the CMS Web site at: *http://www.cms.gov/Medicare/Medicare-Fee-for-Service-Part-B-Drugs/McrPartBDrugAvgSalesPrice/index.html.*

Comment: One commenter supported CMS' proposal to continue its longstanding policy for payment of the furnishing fee for blood clotting factors administered or dispensed in the hospital outpatient department at the same level as in the physician office setting.

Response: We appreciate the commenter's support.

After consideration of the public comments we received, we are finalizing our proposal, without modification, to provide payment for blood clotting factors under the same methodology as other separately payable drugs and biologicals under the OPPS and to continue payment of an updated furnishing fee. We will announce the actual figure of the percent change in the applicable CPI and the updated furnishing fee calculation based on that figure through the applicable program instructions and posting on the CMS Web site.

6. Payment for Nonpass-Through Drugs, Biologicals, and Radiopharmaceuticals With HCPCS Codes But Without OPPS Hospital Claims Data

In the CY 2017 OPPS/ASC proposed rule (81 FR 45665), for CY 2017, we proposed to continue to use the same payment policy as in CY 2016 for nonpass-through drugs, biologicals, and radiopharmaceuticals with HCPCS codes but without OPPS hospital claims data (80 FR 70443). The proposed CY 2017 payment status of each of the nonpass-through drugs, biologicals, and radiopharmaceuticals with HCPCS codes but without OPPS hospital claims data was listed in Addendum B to the proposed rule, which is available via the Internet on the CMS Web site.

We did not receive any specific public comments regarding our proposed payment for nonpass-through drugs, biologicals, and radiopharmaceuticals with HCPCS codes, but without OPPS hospital claims data. Therefore, we are finalizing our CY 2017 proposal without modification, including our proposal to assign drug or biological products status indicator ''K'' and pay for them separately for the remainder of CY 2017 if pricing information becomes available. The CY 2017 payment status of each of the nonpass-through drugs, biologicals, and radiopharmaceuticals with HCPCS codes but without OPPS hospital claims data is listed in Addendum B to this final rule with comment period, which is available via the Internet on the CMS Web site.

VI. Estimate of OPPS Transitional Pass-Through Spending for Drugs, Biologicals, Radiopharmaceuticals, and Devices

A. Background

Section 1833(t)(6)(E) of the Act limits the total projected amount of transitional pass-through payments for drugs, biologicals, radiopharmaceuticals, and categories of devices for a given year to an ''applicable percentage,'' currently not to exceed 2.0 percent of total program payments estimated to be made for all covered services under the OPPS furnished for that year. If we estimate before the beginning of the calendar year that the total amount of pass-through payments in that year would exceed the applicable percentage, section 1833(t)(6)(E)(iii) of the Act requires a uniform prospective reduction in the amount of each of the transitional pass-through payments made in that year to ensure that the limit is not exceeded. We estimate the pass-through spending to determine whether payments exceed the applicable percentage and the appropriate prorata reduction to the conversion factor for the projected level of pass-through spending in the following year to ensure that total estimated pass-through spending for the prospective payment year is budget neutral, as required by section 1833(t)(6)(E) of the Act.

For devices, developing an estimate of pass-through spending in CY 2017 entails estimating spending for two groups of items. The first group of items consists of device categories that are currently eligible for pass-through payment and that will continue to be eligible for pass-through payment in CY 2017. The CY 2008 OPPS/ASC final rule with comment period (72 FR 66778) describes the methodology we have used in previous years to develop the pass-through spending estimate for known device categories continuing into the applicable update year. The second group of items consists of items that we know are newly eligible, or project may be newly eligible, for device pass-through payment in the remaining quarters of CY 2016 or beginning in CY 2017. The sum of the CY 2017 pass-through spending estimates for these two groups of device categories equals the total CY 2017 pass-through spending estimate for device categories with pass-through payment status. We base the device pass-through estimated payments for each device category on the amount of payment as established in section 1833(t)(6)(D)(ii) of the Act, and as outlined in previous rules, including the CY 2014 OPPS/ASC final rule with comment period (78 FR 75034 through 75036). We note that, beginning in CY 2010, the pass-through evaluation process and pass-through payment for implantable biologicals newly approved for pass-through payment beginning on or after January 1, 2010, that are surgically inserted or implanted (through a surgical incision or a natural orifice) use the device pass-through process and payment methodology (74 FR 60476). As has been our past practice (76 FR 74335), in the CY 2017 OPPS/ASC proposed rule (81 FR 45666), for CY 2017, we proposed to include an estimate of any implantable biologicals eligible for pass-through payment in our estimate of pass-through spending for devices. Similarly, we finalized a policy in CY 2015 that applications for pass-through payment for skin substitutes and similar products be evaluated using the medical device pass-through process and payment methodology (76 FR 66885 through 66888). Therefore, as we did beginning in CY 2015, for CY 2017, we also proposed to include an estimate of any skin substitutes and similar products in our estimate of pass-through spending for devices.

For drugs and biologicals eligible for pass-through payment, section 1833(t)(6)(D)(i) of the Act establishes the pass-through payment amount as the amount by which the amount authorized under section 1842(o) of the

Act (or, if the drug or biological is covered under a competitive acquisition contract under section 1847B of the Act, an amount determined by the Secretary equal to the average price for the drug or biological for all competitive acquisition areas and year established under such section as calculated and adjusted by the Secretary) exceeds the portion of the otherwise applicable fee schedule amount that the Secretary determines is associated with the drug or biological. Because we proposed to pay for most nonpass-through separately payable drugs and biologicals under the CY 2017 OPPS at ASP+6 percent, and because we proposed to pay for CY 2017 pass-through drugs and biologicals at ASP+6 percent, as we discussed in section V.A. of the proposed rule, our estimate of drug and biological pass-through payment for CY 2017 for this group of items was $0, as discussed below.

Furthermore, payment for certain drugs, specifically diagnostic radiopharmaceuticals and contrast agents without pass-through payment status, is packaged into payment for the associated procedures, and these products will not be separately paid. In addition, we policy-package all nonpass-through drugs, biologicals, and radiopharmaceuticals that function as supplies when used in a diagnostic test or procedure and drugs and biologicals that function as supplies when used in a surgical procedure, as discussed in section II.A.3. of the proposed rule and this final rule with comment period. In the CY 2017 OPPS/ASC proposed rule (81 FR 45666), we proposed that all of these policy-packaged drugs and biologicals with pass-through payment status would be paid at ASP+6 percent, like other pass-through drugs and biologicals, for CY 2017. Therefore, our estimate of pass-through payment for policy-packaged drugs and biologicals with pass-through payment status approved prior to CY 2017 was not $0, as discussed below. In section V.A.5. of the proposed rule, we discussed our policy to determine if the costs of certain policy-packaged drugs or biologicals are already packaged into the existing APC structure. If we determine that a policy-packaged drug or biological approved for pass-through payment resembles predecessor drugs or biologicals already included in the costs of the APCs that are associated with the drug receiving pass-through payment, we proposed to offset the amount of pass-through payment for the policy-packaged drug or biological. For these drugs or biologicals, the APC offset amount is the portion of the APC payment for the specific procedure performed with the pass-through drug or biological, which we refer to as the policy-packaged drug APC offset amount. If we determine that an offset is appropriate for a specific policy-packaged drug or biological receiving pass-through payment, we proposed to reduce our estimate of pass-through payments for these drugs or biologicals by this amount.

Similar to pass-through estimates for devices, the first group of drugs and biologicals requiring a pass-through payment estimate consists of those products that were recently made eligible for pass-through payment and that will continue to be eligible for pass-through payment in CY 2017. The second group contains drugs and biologicals that we know are newly eligible, or project will be newly eligible in the remaining quarters of CY 2016 or beginning in CY 2017. The sum of the CY 2017 pass-through spending estimates for these two groups of drugs and biologicals equals the total CY 2017 pass-through spending estimate for drugs and biologicals with pass-through payment status.

B. Estimate of Pass-Through Spending

In the CY 2017 OPPS/ASC proposed rule (81 FR 45666), we proposed to set the applicable pass-through payment percentage limit at 2.0 percent of the total projected OPPS payments for CY 2017, consistent with section 1833(t)(6)(E)(ii)(II) of the Act and our OPPS policy from CY 2004 through CY 2016 (80 FR 70446 through 70448).

For the first group, consisting of device categories that are currently eligible for pass–through payment and will continue to be eligible for pass-through payment in CY 2017, there are three active categories for CY 2017. For CY 2016, we established one new device category subsequent to the publication of the CY 2016 OPPS/ASC proposed rule, HCPCS code C1822 (Generator, neurostimulator (implantable), high frequency, with rechargeable battery and charging system), that was effective January 1, 2016. We estimated that the device described by HCPCS code C1822 will cost $1 million in pass-through expenditures in CY 2017. Effective April 1, 2015, we established that the device described by HCPCS code C2623 (Catheter, transluminal angioplasty, drug-coated, non-laser) will be eligible for pass-through payment. We estimated that the device described by HCPCS code C2623 will cost $97 million in pass-through expenditures in CY 2017. Effective July 1, 2015, we established that the device described by HCPCS code C2613 (Lung biopsy plug with delivery system) will be eligible for pass-through payment. We estimated that the device described by HCPCS code C2613 will cost $4.7 million in pass-through expenditures in CY 2017. Based on the three device categories of HCPCS codes C1822, C2623, and C2613, we proposed an estimate for the first group of devices of $102.7 million.

We did not receive any public comments on our proposed estimate for the first group of devices that included HCPCS codes C1822, C2623 and C2613. Therefore, we are finalizing the proposed estimate for this first group of devices of $102.7 million for CY 2017.

In estimating our proposed CY 2017 pass-through spending for device categories in the second group, we included: device categories that we knew at the time of the development of the proposed rule will be newly eligible for pass-through payment in CY 2017; additional device categories that we estimated could be approved for pass-through status subsequent to the development of the proposed rule and before January 1, 2017; and contingent projections for new device categories established in the second through fourth quarters of CY 2017. In the CY 2017 OPPS/ASC proposed rule (81 FR 45667), we proposed to use the general methodology described in the CY 2008 OPPS/ASC final rule with comment period (72 FR 66778), while also taking into account recent OPPS experience in approving new pass-through device categories. For the proposed rule, the estimate of CY 2017 pass-through spending for this second group of device categories was $10 million.

We did not receive any public comments on our proposed estimate for the second group of devices. Therefore, we are finalizing the proposed estimate for this second group of devices of $10 million for CY 2017.

To estimate proposed CY 2017 pass-through spending for drugs and biologicals in the first group, specifically those drugs and biologicals recently made eligible for pass-through payment and continuing on pass-through payment status for CY 2017, we proposed to use the most recent Medicare physician claims data regarding their utilization, information provided in the respective pass-through applications, historical hospital claims data, pharmaceutical industry information, and clinical information regarding those drugs or biologicals to project the CY 2017 OPPS utilization of the products.

For the known drugs and biologicals (excluding policy-packaged diagnostic radiopharmaceuticals, contrast agents, drugs, biologicals, and

radiopharmaceuticals that function as supplies when used in a diagnostic test or procedure, and drugs and biologicals that function as supplies when used in a surgical procedure) that will be continuing on pass-through payment status in CY 2017, we estimated the pass-through payment amount as the difference between ASP+6 percent and the payment rate for nonpass-through drugs and biologicals that will be separately paid at ASP+6 percent, which is zero for this group of drugs. Because payment for policy-packaged drugs and biologicals is packaged if the product was not paid separately due to its pass-through payment status, we proposed to include in the CY 2017 pass-through estimate the difference between payment for the policy-packaged drug or biological at ASP+6 percent (or WAC+6 percent, or 95 percent of AWP, if ASP or WAC information is not available) and the policy-packaged drug APC offset amount, if we determine that the policy-packaged drug or biological approved for pass-through payment resembles a predecessor drug or biological already included in the costs of the APCs that are associated with the drug receiving pass-through payment. For the proposed rule, using the proposed methodology described above, we calculated a CY 2017 proposed spending estimate for this first group of drugs and biologicals of approximately $19.0 million.

We did not receive any public comments on our proposed spending estimate for this first group of drugs and biologicals. For this final rule with comment period, we calculated a CY 2017 spending estimate for this first group of drugs and biologicals of approximately $20.2 million.

To estimate proposed CY 2017 pass-through spending for drugs and biologicals in the second group (that is, drugs and biologicals that we knew at the time of development of the proposed rule were newly eligible for pass-through payment in CY 2017, additional drugs and biologicals that we estimated could be approved for pass-through status subsequent to the development of the proposed rule and before January 1, 2016, and projections for new drugs and biologicals that could be initially eligible for pass-through payment in the second through fourth quarters of CY 2017), we proposed to use utilization estimates from pass-through applicants, pharmaceutical industry data, clinical information, recent trends in the per unit ASPs of hospital outpatient drugs, and projected annual changes in service volume and intensity as our basis for making the CY 2017 pass-through payment estimate. We also proposed to consider the most recent OPPS experience in approving new pass-through drugs and biologicals. Using our proposed methodology for estimating CY 2017 pass-through payments for this second group of drugs, we calculated a proposed spending estimate for this second group of drugs and biologicals of approximately $16.6 million.

We did not receive any public comments on our proposed methodology or the proposed spending estimate for this second group of drugs. Therefore, for CY 2017, we are continuing to use the general methodology described above. For this final rule with comment period, we calculated a CY 2017 spending estimate for this second group of drugs and biologicals of approximately $17.7 million.

In summary, in accordance with the methodology described earlier in this section, for this final rule with comment period, we estimate that total pass-through spending for the device categories and the drugs and biologicals that are continuing to receive pass-through payment in CY 2017 and those device categories, drugs, and biologicals that first become eligible for pass-through payment during CY 2017 is approximately $150.6 million (approximately $112.7 million for device categories and approximately $37.9 million for drugs and biologicals), which represents 0.24 percent of total projected OPPS payments for CY 2017. Therefore, we estimate that pass-through spending in CY 2017 will not amount to 2.0 percent of total projected OPPS CY 2017 program spending.

VII. OPPS Payment for Hospital Outpatient Visits and Critical Care Services

In the CY 2017 OPPS/ASC proposed rule (81 FR 45667), for CY 2017, we proposed to continue with and did not propose any changes to our current clinic and emergency department (ED) hospital outpatient visits payment policies. For a description of the current clinic and ED hospital outpatient visits policies, we refer readers to the CY 2016 OPPS/ASC final rule with comment period (80 FR 70448). We also proposed to continue with and did not propose any change to our payment policy for critical care services for CY 2017. For a description of the current payment policy for critical care services, we refer readers to the CY 2016 OPPS/ASC final rule with comment period (80 FR 70449), and for the history of the payment policy for critical care services, we refer readers to the CY 2014 OPPS/ASC final rule with comment period (78 FR 75043). In the proposed rule, we sought public comments on any changes to these codes that we should consider for future rulemaking cycles. We encouraged those parties who comment to provide the data and analysis necessary to justify any proposed changes.

We did not receive any public comments on this proposal. Therefore we are finalizing our CY 2017 proposal, without modification, to continue our current clinic and ED hospital outpatient visits and critical care services payment policies.

VIII. Payment for Partial Hospitalization Services

A. Background

A partial hospitalization program (PHP) is an intensive outpatient program of psychiatric services provided as an alternative to inpatient psychiatric care for individuals who have an acute mental illness. Section 1861(ff)(1) of the Act defines partial hospitalization services as the items and services described in paragraph (2) prescribed by a physician and provided under a program described in paragraph (3) under the supervision of a physician pursuant to an individualized, written plan of treatment established and periodically reviewed by a physician (in consultation with appropriate staff participating in such program), which sets forth the physician's diagnosis, the type, amount, frequency, and duration of the items and services provided under the plan, and the goals for treatment under the plan. Section 1861(ff)(2) of the Act describes the items and services included in partial hospitalization services. Section 1861(ff)(3)(A) of the Act specifies that a PHP is a program furnished by a hospital to its outpatients or by a community mental health center (CMHC) (as defined in subparagraph (B)), and which is a distinct and organized intensive ambulatory treatment service offering less than 24-hour-daily care other than in an individual's home or in an inpatient or residential setting. Section 1861(ff)(3)(B) of the Act defines a CMHC for purposes of this benefit.

Section 1833(t)(1)(B)(i) of the Act provides the Secretary with the authority to designate the OPD services to be covered under the OPPS. The Medicare regulations that implement this provision specify, under 42 CFR 419.21, that payments under the OPPS will be made for partial hospitalization services furnished by CMHCs as well as Medicare Part B services furnished to hospital outpatients designated by the

Secretary, which include partial hospitalization services (65 FR 18444 through 18445).

Section 1833(t)(2)(C) of the Act requires the Secretary to establish relative payment weights for covered OPD services (and any groups of such services described in section 1833(t)(2)(B) of the Act) based on median (or, at the election of the Secretary, mean) hospital costs using data on claims from 1996 and data from the most recent available cost reports. In pertinent part, section 1833(t)(2)(B) of the Act provides that the Secretary may establish groups of covered OPD services, within a classification system developed by the Secretary for covered OPD services, so that services classified within each group are comparable clinically and with respect to the use of resources. In accordance with these provisions, we have developed the PHP APCs. Because a day of care is the unit that defines the structure and scheduling of partial hospitalization services, we established a per diem payment methodology for the PHP APCs, effective for services furnished on or after July 1, 2000 (65 FR 18452 through 18455). Under this methodology, the median per diem costs were used to calculate the relative payment weights for the PHP APCs. Section 1833(t)(9)(A) of the Act requires the Secretary to review, not less often than annually, and revise the groups, the relative payment weights, and the wage and other adjustments described in section 1833(t)(2) of the Act to take into account changes in medical practice, changes in technology, the addition of new services, new cost data, and other relevant information and factors.

We began efforts to strengthen the PHP benefit through extensive data analysis and policy and payment changes finalized in the CY 2008 OPPS/ASC final rule with comment period (72 FR 66670 through 66676). In that final rule, we made two refinements to the methodology for computing the PHP median: The first remapped 10 revenue codes that are common among hospital-based PHP claims to the most appropriate cost centers; and the second refined our methodology for computing the PHP median per diem cost by computing a separate per diem cost for each day rather than for each bill.

In CY 2009, we implemented several regulatory, policy, and payment changes, including a two-tiered payment approach for partial hospitalization services under which we paid one amount for days with 3 services under PHP APC 0172 (Level 1 Partial Hospitalization) and a higher amount for days with 4 or more services under PHP APC 0173 (Level 2 Partial Hospitalization) (73 FR 68688 through 68693). We also finalized our policy to deny payment for any PHP claims submitted for days when fewer than 3 units of therapeutic services are provided (73 FR 68694). Furthermore, for CY 2009, we revised the regulations at 42 CFR 410.43 to codify existing basic PHP patient eligibility criteria and to add a reference to current physician certification requirements under 42 CFR 424.24 to conform our regulations to our longstanding policy (73 FR 68694 through 68695). We also revised the partial hospitalization benefit to include several coding updates (73 FR 68695 through 68697).

For CY 2010, we retained the two-tiered payment approach for partial hospitalization services and used only hospital-based PHP data in computing the PHP APC per diem costs, upon which PHP APC per diem payment rates are based. We used only hospital-based PHP data because we were concerned about further reducing both PHP APC per diem payment rates without knowing the impact of the policy and payment changes we made in CY 2009. Because of the 2-year lag between data collection and rulemaking, the changes we made in CY 2009 were reflected for the first time in the claims data that we used to determine payment rates for the CY 2011 rulemaking (74 FR 60556 through 60559).

In the CY 2011 OPPS/ASC final rule with comment period (75 FR 71994), we established four separate PHP APC per diem payment rates: Two for CMHCs (APC 0172 (for Level 1 services) and APC 0173 (for Level 2 services)) and two for hospital-based PHPs (APC 0175 (for Level 1 services) and 0176 (for Level 2 services)), based on each provider type's own unique data. In addition, in accordance with section 1301(b) of the Health Care and Education Reconciliation Act of 2010 (HCERA 2010), we amended the description of a PHP in our regulations to specify that a PHP must be a distinct and organized intensive ambulatory treatment program offering less than 24-hour daily care other than in an individual's home or in an inpatient or residential setting. In accordance with section 1301(a) of HCERA 2010, we revised the definition of a CMHC in the regulations to conform to the revised definition now set forth under section 1861(ff)(3)(B) of the Act (75 FR 71990). For CY 2011, we also instituted a 2-year transition period for CMHCs to the CMHC APC per diem payment rates based solely on CMHC data. Under the transition methodology, CMHC APCs Level 1 and Level 2 per diem costs were calculated by taking 50 percent of the difference between the CY 2010 final hospital-based PHP median costs and the CY 2011 final CMHC median costs and then adding that number to the CY 2011 final CMHC median costs. A 2-year transition under this methodology moved us in the direction of our goal, which is to pay appropriately for partial hospitalization services based on each provider type's data, while at the same time allowing providers time to adjust their business operations and protect access to care for Medicare beneficiaries. We also stated that we would review and analyze the data during the CY 2012 rulemaking cycle and, based on these analyses, we might further refine the payment mechanism. We refer readers to section X.B. of the CY 2011 OPPS/ASC final rule with comment period (75 FR 71991 through 71994) for a full discussion.

For CY 2012, as discussed in the CY 2012 OPPS/ASC final rule with comment period (76 FR 74348 through 74352), we determined the relative payment weights for partial hospitalization services provided by CMHCs based on data derived solely from CMHCs and the relative payment weights for partial hospitalization services provided by hospital-based PHPs based exclusively on hospital data.

In the CY 2013 OPPS/ASC final rule with comment period, we finalized our proposal to base the relative payment weights that underpin the OPPS APCs, including the four PHP APCs (APCs 0172, 0173, 0175, and 0176), on geometric mean costs rather than on the median costs. We established these four PHP APC per diem payment rates based on geometric mean cost levels calculated using the most recent claims and cost data for each provider type. For a detailed discussion on this policy, we refer readers to the CY 2013 OPPS/ASC final rule with comment period (77 FR 68406 through 68412).

In the CY 2014 OPPS/ASC proposed rule (78 FR 43621 through 43622), we solicited comments on possible future initiatives that may help to ensure the long-term stability of PHPs and further improve the accuracy of payment for PHP services, but proposed no changes. In the CY 2014 OPPS/ASC final rule with comment period (78 FR 75050 through 75053), we summarized the comments received on those possible future initiatives. We also continued to apply our established policies to calculate the four PHP APC per diem payment rates based on geometric mean per diem costs using the most recent claims data for each provider type. For a detailed discussion on this policy, we

refer readers to the CY 2014 OPPS/ASC final rule with comment period (78 FR 75050 through 75053).

In the CY 2015 OPPS/ASC final rule with comment period (79 FR 66902 through 66908), we continued to apply our established policies to calculate the four PHP APC per diem payment rates based on PHP APC geometric mean per diem costs, using the most recent claims and cost data for each provider type.

In the CY 2016 OPPS/ASC final rule with comment period (80 FR 70455 through 70465), we again continued to apply our established policies to calculate the four PHP APC per diem payment rates based on PHP APC geometric mean per diem costs, using the most recent claims and cost data for each provider type. We also implemented a trim to remove hospital-based PHP service days that use a CCR that was greater than 5 (CCR>5) to calculate costs for at least one of their component services, and a trim on CMHCs with an average cost per day that is above or below 2 (±2) standard deviations from the mean. We also renumbered the PHP APCs which were previously 0172, 0173, 0175, and 0176, to 5851, 5852, 5861, and 5862, respectively. For a detailed discussion of the PHP ratesetting process, we refer readers to the CY 2016 OPPS/ASC final rule with comment period (80 FR 70462 through 70467).

In the effort to increase the accuracy of the PHP per diem costs, in the CY 2016 OPPS/ASC final rule with comment period (80 FR 70455 through 70461), we completed an extensive analysis of the claims and cost data, which included provider service usage, coding practices, and the ratesetting methodology. This extensive analysis identified provider coding errors that were inappropriately removing costs from ratesetting, and aberrant data from several providers that were affecting the calculation of the proposed PHP geometric mean per diem costs. Aberrant data are claims and/or cost data that are so abnormal that they skew the resulting geometric mean per diem costs. For example, we found claims with excessive CMHC charges resulting in CMHC geometric mean costs per day that were approximately the same as or more than the daily payment for inpatient psychiatric facility services. For an outpatient program like the PHP, which does not incur room and board costs such as an inpatient stay would, these costs per day were excessive. In addition, we found some CMHCs had very low costs per day (less than $25 per day). We stated in the CY 2016 OPPS/ASC final rule with comment period (80 FR 70456) that, without using a trimming process, the data from these providers would inappropriately skew the geometric mean per diem cost for Level 2 CMHC services. Further analysis of the data confirmed that there were a few providers with extreme cost per day values, which led us to propose and finalize a ±2 standard deviation trim on CMHC costs per day.

During our claims and cost data analysis, we also found aberrant data from some hospital-based PHP providers. The existing OPPS ±3 standard deviation trim removed very extreme CCRs by defaulting two providers that failed this trim to their overall hospital ancillary CCR. However, the calculation of the ±3 standard deviations used to define the trim was influenced by these two providers, which had extreme CCRs greater than 175. Because these two hospital-based PHP providers remained in the data when we calculated the boundaries of the OPPS ±3 standard deviation trim in the CY 2016 ratesetting, the upper limit of the trim boundaries was fairly high, at 28.3446. As such, some aberrant CCRs were not trimmed out, and still had high values ranging from 6.3840 to 19.996. We note that, as stated in the CY 2016 OPPS/ASC proposed rule (80 FR 39242 and 39293) and reiterated in the CY 2016 OPPS/ASC final rule with comment period (80 FR 70456), OPPS defines a biased CCR as one that falls outside the predetermined ceiling threshold for a valid CCR; using CY 2014 cost report data, that threshold is 1.5.

In order to reduce or eliminate the impact of aberrant data received from a few CMHCs and hospital-based PHP providers in the claims data used for ratesetting, we finalized the application of a ±2 standard deviation trim on cost per day for CMHCs and a CCR>5 hospital service day trim for hospital-based PHP providers for CY 2016 and subsequent years (80 FR 70456 through 70459). In addition, in the CY 2016 OPPS/ASC final rule with comment period (80 FR 70459 through 70460), a cost inversion occurred in the final rule data with respect to hospital-based PHP providers. A cost inversion exists when the Level 1 PHP APC geometric mean per diem cost for providing exactly 3 services per day exceeds the Level 2 PHP APC geometric mean per diem cost for providing 4 or more services per day. We corrected the cost inversion with an equitable adjustment to the actual geometric mean per diem costs by increasing the Level 2 hospital-based PHP APC geometric mean per diem costs and decreasing the Level 1 hospital-based PHP APC geometric mean per diem costs by the same factor, to result in a percentage difference equal to the average percent difference between the hospital-based Level 1 PHP APC and the Level 2 PHP APC for partial hospitalization services from CY 2013 through CY 2015.

For a comprehensive description on the background of PHP payment policy, we refer readers to the CY 2016 OPPS/ASC final rule with comment period (80 FR 70453 through 70455).

B. PHP APC Update for CY 2017

1. PHP APC Changes and Effects on Geometric Mean Per Diem Costs

For CY 2017, in the CY 2017 OPPS/ASC proposed rule (81 FR 45669 through 45673), we proposed to continue to apply our established policies to calculate the PHP APC per diem payment rates based on geometric mean per diem costs using the most recent claims and cost data for each provider type. However, as explained in greater detail below, we proposed to combine the Level 1 and Level 2 PHP APCs for CMHCs and to combine the Level 1 and Level 2 APCs for hospital-based PHPs because we believe this would best reflect actual geometric mean per diem costs going forward, provide more predictable per diem costs, particularly given the small number of CMHCs, and generate more appropriate payments for these services by avoiding the cost inversions that hospital-based PHPs experienced in the CY 2016 OPPS/ASC final rule with comment period (80 FR 70459).

a. Changes to PHP APCs

In the CY 2017 OPPS/ASC proposed rule (81 FR 45669 through 45673), we proposed to combine the existing two-tiered PHP APCs for CMHCs into a single PHP APC and the existing two-tiered hospital-based PHP APCs into a single PHP APC. Specifically, we proposed to replace existing CMHC APCs 5851 (Level 1 Partial Hospitalization (3 services) for CMHCs) and 5852 (Level 2 Partial Hospitalization (4 or more services) for CMHCs) with proposed new CMHC APC 5853 (Partial Hospitalization (3 or More Services Per Day)), and to replace existing hospital-based PHP APCs 5861 (Level 1 Partial Hospitalization (3 services) for Hospital-based PHPs) and 5862 (Level 2 Partial Hospitalization (4 or more services) for Hospital-based PHPs) with proposed new hospital-based PHP APC 5863 (Partial Hospitalization (3 or More Services Per Day)). In conjunction with this proposal, we proposed to combine the geometric mean per diem costs for the existing Level 1 and Level 2 PHP APCs for

CMHCs (APC 5851 and APC 5852, respectively) to calculate the proposed geometric mean per diem costs for proposed new PHP APC 5853 for CMHCs using only CY 2015 CMHC claims data and the most recent cost data, and to combine the geometric mean per diem costs for the existing Level 1 and Level 2 PHP APCs for hospital-based PHPs (APC 5861 and APC 5862, respectively) to calculate the proposed geometric mean per diem costs for proposed new PHP APC 5863 for hospital-based PHPs using only CY 2015 hospital-based PHP claims data and the most recent cost data, for CY 2017 and subsequent years. We discuss these computations in section VIII.B.2 of this preamble. The proposed geometric mean per diem costs were shown in Table 19 in section VIII.B.2. of the proposed rule.

Comment: MedPAC supported the proposal to combine the existing Level 1 and Level 2 APCs into a single new APC for providing 3 or more services. MedPAC stated that the logic in payment rates is vital to having a meaningful payment system, and further added that payment rates that are higher for an APC that provides fewer of the same types of services as another APC is not reasonable. However, several commenters opposed the proposal.

One commenter stated that the proposal would violate the Mental Health Parity and Addiction Equity Act of 2008 (MHPAEA, Pub. L. 110–343) because it limits mental health care to a cap of 3 or fewer treatment groups per day and reduces payments to below payments for comparable acute care services.

One commenter urged CMS to monitor the effects of combining the existing two-tiered APCs into a single PHP APC, by provider type, to ensure that these changes do not cause or contribute to any unintended consequences such as reducing access to PHP services, or incentivizing reductions in services provided under the single APC.

Response: We appreciate the commenters' support. We agree that it is reasonable to combine similar costs and services into the same APC payment. It is also worth noting that in CY 2014, when we requested public comments on possible future initiatives, we received several public comments requesting a single APC payment for PHP services (78 FR 75051).

We also agree that it is possible that the combined PHP APCs could incentivize a reduction in services under a single APC, with PHP providers providing more days with only 3 services per day, but receiving an APC payment that is heavily weighted toward providing 4 or more services. We have monitored utilization of 3-service days over the years, and found that 3-service days are appropriately infrequent. In the updated CY 2015 claims data reviewed for this final rule with comment period, we found that 5 percent of CMHC paid days and 12 percent of hospital-based PHP paid days indicated that exactly 3 services were provided. In addition, given the intensive nature of partial hospitalization services and that PHP services are provided in lieu of inpatient hospitalization, we have a longstanding eligibility requirement that PHP beneficiaries require at least 20 hours per week in services, as evidenced in their plan of care. We discuss this requirement more fully in section VIII.B.1.b. of this final rule with comment period. We will be monitoring PHP claims beginning in January 2017, to determine whether PHP participants are receiving at least 20 hours per week in partial hospitalization services. In particular, we will monitor whether the frequency of providing 3-service days increases now that the payment incentive to provide 4 or more services per day, as opposed to 3 services per day, has been removed through combining the two PHP APCs. Payments for claims will not be affected at this time. Rather, our goal is to implement claims edits in the future to ensure that eligible Medicare beneficiaries are receiving the intense level of services that the statute and regulations require PHPs to provide. We are soliciting public comments on what facility types, treatment patterns, and other indicators are most important to monitor to ensure adequate provision of services.

We disagree with the commenter who believed that combining the existing two-tiered PHP APCs would violate the provisions of the MHPAEA. The MHPAEA generally prevents group health plans and health insurance issuers that provide mental health or substance use disorder benefits from imposing less favorable benefit limitations on those benefits than on medical/surgical benefits. The mental health parity requirements of MHPAEA do not apply to Medicare. More information is available about the MHPAEA on the CMS Web site at: *https://www.cms.gov/cciio/programs-and-initiatives/other-insurance-protections/mhpaea_factsheet.html*.

In addition, we believe that the commenter is misinterpreting the proposal in stating that combining the two-tiered PHP APCs, by provider type, limits outpatient mental health care to a cap of 3 or fewer group therapy treatments per day. The combined PHP APCs will generate payments for 3 or *more* services per day, not for 3 or fewer services provided per day. A different policy, the outpatient mental health treatment cap, limits the maximum payment for a day of individually billed outpatient mental health services to the highest hospital-based PHP APC per diem, and is derived from the most recent provider claims and cost data. It does not cap the number of services that can be provided to a beneficiary. Beneficiaries may receive as many services as are reasonable and necessary for their treatment. As noted in the April 7, 2000 OPPS final rule (65 FR 18454 through 18455), our rationale for implementing the mental health treatment cap was that the costs associated with administering a PHP represent the most resource-intensive of all outpatient mental health treatment services. Therefore, we do not believe it would be appropriate to pay more for a day of individually billed outpatient mental health services than what is paid for a day providing 3 or more partial hospitalization services. We also are concerned that a provider may disregard a patient's need for the intensive active treatment offered by a PHP and opt to bill for individual services. The geometric mean per diem payment amount represents the cost of an average day of partial hospitalization services (the data used to calculate the geometric mean per diem costs were derived from all of the PHP data and include the most and least intensive days). It would not be appropriate for a provider to obtain more payment through component billing.

For CY 2017, the outpatient mental health treatment cap will be equal to the combined PHP APC 5863 geometric mean per diem rate for hospital-based PHPs. Because 88 percent of hospital-based PHP service days provide 4 or more services, the mental health cap is heavily weighted toward the cost of providing 4 or more services per day. This cap is applied to each day of outpatient mental health treatment provided outside of the PHP benefit.

After consideration of the public comments we received, we are finalizing our proposal to replace existing CMHC APCs 5851 (Level 1 Partial Hospitalization (3 services) for CMHCs) and 5852 (Level 2 Partial Hospitalization (4 or more services) for CMHCs) with new CMHC APC 5853 (Partial Hospitalization (3 or More Services Per Day)), and to replace existing hospital-based PHP APCs 5861 (Level 1 Partial Hospitalization (3 services) for Hospital-Based PHPs) and 5862 (Level 2 Partial Hospitalization (4

or more services) for Hospital-Based PHPs) with new hospital-based PHP APC 5863 (Partial Hospitalization (3 or More Services Per Day)). We also are finalizing our proposal to combine the geometric mean per diem costs for the existing Level 1 and Level 2 PHP APCs for CMHCs (APC 5851 and APC 5852, respectively) to calculate the final geometric mean per diem costs for new PHP APC 5853 for CMHCs using only CY 2015 CMHC claims data and the most recent cost data, and to combine the geometric mean per diem costs for the existing Level 1 and Level 2 PHP APCs for hospital-based PHPs (APC 5861 and APC 5862, respectively) to calculate the final geometric mean per diem costs for new PHP APC 5863 for hospital-based PHPs using only CY 2015 hospital-based PHP claims data and the most recent cost data, for CY 2017 and subsequent years.

As we previously noted, we believe that these finalized policies will best reflect actual geometric mean per diem costs in the future; provide more predictable geometric mean per diem costs, particularly given the small number of CMHCs; simplify and reduce administrative burden by only having one APC for each provider type; and generate more appropriate payments for these services by avoiding the cost inversions that hospital-based PHPs experienced in the CY 2016 OPPS/ASC final rule with comment period (80 FR 70459), and which were noted in the CY 2017 OPPS/ASC proposed rule (81 FR 45670 through 45672), and occurred again in geometric mean per diem cost calculations for this final rule with comment period as described in section VIII.B.1.b. of this final rule with comment period. The CY 2017 final geometric mean per diem costs are shown in Table 41 in section VIII.B.2. of this final rule with comment period. As noted earlier, we are soliciting public comments on how we can best target monitoring efforts to ensure adequate provision of services by hospital-based PHPs and CMHC.

b. Rationale for Changes in PHP APCs

One of the primary reasons for our decision to replace the existing Level 1 and Level 2 PHP APCs with a single PHP APC, by provider type, is because the new PHP APCs will avoid any further issues with cost inversions and, therefore, generate more appropriate payment for the services provided by specific provider types. As previously stated, a cost inversion exists when the Level 1 PHP APC geometric mean per diem cost for providing exactly 3 services per day exceeds the Level 2 PHP APC geometric mean per diem cost for providing 4 or more services per day, and, as we noted in last year's final rule with comment period, we do not believe that it is reasonable or appropriate to pay more for fewer services provided per day and to pay less for more services provided per day (80 FR 70459 through 70460).

To determine if the issue with hospital-based cost inversions that occurred in the data used for the CY 2016 OPPS/ASC final rule with comment period (80 FR 70459) would continue, we calculated the CY 2017 hospital-based PHP APC geometric mean per diem costs separately for Level 1 and Level 2 partial hospitalization services provided by hospital-based PHPs. After applying our established trims and exclusions, we determined that the CY 2017 Level 1 hospital-based PHP APC geometric mean per diem cost is $281.35 (proposed at $241.08) and the CY 2017 Level 2 hospital-based PHP APC geometric mean per diem cost is $210.50 (proposed at $187.06), which again demonstrates an inversion.

For the CY 2017 OPPS/ASC proposed rule, we analyzed the CY 2015 hospital-based PHP claims data used for the CY 2017 proposed rule to determine the source of the inversion between the Level 1 and Level 2 hospital-based PHP APCs geometric mean per diem costs, and found that 13 hospital-based PHPs had high geometric mean per diem costs per day. Two of those providers account for 11.5 percent of Level 1 hospital-based PHP service days, but only 1.9 percent of Level 2 hospital-based PHP service days. Eleven of those 13 providers only reported costs for Level 1 hospital-based PHP service days, which increased the geometric mean per diem costs for the Level 1 hospital-based PHP APC. There also were 3 hospital-based PHP providers with very low geometric mean costs per day that accounted for approximately 28 percent of the Level 2 hospital-based PHP service days, which decreased the geometric mean per diem costs for the Level 2 hospital-based PHP APC.

For this CY 2017 final rule with comment period, we found that the inversion of the Level 1 and Level 2 hospital-based PHP geometric mean per diem costs was caused by 3 providers with high-cost Level 1 service days, accounting for 16 percent of all Level 1 service days, and 1 low-cost provider accounting for 15 percent of all Level 2 service days. High volume providers heavily influence the cost data, and we believe that the high volume providers with very low Level 2 hospital-based PHP geometric mean per diem costs per day and high volume providers with very high Level 1 hospital-based PHP geometric mean per diem costs per day contributed to the inversion between the hospital-based PHP APCs Level 1 and Level 2 geometric mean per diem costs. In developing the policy to combine the Level 1 and Level 2 PHP APCs into one APC each for CMHCs and hospital-based providers, we reviewed the reasons why we structured the existing PHP APCs into a two-tiered payment distinguished by Level 1 and Level 2 services for both provider types in the CY 2009 OPPS/ASC final rule with comment period (73 FR 68688 through 68693), to determine whether the rationales continued to be applicable. In the CY 2009 OPPS/ASC final rule with comment period, we referenced the CY 2008 OPPS/ASC final rule with comment period (72 FR 66672), which noted that a significant portion of PHP service days actually provided fewer than 3 services to Medicare beneficiaries. In our CY 2009 OPPS/ASC final rule with comment period, we noted that PHP service days that provide exactly 3 services should only occur in limited circumstances. We were concerned about paying providers a single per diem payment rate when a significant portion of the PHP service days provided 3 services, and believed it was appropriate to pay a higher rate for more intensive service days.

We evaluated the frequency of claims reporting Level 1 and Level 2 PHP service days in Table 17 of the proposed rule to determine if a significant portion of PHP service days only provided exactly 3 services (81 FR 45671). Table 17 showed that the frequency of claims reporting PHP service days providing exactly 3 services (Level 1 services) has decreased greatly from 73 percent of CMHC service days in the CY 2009 rulemaking to 4 percent of CMHC service days in the CY 2017 proposed rule, and from 29 percent of hospital-based PHP service days in the CY 2009 rulemaking to 12 percent of hospital-based PHP service days in the CY 2017 proposed rule. We have updated this table, as shown below, to reflect updated CY 2015 claims data used for this final rule with comment period, and found that 5 percent of CMHC service days and 12 percent of hospital-based PHP service days have exactly 3 services provided. Level 1 PHP service days represent a small portion of PHP service days, particularly for CMHCs, as shown in Table 39 below. Based on this decline in the frequency of claims reporting Level 1 service days, we believe that the need for the PHP APC Level 1 and Level 2 payment tiers that was present in CY 2009 no longer exists.

The utilization data in Table 39 indicate that for the CY 2017 rulemaking year, the Level 2 CMHC service days and the hospital-based PHP Level 2 service days are 95 percent and 88 percent, respectively. Because Level 1 service days are now less common for both provider types, we believe it is no longer necessary to pay a separate rate when 4 or more services are provided compared to when only 3 services are provided. Our new PHP APCs 5853 and 5863 are based on cost data for 3 or more services per day (by provider type). Therefore, the combined cost data used to derive new PHP APCs 5853 and 5863 result in appropriate per diems based on costs for providing 3 or more services per day. We are sensitive to the fact that our payment policy may have influenced this change in service provision because providers were able to obtain higher payment for providing 4 or more services than for providing only 3 services. Therefore, as discussed earlier, we remain concerned that providers may inappropriately provide too few services to beneficiaries enrolled in PHPs, and we are working expeditiously to implement coding edits that will better monitor whether PHP providers are furnishing at least 20 hours of services per week, which eligible beneficiaries require.

Table 39 below reflects the utilization data used for this CY 2017 final rule with comment period, using the updated CY 2015 claims data.

TABLE 39—UTILIZATION OF PHP LEVEL 1 DAYS (PROVIDING EXACTLY 3 SERVICES PER DAY) AND PHP LEVEL 2 DAYS (PROVIDING 4 OR MORE SERVICES PER DAY), FROM CY 2007 THROUGH FINAL CY 2015 CLAIMS DATA

Rulemaking year	Claims year	CMHC Level 1 days (%)	CMHC Level 2 days (%)	Hospital-based PHP Level 1 days (%)	Hospital-based PHP Level 2 days (%)
CY 2009	CY 2007	73	27	29	71
CY 2010	CY 2008	66	34	25	75
CY 2011	CY 2009	2	98	18	82
CY 2012	CY 2010	2	98	19	81
CY 2013	CY 2011	3	97	11	89
CY 2014	CY 2012	4	96	11	89
CY 2015	CY 2013	6	94	11	89
CY 2016	CY 2014	5	95	11	89
CY 2017	CY 2015	5	95	12	88

When we implemented the PHP APCs Level 1 and Level 2 payment tiers in our CY 2009 rulemaking, we noted that we wanted to provide PHPs with flexibility in scheduling patients. Both the industry and CMS recognized that there may be limited circumstances when it is appropriate for PHPs to receive payment for days when exactly 3 units of service are provided (73 FR 68688 through 68689). Allowing PHPs to receive payment for a Level 1 service day where exactly 3 services are provided gives PHPs some flexibility in scheduling their patients. Our decision to replace the existing two-tiered PHP APCs with new PHP APCs 5853 and 5863 will provide payment for providing 3 or more services per day by CMHCs and hospital-based PHPs, respectively. Therefore, this flexibility in scheduling will remain.

Another primary reason for our decision to replace the Level 1 and Level 2 PHP APCs with a single PHP APC, by provider type, is the decrease in the number of PHPs, particularly CMHCs. With a small number of providers, data from large providers with a high percentage of all PHP service days and unusually high or low geometric mean costs per day will have a more pronounced effect on the PHP APCs geometric mean per diem costs, skewing the costs up or down. That effect would be magnified by continuing to split the geometric mean per diem costs further by distinguishing Level 1 and Level 2 PHP services. Creating a single PHP APC for each provider type providing 3 or more partial hospitalization services per day will reduce these cost fluctuations and provide more stability in the PHP APC geometric mean per diem costs.

We also note that our decision to replace the existing Level 1 and Level 2 PHP APCs, by provider type, with a single PHP APC for each provider type is permissible under the applicable statute and regulatory provisions. Section 1833(t)(2)(B) of the Act provides that the Secretary may establish groups of covered OPD services, within a classification system developed by the Secretary for covered OPD services, so that services classified within each group are comparable clinically and with respect to the use of resources. Moreover, the language that follows paragraph (t)(2) of section 1833 of the Act provides that, for purposes of subparagraph (B), items and services within a group shall not be treated as comparable with respect to use of resources if the highest mean cost for an item or service is more than two times greater than the lowest mean cost for an item or service within the group, with some exceptions. Section 419.31 of our regulations implements this statutory provision, providing that CMS classify outpatient services and procedures that are comparable clinically and in terms of resource use into APC groups. We believe our policy to replace the existing Level 1 and Level 2 PHP APCs for both provider types with a single PHP APC, by provider type, is supported by the statute and regulations and will continue to pay for partial hospitalization services appropriately based upon actual provider costs.

Both of the existing Level 1 and Level 2 PHP APCs are comprised of services described by the same HCPCS codes. Therefore, the types of services provided under the two payment tiers are the same. The difference is in the quantity of the services provided, where the Level 1 PHP APCs provide for payment for providing exactly 3 services per day, while the Level 2 PHP APCs provide for payment for providing 4 or more services per day. Because the difference in the Level 1 and the Level 2 PHP APCs is in the quantity of the services provided, we expect that the resource use (that is, the geometric mean per diem cost) for providing partial hospitalization services under Level 1 will represent approximately 75 percent or less of the resource use for providing partial hospitalization services under Level 2, by provider type. Table 18 of the proposed rule showed a clear trend for hospital-based PHPs, where the geometric mean per diem costs for providing Level 1 partial hospitalization services have approached the geometric mean per

diem costs for providing Level 2 partial hospitalization services, until they exceed the geometric mean per diem costs for providing Level 2 partial hospitalization services beginning in CY 2016. As the percentages in Table 18 of the proposed rule approach 100 percent, the Level 1 and the Level 2 PHP APC geometric mean per diem costs become closer to each other, demonstrating similar resource use. The trend is less clear for CMHCs, but the data still show the cost difference between the two tiers narrowing, except in CY 2016. We are not sure why the cost difference is wider among CMHCs in CY 2016. In the CY 2017 OPPS/ASC proposed rule, we welcomed public comments that could help explain the difference. However, we did not receive any public comments on this issue.

The data trends reflected in Table 40 below, which is an update of Table 18 in the proposed rule based on final CY 2015 claims data for this final rule with comment period, continue to support the proposals we made, and our decision to change from a two-tiered APC system for CMHCs and for hospital-based PHPs to a combined APC for providing 3 or more services per day for each provider type.

TABLE 40—TRENDS IN LEVEL 1 PER DIEM COSTS AS A PERCENTAGE OF LEVEL 2 PER DIEM COSTS

	CY 2013 (%)	CY 2014 (%)	CY 2015 (%)	CY 2016 (%)	CY 2017* (%)
CMHCs; Level 1 PHP APC per diem costs/Level 2 PHP APC per diem costs	77.5	88.6	84.4	66.1	94.4
Hospital-based PHPs; Level 1 PHP APC per diem costs/Level 2 PHP APC per diem costs	79.2	89.0	91.6	* 110.0	** 133.7

* Based on CY 2015 final claims data.
** Cost inversions occurred with the Level 1 PHP APC per diem costs exceeding the Level 2 PHP APC per diem costs.

We evaluated the provision of more costly individual therapy in our CY 2017 analyses to determine if there were differences in its provision for PHP APC Level 1 service days compared to PHP APC Level 2 service days, by provider type, because this could affect our expected difference in resource use (that is, geometric mean per diem costs) between the two payment tiers. Using the updated CY 2015 claims data for this final rule with comment period, we found that individual therapy was provided less frequently on days where exactly 3 services were provided by hospital-based PHPs (in 4.0 percent of PHP APC Level 1 service days and in 6.2 percent of PHP APC Level 2 service days). However, we found that individual therapy was provided more frequently under the Level 1 CMHC service days than under the Level 2 CMHC service days (7.9 percent versus 4.4 percent). The greater frequency of CMHCs' providing more costly individual therapy under Level 1 PHP service days should increase resource use for these service days, narrowing the cost difference between Level 1 and Level 2 CMHC service days. This result reflects the updated claims data used for this final rule with comment period.

As we described earlier, the services provided under the Level 1 and Level 2 PHP APC payment tiers are comparable clinically and in terms of resource use. Therefore, based on the authority provided under section 1833(t)(2)(B) of the Act and our regulations at § 419.31(a)(1), and to mitigate the policy concerns noted above, as we proposed, we are replacing the Level 1 and Level 2 PHP APCs, for each provider type, with a single PHP APC by provider type for CY 2017 and subsequent years.

Our decision to replace the existing Level 1 and Level 2 PHP APCs for both provider types with a single PHP APC, by provider type, is designed to continue to pay for partial hospitalization services appropriately based upon actual provider costs. We believe that section 1833(t)(2)(B) of the Act and our regulations at § 419.31(a)(1) provide the Secretary with the authority to classify services that are comparable clinically and in terms of resource use under a single APC grouping, which is the basis for our decision to replace the existing Level 1 and Level 2 PHP APCs for CMHCs and hospital-based PHPs for providing partial hospitalization services with a single PHP APC for each specific provider type. In addition, we believe that our decision to combine the PHP APCs two-tiered payment structure by provider type will more appropriately pay providers for partial hospitalization services provided to Medicare beneficiaries and avoid cost inversions in the future. Our decision to combine the PHP APC payment tiers, by provider type, also will provide more predictable geometric mean per diem costs, particularly given the small number of CMHCs and the cost inversions that hospital-based PHPs have experienced. The cost inversions between PHP APC Level 1 and Level 2 service days in the hospital-based PHP claims data and the small number of CMHCs are the two primary reasons for our policy to replace the two-tiered PHP APCs with a single PHP APC for each provider type. The small percentage of all PHP service days for partial hospitalization services provided under the Level 1 PHP APCs further supports our policy to replace the two-tiered PHP APCs with a single PHP APC for each provider type. As noted previously, we believe that the need for the PHP APC Level 1 and Level 2 payment tiers that was present in CY 2009 no longer exists.

In summary, we are creating new CMHC APC 5853 to pay CMHCs for partial hospitalization services provided to Medicare beneficiaries for providing 3 or more services per PHP service day to replace existing CMHC APCs 5851 and 5852 for CY 2017 and subsequent years. We also are creating new hospital-based PHP APC 5863 to pay hospital-based PHPs for partial hospitalization services provided to Medicare beneficiaries for providing 3 or more services per PHP service day to replace existing hospital-based PHP APCs 5861 and 5862 for CY 2017 and subsequent years. We discuss the final geometric mean per diem cost for new CMHC APC 5853 and the final geometric mean per diem cost for new hospital-based PHP APC 5863 in section VIII.B.2. of this final rule with comment period.

By finalizing these proposals, we will pay both CMHCs and hospital-based PHP providers the same payment rate for providing 3 partial hospitalization services in a single service day as is paid for providing 4 or more services in a single service day, by the specific provider type. We remind providers that because partial hospitalization services are intensive outpatient services, our regulations at §§ 410.43(a)(3) and (c)(1) require that PHP beneficiaries need at least 20 hours of services each week and that PHPs furnish services in accordance with the plan of care

reflecting that need. We reiterate that this 20 hour per week requirement is a minimum requirement, and have noted in multiple prior OPPS/ASC final rules with comment periods that a typical PHP would include 5 to 6 hours per day (70 FR 68548, 71 FR 67999, 72 FR 66671, and 73 FR 68687). We want providers to continue to have flexibility in providing PHP services, and we will continue to monitor the utilization of providing 3 services per service day for those limited circumstances when a 3-service day is appropriate. We are considering multiple options for enhancing monitoring of providers to ensure that they furnish appropriate services under PHPs which, according to our regulations at § 410.43(c), are intended for patients who require a minimum of 20 hours per week of therapeutic services as evidenced in their plan of care, and which, according to our regulations at § 424.24(e), require that the services be furnished in accordance with a plan of care that sets forth the frequency and duration of the services, taking into account a reasonable expectation of improvement in the patient's condition. We will communicate how we intend to undertake such enhanced monitoring in subregulatory guidance within the next year.

Finally, we are concerned about the low frequency of providing individual therapy, which we noted earlier in this section, and we will be monitoring its provision. The PHP is intensive by nature, and PHP services are provided in lieu of inpatient hospitalization. Furthermore, section 1861(ff) of the Act describes the items and services to be included in a PHP, including individual and group therapy. Therefore, we believe that appropriate treatment for PHP patients includes individual therapy. We encourage providers to examine their provision of individual therapy to PHP patients to ensure that patients are receiving all of the services that they may need.

Comment: One commenter believed that the combined PHP APCs do not appear to have included all of the data from the original Level 1 and Level 2 PHP APCs, and would result in a payment reduction because of implementation of the new policy.

Response: As described earlier, the combined PHP APCs' geometric mean costs used available CY 2015 claims data and were calculated by following the existing methodology for ratesetting, except that the geometric mean per diem costs for each provider type were calculated for days providing 3 or more partial hospitalization services, rather than calculated separately for days with exactly 3 services, and for days with 4 or more services. The combined PHP APCs' geometric mean costs are similar to a weighted average of actual provider costs. Therefore, the total payments resulting from the combined PHP APC geometric mean per diem cost, by provider type, would be roughly equal to the total payments resulting from the two-tiered PHP APC per diem costs, by provider type. As such, combining the PHP APCs geometric mean per diem costs does not reduce total costs or total payments by provider type. We refer readers to section VIII.B.2. for more detailed specifics on the CY 2017 PHP geometric mean per diem cost calculations.

Comment: A few commenters stated that the current two-tiered payment structure fostered a continuum of care, and contended that CMS' current policy of distinguishing 3 services per day and 4 or more services per day offers the flexibility of intermediate levels of care between outpatient, office-based visits, and inpatient psychiatric care, and further are differentiated from each other by the provider community as ''Intensive Outpatient Programs'' (IOPs) and PHPs, respectively. The commenters believed that, consequently, replacing the two-tiered payment methodology with a single APC and calculating the geometric mean per diem costs for 3 or more services per day would not recognize the importance and need for the continuum of care.

Response: We are concerned about the potential misuse of the PHP benefit. A few commenters indicated that some in the provider community recognize an IOP level of care. However, there is no Medicare benefit category for IOPs. Therefore, we cannot recognize or pay for what providers term ''IOPs'' using the PHP benefit. If the individual services that make up these IOPs meet all applicable requirements for non-PHP outpatient services, including coding definitions, and are reasonable and necessary, then conceivably these services could be billed individually under the OPPS. IOPs are typically not only less intensive than PHPs, but, as previously noted, are also a nonexistent Medicare category. In equating IOPs with the statutorily mandated PHP benefit, we believe commenters misunderstood the purpose of the PHP benefit. Specifically, a PHP requires physician certification that the individual would need inpatient psychiatric care if the partial hospitalization services were not provided, as described in § 424.24(e) of the regulations. Furthermore, as required by section 1861(ff) of the Act and by § 424.24(e) of the regulations, a PHP must be prescribed by a physician, and the services provided under the physician's care must be certified and recertified as being reasonable and necessary and under a plan of treatment that sets forth the duration and frequency of services, taking into account a reasonable expectation of improvement in the patient's condition. If a beneficiary is certified for PHP but provided services that meet some lesser level of care, this action could be some indication of fraud. We plan to work with the MACs in order to better educate providers on PHP requirements.

Finally, combining the PHP APCs does not affect the continuum of care available to Medicare beneficiaries seeking treatment for mental health issues. Our decision to combine the PHP APCs for Level 1 and Level 2 services into a single APC for 3 or more services per day, by provider type, is simply a change in how we pay for PHP services, and does not affect access to mental health care or the ways that non-PHP patients may receive mental health services.

Comment: One commenter stated that the requirement for a minimum of 20 hours per week of therapeutic services conflicts with accepted treatment parameters and other managed care options, where attendance and minimum hours are not required. The commenter believed that the 20 hour per week minimum imposes a burden on older patients, is not necessary to receive a positive outcome, provides no flexibility, would result in a patient attending the program 5 days a week and, therefore, creates a barrier to providing the most appropriate treatment for a patient's needs.

Response: When Congress established the PHP benefit in statute, it described a PHP as an *intensive* program that is provided *in lieu of inpatient treatment* (we refer readers to sections 1835(a)(2)(F), 1861(ff)(2), and 1861(ff)(3)(A) of the Act). Congress provided discretion to the Secretary to determine the frequency of PHP services. In our CY 2009 rulemaking, we promulgated regulations to establish an eligibility requirement at 42 CFR 410.43(c)(1), which states that PHPs are intended for patients who require a minimum of 20 hours per week of therapeutic services as evidenced in their plan of care. Under § 410.43(a)(3), we also require PHP services to be furnished in accordance with the plan of care and a physician certification.

Because a PHP is intended for patients who would otherwise be in an inpatient psychiatric setting, and who require an intensive level of services of at least 20 hours per week, it is not an

appropriate program for patients who need less intensive mental health services. Medicare provides a number of ways in which patients can receive covered mental health services, which range from inpatient psychiatric care, to PHPs, to other outpatient care provided by physicians or other health professionals in a variety of settings. Our Medicare Benefit Policy Manual (IOM 100–02, Chapter 6) states that PHP patients must be able to cognitively and emotionally participate in the active treatment process, and to tolerate the intensity of a PHP program (we refer readers to section 70.3, Chapter 6 of IOM 100–02, which is available via the Internet on the CMS Web site at: *https://www.cms.gov/Regulations-and-Guidance/Guidance/Manuals/Downloads/bp102c06.pdf*). It is possible that mental health treatment provided outside of the PHP benefit may be a more appropriate venue for some patients for whom the 20 hour per week minimum requirement is deemed to be burdensome.

We are concerned that some PHPs are admitting patients who do not meet the eligibility requirements required by the statute. Many of these PHPs are not providing at least 20 hours per week of services to their patients. As such, in March 2016, we issued a MedLearn Special Edition article to notify PHPs of edits to the claims processing system, which would begin July 1, 2016, and would systematically enforce our existing regulations related to the 20-hour per week minimum requirement. However, in early July 2016, we inactivated the edits, effective July 1, 2016, so that we could consider adding more flexibility to the editing process. (We refer readers to MedLearn Matters SE1607, which is available via the Internet on the CMS Web site at: *https://www.cms.gov/Outreach-and-Education/Medicare-Learning-Network-MLN/MLNMattersArticles/Downloads/SE1607.pdf*.)

In addition, we are considering proposing clarifications to our regulations in our CY 2018 rulemaking to more strongly tie a beneficiary's receipt of at least 20 hours per week of partial hospitalization services under a PHP to payment for those services. We are informing hospital-based PHPs and CMHCs so that they can review their admission procedures, and ensure that the patients they serve are truly eligible for the PHP benefit. In this final rule with comment period, we are requesting public comments on the advantages, disadvantages, and potential challenges of strengthening the tie between payment and furnishing at least 20 hours of services per week to eligible beneficiaries, for consideration in our development of the CY 2018 rulemaking. Individuals should submit their comments as indicated under the **DATES** section of this final rule with comment period. Finally, as noted previously in this section, we will monitor PHP claims, beginning in January 2017, to determine whether PHP beneficiaries are receiving at least 20 hours per week of partial hospitalization services.

PHP services can be extremely beneficial to eligible patients and, at the same time, can provide a more cost-effective method for providing care outside of an inpatient setting. We are working to protect vulnerable beneficiaries with mental health conditions by helping to ensure that eligible beneficiaries receive the level of care that is appropriate to the PHP setting.

c. Alternatives Considered

As we discussed in the CY 2017 OPPS/ASC proposed rule (81 FR 45672 through 45673), we considered several alternatives to replacing the Level 1 and Level 2 PHP APCs with a single new APC for each PHP provider type. We investigated whether we could maintain the Level 1 and Level 2 PHP APCs if the PHP APC per diem costs were based upon unit costs. However, the same data issues that affected per diem costs also affected unit costs. The hospital-based unit cost data also were inverted such that a Level 1 service day would be more costly than a Level 2 service day. As we have previously noted, we do not believe that it is appropriate to pay more for providing Level 1 services than for providing Level 2 services because only 3 services are provided during Level 1 service days and 4 or more services are provided during Level 2 service days.

We also considered continuing the two-tiered PHP APC payment structure by provider type, and addressing future cost inversions as they arise. Under this alternative, we could have proposed to use a default methodology for handling cost inversions by only combining the two-tiered PHP APC structure for the provider type with inverted data, and only for the affected calendar year. However, we believe that it could be confusing if one provider type was paid for PHP services based on a two-tiered payment structure, while the other provider type was paid based on a single APC grouping. We also believe that providers would prefer the predictability of knowing whether they would be paid using a single PHP APC or using two-tiered PHP APCs for Level 1 and Level 2 services.

Another alternative for handling cost inversions could be to apply an equitable adjustment. However, the level of adjustment required would vary depending on the degree of the inversion, which also could fluctuate from year to year. Again, we believe, and providers and their representative associations have informed us, that providers would prefer the predictability afforded by avoiding cost inversions altogether, rather than being subject to an *ad hoc* adjustment as cost inversions arise.

We considered whether we should adjust our data trims, but we determined that the cause of the cost inversion was not due to providers with aberrantly high CCRs or costs per day. Rather, we believe that the cause of the cost inversion was largely the influence of high volume providers with high (but not inappropriately high) Level 1 service day costs and low (but not inappropriately low) Level 2 service day costs in the CY 2015 hospital-based PHP claims data used for the CY 2017 rulemaking. This suggested that adjusting data trims may not be an effective method for resolving the inversion. Nevertheless, we reconsidered our analysis of the preliminary CY 2015 claims data for hospital-based PHPs by testing a stricter trim on hospital-based PHP data using the published upper limit CCR that hospitals use for calculating outliers rather than the existing CCR>5 trim. This test of a stricter CCR trim did not remove the inversion, and as a result, we did not propose to change the existing CCR>5 trim on hospital-based PHP service days for our CY 2017 ratesetting.

Comment: One commenter recommended that CMS maintain the two-tiered system, but combine the APCs for CMHCs and hospital-based PHPs. The commenter noted that CMHCs and hospital-based PHPs provide the exact same services, but are paid differently, although the commenter acknowledged that hospital-based PHPs have higher costs, largely due to overhead allocation. The commenter believed that the APCs distinguished by provider type ''punish'' rather than reward CMHCs for being more cost-effective than hospital-based PHPs. The commenter believed that freestanding CMHCs should not be paid less than hospital-based PHPs, and noted that, in 2015, MedPAC recommended that Congress decrease or eliminate the payment differences between hospital outpatient departments and physician offices. The commenter stated that setting CMHCs' payment rates based on the small

number of remaining CMHCs does not reflect the actual cost of providing these services.

Response: The OPPS system pays for outpatient services, including partial hospitalization services. This system bases payment on the geometric mean per diem costs of providing services using provider data from claims and cost reports. We calculate the PHP APC geometric mean per diem costs based on the data provided for each type of provider to determine payment for these services. We believe that this system provides appropriate payment for partial hospitalization services based on actual provider costs. The final PHP APC geometric mean per diem costs for CY 2017 reflect the costs of what providers expend to maintain such programs, as reported on their claims and cost reports.

We believe the commenter has misunderstood MedPAC's recommendation in its March 2015 Report to Congress. MedPAC recommended that payment rates be adjusted for more costly hospital outpatient departments so that they more closely align with those of less costly freestanding physician offices providing the same services (Medicare Payment Advisory Commission Report to the Congress: Medicare Payment Policy, Chapter 3, ''Hospital Inpatient and Outpatient Services,'' page 51, March 2015). Congress has since addressed a portion of this recommendation in section 603 of the Bipartisan Budget Act of 2015. We refer readers to section X.A. of this final rule with comment period for a full discussion of the provisions of section 603. The provisions of section 603 do not apply to CMHCs because CMHCs are not a department of a hospital. The difference in payment between CMHCs and hospital-based PHPs is based upon differences in resource use (or costs). When Congress required the Secretary to implement an outpatient prospective payment system, it required that this payment system group clinically similar covered services with respect to resource use (section 1833(t)(2) of the Act). Because CMHCs and hospital-based PHPs resource uses are different, these two provider types are paid under different APCs, based on their actual resource use.

Because the cost of providing partial hospitalization services differs significantly by site of service, we established different PHP payment rates for hospital-based PHPs and CMHCs in the CY 2011 OPPS/ASC final rule with comment period (75 FR 71991 through 71994). However, we allowed a 2-year transition to CMHC payment rates based solely on CMHC data. With respect to the continued use of PHP APC geometric mean per diem costs for determining payment rates by provider type (rather than median costs, which commenters mistakenly referenced), we refer readers to the CY 2013 OPPS/ASC final rule with comment period (77 FR 68406 through 68412) for a discussion of the implementation of this policy. The resulting payment rates reflect the geometric mean cost of what providers expend to maintain such programs, based on data provided by CMHCs and hospital-based PHPs, which we believe is an improvement over the two-tiered methodology calculated based on median costs using only hospital-based data.

Comment: One commenter suggested that CMS consider paying PHPs using a quality-based payment system, and that CMS use value-based purchasing.

Response: We responded to a similar public comment in the CY 2016 OPPS/ASC final rule with comment period (80 FR 70462) and refer readers to a summary of that comment and our response. To reiterate, sections 1833(t)(2) and 1833(t)(9) of the Act set forth the requirements for establishing and adjusting OPPS payment rates, which include PHP payment rates. Section 1833(t)(17) of the Act authorizes the Hospital OQR Program, which applies a payment reduction to subsection (d) hospitals that fail to meet program requirements. In the CY 2015 OPPS/ASC proposed rule (79 FR 41040), we considered future inclusion of, and requested comments on, the following quality measures addressing PHP issues that would apply in the hospital outpatient setting: (1) 30-day Readmission; (2) Group Therapy; and (3) No Individual Therapy. We also refer readers to the CY 2015 OPPS/ASC final rule with comment period (79 FR 66957 through 66958) for a more detailed discussion of PHP measures considered for inclusion in the Hospital OQR Program in future years. The Hospital OQR Program does not apply to CMHCs. Further, currently, there is no statutory language explicitly authorizing a value-based purchasing program for PHPs.

2. Development of the PHP APC Geometric Mean Per Diem Costs and Payment Rates

In the CY 2017 OPPS/ASC proposed rule (81 FR 45667 through 45678), for CY 2017 and subsequent years, we proposed to follow the detailed PHP ratesetting methodology described in section VIII.B.2. of the CY 2016 OPPS/ASC final rule with comment period (80 FR 70462 through 70466) to determine the PHP APCs' geometric mean per diem costs and to calculate the payment rates for the new single hospital-based PHP APC and CMHC APC. However, as discussed in section VIII.B.1. of this CY 2017 final rule with comment period, in support of our CY 2017 policies to establish single PHP APCs for hospital-based PHPs and CMHCs, we also are combining the geometric mean per diem costs for the two existing hospital-based PHP APCs to calculate a geometric mean per diem cost for new hospital-based PHP APC 5863. Currently, hospital-based PHP service days with exactly 3 service units (based on allowable PHP HCPCS codes) are assigned to Level 1 PHP APC 5861, and hospital-based PHP service days with 4 or more service units (based on allowable PHP HCPCS codes) are assigned to Level 2 PHP APC 5862. Under our CY 2017 proposal, instead of separating the service days between these two APCs, we proposed to combine the service days so that hospital-based PHP service days that provide 3 or more service units per day (based on allowable PHP HCPCS codes) are assigned to new hospital-based PHP APC 5863. We then proposed to continue to follow the existing methodology described in section VIII.B.2.e. of the CY 2016 OPPS/ASC final rule with comment period (80 FR 70465 through 70466) to its end to calculate the geometric mean per diem cost for new hospital-based PHP APC 5863. Therefore, the geometric mean per diem cost for new hospital-based PHP APC 5863 would be based upon actual hospital-based PHP claims and costs for PHP service days providing 3 or more services.

Similarly, we proposed to combine the geometric mean per diem costs for the two existing CMHC APCs to calculate a geometric mean per diem cost for new CMHC APC 5853. Currently, CMHC service days with exactly 3 service units (based on allowable PHP HCPCS codes) are assigned to Level 1 CMHC APC 5851, and CMHC service days with 4 or more service units (based on allowable PHP HCPCS codes) are assigned to Level 2 CMHC APC 5852. Under our CY 2017 proposal, instead of separating the service days between these two APCs, we proposed to combine the service days so that CMHC service days that provide 3 or more service units (based on allowable PHP HCPCS codes) are assigned to proposed new CMHC APC 5853. We then proposed to continue to follow the existing PHP ratesetting methodology described in section VIII.B.2.e. of the CY 2016 OPPS/ASC final rule with comment period (80 FR 70465 through 70466) to its end to

calculate the geometric mean per diem cost for new CMHC APC 5853. Therefore, the geometric mean per diem cost for new CMHC APC 5853 would be based upon actual CMHC claims and costs for CMHC service days providing 3 or more services.

To prevent confusion, we referred to the per diem costs listed in Table 19 of the proposed rule as the proposed CMHC or hospital-based PHP APC per diem costs or the proposed CMHC or hospital-based PHP APC geometric mean per diem costs. We referred to the CMHC or hospital-based PHP per diem payment rates listed in Addendum A to the proposed rule (which is available via the Internet on the CMS Web site) as the proposed CMHC or hospital-based PHP APC per diem payment rates or the proposed CMHC or hospital-based PHP APC geometric mean per diem payment rates. The CMHC or hospital-based PHP APC per diem costs are the provider-specific costs derived from the most recent claims and cost data. The CMHC or hospital-based PHP APC per diem payment rates are the national unadjusted payment rates calculated from the CMHC or hospital-based PHP APC per diem costs, after applying the OPPS budget neutrality adjustments described in section II.A.4. of this final rule with comment period.

We proposed to apply our established methodologies in developing the geometric mean per diem costs and payment rates under this proposal, including the application of a ±2 standard deviation trim on costs per day for CMHCs and a CCR>5 hospital service day trim for hospital-based PHP providers. These two trims were finalized in our CY 2016 OPPS/ASC final rule with comment period (80 FR 70455 through 70462) for CY 2016 and subsequent years.

a. CMHC Data Preparation: Data Trims, Exclusions, and CCR Adjustments

For the proposed rule, prior to calculating the proposed geometric mean per diem cost for new CMHC APC 5853, we prepared the data by first applying trims and data exclusions, and assessing CCRs as described in the CY 2016 OPPS/ASC final rule with comment period (80 FR 70463 through 70465), so that ratesetting is not skewed by providers with extreme data. Under the ±2 standard deviation trim policy, we excluded any data from a CMHC for ratesetting purposes when the CMHC's geometric mean cost per day is more than ±2 standard deviations from the geometric mean cost per day for all CMHCs. By applying this trim for CY 2017 ratesetting, in the proposed rule, three CMHCs with geometric mean per diem costs per day below the trim's lower limit of $42.83 were excluded from the proposed ratesetting for CY 2017 (81 FR 45674). We also applied the OPPS ±3 standard deviation trim on CCRs to exclude any data from CMHCs with CCRs above or below this range. This trim resulted in the exclusion of one CMHC with a very low CCR of 0.001. Both of these standard deviation trims removed four providers from ratesetting whose data would have skewed the calculated proposed geometric mean per diem cost downward.

In accordance with our PHP ratesetting methodology, in the proposed rule, we also removed service days with no wage index values because we use the wage index data to remove the effects of geographic variation in costs prior to APC geometric mean per diem cost calculation (80 FR 70465). In our CY 2017 proposed rule ratesetting, one CMHC was excluded because it was missing wage index data for all of its service days.

In addition to our trims and data exclusions, before determining the PHP APC geometric mean per diem costs, we also assess CCRs (80 FR 70463). Our longstanding PHP OPPS ratesetting methodology defaults any CMHC CCR>1 to the statewide hospital ancillary CCR (80 FR 70457). In our CY 2017 proposed rule ratesetting, we identified one CMHC that had a CCR>1. This CMHC's CCR was 1.185 and was defaulted to its appropriate statewide hospital ancillary CCR for CY 2017 ratesetting purposes.

These data preparation steps adjusted the CCR for 1 CMHC and excluded 5 CMHCs, resulting in the inclusion of a total of 46 CMHCs in our CY 2017 proposed rule ratesetting modeling, and the removal of 643 CMHC claims from the 17,033 total CMHC claims used. We believe that excluding providers with extremely low geometric mean costs per day or extremely low CCRs protects CMHCs from having that data inappropriately skew the calculation of the CMHC APC geometric mean per diem cost. Moreover, we believe that these trims, exclusions, and adjustments help prevent inappropriate fluctuations in the PHP APC geometric mean per diem payment rates.

For the CMHC final rule results, we used updated CY 2015 final claims data. The final CY 2015 Outpatient Standard Analytic File used for CY 2017 ratesetting showed that 52 CMHCs had claims in CY 2015. As described in the discussion of the PHP ratesetting process in the CY 2016 final rule (80 FR 70462 through 70467), in section II.A. of this final rule with comment period, and in the OPPS Claims Accounting Document under supporting documentation ''Downloads'' for the CY 2017 OPPS/ASC final rule with comment period (available online at *https://www.cms.gov/Medicare/Medicare-Fee-for-Service-Payment/HospitalOutpatientPPS/Hospital-Outpatient-Regulations-and-Notices.html*), in developing the claims eligible for ratesetting we excluded CMHCs with outlier overall CCRs (1 CMHC). After making this exclusion, our updated CY 2015 claims data showed 51 CMHCs with claims that were eligible for ratesetting. We then applied our ratesetting trims and exclusions. Our ±2 standard deviation trim policy excluded 3 CMHCs with geometric mean per diem costs per day below the trim's lower limit of $39.77, and 1 CMHC with geometric mean per diem costs per day above the trim's upper limit of $403.50. This ±2 standard deviation trim removed 4 CMHCs from our final rule ratesetting whose data would have skewed the calculation of the final geometric mean per diem cost. For this final rule with comment period, we also applied the OPPS ±3 standard deviation trim on CCRs to exclude any data from CMHCs with CCRs above or below this range, but no CMHCs were excluded as a result.

In accordance with our PHP ratesetting methodology, we also removed service days with no wage index values because we use the wage index data to remove the effects of geographic variation in costs prior to APC geometric mean per diem cost calculation (80 FR 70465). In this CY 2017 final rule ratesetting, 2 CMHCs were excluded because they were missing wage index data for all of their service days.

In addition to our trims and data exclusions, before determining the PHP APC geometric mean per diem costs, we also assess CCRs (80 FR 70463 through 70464). Our longstanding PHP OPPS ratesetting methodology defaults any CMHC CCR>1 to the statewide hospital ancillary CCR (80 FR 70457). In this CY 2017 final rule ratesetting, we identified 1 CMHC that had a CCR>1. This CMHC's CCR was 1.185 and was defaulted to its appropriate statewide hospital ancillary CCR for CY 2017 final rule ratesetting purposes.

These data preparation steps adjusted the CCR for 1 CMHC and excluded 6 CMHCs, resulting in the inclusion of a total of 45 CMHCs in our CY 2017 final rule ratesetting modeling, and the removal of 2,395 CMHC claims from the 18,990 total CMHC claims used.

After applying all of the above trims, exclusions, or adjustments, the geometric mean per diem cost for all

CMHCs for providing 3 or more services per day (new CMHC APC 5853) is $124.92 (compared to the proposed $135.30).

b. Hospital-Based PHP Data Preparation: Data Trims and Exclusions

For the CY 2017 proposed rule, we followed a data preparation process for hospital-based PHP providers that is similar to that used for CMHCs by applying trims and data exclusions as described in the CY 2016 OPPS/ASC final rule with comment period (80 FR 70463 through 70465) so that our ratesetting is not skewed by providers with extreme data. Before any trimming or exclusions, in the proposed rule there were 404 hospital-based PHP providers in the claims data. For hospital-based PHP providers, we applied a trim on hospital service days when the CCR was greater than 5 at the cost center level. The CCR>5 hospital service day trim removed hospital-based PHP service days that use a CCR>5 to calculate costs for at least one of their component services. Unlike the ±2 standard deviation trim, which excluded CMHC providers that failed the trim, the CCR>5 trim excluded any hospital-based PHP service day where any of the services provided on that day are associated with a CCR>5. Applying this trim removed service days from 8 hospital-based PHP providers with CCRs ranging from 5.8763 to 19.9996 from our proposed rule ratesetting. However, all of the service days for these eight hospital-based PHP providers had at least one service associated with a CCR>5, so the trim removed these providers entirely from our proposed rule ratesetting. In addition, the OPPS ±3 standard deviation trim on costs per day removed four providers from proposed rule ratesetting.

Finally, in our proposed rule ratesetting, we excluded 13 hospital-based PHP providers that reported zero daily costs on their claims, in accordance with our proposed rule PHP ratesetting policy (80 FR 70465). Therefore, we excluded a total of 25 hospital-based PHP providers, resulting in 379 hospital-based PHP providers in the data used for proposed rule ratesetting. After completing these data preparation steps, we calculated the geometric mean per diem cost for proposed new hospital-based PHP APC 5863 for hospital-based PHP services. The proposed geometric mean per diem cost for hospital-based PHP providers that provide 3 or more services per service day (new hospital-based PHP APC 5863) was $192.57.

The proposed CY 2017 PHP APC geometric mean per diem costs for the new CMHC and hospital-based PHP APCs were shown in Table 19 of the proposed rule (81 FR 45674). The proposed PHP APC payment rates were included in Addendum A to the proposed rule (which is available via the Internet on the CMS Web site).

For this final rule with comment period, for hospital-based PHPs, we used updated CY 2015 final claims data. The final CY 2015 Outpatient Standard Analytic File showed that 482 hospital-based PHPs had claims in CY 2015. As described in the discussion of the PHP ratesetting process in the CY 2016 final rule with comment period (80 FR 70462 through 70467), in section II.A. of this final rule with comment period, and in the OPPS Claims Accounting Document under supporting documentation ''Downloads'' for the CY 2017 OPPS/ASC final rule with comment period (available online at *https://www.cms.gov/Medicare/Medicare-Fee-for-Service-Payment/HospitalOutpatientPPS/Hospital-Outpatient-Regulations-and-Notices.html*), in developing the claims eligible for ratesetting, we excluded providers paid outside of the OPPS (39 hospital-based PHPs), providers without cost report data (9 hospital-based PHPs), and providers with outlier overall CCRs (14 hospital-based PHPs). After making those exclusions, the updated CY 2015 claims data for this final rule with comment period showed 420 hospital-based PHP providers that were eligible for ratesetting. We then applied our ratesetting trims and exclusions.

For hospital-based PHP providers, for this final rule with comment period, we applied a trim on hospital service days when the CCR was greater than 5 at the cost center level. Applying this trim removed service days from 8 hospital-based PHP providers with CCRs ranging from 5.411 to 17.603. However, all of the service days for these 8 hospital-based PHP providers had at least one service associated with a CCR>5, so the trim removed these providers entirely from ratesetting. Also, the OPPS ±3 standard deviation trim on costs per day removed 1 provider with costs per day over $4,000 from this final rule ratesetting.

For this final rule with comment period, we also excluded 15 hospital-based PHP providers that reported zero daily costs on all of their claims, in accordance with our PHP ratesetting policy (80 FR 70465). Finally, we excluded 1 hospital-based PHP without valid wage index data. Therefore, we excluded a total of 25 hospital-based PHP providers, resulting in 395 hospital-based PHP providers in the data used for ratesetting. After completing these data preparation steps, we calculated the geometric mean per diem cost for new hospital-based PHP APC 5863 for hospital-based PHP services. The final geometric mean per diem cost for hospital-based PHP providers that provide 3 or more services per service day (new hospital-based PHP APC 5863) is $213.14 (compared to the proposed $192.57).

Currently, the highest hospital-based PHP per diem rate, which for CY 2016 was the Level 2 hospital-based PHP per diem rate for APC 5862, serves as the cap for all non-PHP outpatient mental health services provided in a single service day. Because we are finalizing our proposal to replace the existing two-tiered PHP APCs structure with a single APC grouping for these services by specific provider type, the outpatient mental health treatment cap for CY 2017 is the geometric mean per diem rate for new hospital-based PHP APC 5863.

In the CY 2017 OPPS/ASC proposed rule, we solicited comments on our proposals related to CMHCs and hospital-based PHP APC geometric mean per diem cost calculations and data exclusions.

Comment: Several commenters expressed concern that the proposed CY 2017 PHP APC geometric mean per diem costs and payment rates were lower than the current CY 2016 PHP APC geometric mean per diem costs and payment rates, and stated that the proposed payment rates would not provide adequate payment of these services.

Several commenters suggested an alternative payment methodology. Some commenters suggested that CMS delay implementation of the CY 2017 PHP APC per diem payment rates until it can capture and adequately cover hospital-based PHP costs, or that CMS ''freeze'' the CY 2017 PHP APC per diem payment rates at the CY 2016 level. Several commenters recommended that CMS use a median cost phase-in of at least 3 years to allow PHP providers to assess their programs and make necessary changes, using a rolling average of the per diem costs. One commenter stated that this method could minimize the major fluctuations in the payment rates from year to year and provide a more stable basis for hospitals and CMHCs when budgeting and planning. Another commenter stated that the decrease in the PHP APC payment rate would discourage hospitals from offering the PHP benefit to Medicare beneficiaries, ultimately creating a barrier to access to these services, which could place the

population at risk. Some commenters stated that the payment rate reduction would impair services and affect the provider network of both service organization types, or that the lower payment rates will force providers to restructure their organization and programs. Other commenters stated that a payment reduction will force providers to cut costs, staff and programming, which would cause them to assist fewer people, and would lead to higher ED visits. Another commenter stated that providers would be unable to absorb the impact of the reduction. Some commenters noted that PHP costs had increased due to rising wages, the new CMHC conditions of participation (CoPs), and a reduction in bad debt reimbursement.

One commenter mentioned that since last year, another 11 CMHCs closed or discontinued PHP services, and the policy would further decrease valuable resources for the mentally ill. Several commenters believed that PHPs will continue to decrease in numbers without adequate payment. One commenter stated that establishing payment rates that are lower than geometric mean costs is a disincentive for PHPs to continue providing services. Another commenter stated that the 13 percent reduction in hospital-based PHP geometric mean per diem payment rates may prohibit high quality providers from continuing to provide PHP services and exacerbate existing access constraints. A number of commenters noted that PHPs are a vital part of the mental health care continuum, and noted the benefits of the program, which include providing needed care to a vulnerable population, avoiding more costly and less efficient emergency department visits and more costly inpatient stays, and increasing the time between readmission.

Response: We appreciate the commenters' input regarding the CY 2017 proposed PHP APC payment rates. The final hospital-based PHP APC geometric mean per diem cost for new APC 5863 is higher than the proposed hospital-based PHP per diem cost ($213.14 for this final rule versus $192.57 in the proposed rule). However, the final CMHC geometric mean per diem cost for new APC 5853 is lower than the proposed CMHC geometric mean per diem costs ($124.92 for this final rule versus $135.30 in the proposed rule). As we explained in the CY 2014 OPPS/ASC final rule (78 FR 75049), our calculation of geometric mean per diem costs is based on the actual provider-reported claims and cost data and, therefore, represents the cost of providing PHP services, including, for example, rising staff wages. The resulting PHP APC geometric mean per diem costs and specific payment amounts and the APC payment structure reflect the cost providers expend to maintain such programs. While we proposed the geometric mean per diem costs in this section, section 1833(t)(9)(B) of the Act requires that we apply a budget neutrality adjustment before determining final payment rates, as described in section II.A.4. of this final rule with comment period. That adjustment can result in geometric mean per diem payment rates that are higher or lower than the calculated geometric mean per diem costs. It is also important to note that the reduction to bad debt reimbursement was a result of provisions of section 3201 of the Middle Class Tax Extension and Job Creation Act of 2012. The reduction to bad debt impacted all providers eligible to receive bad debt reimbursement, as discussed in the CY 2013 ESRD final rule (77 FR 67518).

We remind PHPs that the services of physicians, clinical psychologists, clinical nurse specialists (CNSs), nurse practitioners (NPs), and physician assistants (PAs) furnished to partial hospitalization patients will continue to be billed separately as professional services and costs for these professional services are not considered to be partial hospitalization services. Therefore, payment for partial hospitalization services represents the provider's overhead costs, support staff, and the services of clinical social workers (CSWs) and occupational therapists (OTs), whose professional services are considered to be partial hospitalization services for which payment is made to the provider (65 FR 18452). We encourage CMHCs and hospital-based PHPs to review their cost reporting procedures, to ensure that they are accurately reporting PHP costs on their cost reports, and hospital-based PHPs to follow the revenue-code-to-cost-center hierarchy.

We recognize the commenters' concern regarding variance in payment rates from year to year. As we explained in the CY 2014 OPPS/ASC final rule (78 FR 75049), payment rates for PHP services fluctuate from year to year based on a variety of factors, including direct changes to the PHP APC per diem payment rate, changes to the OPPS, and provider-driven changes. Over the past several years, we have made changes to the PHP APC per diem payment rates to more accurately align the payments with costs. The changes have included establishing separate APCs and associated per diem payment rates for CMHCs and hospital-based providers based on each provider's costs. We also believe that combining the two tiers into one payment tier for 3 or more services will reduce fluctuations and better stabilize the payment rate variance. Combining the tiers systematically addresses chronic issues with inverted costs leading to inverted payment rates and creates a more stable geometric mean per diem cost, given the small number of PHP providers.

Regarding the recommendation to use median cost, we note that, in the CY 2013 OPPS/ASC final rule with comment period, we finalized our proposal to base the relative payment weights that underpin the OPPS APCs, including the PHP APCs, on geometric mean costs rather than on the median costs (77 FR 68406 through 68412). The use of geometric mean data supports our goal of aligning resource use with appropriate payment.

In response to commenters' suggestions to delay implementation of the CY 2017 per diem payment rates, or to ''freeze'' the PHP APC per diem payment rates at the CY 2016 level, as we discussed in the CY 2014 OPPS/ASC final rule with comment period (78 FR 75049), we cannot establish payment rates that do not accurately reflect current claims and cost report data. Providers attest to the accuracy of the cost reports from which we obtain PHP claims and cost data. In addition, the ratesetting methodology for calculating OPPS APC payment rates as stated in the regulations at 42 CFR 419.31 does not allow us to take an average of prior year and current PHP per diem payment rate data to determine the PHP geometric mean per diem payment rates. Rather, the regulations at § 419.31(b)(1) require us to use the most current available cost data in ratesetting. Therefore, we cannot delay or ''freeze'' the CY 2017 PHP APC per diem payment rates, or base the calculations upon an average of multiple years of data.

We appreciate the commenters' input regarding the effect any reduction in PHP payment rates would have on access to care. As noted earlier, the final PHP geometric mean per diem cost increased for hospital-based PHPs, but decreased for CMHCs. Our calculated geometric mean per diem costs are based on the actual provider-reported claims and cost data and, therefore, represent the cost of providing PHP services.

We are working to strengthen continued access to the PHP benefit for eligible beneficiaries. For example, in CY 2016 ratesetting, we conducted an extensive analysis of the ratesetting process, and discovered errors providers

had made in claims coding of revenue and HCPCS codes that were leading to lower geometric mean per diem costs. In the CY 2016 OPPS/ASC final rule with comment period (80 FR 70462 through 70467), we also included a detailed description of the ratesetting process to help PHPs record costs correctly so that we can more fully capture PHP costs in ratesetting.

To address fluctuations in payments and to protect ratesetting from aberrant data, we also implemented trims on the PHP data used in ratesetting in the CY 2016 rulemaking. For example, the CMHC ±2 standard deviation trim has protected CMHCs by removing from ratesetting several providers with aberrantly low costs per day, which would have lowered total CMHC geometric mean per diem costs, and thus lowered CMHC geometric mean per diem payment rates.

We agree that PHPs serve a vulnerable population, and appreciate the care that PHPs provide to Medicare beneficiaries. We also believe that PHPs can help patients avoid emergency department visits and inpatient stays in a cost-efficient fashion. We remain concerned about access to PHP services, and particularly about the declining numbers of CMHCs. We will continue to explore policy options for strengthening the PHP benefit.

Comment: A few commenters stated that the lack of a required standardized PHP cost center on the Medicare cost report may be creating some cost-finding nuances in the cost report itself (for example, inaccurate step-down of overhead cost allocations to the PHP program, diluted CCRs by the comingling of PHP and ''Intensive Outpatient Program (IOP)'' on the cost report, among others) that may have contributed to this decreased PHP median [sic] cost. These commenters believed that the cost decreases observed with hospital-based PHP costs may not be ''real'' cost decreases, but rather a result of Medicare cost accounting.

Response: We agree that if PHP costs are combined with other less intensive outpatient mental health treatment costs in the same cost center, the CCR could be diluted, leading to lower geometric mean per diem costs being calculated. We will analyze this further and consider adding a cost center to the hospital cost report for PHP costs only.

After consideration of the public comments we received, we are finalizing our proposals to replace the four PHP APCs (5851, 5852, 5861, and 5862) with the two new PHP APCs (5853 and 5863) and to calculate the geometric mean per diem costs using the most recent claims and cost data for each provider type. The final CY 2017 PHP APC geometric mean per diem costs for the new CMHC and hospital-based PHP APCs are shown in Table 41 below. The final PHP APC payment rates are included in Addendum A to this final rule with comment period (which is available at: *https://www.cms.gov/Medicare/Medicare-Fee-for-Service-Payment/HospitalOutpatientPPS/Hospital-Outpatient-Regulations-and-Notices.html*).

TABLE 41—CY 2017 PHP APC GEOMETRIC MEAN PER DIEM COSTS

CY 2017 APC	Group title	PHP APC geometric mean per diem costs
5853	Partial Hospitalization (3 or more services per day) for CMHCs	$124.92
5863	Partial Hospitalization (3 or more services per day) for hospital-based PHPs	213.14

3. PHP Ratesetting Process

While PHP services are part of the OPPS, PHP ratesetting has some unique aspects. To foster understanding and transparency, we provided a detailed explanation of the PHP APC ratesetting process in the CY 2016 OPPS/ASC final rule with comment period (80 FR 70462 through 70466). The OPPS ratesetting process includes various steps as part of its data development process, such as CCR determination and calculation of geometric mean per diem costs, identification of allowable charges, development of the APC relative payment weights, calculation of the APC payment rates, and establishment of outlier thresholds. We refer readers to section II. of this final rule with comment period and encourage readers to review these discussions to increase their overall understanding of the entire OPPS ratesetting process. We also refer readers to the OPPS Claims Accounting narrative, which is a supporting document to this final rule with comment period, available on the CMS Web site at: *http://www.cms.gov/Medicare/Medicare-Fee-for-Service-Payment/HospitalOutpatientPPS/Hospital-Outpatient-Regulations-and-Notices.html*; click on the link to this final rule with comment period to find the Claims Accounting narrative. We encourage CMHCs and hospital-based PHPs to review their accounting and billing processes to ensure that they are following these procedures, which should result in greater accuracy in setting the PHP payment rates.

C. Outlier Policy for CMHCs

1. Estimated Outlier Threshold

As discussed in the CY 2004 OPPS final rule with comment period (68 FR 63469 through 63470), after examining the costs, charges, and outlier payments for CMHCs, we believed that establishing a separate OPPS outlier policy for CMHCs would be appropriate. A CMHC-specific outlier policy would direct OPPS outlier payments towards the genuine cost of outlier cases, and address situations where charges were being inflated to enhance outlier payments.

We created a separate outlier policy that would be specific to the estimated costs and OPPS payments provided to CMHCs. Beginning in CY 2004, we designated a portion of the estimated OPPS outlier threshold specifically for CMHCs, consistent with the percentage of projected payments to CMHCs under the OPPS each year, excluding outlier payments, and established a separate outlier threshold for CMHCs.

The separate outlier threshold for CMHCs resulted in $1.8 million in outlier payments to CMHCs in CY 2004, and $0.5 million in outlier payments to CMHCs in CY 2005. In contrast, in CY 2003, more than $30 million was paid to CMHCs in outlier payments. We note that, in the CY 2009 OPPS/ASC final rule with comment period, we also established an outlier reconciliation policy to address charging aberrations related to OPPS outlier payments (73 FR 68594 through 68599).

In the CY 2017 OPPS/ASC proposed rule (81 FR 45675 through 45678), we proposed to continue to designate a portion of the estimated 1.0 percent outlier threshold specifically for CMHCs, consistent with the percentage of projected payments to CMHCs under

the OPPS in CY 2017, excluding outlier payments. CMHCs are projected to receive 0.03 percent of total OPPS payments in CY 2017, excluding outlier payments. This policy results in CMHC outliers being paid under limited circumstances associated with costs from complex cases, rather than as a substitute for the standard PHP payment to CMHCs. Therefore, we proposed to designate less than 0.01 percent of the estimated 1.0 percent outlier threshold for CMHCs. As we do for each rulemaking cycle, we have updated the CMHC CCRs and claims data used to model the PHP payments rates.

Based on our simulations of CMHC payments for CY 2017, in the proposed rule, we proposed to continue to set the cutoff point for CY 2017 at 3.4 times the highest CMHC APC payment rate implemented for that calendar year, which for CY 2017 is the payment rate for new CMHC APC 5853. In addition, we proposed to continue to apply the same outlier payment percentage that applies to hospitals. Therefore, for CY 2017, we proposed to continue to pay 50 percent of CMHC APC geometric mean per diem costs over the cutoff point. For example, for CY 2017, if a CMHC's cost for partial hospitalization services paid under new CMHC APC 5853 exceeds 3.4 times the proposed payment rate for proposed new CMHC APC 5853, the outlier payment would be calculated as 50 percent of the amount by which the cost exceeds 3.4 times the payment rate for new CMHC APC 5853.

In section II.G. of the proposed rule, for the hospital outpatient outlier payment policy, we proposed to set a fixed dollar threshold in addition to an APC multiplier threshold. APC 5853 is the only APC for which CMHCs may receive payment under the OPPS, and is for providing a defined set of services which are relatively low cost when compared to other OPPS services. As such, it is not necessary to also impose a fixed dollar threshold on CMHCs. Therefore, we did not propose to set a dollar threshold for CMHC outlier payments.

In summary, in this section, we proposed to continue to calculate our CMHC outlier threshold and CMHC outlier payments according to our established policies.

We did not receive any public comments on these proposals, and are finalizing them without modification.

2. CMHC Outlier Cap

a. Summary of Proposal

As discussed in the CY 2017 OPPS/ASC proposed rule (81 FR 45675 through 45678), prior to receipt of CY 2015 preliminary claims data, we analyzed CY 2014 CMHC final claims data and found that CMHC outlier payments began to increase similarly to the way they had prior to CY 2004. While many CMHCs had small outlier payments or no outlier payments, three CMHCs had very high charges for their CMHC services, which resulted in their collecting large outlier payments that exceeded their total per diem payments. CMHC total per diem payments are comprised of the Medicare CMHC total per diem payments and the beneficiary share of those per diem payments. In total, Medicare paid CMHCs $6.2 million in outlier payments in CY 2014, which was 36 percent of all CMHC total per diem payments. The 36 percent is a stark contrast to the OPPS outlier threshold of 1 percent of total OPPS payments, especially because the CMHC threshold is a fraction of that 1 percent, based on the percentage of projected per diem payments to CMHCs under the OPPS. In CY 2014, three CMHCs accounted for 98 percent of all CMHC outlier payments that year and received outlier payments that ranged from 104 percent to 713 percent of their total per diem payments.

When a CMHC's outlier payments approach or exceed its total per diem payments, it suggests that outlier payments are not being used as intended, specifically for exceptionally high-cost cases, but instead as a routine supplement to the per diem payment because outlier payments are being made for nearly all patients. The OPPS outlier policy is intended to compensate providers for treating exceptionally resource-intensive cases. As we noted in our CY 2004 OPPS/ASC final rule with comment period (68 FR 63470), outlier payments were never intended to be made for all patients and used as a supplement to the per diem payment amount. Sections 1833(t)(5)(A) and (B) of the Act specify that outlier payments are to approximate the marginal cost of care when charges, adjusted to cost, exceed a cutoff point established by the Secretary. As stated previously, for CMHCs, that cutoff point is 3.4 times the highest CMHC APC payment rate (PHP APC 0173). In the CY 2014 claims, that meant a CMHC was eligible for an outlier payment for a given day if the cost for that day was greater than 3.4 times the CMHC APC 0173 payment rate for Level II services, or 3.4 times $111.73, which equals $379.88 before wage adjustment.

We examined the total average cost per day for the three CMHCs with outlier payments that were more than 100 percent of their regular payments. In CY 2014, these three CMHCs had a total average cost per day of $1,065, which exceeded the FY 2014 unadjusted daily payment rate for inpatient psychiatric care of $713.19. We do not believe that the cost of a day of intensive outpatient CMHC services, which usually comprises 4 hours of services (mostly group therapy), should equal or exceed the cost of a 24-hour period of inpatient care, which includes 24-hour nursing care, active psychiatric treatment, room and board, drugs, and laboratory tests. Because the outpatient PHP daily payment rate includes payment for fewer items and services than the inpatient psychiatric facility daily payment rate, we believe that the cost of a day of outpatient PHP services should be significantly less than the cost of a day of inpatient psychiatric care. Therefore, we believe that those three CMHCs with total average cost per day of $1,065 demonstrated excessive outlier payments.

We believe that these excessive outlier payments to some CMHCs are the result of inflated costs, which result from artificially inflated charges. Costs are calculated by multiplying charges by the CCR. The CCR used for calculating outlier payments has established upper limits for hospitals and for CMHCs (we refer readers to the CY 2016 OPPS/ASC final rule with comment period (80 FR 70456) and the Medicare Claims Processing Internet-only Manual, Chapter 4, Section 10.11.9, available at *https://www.cms.gov/Regulations-and-Guidance/Guidance/Manuals/Downloads/clm104c04.pdf*). We also believe that these excessive outlier payments do not approximate the marginal cost of care when costs exceed the established cutoff point, as specified in sections 1833(t)(5)(A) and (B) of the Act. The resulting outlier payments would be inappropriate. We are entrusted with accurately paying CMHCs participating in Medicare. Therefore, we are addressing outlier payments resulting from inflated costs. By continuing this pattern of inflated charges for partial hospitalization services, CMHCs will receive a disproportionate share of outlier payments compared to other OPPS providers that do not artificially inflate their charges, thereby limiting outlier payments for truly deserving cases.

Based on our available claims data, we chose to apply 30 percent of total per diem payments as a cutoff point for reasonable outlier payments. In the CY 2014 claims data, the average charge per day for the 3 CMHCs that received outlier payments greater than or equal to 30 percent of their total per diem payments was $3,233, which was nearly 8 times greater than the average charge

per day for the CMHCs that received outlier payments that were less than 30 percent of their total per diem payments. In our review of CY 2015 claims data for the CY 2017 OPPS/ASC proposed rule, the average charge per day for the CMHCs that received outlier payments greater than or equal to 30 percent of their total per diem payments was $1,583, which was more than 3 times greater than the average charge per day for the CMHCs that received outlier payments that were less than 30 percent of their total per diem payments.

In our review of CY 2015 claims data for the CY 2017 proposed rulemaking, Medicare paid CMHCs $3.2 million in outlier payments, with over 99 percent of those payments made to 4 CMHCs. These outlier payments were 26 percent of all CMHC total per diem payments, and ranged from 39 percent to 179 percent of the individual CMHC's total per diem payments. Total outlier payments to CMHCs decreased from $6.2 million in CY 2014 to $3.2 million in CY 2015 because the CMHC that received the largest outlier payments in CY 2014 no longer had outlier payments in CY 2015. This CMHC revised its charge structure downward. However, two additional CMHCs that did not receive outlier payments in CY 2014 began receiving outlier payments in CY 2015 that were greater than or equal to 30 percent of their total payments, which suggests a continuing, if not growing problem.

Under the current outlier reconciliation process, a MAC will reconcile a CMHC's outlier payments at the time of final cost report settlement if the CMHC's CCR has changed by 0.10 or more and if the CMHC received any outlier payments. This process is described in Section 10.7.2, Chapter 4, of the Medicare Claims Processing Manual, which is available at: *https://www.cms.gov/Regulations-and-Guidance/Guidance/Manuals/Downloads/clm104c04.pdf*. Typically, final cost report settlement occurs within 12 months of the MAC's acceptance of the cost report. However, because cost reports are filed up to 5 months after the CMHC's fiscal year end, CMHC outlier reconciliation can occur more than a year after outlier overpayments are made. Long timeframes between outlier payment and outlier reconciliation at final cost report settlement have also allowed cases with outlier overpayments to continue and to grow. For example, one CMHC with inflated charges in CY 2013 continued to have inflated charges in CY 2014, and received more than double its CY 2013 outlier payments in CY 2014. This CMHC did not receive outlier payments in CY 2015 because it revised its charge structure downward and, therefore, no longer had costs qualifying for outlier payments.

Although efforts geared towards limiting very high outlier payments to CMHCs are occurring, such as the outlier reconciliation process, these efforts typically occur after the outlier payments are made. We would prefer to focus on stopping questionable outlier payments *before* they occur, to avoid the risk that a provider would be unable to repay Medicare after those overpayments occur. Therefore, we considered whether a broader, supplementary policy change to our CMHC outlier payment policy might also be warranted to mitigate possible billing vulnerabilities associated with very high outlier payments, while at the same time ensuring that we adhere to the existing statutory requirements related to covering the marginal cost of care for exceptionally resource-intensive cases. We want to ensure that CMHCs that provide services that represent the cost of care for legitimate high-cost cases are able to continue to receive outlier payments.

Given these program integrity concerns and our longstanding history of introducing CMHC-specific outlier policies when necessary (the CMHC-specific outlier threshold and the CMHC-specific reconciliation process), we proposed to implement a CMHC outlier payment cap to be applied at the provider level, such that in any given year, an individual CMHC would receive no more than a set percentage of its CMHC total per diem payments in outlier payments. This outlier payment cap would only affect CMHCs, and would not affect other provider types. This outlier payment cap would be in addition to and separate from the current outlier policy and reconciliation policy in effect. We proposed that the CMHC outlier payment cap be set at 8 percent of the CMHC's total per diem payments. As noted previously, each CMHC's total per diem payments are comprised of its Medicare CMHC total per diem payments plus the total beneficiary share of those per diem payments. If implemented, this proposal would mean that a CMHC's total outlier payments in a calendar year could not exceed 8 percent of its total per diem payments in that year.

To determine this CMHC outlier cap percentage, we performed analyses to model the impact that a variety of cap percentages would have on CMHC outlier payments. We want to ensure that any outlier cap policy would not disadvantage CMHCs with truly high-cost cases that merit an outlier payment, while also protecting the benefit from making payments for outlier cases that exceed the marginal cost of care. In the CY 2017 OPPS/ASC proposed rule, we used CY 2015 claims data to perform a detailed impact analysis of CMHC outlier payments. That analysis showed that out of 51 CMHCs with paid claims in CY 2015, 9 CMHCs received outlier payments. We separated these 9 CMHCs into 4 CMHCs that received outlier payments that were greater than or equal to 30 percent of their total CMHC payments in CY 2015, and 5 CMHCs that received outlier payments that were less than 30 percent of their total CMHC payments in CY 2015.

In the CY 2017 proposed rule, the 5 CMHCs that received outlier payments that were less than 30 percent of their total per diem payments received a total of $11,496 in outlier payments. We believe that these 5 CMHCs are representative of the types of CMHCs we are most concerned about that would be disadvantaged with an outlier payment policy that includes a cap at the individual CMHC level. We tested the effects of CMHC outlier caps ranging from 3 percent to 10 percent on these two groups of CMHCs. Our analysis focused on total CMHC per diem payments, total CMHC outlier payments, and percentage reductions in payments if a CMHC outlier payment cap were imposed, as shown in Table 20 of the proposed rule (81 FR 45677).

Table 20 of the proposed rule showed that 4 out of the 5 CMHCs that received outlier payments that were less than 30 percent of their total per diem payments received outlier payments that were less than 1 percent of their total per diem payments and, therefore, would be unaffected by a CMHC outlier payment cap. The fifth CMHC received outlier payments that were 9.4 percent of its total per diem payments and is the only CMHC that would have been affected by a CMHC outlier payment cap applied at the provider level. The effect on this CMHC was shown under the various cap percentage options. At the 8 percent level, this CMHC's outlier payments would have been reduced by $1,628. A 10-percent cap would have had no effect on this CMHC. The difference in total outlier payments to all CMHCs between the 8 percent and 10 percent cap levels was relatively small (approximately $58,000).

We also conducted our CMHC outlier cap analysis using final CY 2014 claims data. When we evaluated the effect of the different CMHC provider-level outlier cap percentages on the CMHCs with outlier payments that were less than 30 percent of their total per diem

payments, using the final CY 2014 claims data, we found that 5 CMHCs would be affected by an 8-percent cap, and 4 CMHCs would be affected by a 10-percent cap, with a difference in outlier payments of only $4,069. However, an 8-percent cap compared to a 10-percent cap saved more than $37,000 in outlier payments to the CMHCs that were charging excessively (data not shown).

We considered both the CY 2014 and CY 2015 claims data as we sought to balance our concern about disadvantaging CMHCs with our interest in protecting the benefit from excessive outlier payments by proposing an 8-percent CMHC outlier payment cap. An 8-percent CMHC outlier payment cap would mitigate potential inappropriate outlier billing vulnerabilities by limiting the impact of inflated CMHC charges on outlier payments. The 8-percent cap would have reduced outlier payments to the 4 CMHCs that received outlier payments that were greater than or equal to 30 percent of their total per diem payments in CY 2015 by $3.0 million dollars, or 93.3 percent.

Therefore, for CY 2017 and subsequent years, we proposed to apply a CMHC outlier payment cap of 8 percent to each CMHC's total per diem payments, such that in any given calendar year, an individual CMHC would not receive more than 8 percent of its CMHC total per diem payments in outlier payments.

We invited public comments on the CMHC provider-level outlier cap percentage. We also proposed to revise § 419.43(d) of the regulations by adding a paragraph (7) to require that CMHC outlier payments for the calendar year be subject to a CMHC outlier payment cap, applied at the individual CMHC level, that is, 8 percent of each CMHC's total per diem payments for that same calendar year.

We did not receive any public comments on these proposals.

b. CY 2017 Final Rule Update and Policy

Updated analysis using CY 2015 final claims data for this CY 2017 final rule with comment period continued to show that Medicare paid CMHCs $3.2 million in outlier payments, with over 99 percent of those payments made to 4 CMHCs. These outlier payments were 23 percent of all CMHC total per diem payments, and ranged from 42 percent to 163 percent of the individual CMHC's total per diem payments. The updated CY 2015 data showed that out of 52 CMHCs with paid claims in CY 2015, 9 CMHCs received outlier payments.

Five CMHCs with outlier payments that were less than 30 percent of their total per diem payments received a total of $11,643 in outlier payments. Four CMHCs with outlier payments that were greater than or equal to 30 percent of their total per diem payments received $3.2 million in outlier payments, which was 99.6 percent of all CMHC outlier payments made in CY 2015. The average charge per day for the 4 CMHCs that received outlier payments that were greater than or equal to 30 percent of their total per diem payments was $1,566, which was 3 times greater than the average charge per day for the 5 CMHCs that received outlier payments that were less than 30 percent of their total per diem payments.

We tested the effects of CMHC outlier caps ranging from 3 percent to 10 percent on these two groups of CMHCs using the final CY 2015 claims data as shown in Table 42 below. Our analysis focused on total CMHC per diem payments, total CMHC outlier payments, and percentage reductions in payments if a CMHC outlier payment cap were imposed. Because 4 out of the 5 CMHCs that received outlier payments that were less than 30 percent of their total per diem payments received outlier payments that were less than 1 percent of their total per diem payments, Table 42 below shows that these providers would be unaffected by a CMHC outlier payment cap. The fifth CMHC with outlier payments that were less than 30 percent of its total per diem payments received outlier payments that were 8.0 percent of its total per diem payments. This CMHC would not have been affected by an 8 percent or 10 percent CMHC outlier payment cap applied at the provider level because its outlier payments did not exceed 8 or 10 percent.

TABLE 42—EFFECT OF CMHC OUTLIER CAP SIMULATION ON OUTLIER PAYMENTS

	Simulated CMHC outlier payments using final CY 2015 claims data						
	Total per diem payments	Actual outlier payments	3% cap	5% cap	6% cap	8% cap	10% cap
All 52 CMHCs	$14,022,861	$3,245,624					
Outlier Payments <30% of Total Per Diem Payments							
Total Actual Payments (n = 5)	$1,419,316	11,643					
Simulated Outlier Payments			$4,869	$7,581	$8,936	$11,643	$11,643
Reduction in Outlier Payments			$6,775	$4,063	$2,707		
% Reduction			58.2%	34.9%	23.2%	0.0%	0.0%
CMHCs Affected			1	1	1		
Outlier Payments ≥30% of Total Per Diem Payments							
Total Actual Payments (n = 4)	$3,154,279	$3,233,981					
Simulated Outlier Payments			$94,628	$157,714	$189,257	$252,342	$315,428
Reduction in Outlier Payments			$3,150,996	$3,087,910	$3,056,367	$2,993,282	$2,930,196
% Reduction			97.4%	95.5%	94.5%	92.6%	90.6%
CMHCs Affected			4	4	4	4	4

As noted in the CY 2017 OPPS/ASC proposed rule, we sought to balance our concern about disadvantaging CMHCs with our interest in protecting the benefit from excessive outlier payments by proposing an 8-percent CMHC outlier payment cap. The updated CY 2015 claims data for this final rule with comment period shows that an 8-percent CMHC outlier payment cap would mitigate potential inappropriate outlier billing vulnerabilities by limiting

the impact of inflated CMHC charges on outlier payments. The 8-percent cap would have reduced outlier payments to the CMHCs that received outlier payments that were greater than or equal to 30 percent of their total per diem payments in CY 2015 by $3.0 million dollars, or 92.6 percent, without affecting any of the CMHCs that received outlier payments that were less than 30 percent of their CY 2015 total per diem payments.

We did not receive any public comments on our proposals and are finalizing them as proposed. As we noted in the proposed rule, our existing outlier reconciliation policy will continue to remain in effect with the final 8 percent CMHC outlier payment cap serving as a complement. We also are finalizing our proposed revision of § 419.43(d) of the regulations by adding a paragraph (7) to require that CMHC outlier payments for the calendar year be subject to a CMHC outlier payment cap, applied at the individual CMHC level, that is, 8 percent of each CMHC's total per diem payments for that same calendar year.

We will continue to monitor the trends in outlier payments and also monitor these policy effects. Also, we will analyze CMHC outlier payments at the provider level, relative to the 8 percent CMHC outlier cap. Finally, we will continue to utilize program integrity efforts, as necessary, for those CMHCs receiving excessive outlier payments.

3. Implementation Strategy for the 8-Percent Cap on CMHC Outlier Payments

CMS envisions that the 8-percent CMHC cap on outlier payments will be managed by the claims processing system. We will provide detailed information on our implementation strategy through sub-regulatory channels. However, to foster a clearer understanding of the CMHC outlier payment cap, we are providing the following high-level summary of the preliminary approach we envision.

For each CMHC, for a given calendar year, the claims processing system will maintain a running tally of year-to-date (YTD) total CMHC per diem payments (Medicare payments and the beneficiary share) and YTD actual CMHC outlier payments. YTD outlier payments for that calendar year could never exceed 8 percent of YTD CMHC total per diem payments for that CMHC for that calendar year. For example, we will determine whether or not a given provider-specific outlier payment exceeds the 8-percent cap on a ''rolling'' basis. Under such an implementation approach, for each CMHC, the claims processing system will maintain a running tally of the YTD total CMHC per diem payments. The claims processing system will ensure that each time an outlier claim for a CMHC is processed, actual outlier payments will never exceed 8 percent of the CMHC's YTD total payments. While a CMHC will receive its per diem payment timely, the outlier portion of the claim will be paid as the CMHC's YTD payments support payment of the outlier. As part of our routine claims processing, we will utilize a periodic review process under which outlier payments that were withheld will subsequently be paid if the CMHC's total payments have increased to the point that its outlier payments can be made. This process will result in additional cash flow to CMHCs. As noted previously, we will also maintain our existing outlier reconciliation policy, which is applied at the time of cost report final settlement if the CMHC's CCR changed by 0.10 or more. With regard to revenue tracking by CMHCs, distinct coding will be used on the CMHC's remittance advice when outlier payments are withheld, assisting receivables accountants in identifying and accounting for the differences between expected and actual payments.

4. Summary of Policies

In summary, for CY 2017, we are finalizing our proposals to:

- Continue to designate a portion of the estimated 1.0 percent outlier threshold specifically for CMHCs, consistent with the percentage of projected payments to CMHCs under the OPPS in CY 2017, excluding outlier payments;
- Implement an 8-percent cap on CMHC outlier payments at the individual CMHC provider level for CY 2017 and subsequent years and change the regulations at § 419.43(d) accordingly;
- Continue to set the cutoff point for CMHC outlier payments in CY 2017 at 3.4 times the highest CMHC APC payment rate implemented for that calendar year, which for CY 2017 is new CMHC APC 5853; and
- Continue to pay 50 percent of CMHC APC geometric mean per diem costs over the cutoff point in CY 2017.

We believe that these CMHC outlier policies will minimize the impact of inflated CMHC charges on outlier payments, result in a better approximation of the marginal cost of care beyond the applicable cutoff point compared to the current process, and better target outlier payments to truly exceptionally high-cost cases.

IX. Procedures That Will Be Paid Only as Inpatient Procedures

A. Background

We refer readers to the CY 2012 OPPS/ASC final rule with comment period (76 FR 74352 through 74353) for a full historical discussion of our longstanding policies on how we identify procedures that are typically provided only in an inpatient setting (referred to as the inpatient only (IPO) list) and, therefore, will not be paid by Medicare under the OPPS, and on the criteria that we use to review the IPO list each year to determine whether or not any procedures should be removed from the list. The complete list of codes (IPO list) that will be paid by Medicare in CY 2017 as inpatient only procedures is included as Addendum E to this final rule with comment period (which is available via the Internet on the CMS Web site).

B. Changes to the Inpatient Only (IPO) List

In the CY 2017 OPPS/ASC proposed rule (81 FR 45678 through 45679), for CY 2017, we proposed to use the same methodology (described in the November 15, 2004 final rule with comment period (69 FR 65834)) of reviewing the current list of procedures on the IPO list to identify any procedures that may be removed from the list. The established criteria upon which we make such a determination are as follows:

1. Most outpatient departments are equipped to provide the services to the Medicare population.
2. The simplest procedure described by the code may be performed in most outpatient departments.
3. The procedure is related to codes that we have already removed from the IPO list.
4. A determination is made that the procedure is being performed in numerous hospitals on an outpatient basis.
5. A determination is made that the procedure can be appropriately and safely performed in an ASC, and is on the list of approved ASC procedures or has been proposed by us for addition to the ASC list.

Using the above-listed criteria, we proposed to remove the following six codes (four spine procedure codes and two laryngoplasty codes) from the IPO list for CY 2017:

- CPT code 22840 (Posterior non-segmental instrumentation (*e.g.,* Harrington rod technique, pedicle fixation across 1 interspace, atlantoaxial transarticular screw fixation, sublaminar wiring at C1, facet screw fixation) (List

separately in addition to code for primary procedure));

- CPT code 22842 (Posterior segmental instrumentation (eg., pedicle fixation, dual rods with multiple hooks and sublaminar wires); 3 to 6 vertebral segments (List separately in addition to code for primary procedure));
- CPT code 22845 (Anterior instrumentation; 2 to 3 vertebral segments (List separately in addition to code for primary procedure));
- CPT code 22858 (Total disc arthroplasty (artificial disc), anterior approach, including discectomy with end plate preparation (includes osteophytectomy for nerve root or spinal cord decompression and microdissection); second level, cervical (List separately in addition to code for primary procedure));
- CPT code 31584 (Laryngoplasty; with open reduction of fracture); and
- CPT code 31587 (Laryngoplasty, cricoid split).

We reviewed the clinical characteristics of the four spine procedure codes and related evidence, including input from multiple physician specialty societies whose members specialize in spine surgery, and determined the four spine procedure codes listed above to be appropriate candidates for removal from the IPO list. These four spine procedure codes are add-on codes to procedures that are currently performed in the HOPD and describe variations of (including additional instrumentation used with) the base code procedure. Therefore, we believe these spine procedures satisfy criterion 3 listed above as they are related to codes that we have already removed from the IPO list. Because these four spine procedure codes are add-on codes, in accordance with the regulations at 42 CFR 419.2(b)(18), we proposed to package them with the associated procedure and assign them status indicator ''N.''

We also reviewed the clinical characteristics of the two laryngoplasty procedure codes and related evidence, and determined that the two laryngoplasty procedure codes listed above are appropriate candidates for removal from the IPO list because we believe they satisfy criterion 3 listed above (that is, the procedure is related to codes that we have already removed from the IPO list). These two codes are related to and clinically similar to CPT code 21495 (Open treatment of hyoid fracture), which is currently not on the IPO list. We proposed that the two laryngoplasty procedure codes would be assigned to APC 5165 (Level 5 ENT Procedures) with status indicator ''J1.''

Comment: Several commenters supported the proposal to remove CPT codes 22840, 22842, 22845, 22858, 31584, and 31587 from the IPO list for CY 2017. One commenter opposed the proposal to remove these codes from the IPO list, stating that although the spine codes were add-on codes for procedures currently performed in the HOPD, these codes represented variations in the instrumentation used which made them more complex than the base code procedures. The commenter also believed that the two laryngoplasty codes were too complex to be performed in the HOPD.

Another commenter opposed the removal of CPT codes 31584 and 31587 from the IPO list, stating that these procedures often require prolonged use of intravenous pain medications and close monitoring of drainage tubes. The commenter also stated that both procedures frequently involve patient admission to the intensive care unit postoperatively, as they warrant assessments of respiratory status and oxygenation at frequent intervals to evaluate for postoperative swelling.

Response: We appreciate the commenters' support. We disagree with the commenter that CPT codes 22840, 22842, 22845, 22858, 31584, and 31587 should remain on the IPO list. As discussed in the CY 2017 OPPS/ASC proposed rule (81 FR 45678 through 45679), we believe that these codes satisfy criterion 3 for removal from the IPO list; that is, being a procedure that is related to codes that we have already removed from the IPO list. We remind the commenter and the public that removal of a code from the IPO list does not mean that all procedures described by the code or even a majority of procedures must or should be performed in the outpatient setting. Removal of a procedure from the IPO list only means that the procedure is no longer precluded from being paid under the OPPS if it is performed in the outpatient setting. The cases that the commenters are concerned about can all still be performed on an inpatient basis if appropriate.

Comment: Several commenters disagreed with the proposal to package the four spine codes proposed to be removed from the IPO list with associated procedure and assign them status indicator ''N.'' The commenters requested that CMS allow for separate payment for these procedures.

Response: As specified in 42 CFR 419.2(b)(18), services described by add-on codes are packaged costs that are integral, ancillary, supportive, dependent, or adjunctive to performing a procedure or furnishing a service on an outpatient basis. The procedures described by the four spinal codes are all procedures described by add-on codes. The costs for the procedures described by these codes are included in the payment rate for the related procedure or service. Therefore, we will not provide separate payment for these codes.

Comment: Other commenters requested that the following additional codes be removed from the IPO list:

- CPT code 22585 (Arthrodesis, anterior interbody, including disc space preparation, discectomy, osteophytectomy, and decompression of spinal cord and/or nerve roots; each additional interspace (List separately in addition to code for primary procedure));
- CPT code 22633 (Arthrodesis, combined posterior or posterolateral technique with posterior interbody technique including laminectomy and/or discectomy sufficient to prepare interspace (other than for decompression), single interspace and segment; lumbar;
- CPT code 22850 (Removal of posterior nonsegmental instrumentation (eg., Harrington rod);
- CPT code 23472 (Arthroplasty, glenohumeral joint; total shoulder (glenoid and proximal humeral replacement (eg., total shoulder); and
- CPT code 27130 (Arthroplasty, acetabular and proximal femoral prosthetic replacement (total hip arthroplasty), with or without autograft or allograft.

Response: We agree with the commenter at this time only for removal of the procedure described by CPT code 22585, which is an add-on code, from the IPO list. The base code for CPT code 22585, CPT code 22554 (Arthrodesis, anterior interbody technique, including minimal discectomy to prepare interspace (other than for decompression); cervical below C2), is assigned to APC 5115 (Level 5 Musculoskeletal Procedures). We believe that cases involving CPT codes 22554 and 22585 are sufficiently comparable to cases involving only CPT code 22554, such that it is appropriate to remove CPT code 22585 from the IPO list. Because CPT code 22585 is an add-on code, it is being assigned status indicator ''N.'' After reviewing the clinical characteristics of these procedures described by CPT codes 22633, 22850, 23472, and 27130, we do not believe that removal from the IPO list is warranted at this time.

After consideration of the public comments we received, we are removing CPT codes 22585, 22840, 22842, 22845, 22858, 31584, and 31587 from the IPO

list for CY 2017. The complete list of codes (the IPO list) that will be paid by Medicare in CY 2017 as inpatient only procedures is included as Addendum E to this final rule with comment period (which is available via the Internet on the CMS Web site).

C. Response To Solicitation of Public Comments on the Possible Removal of Total Knee Arthroplasty (TKA) Procedure From the IPO List

1. Background

Total knee arthroplasty (TKA) or total knee replacement, CPT code 27447 (Arthroplasty, knee, condyle and plateau; medical and lateral compartments with or without patella resurfacing (total knee arthroplasty)), has traditionally been considered an inpatient surgical procedure. The procedure described by CPT code 27447 was placed on the original IPO list in the 2000 OPPS final rule (65 FR 18781). In 2000, the primary factors that were used to determine the assignment of a procedure to the IPO list were as follows: (1) The invasive nature of the procedure; (2) the need for at least 24 hours of postoperative care; and (3) the underlying physical condition of the patient who would require the surgery (65 FR 18443 and 18455). In 2000, the geometric mean average length of stay for the DRG to which an uncomplicated TKA procedure was assigned was 4.6 days, and in 2016, the average length of stay for a current uncomplicated TKA procedure for the MS–DRG is 2.8 days.

Recent innovations have enabled surgeons to perform TKA on an outpatient basis on non-Medicare patients (both in the HOPD and in the ASC). In this context, ''outpatient'' services include both same day outpatient surgery (that is, the patient goes home on the same day that the outpatient surgery was performed) and outpatient surgery that includes one overnight hospital stay for recovery from the surgery. These innovations in TKA care include minimally invasive techniques, improved perioperative anesthesia, alternative postoperative pain management, and expedited rehabilitation protocols. Patients generally benefit from a shorter hospital stay. Some of these benefits include a likelihood of fewer complications, more rapid recovery, increased patient satisfaction, recovery at home with the assistance of family members, and a likelihood of overall improved outcomes. On the contrary, unnecessary inpatient hospitalization exposes patients to the risk of hospital-acquired conditions such as infections and a host of other iatrogenic mishaps.

Like most surgical procedures, TKA needs to be tailored to the individual patient's needs. Patients with a relatively low anesthesia risk and without significant comorbidities who have family members at home who can assist them would likely be good candidates for an outpatient TKA procedure. On the other hand, patients with severe illnesses aside from their osteoarthritis would more likely require inpatient hospitalization and possibly postacute care in a skilled nursing facility or other facility. Surgeons who have discussed outpatient TKA procedures with us have emphasized the importance of careful patient selection and strict protocols to optimize outpatient TKA outcomes. These protocols typically manage all aspects of the patient's care, including the at-home preoperative and postoperative environment, anesthesia, pain management, and rehabilitation to maximize rapid recovery and ambulation.

In the CY 2013 OPPS/ASC proposed rule (77 FR 45153), we proposed to remove the procedure described by CPT code 27447 from the IPO list. We proposed to remove the procedure described by CPT code 27447 from the IPO list because we believed that the procedure could be appropriately provided and paid for as a hospital outpatient procedure for some Medicare beneficiaries, based upon the five evaluation criteria for removal from the IPO list discussed earlier. The public comments we received on the CY 2013 proposal varied. There were several surgeons and other stakeholders who supported the proposal. They believed that, given thorough preoperative screening by medical teams with significant experience and expertise involving knee replacement procedures, the TKA procedure could be provided on an outpatient basis for some Medicare beneficiaries. These commenters discussed recent advances in total knee replacement technology and surgical care protocols, including improved perioperative anesthesia, and expedited rehabilitation protocols, as well as significant enhancements to the postoperative process, such as improvements in pain management, early mobilization, and careful monitoring. These commenters also stated that early preventive intervention for the most common medical complications has decreased the average length of hospital stays to the point that a TKA procedure can now be performed on an outpatient basis in certain cases. The commenters noted significant success involving same day discharge for patients who met the screening criteria and whose experienced medical teams were able to perform the procedure early enough in the day for the patients to achieve postoperative goals, allowing home discharge by the end of the day. The commenters believed that the benefits of furnishing a TKA procedure on an outpatient basis will lead to significant enhancements in patient well-being and cost savings to the Medicare program, including shorter hospital stays resulting in fewer medical complications, improved results, and enhanced patient satisfaction. However, the majority of the commenters disagreed with the CY 2013 proposal and believed that it would be unsafe to perform outpatient TKA for Medicare beneficiaries. (We refer readers to 77 FR 68419 for a discussion of these comments.) After consideration of these public comments, we decided not finalize the proposal, and the procedure described by CPT code 27447 remains on the IPO list.

We also note that, not uncommonly, we receive questions from the public about the IPO list that lead us to believe that some members of the public may misunderstand certain aspects of the IPO list. Therefore, two important principles of the IPO list must be reiterated at the outset of this discussion. First, just because a procedure is not on the IPO list *does not* mean that the procedure cannot be performed on an inpatient basis. IPO list procedures must be performed on an inpatient basis (regardless of the expected length of the hospital stay) in order to qualify for Medicare payment, but procedures that are not on the IPO list can be and very often are performed on individuals who are inpatients (as well as individuals who are hospital outpatients and ASC patients). Second, the IPO list status of a procedure has no effect on the MPFS professional payment for the procedure. Whether or not a procedure is on the IPO list is not in any way a factor in the MPFS payment methodology.

2. Discussion of TKA and the IPO List

Since 2000, when the IPO list was established, there have been significant developments in both TKA technique and patient care. The advances in TKA technique and patient care are discussed in general terms above. As noted above, in 2000, the criteria by which procedures were reviewed to determine IPO list assignment were as follows: (1) The invasive nature of the procedure; (2) the need for at least 24 hours of postoperative care; and (3) the underlying physical condition of the patient who would require the surgery.

In order to discuss the possibility of removing TKA procedures from the IPO list, we believe it is helpful to explore each of these criteria in turn as they apply to present-day TKA. In the CY 2017 OPPS/ASC proposed rule (81 FR 45680), we solicited comment from the public on a list of questions that relate to considering removing TKA from the IPO list in the future.

The first criterion was ''the invasive nature of the procedure.'' We elaborated on this criterion in the 2000 OPPS final rule by stating: ''We believe that certain surgically invasive procedures on the brain, heart, and abdomen, such as craniotomies, coronary artery bypass grafting, and laparotomies, indisputably require inpatient care, and therefore are outside the scope of outpatient services'' (65 FR 18456). TKA does not invade the brain, heart, or abdomen; instead, like several other outpatient orthopedic surgeries, it is an operation on the knee joint. A similar procedure described by CPT code 27446 (Arthroplasty, knee, condyle and plateau; medical OR lateral compartment) (unicompartmental knee replacement) was removed from the IPO list on January 1, 2002, and also was added to the ASC covered surgical procedures list in 2008. The degree of invasiveness of TKA as compared to other major surgical procedures would not appear to prohibit its removal from the IPO list.

The second IPO list criterion from the 2000 OPPS final rule is ''the need for at least 24 hours of postoperative recovery time or monitoring before the patient can be safely discharged.'' Currently, for procedures that are not on the IPO list, services furnished to patients requiring 24 hours of postoperative recovery time may be payable as either outpatient services or inpatient services, depending on the condition of the patient. Therefore, the need for at least 24 hours of postoperative recovery time or monitoring in many cases should not require IPO list placement.

The third criterion is ''the underlying physical condition of the patient who would require the surgery.'' For this criterion to be the basis of an IPO list assignment seems to presume a relatively homogeneous and morbid patient population undergoing the surgical procedure. Otherwise, patients with a good underlying physical condition could be considered for outpatient surgery while those with a poor underlying physical condition might be more appropriate for inpatient admission. TKA candidates, although they all have osteoarthritis severe enough to warrant knee replacement, are a varied group in which the anticipated length of hospitalization is dictated more by comorbidities and diseases of other organ systems. Some patients may be appropriate for outpatient surgery while others may be appropriate for inpatient surgery.

3. Topics and Questions for Public Comment

In the CY 2017 OPPS/ASC proposed rule (81 FR 45680), we sought public comments on whether we should remove the procedure described by CPT code 27447 from the IPO list from all interested parties, including the following groups or individuals: Medicare beneficiaries and advocate associations for Medicare beneficiaries; orthopedic surgeons and physician specialty societies that represent orthopedic surgeons who perform TKA procedures; hospitals and hospital trade associations; and any other interested stakeholders. We sought public comments on any of the topics discussed earlier in addition to the following questions:

1. Are most outpatient departments equipped to provide TKA to some Medicare beneficiaries?

2. Can the simplest procedure described by CPT code 27447 be performed in most outpatient departments?

3. Is the procedure described by CPT code 27447 sufficiently related to or similar to the procedure described by CPT code 27446 such that the third criterion listed at the beginning of this section for identifying procedures that may be removed from the IPO list, that is, the procedure under consideration for removal from the IPO list is related to codes that we have already removed from the IPO, is satisfied?

4. How often is the procedure described by CPT code 27447 being performed on an outpatient basis (either in an HOPD or ASC) on non-Medicare patients?

5. Would it be clinically appropriate for some Medicare beneficiaries in consultation with his or her surgeon and other members of the medical team to have the option of a TKA procedure as a hospital outpatient, which may or may not include a 24-hour period of recovery in the hospital after the operation?

6. CMS is currently testing two episode-based payment models that include TKA: The Comprehensive Care for Joint Replacement (CJR) Model and the Bundled Payment for Care Improvements (BPCI) Model. These models hold hospitals and, in the case of the BPCI, physicians and postacute care providers, responsible for the quality and cost of an episode of care. Providers participating in the CJR model or BPCI Models 2 and 4 initiate episodes with admission to the hospital of a beneficiary who is ultimately discharged under an included MS–DRG. Both initiatives include MS–DRGs 469 (Major Joint Replacement or Reattachment of Lower Extremity with MCC) and 470 (Major Joint Replacement or Reattachment of Lower Extremity without MCC). Depending on the model, the episode ends 30 to 90 days postdischarge in order to cover the period of recovery for beneficiaries. Episodes include the inpatient stay and all related items and services paid under Medicare Part A and Part B for all Medicare fee-for-service (FFS) beneficiaries, with the exception of certain exclusions.

In the BPCI and CJR models, services are paid on an FFS basis with a retrospective reconciliation for all episodes included in a defined time period (quarterly in BPCI and annually in CJR). At reconciliation, actual spending is compared to a target price. The target price is based on historical episode spending. If CMS were to remove the procedure described by CPT code 27447 from the IPO list and pay for outpatient TKA procedures, the historical episode spending data may no longer be an accurate predictor of episode spending for beneficiaries receiving inpatient TKA procedures. As such, establishing an accurate target price based on historical data would become more complicated. This is because some patients who previously would have received a TKA procedure in an inpatient setting may receive the procedure on an outpatient basis if the procedure is removed from the IPO list.

We sought public comment on how CMS could modify the CJR and BPCI models if the TKA procedure were to be moved off the IPO list. Specifically, we sought public comment on how to reflect the shift of some Medicare beneficiaries from an inpatient TKA procedure to an outpatient TKA procedure in the BPCI and CJR model pricing methodologies, including target price calculations and reconciliation processes. Some of the issues CMS faces include the lack of historical data on both the outpatient TKA episodes and the average episode spending for beneficiaries who would continue to receive the TKA procedure on an inpatient basis. Because historically the procedure described by CPT code 27447 has been on the IPO list, there is no claims history for beneficiaries receiving TKA on an outpatient basis. In addition, we sought public comment on the postdischarge care patterns for Medicare beneficiaries that may receive an outpatient TKA procedure if it were removed from the IPO list and how this

may be similar or different from these beneficiaries' historical postdischarge care patterns. For example, Medicare beneficiaries who are appropriate candidates for an outpatient TKA procedure may be those who, in the past, would have received outpatient physical therapy services as follow-up care after an inpatient TKA procedure. CMS would need to develop a methodology to ensure model target prices account for the potentially higher risk profiles of Medicare beneficiaries who would continue to receive TKA procedures in inpatient settings.

Comment: Numerous comments responded to CMS' solicitation for discussion of the removal of TKA from the IPO list. The overwhelming majority of the commenters (which included organizations and individuals) supported removing TKA from the IPO list. The commenters who supported the removal of TKA from the IPO list included ASCs, therapeutic professional associations, hospital associations, as well as many surgeons. A number of facilities indicated that they were currently performing TKA procedures on an outpatient basis in both the HOPD and ASC on non-Medicare patients. Several organizations cited innovations such as less invasive surgical techniques, improved perioperative anesthesia, alternative postoperative pain management, expedited rehabilitation protocols, and the similarity of the TKA procedure to other procedures currently being performed as outpatient services (namely CPT code 27446 (Unicompartmental Knee Arthroplasty)) as reasons to remove the procedure from the IPO list. Most organizations in support of the removal of TKA from the IPO list noted that an appropriate patient selection protocol should be used to determine the patients who are best suited for outpatient joint replacement. Some commenters requested that total hip arthroplasty and total shoulder replacement procedures also be removed from the IPO list.

A few commenters representing professional organizations, health systems, and hospital associations, opposed the removal of a TKA procedure from the IPO list. These commenters believed that the increased likelihood that Medicare patients have comorbidities that require the need for intensive rehabilitation after a TKA procedure preclude this procedure from being performed in the outpatient setting. They also stated that most outpatient departments are not currently equipped to provide TKA procedures to Medicare beneficiaries, which require exceptional patient selection, exceptional surgical technique, and a carefully constructed postoperative care plan. One commenter opined that only exceptional surgeons can perform outpatient TKA procedures, and, for this reason, CMS should not pay for TKA procedures performed in an outpatient setting. One commenter believed that the procedure described by CPT code 27446 can be performed through a much smaller and limited incision than required by CPT code 27447 and, therefore, was a less complex procedure.

Other commenters were concerned about the implications that the removal of the TKA procedure from the IPO list would have for the pricing methodologies, target pricing, and reconciliation process of the procedure in certain Medicare payment models (that is, the Comprehensive Care for Joint Replacement and the Bundled Payments for Care Improvement models). They requested modifications to these models if the TKA procedure is removed from the IPO list.

Response: We thank the stakeholder public for the many detailed comments on this topic. We will consider all of these comments in future policy making.

X. Nonrecurring Policy Changes

A. Implementation of Section 603 of the Bipartisan Budget Act of 2015 Relating to Payment for Certain Items and Services Furnished by Off-Campus Provider-Based Departments of a Hospital

1. Background

When a Medicare beneficiary receives services in an off-campus department of a hospital, the total payment amount for the services made by Medicare is generally higher than the total payment amount made by Medicare when the beneficiary receives those same services in a physicians' office. Medicare pays a higher amount for services furnished to beneficiaries in the off-campus department of a hospital because it generally pays two separate claims for these services—one under the OPPS for the institutional services and one under the MPFS for the professional services furnished by a physician or other practitioner. Medicare beneficiaries are responsible for the cost-sharing liability, if any, for both of these claims, often resulting in higher total beneficiary cost-sharing than if the service had been furnished in a physician's office.

In the CY 2017 OPPS/ASC proposed rule (81 FR 45681), we discussed the provision of section 603 of the Bipartisan Budget Act of 2015 (Pub. L. 114–74), enacted on November 2, 2015, which amended section 1833(t) of the Act. Specifically, this provision amended the OPPS statute at section 1833(t) by amending paragraph (1)(B) and adding a new paragraph (21). As a general matter, under sections 1833(t)(1)(B)(v) and (t)(21) of the Act, applicable items and services furnished by certain off-campus outpatient departments of a provider on or after January 1, 2017, will not be considered covered OPD services as defined under section 1833(t)(1)(B) of the Act for purposes of payment under the OPPS and will instead be paid ''under the applicable payment system'' under Medicare Part B if the requirements for such payment are otherwise met. We note that, in order to be considered part of a hospital, an off-campus department of a hospital must meet the provider-based criteria established under 42 CFR 413.65. Accordingly, in the proposed rule and this final rule with comment period, we refer to an ''off-campus outpatient department of a provider,'' which is the term used in section 603, as an ''off-campus outpatient provider-based department'' or an ''off-campus PBD.''

As noted earlier, section 603 of Public Law 114–74 made two amendments to section 1833(t) of the Act—one amending paragraph (1)(B) and the other adding new paragraph (21). The provision amended section 1833(t)(1)(B) by adding a new clause (v), which excludes from the definition of ''covered OPD services'' applicable items and services (defined in paragraph (21)(A) of such section) that are furnished on or after January 1, 2017 by an off-campus PBD, as defined in paragraph (21)(B) of such section. The second amendment added a new paragraph (21) to section 1833(t) of the Act, which defines the terms ''applicable items and services'' and ''off-campus outpatient department of a provider,'' requires the Secretary to make payments for such applicable items and services furnished by an off-campus PBD under an applicable payment system (other than OPPS), provides that hospitals shall report on information as needed for implementation of the provision, and establishes a limitation on administrative and judicial review on certain determinations for applicable items and services, applicable payment system, and off-campus outpatient department of a provider, and information required to be reported.

In defining the term ''off-campus outpatient department of a provider,'' section 1833(t)(21)(B)(i) of the Act specifies that the term means a department of a provider (as defined at 42 CFR 413.65(a)(2) as that regulation was in effect on November 2, 2015, the

date of enactment of Pub. L. 114–74) that is not located on the campus of such provider, or within the distance from a remote location of a hospital facility. Section 1833(t)(21)(B)(ii) of the Act excepts from the definition of ''off-campus outpatient department of a provider,'' for purposes of paragraphs (1)(B)(v) and (21)(B) of such section, an off-campus PBD that was billing under section 1833(t) with respect to covered OPD services furnished prior to the date of enactment of Public Law 114–74, that is, November 2, 2015. In the CY 2017 OPPS/ASC proposed rule, we proposed to refer to this exception as providing ''excepted'' status to certain off-campus PBDs and certain items and services furnished by such excepted off-campus PBDs, which would continue to be paid under the OPPS. Moreover, because the definition of ''applicable items and services'' specifically excludes items and services furnished by a dedicated emergency department as defined at 42 CFR 489.24(b) and the definition of ''off-campus outpatient department of a provider'' does not include PBDs located on the campus of a hospital or within the distance (described in the definition of campus at 413.65(a)(2)) from a remote location of a hospital facility, the items and services furnished by these excepted off-campus PBDs on or after January 1, 2017 will continue to be paid under the OPPS.

In the CY 2017 OPPS/ASC proposed rule (81 FR 45681), we proposed to make a number of proposals to implement section 603 of Public Law 114–74. Broadly, we proposed to do three things: (1) Define applicable items and services in accordance with section 1833(t)(21)(A) of the Act for purposes of determining whether such items and services are covered OPD services under section 1833(t)(1)(B)(v) of the Act or whether payment for such items and services shall instead be made under section 1833(t)(21)(C) of the Act; (2) define off-campus PBD for purposes of sections 1833(t)(1)(B)(v) and (t)(21) of the Act; and (3) establish policies for payment for applicable items and services furnished by an off-campus PBD (nonexcepted items and services) under section 1833(t)(21)(C) of the Act. To do so, we proposed policies that would define whether certain items and services furnished by a given off-campus PBD may be considered excepted and, thus, continue to be paid under the OPPS; establish the requirements for the off-campus PBDs to maintain excepted status (both for the excepted off-campus PBD and for the items and services furnished by such excepted off-campus PBDs); and describe the applicable payment system for nonexcepted items and services. In addition, we solicited public comments on information collection requirements for implementing this provision in accordance with section 1833(t)(21)(D) of the Act.

There is no legislative history on record regarding section 603 of Public Law 114–74. However, the Congressional Budget Office estimated program savings for this provision of approximately $9.3 billion over a 10-year period. In January 2016, we posted a notice on the CMS Web site that informed stakeholders that we expected to present our proposals for implementing section 603 of Public Law 114–74 in the CY 2017 OPPS/ASC proposed rule. Because we had already received several inquiries or suggestions from stakeholders regarding implementation of the section 603 provision, we provided a dedicated email address for stakeholders to provide information they believed was relevant in formulating the proposals in the proposed rule. We stated in the proposed rule that we had considered this stakeholder feedback in developing the proposed policies.

Comment: Numerous commenters urged CMS to delay implementation of the section 603 provisions to allow the agency additional time to develop policies that would not impose undue burden on CMS and hospitals. The commenters stated that if all of the proposals related to section 603 are adopted as final without modification, hospitals may not be able to continue to provide the current level of health care necessary in their communities. Commenters who support a delay posited that the delay would provide additional time to collect data that would inform ''implementation'' of section 603. In addition, commenters stated that there is precedence for CMS to delay implementation of legislative provisions, even if the legislation includes a deadline for enactment. The commenters cited the following as examples of CMS delaying implementation of legislative provisions:

- Hospital Outpatient Prospective Payment System for 18 months, from January 1, 1999 to July 1, 2000;
- Ambulance Fee Schedule for 27 months, from January 1, 2000 to April 1, 2002; and
- Medicare Clinical Diagnostic Laboratory Tests Payment System for 12 months, from January 1, 2017 to January 1, 2018.

Response: As discussed in detail later in this final rule with comment period, we are not delaying implementation of the section 603 provisions of Public Law 114–74, and are finalizing implementation of the provisions, effective January 1, 2017, in this final rule with comment period. In addition, in an interim final rule with comment period presented under section X.B. of this document, we are establishing payment rates under the MPFS to be used by hospitals for billing for nonexcepted items and services. With respect to the comment that a delay would enable CMS to collect appropriate data; we disagree. As discussed in section X.A.3.b.(2) of this final rule with comment period and also in the interim final rule with comment period in section X.B. of this document, we are establishing a modifier for use by hospitals to bill on their claim to identify nonexcepted items and services beginning January 1, 2017. These claims-based data will prove useful for making payment for nonexcepted items and services under the MPFS beginning in January 2017 and will be helpful over time as Medicare is able to collect and analyze hospital data on nonexcepted items and services and use that information to refine payment for nonexcepted items and services. Accordingly, we do not agree with commenters that a delay is appropriate. Moreover, we note that the law requires the section 603 provisions to take effect January 1, 2017.

Comment: MedPAC commended CMS' effort to ''rigorously implement'' section 603 and further stated that if CMS finalized the proposed policies, it believed the policies would have the potential to reduce the financial burden on taxpayers and beneficiaries, although there would likely be substantial administrative burdens on the agency, its contractors and providers. Other commenters generally supported the proposed policies and believed that the proposals would reduce the incentive for hospitals to purchase physician's offices and convert them to HOPDs without changing their location or patient population.

Response: We appreciate the commenters' support. We summarize and respond to public comments on specific proposals within the appropriate sections below.

2. Defining Applicable Items and Services and an Off-Campus Outpatient Department of a Provider as Set Forth in Sections 1833(t)(21)(A) and (B) of the Act

a. Background on the Provider-Based Status Rules

Since the beginning of the Medicare program, some hospitals, which we refer

to as ''main providers,'' have functioned as a single entity while owning and operating multiple departments, locations, and facilities. Having clear criteria for provider-based status is important because this designation can result in additional Medicare payments under the OPPS for services provided at the provider-based facility and may also increase the coinsurance liability of Medicare beneficiaries receiving those services versus if those same services were furnished in a physician's office. The current criteria for provider-based status are located in the regulations at 42 CFR 413.65.

When a facility or organization has provider-based status, it is considered to be part of the hospital. The hospital as a whole, including all of its PBDs, must meet all Medicare conditions of participation and conditions of payment that apply to hospitals. In addition, a hospital bills for services furnished by its provider-based facilities and organizations using the CMS Certification Number of the hospital. One type of facility or organization that a hospital may treat as provider-based is an off-campus outpatient department. In order for the hospital to do so, the off-campus outpatient department must meet certain requirements under 42 CFR 413.65, including, but not limited to:

- It generally must be located within a 35-mile radius of the campus of the main hospital;
- Its financial operations must be fully integrated within those of the main provider;
- Its clinical services must be integrated with those of the main hospital (for example, the professional staff at the off-campus outpatient department must have clinical privileges at the main hospital, the off-campus outpatient department medical records must be integrated into a unified retrieval system (or cross reference) of the main hospital), and patients treated at the off-campus outpatient department who require further care must have full access to all services of the main hospital;
- It is held out to the public as part of the main hospital.

Section 603 of Public Law 114–74 makes certain distinctions with respect to whether a department of the hospital is ''on'' campus or ''off'' campus and also excludes from the definition of ''off-campus outpatient department of a provider'' a department of a provider within the distance from a remote location of a hospital facility. Below we provide some details on the definitions of the terms ''campus'' and ''remote locations.''

Section 413.65(a)(2) of the regulations defines a ''campus'' as ''[T]he physical area immediately adjacent to the provider's main buildings, other areas and structures that are not strictly contiguous to the main buildings but are located within 250 yards of the main buildings, and any other areas determined on an individual case basis, by the CMS Regional Office, to be part of the provider's campus.''

In developing the provider-based rules, CMS also recognized that many hospitals operated fully integrated, though geographically separate, inpatient facilities. While the initial scope of provider-based rulemaking primarily concerned situations with outpatient departments, we believed the policies set forth were equally applicable to inpatient facilities. Therefore, CMS also finalized a regulatory definition for a ''remote location of a hospital'' at 42 CFR 413.65(a)(2) as ''a facility or an organization that is either created by, or acquired by, a hospital that is a main provider for the purpose of furnishing inpatient hospital services under the name, ownership, and financial and administrative control of the main provider, in accordance with the provisions of this section. A remote location of a hospital comprises both the specific physical facility that serves as the site of services for which separate payment could be claimed under the Medicare or Medicaid program, and the personnel and equipment needed to deliver the services at that facility. The Medicare conditions of participation do not apply to a remote location of a hospital as an independent entity. For purposes of this part, the term 'remote location of a hospital' does not include a satellite facility as defined in §§ 412.22(h)(1) and 412.25(e)(1) of this chapter.''

Under the provider-based rules, we consider these inpatient ''remote locations'' to be ''off-campus,'' and CMS reiterated this position in the FY 2003 IPPS/LTCH PPS final rule (67 FR 50081 through 50082). Hospitals that comprise several sites at which both inpatient and outpatient care are furnished are required to designate one site as its ''main'' campus for purposes of the provider-based rules. Thus, any facility not located on that main campus (generally within 250 yards) is considered ''off-campus'' and must satisfy the provider-based rules in order to be treated by the main hospital as provider-based. For Medicare purposes, a hospital that wishes to add an off-campus PBD must submit an amended Medicare provider enrollment form detailing the name and location of the provider-based facility within 90 days of adding the new facility to the hospital. In addition, a hospital may ask CMS to make a determination that a facility or organization has provider-based status by submitting a voluntary attestation to its MAC, for final review by the applicable CMS Regional Office, attesting that the facility meets all applicable provider-based criteria in the regulations. If no attestation is submitted and CMS later determines that the hospital treated a facility or organization as provider-based when the facility or organization did not meet the requirements for provider-based status, CMS will recover the difference between the amount of payments actually made to the hospital and the amount of payments that CMS estimates should have been made for items and services furnished at the facility in the absence of compliance with the provider-based requirements for all cost reporting periods subject to reopening. However, if the hospital submits a complete attestation of compliance with the provider-based status requirement for a facility or organization that has not previously been found by CMS to have been inappropriately treated as provider based, but CMS subsequently determines that the facility or organization does not meet the requirements for provider-based status, CMS will recover the difference between the amount of payments actually made to the hospital since the date the attestation was submitted and the amount of payments that CMS estimates should have been made in the absence of compliance with the provider-based requirements.

Historically, PBDs billed as part of the hospital and could not be distinguished from the main hospital or other PBDs within the claims data. In CY 2015 OPPS/ASC final rule with comment period (79 FR 66910 through 66914), CMS adopted a voluntary claim modifier ''PO'' to identify services furnished in off-campus PBDs (other than emergency departments, remote locations and satellite locations of the hospital) to collect data that will help identify the type and costs of services typically furnished in off-campus PBDs. Based on the provision in the CY 2015 OPPS/ASC final rule with comment period, use of this modifier became mandatory beginning in CY 2016. While the modifier identifies that the service was provided in an off-campus PBD, it does not identify the type of off-campus PBD in which services were furnished, nor does it distinguish between multiple off-campus PBDs of the same hospital. As discussed in section X.A.2.e. of this

final rule with comment period, in the CY 2017 OPPS/ASC proposed rule, we solicited public comments on the type of information that would be needed to identify nonexcepted off-campus PBDs for purposes of section 603, although we did not propose to collect such information for CY 2017.

b. Exemption of Items and Services Furnished in a Dedicated Emergency Department or by an Off-Campus PBD as Defined at Sections 1833(t)(21)(B)(i)(I) and (II) of the Act (Excepted Off-Campus PBD)

(1) Dedicated Emergency Departments (EDs)

Section 1833(t)(21)(A) of the Act specifies that, for purposes of paragraph (1)(B)(v) and this paragraph 21 of section 1833(t), the term ''applicable items and services'' means items and services *other* than items and services furnished by a dedicated emergency department (as defined in 42 CFR 489.24(b)). Existing regulations at § 489.24(b) define an ED as any department or facility of the hospital, regardless of whether it is located on or off the main hospital campus, that meets at least one of the following requirements:

- It is licensed by the State in which it is located under applicable State law as an emergency room or emergency department;
- It is held out to the public (by name, posted signs, advertising, or other means) as a place that provides care for emergency medical conditions on an urgent basis without requiring a previously scheduled appointment; or
- During the calendar year immediately preceding the calendar year in which a determination under this section is being made, based on a representative sample of patient visits that occurred during that calendar year, it provides at least one-third of all of its outpatient visits for the treatment of emergency medical conditions on an urgent basis without requiring a previously scheduled appointment.

Accordingly, based on existing regulations, an ED may furnish both emergency and nonemergency services as long as the requirements under § 489.24(b) are met. In accordance with section 1833(t)(21)(A) of the Act and regulations at § 489.24(b), in the CY 2017 OPPS/ASC proposed rule (81 FR 45683), we proposed that all services furnished in an ED, whether or not they are emergency services, would be exempt from application of sections 1833(t)(1)(B)(v) and 1833(t)(21) of the Act, and thus continue to be paid under the OPPS. Moreover, we proposed to define ''applicable items and services'' to which sections 1833(t)(1)(B)(v) and (t)(21)(A) of the Act apply to include all items and services not furnished by an ED as described in the regulations at 42 CFR 489.24(b).

Comment: Many commenters supported CMS' proposal to exempt application of the section 603 payment provisions to EDs. These commenters stated that CMS correctly interpreted the statutory provisions and agreed with the CMS proposal to exclude all services, emergency and nonemergency, furnished in a dedicated ED of a hospital.

Response: We appreciate the commenters' support.

After consideration of the public comments we received, we are adopting as final, without modification, our proposal to exempt all items and services (emergency and nonemergency) furnished in an ED from the provisions of section 603, as long as the department maintains its status as an ED under the regulation at § 489.24(b).

(2) On-Campus Locations

As noted earlier, section 1833(t)(21)(B)(i) of the Act defines the term ''off-campus outpatient department of a provider'' for purposes of paragraphs (1)(B)(v) and (21) of such section as a department of a provider (as defined at 42 CFR 413.65(a)(2) *as that term is in effect as of* the date of enactment of Public Law 114–74), that is not located on the campus of that provider or within the distance (described in the definition of campus at § 413.65(a)(2)) from a remote location of a hospital facility (as defined in § 413.65(a)(2)). We stated in the CY 2017 OPPS/ASC proposed rule that we believe the statutory language refers to such departments as defined by the regulations at § 413.65 as they existed as of the date of enactment of Public Law 114–74, which was November 2, 2015. The existing regulatory definition at § 413.65(a)(2) of a ''department of a provider'' includes both the specific physical facility that serves as the site of services of a type for which payment could be claimed under the Medicare or Medicaid program, and the personnel and equipment needed to deliver the services at that facility. We used the existing regulatory definition of a department of a provider as a guide in designing our proposals to implement section 603 of Public Law 114–74.

In the proposed rule, we did not propose to change the existing definition of ''campus'' located at § 413.65(a)(2) of our regulations. We stated that we believe hospitals can adequately determine whether their departments are on-campus, including by using the current provider-based attestation process described in § 413.65(b) to affirm their on-campus status. Currently, the CMS Regional Offices review provider-based attestations to determine whether a facility is within full compliance of the provider-based rules, and hospitals that ask for a provider-based determination are required to specify whether they are seeking provider-based status for an on-campus or off-campus facility or organization. If a CMS Regional Office determines that a department is not in full compliance with the provider-based rules, hospitals may utilize the reconsideration process described under § 413.65(j) and the administrative appeal process described at 42 CFR part 498.

In accordance with section 1833(t)(21)(B)(i)(I) of the Act, in the CY 2017 OPPS/ASC proposed rule (81 FR 45683), we proposed that on-campus PBDs and the items and services provided by such a department would be excepted from application of sections 1833(t)(1)(B)(v) and (t)(21) of the Act.

Comment: Several commenters supported the decision by CMS to not modify existing provider-based regulations. They stated that it is advisable to continue to use the current definition of facilities that are considered to be on-campus versus off-campus, including the use of both the 250 yards rule, as well as allowing the CMS Regional Offices to continue to provide case-specific discretion for making such determinations. Other commenters requested revisions to the definitions at § 413.65(a)(2). Many of these commenters suggested using a ''reasonable proximity'' test for ''campus'' or to emphasize the ability of CMS Regional Offices to allow for expanded campuses. Other commenters requested that certain types of providers be exempted from the general 250 yard limitation. Some commenters requested that CMS remove the Regional Office's discretion and not consider any location outside the 250 yard radius as part of a campus. Several commenters requested that CMS provide additional subregulatory guidance concerning the existing definition of ''campus'' and ''main building.''

Response: We continue to believe that the current regulatory definition of campus at § 413.65(a)(2), including the ability for the CMS Regional Offices to exercise discretion, allows a flexible and realistic approach to the configurations a hospital may adopt. Because we did not propose any changes to the existing definition of ''campus,'' we are not changing the definition at this time.

While implementation of the provisions of section 603 has added significantly more focus and attention on provider-based criteria, we note that the CMS Regional Offices have been making on-campus and off-campus provider-based determinations for many years, with relatively few instances where there has not been consensus as to whether a facility was on-campus or off-campus. As we gain experience with the implementation of section 603, our preference is to make any necessary adjustments to provider-based policies at § 413.65 through separate notice-and-comment rulemaking.

After consideration of the public comments we received, we are finalizing the proposed policy that on-campus PBDs and the items and services provided by such departments would be excepted from application of sections 1833(t)(1)(B)(v) and (t)(21) of the Act.

(3) Within the Distance From Remote Locations

In addition to the statutory exception for PBDs located on the campus of a provider, section 1833(t)(21)(B)(i)(II) of the Act excludes off-campus PBDs that are not located within the distance (as described in the definition of campus at § 413.65(a)(2)) from a ''remote location'' (as also defined at § 413.65(a)(2)) of a hospital facility. The ''distance'' described in the definition of ''campus'' at § 413.65(a)(2) is 250 yards. While hospitals that operate remote locations are referred to as ''multi-campus'' hospitals, as discussed previously, under current provider-based rules, a hospital is not allowed to have more than one single ''main'' campus for each hospital. Therefore, in the CY 2017 OPPS/ASC proposed rule (81 FR 45683 through 45684), when determining whether an off-campus PBD meets the exception set forth at section 1833(t)(21)(B)(i)(II) of the Act, we proposed that the off-campus PBD must be located at or within the distance of 250 yards from a remote location of a hospital facility. We stated that hospitals should use surveyor reports or other appropriate documentation to ensure that their off-campus PBDs are within 250 yards (straight-line) from any point of a remote location for this purpose.

Comment: A number of commenters requested specific clarifications of remote-location definitions. In particular, the commenters requested that CMS better define the exact methodology a hospital should use to determine the 250 yard criterion. Commenters also requested verification that if any portion of an outpatient facility is within 250 yards of the remote location, the entire facility can be considered excepted from section 603 payment implications.

Response: We note that all remote locations of a hospital, as well as any nearby outpatient departments, continue to be considered as ''off-campus'' under regulations at § 413.65. A remote location is not a ''campus'' as that term is currently defined in § 413.65, and we did not propose any changes to the definitions in § 413.65. Therefore, as stated in the proposed rule, we interpreted the distance (described in such definition of campus) from a remote location of a hospital facility (as defined in § 413.65(a)(2)) to be 250 yards. Because neither section 1833(t)(21)(B)(i)(II) of the Act, as added by section 603 of Public Law 114–74, nor the provider-based regulations specify the specific point from which to measure (for example, the main entrance), we interpret this to mean that a hospital may measure 250 yards from any point of the physical facility that serves as the site of services of the remote location to any point in the PBD. We believe this implementation is consistent with how CMS has historically implemented the 250-yard criterion when making on-campus determinations under § 413.65.

After consideration of the public comments we received, we are finalizing the policy as proposed. Off-campus PBDs that are located at or within 250 yards of a remote location of a hospital facility, as defined in § 413.65(a)(2), will be excepted from application of sections 1833(t)(1)(B)(v) and (t)(21) of the Act.

c. Applicability of Exception at Section 1833(t)(21)(B)(ii) of the Act

Section 1833(t)(21)(B)(ii) of the Act states that, for purposes of sections 1833(t)(1)(B)(v) and 1833(t)(21) of the Act, the term ''off-campus outpatient department of a provider'' shall not include a department of a provider (that is, an off-campus PBD) (as so defined) that was billing under this subsection, that is, the OPPS, with respect to covered OPD services furnished prior to November 2, 2015. In the CY 2017 OPPS/ASC proposed rule (81 FR 45684), we proposed that, as provided in section 1833(t)(21)(B)(ii) of the Act, if an off-campus PBD meets this exception, sections 1833(t)(1)(B)(v) and 1833(t)(21) of the Act do not apply to that department or to the types of items and services furnished by that department (discussed in greater detail below) that were being billed under the OPPS prior to November 2, 2015.

A major concern with determining the scope of the exception set forth at section 1833(t)(21)(B)(ii) of the Act for purposes of applying sections 1833(t)(1)(B)(v) and 1833(t)(21) of the Act is determining how relocation of the physical location or expansion of services lines furnished at the ''excepted'' off-campus PBD affects the excepted status of the off-campus PBD itself and the items and services furnished by that excepted off-campus PBD.

In the proposed rule, we noted that we had heard from some providers that they believe that section 1833(t)(21)(B)(ii) of the Act specifically excepted off-campus PBDs billing for covered OPD services furnished before November 2, 2015, and that these excepted departments should remain excepted, regardless of whether they relocate or expand services, or both. These providers noted that the exception for certain off-campus PBDs states that section 1833(t)(21)(B)(ii) of the Act does not include an off-campus PBD (as so defined) that was billing under this subsection with respect to covered OPD services furnished prior to the date of the enactment of this paragraph. These providers argued that, because the statute does not include a specific limitation on relocation or expansion of services, no limitation should be applied.

We also noted that providers also suggested that off-campus PBDs should be able to relocate and maintain excepted status as long as the structure of the PBD is substantially similar to the PBD prior to the relocation and that some stakeholders have suggested that the criteria for defining substantially similar could be based on maintaining similar personnel, space, patient population, or equipment, or a combination of these factors. In the proposed rule, we stated our belief that section 1833(t)(21)(B)(ii) of the Act excepted off-campus PBDs as they existed at the time that Public Law 114–74 was enacted, including those items and services furnished and billed by such a PBD prior to that time. Thus, as noted above, we developed our proposals in defining the scope of the excepted off-campus PBD and the items and services it furnishes based on the existing regulatory definition of department of a provider, which speaks to both the specific physical facility that serves as the site of services of a type for which payment could be claimed under the Medicare or Medicaid program and the personnel and equipment needed to deliver the services at that facility.

Below we discuss the proposals we made in the proposed rule regarding the scope of the exception at section 1833(t)(21)(B)(ii) of the Act for purposes of applying sections 1833(t)(1)(B)(v) and (t)(21) of the Act.

(1) Relocation of Off-Campus PBDs Excepted Under Section 1833(t)(21)(B)(ii) of the Act

In the proposed rule, we stated that in considering how relocation of an excepted off-campus PBD could affect application of sections 1833(t)(1)(B)(v) and (t)(21) of the Act, we were concerned that if we proposed to permit excepted off-campus PBDs to relocate and continue such status, hospitals would be able to relocate excepted off-campus PBDs to larger facilities, purchase additional physician practices, move these practices into the larger relocated facilities, and receive OPPS payment for services furnished by these physicians, which we believe section 603 of Public Law 114–74 intended to preclude.

As stated in the proposed rule, we believe that section 603 of Public Law 114–74 applies to off-campus PBDs as they existed at the time of enactment and excepts those items and services that were being furnished and billed by off-campus PBDs prior to November 2, 2015.

After reviewing the statutory authority, and the concerns noted earlier, we proposed that, for purposes of paragraphs (1)(B)(v) and (21) of section 1833(t) of the Act, excepted off-campus PBDs and the items and services that are furnished by such departments would no longer be excepted if the excepted off-campus PBD moves or relocates from the physical address that was listed on the provider's hospital enrollment form as of November 1, 2015. In the case of addresses with multiple units, such as a multi-office building, the unit number is considered part of the address; in other words, an excepted hospital PBD could not purchase and expand into other units in its building, and remain excepted under our proposal. Once an excepted off-campus PBD has relocated, we proposed that both the off-campus PBD itself and the items and services provided at that off-campus PBD would no longer be excepted, and instead, would be subject to paragraphs (1)(B)(v) and (21) of section 1833(t) of the Act.

In the proposed rule, we noted that hospitals had expressed concern that there may be instances when an excepted off-campus PBD may need to relocate, including, for example, to meet Federal or State requirements, or due a natural disaster. We recognize that there may be circumstances beyond the hospital's control where an excepted off-campus PBD must move from the location in which it existed prior to November 2, 2015. In the CY 2017 OPPS/ASC proposed rule, we solicited public comments on whether we should develop a clearly defined, limited relocation exception process, similar to the disaster/extraordinary circumstance exception process under the Hospital VBP program (as implemented in the FY 2014 IPPS/LTCH PPS final rule; 78 FR 50704) for hospitals struck by a natural disaster or experiencing extraordinary circumstances that would allow off-campus PBDs to relocate in very limited situations, and that would mitigate the potential for the hospital to avoid application of sections 1833(t)(1)(B)(v), and (t)(21)(C) of the Act. In addition, we sought public comments on whether we should consider exceptions for any other circumstances that are completely beyond the control of the hospital, and, if so, what those specific circumstances would be.

Comment: Numerous commenters opposed CMS' proposal to limit excepted off-campus PBDs to the physical address on the provider's hospital enrollment form as of November 1, 2015. The commenters stated that a PBD that moves or relocates from its physical address after November 2, 2015, should not lose its excepted status, given the many circumstances that may necessitate a hospital to move or relocate, temporarily or permanently, such as lease expiration, building safety code compliance, building deterioration, population shifts, natural disaster, seismic requirements, and other situations beyond a hospital's control. Many commenters stated that CMS' proposal is overly restrictive and that CMS does not have the authority to apply payment reductions to hospitals that move or relocate because section 603 does not explicitly discuss or address relocation. These commenters believed that Congress intended the section 603 provisions to apply to new off-campus PBDs and not to relocation of existing off-campus PBDs. The commenters requested that CMS allow flexibility such that excepted off-campus PBDs could move or relocate for any reason without jeopardizing payment under the OPPS. Several commenters opposed CMS' consideration of a disaster/extraordinary circumstance exception process similar to the Hospital VBP Program because they believed excepted off-campus PBDs should be allowed to relocate for any reason without permission or approval from CMS.

Some commenters were opposed to the relocation proposal and suggested that, if CMS moves forward with adopting a limitation on relocation of existing PBDs, CMS clearly define relocation exceptions. In particular, the commenters recommended that CMS allow excepted PBDs to relocate without the loss of excepted status under the following circumstances:

- Relocation to comply with Federal and State requirements;
- Relocation of an HOPD that has been destroyed or substantially damaged in a disaster or emergency;
- Temporary relocation of an HOPD in order to allow rebuilding, updating or retrofitting of its infrastructure;
- Relocation due to the HOPD losing its lease;
- Relocating a HOPD in order to provide access to care in an underserved area; and
- Relocation due to a shifting/growing patient population.

Response: We disagree that, in the context of section 603, an off-campus PBD should be allowed to relocate for any reason and continue to be paid under the OPPS. In the proposed rule, we cited our concern that without limitations on relocation, hospitals would be able to relocate excepted off-campus PBDs to larger facilities, purchase additional physician practices, and move these practices into the larger relocated facilities that would continue to be paid under the OPPS.

As previously stated, we believe that section 603 applies to off-campus PBDs as they existed at the time the law was enacted. That is, we believe that the statutory language provides for payment to continue under the OPPS for such departments as defined by the regulations at § 413.65 as they existed at the time of enactment of Public Law 114–74. The existing regulatory definition at § 413.65 of a ''department of a provider'' includes both the specific physical facility that serves as the site of services of a type for which payment could be claimed under the Medicare or Medicaid program, and the personnel and equipment needed to deliver the services at that facility. To allow excepted off-campus PBDs to relocate under *every* circumstance and continue to be paid OPPS rates would allow hospitals to continue the practices we believe section 603 was intended to curb. Allowing unlimited relocation of an off-campus PBD would potentially result in relocation to larger facilities, with different equipment and staff and unbridled expansion of service lines. Among other changes, its composition

could result in an off-campus PBD that is remarkably different than it was prior to November 2, 2015, the date of enactment of Public Law 114–74.

With respect to exercising flexibility in interpreting the statute, we are adopting an exceptions process to our relocation proposal that is limited to extraordinary circumstances outside a hospital's control, which is described later in this section. We believe that this final policy adds some additional flexibility from what we proposed, which was excepted off-campus PBDs and the items and services that are furnished by such departments would no longer be excepted if the excepted off-campus PBD moves or relocates from the physical address that was listed on the provider's hospital enrollment form as of November 1, 2015. In addition, with respect to the comment about defining criteria under which exceptions for relocation might be made, we note that it is not feasible to establish criteria that would apply to every type of extraordinary circumstance that may arise. Accordingly, we believe providing an exhaustive list of scenarios for which relocation is necessary would be contrary to the notion of added flexibility.

Comment: Several commenters suggested two alternatives to CMS' relocation proposal that would grant more flexibility to hospitals that may need to relocate for reasons seen and unforeseen. One suggested alternative was to allow relocation so long as the total number of off-campus PBDs for a hospital did not increase relative to the number prior to enactment of section 603. A second suggested alternative was that CMS develop a ''substantially similar'' test to determine if a relocated location is actually new. Commenters suggested that the substantially similar test could be similar to the critical access hospital (CAH) relocation requirements as defined in regulations at 42 CFR 485.610(d).

Response: We appreciate the commenters' feedback. As discussed earlier in section X.A.1. of this final rule with comment period, we believe that one of the primary goals of section 603 of Public Law 114–74 is to remove the difference in payment for outpatient services furnished in freestanding facilities and nonexcepted off-campus PBDs. Also, in the proposed rule, we stated our concern with establishing relocation policies that could result in an unintentional loophole and therefore undermine what we believe is the intent of the law. We disagree with the commenters' recommendation to allow relocation based on CAH relocation requirements because it could allow fairly unlimited relocation and expansion as long as 75 percent of the services/staff continue to be present in the expanded service area. In addition, this recommendation has significant operational and enforcement challenges and would require significant administrative resources to evaluate exception requests, including data analysis to ensure criteria are met. Likewise, while ''capping and freezing'' the total number of off-campus PBDs a hospital could have to the number of off-campus PBDs the hospital had prior to enactment of section 603 would limit the total number of off-campus PBDs to those that existed prior to enactment, we believe it would not address the previously stated concerns that a hospital could use relocation to expand to a new type of department that furnishes a higher volume and a wider variety of services with staff, personnel, and equipment that the off-campus PBD that was billing prior to enactment of section 603 previously did not have. Therefore, we do not agree with either suggestion.

Comment: Several commenters and MedPAC supported CMS' relocation proposal but recommended that CMS allow excepted off-campus PBDs to relocate for acts of nature, either temporarily or permanently, without loss of excepted status.

Response: We appreciate the commenters' support and agree that excepted off-campus PBDs should be permitted to relocate for extraordinary circumstances outside their control, such as natural disasters, significant seismic building codes, or significant public health and public safety issues, without loss of excepted status. Accordingly, we are adopting a policy in this final rule with comment period to allow an excepted off-campus PBD to relocate in the limited instances of extraordinary circumstances outside of the hospital's control, such as natural disasters, significant seismic building code requirements, or significant public health and public safety issues, that necessitate moving to a new building (either temporarily or permanently) without losing its excepted status. Exceptions to the relocation policy will be evaluated on a case-by-case basis by the appropriate CMS Regional Office. We note that such exceptions will be both limited and rare because we do not wish to allow this extraordinary circumstances exception to undermine the goal of limiting the growth and expansion of excepted off-campus PBDs. We intend to issue subregulatory guidance on the extraordinary circumstances process. Technical details will be addressed in that guidance.

Comment: Some commenters raised the question of whether an on-campus PBD that was billing under the OPPS prior to November 2, 2015, would maintain excepted status if the PBD moved off-campus after the date of enactment of Public Law 114–74.

Response: In this scenario, an on-campus PBD that relocates off-campus would be subject to sections 1833(t)(1)(B)(v) and (t)(21) of the Act in CY 2017 and subsequent years. We believe that section 603 applies to off-campus PBDs as they existed at the time the law was enacted. Therefore, while an on-campus PBD as of November 2, 2015 would be treated as an excepted off-campus PBD, the subsequent relocation of that PBD off-campus would result in the PBD no longer being paid under the OPPS.

Comment: Several commenters recommended that, if CMS were to adopt a relocation exceptions process, the process to obtain an exception be administratively simple and timely. Specifically, the commenters suggested two approaches to establishing a relocation exceptions process: First, CMS could modify the Medicare 855 enrollment form and the online Medicare Provider Enrollment, Chain, and Ownership System (PECOS) so that the hospital would notify CMS of the reason for a relocation of an excepted off-campus PBD by choosing among the list of preapproved exceptions. Second, CMS Regional Offices could have discretionary authority to approve additional relocation exceptions for excepted off-campus PBDs in other reasonable, but unforeseen, circumstance.

Response: We agree that the relocation exceptions process should be as administratively simple as possible. As mentioned earlier, the appropriate CMS Regional Office will evaluate relocation requests on a case-by-case basis. We will take these comments into consideration prior to issuing subregulatory technical guidance.

After consideration of the public comments received, we are finalizing our proposed policy on relocation, with modification to allow excepted off-campus PBDs to relocate temporarily or permanently, without loss of excepted status, for extraordinary circumstances outside of the hospital's control, such as natural disasters, significant seismic building code requirements, or significant public health and public safety issues. This policy is intended to be applied in a limited and rare manner to ensure that excepted off-campus PBDs do not leverage these

requirements to subvert the intent of section 603. CMS Regional Offices will evaluate and approve or deny these relocation requests. We will provide instruction through subregulatory guidance on the process to request a relocation exception. CMS Regional Offices will make determinations for relocation exception requests.

(2) Expansion of Clinical Family of Services at an Off-Campus PBD Excepted Under Section 1833(t)(21)(B)(ii) of the Act

In the CY 2017 OPPS/ASC proposed rule, we noted that we had received questions from some hospitals regarding whether an excepted off-campus PBD can expand the number or type of services the department furnishes and maintain excepted status for purposes of paragraphs (1)(B)(v) and (21) of section 1833(t) of the Act. As mentioned earlier in the relocation discussion, we have heard that some providers believe that section 1833(t)(21)(B)(ii) of the Act specifically excepted *departments*, and that excepted departments should remain excepted, regardless of whether these departments expand either the number of services or the types of services they provide. Under this interpretation, section 1833(t)(21)(B)(ii) of the Act would limit only the number of excepted off-campus PBDs a hospital can have to the number of off-campus PBDs that were billing Medicare for covered OPD services furnished prior to enactment of Public Law 114–74.

In the proposed rule, we stated that we believe section 1833(t)(21)(B)(ii) of the Act excepts off-campus PBDs and the items and services that are furnished by such excepted off-campus PBDs for purposes of paragraphs (1)(B)(v) and (21) of section 1833(t) of the Act as they were being furnished on the date of enactment of section 603 of Public Law 114–74, as guided by our regulatory definition at § 413.65(a)(2) of a department of a provider. Thus, we proposed that the excepted off-campus PBD items and services that would continue to be paid under the OPPS would be limited to the provision of items and services it was furnishing prior to the date of enactment of section 603 of Public Law 114–74 only. Moreover, we proposed that items and services that are not part of a clinical family of services furnished and billed by the excepted off-campus PBD prior to November 2, 2015 would be subject to paragraphs (1)(B)(v) and (21) of section 1833(t) of the Act, that is, not payable under the OPPS.

As noted earlier, we believe that the amendments to section 1833(t) of the Act by section 603 of Public Law 114–74 were intended to address items and services furnished at physicians' offices that are converted to hospital off-campus PBDs on or after November 2, 2015 from being paid at OPPS rates. One issue we contemplated in considering how expanded services should affect excepted status is how it could affect payment to newly acquired physicians' offices or new off-campus PBDs established *after* the date of enactment of section 603. In the proposed rule, we indicated that we were concerned that if excepted off-campus PBDs could expand the types of services provided at the excepted off-campus PBDs and also be paid OPPS rates for these new types of services, hospitals may be able to purchase additional physician practices and add those physicians to existing excepted off-campus PBDs. This could result in newly purchased physician practices furnishing services that are paid at OPPS rates, which we believe these amendments to section 1833(t) of the Act are intended to address.

After reviewing the statutory authority and the concerns raised by commenters noted above, we proposed, for purposes of paragraphs (1)(B)(v) and (21) of section 1833(t) of the Act, that excepted status of items and services furnished in excepted off-campus PBDs is limited to the items and services (defined as clinical families of services in Table 21 of the proposed rule (81 FR 45685 through 45686)) such a department was billing for under the OPPS and were furnished prior to November 2, 2015. We proposed that if an excepted off-campus PBD furnishes services from a clinical family of services that it did not furnish prior to November 2, 2015, and thus did not also bill for, these new or expanded clinical families of services would not be covered OPD services, and instead would be subject to paragraphs (1)(B)(v) and (21) of section 1833(t) of the Act as described in section X.A.1.c. of the proposed rule. We note that we proposed not to limit the volume of excepted items and services within a clinical family of services that an excepted off-campus PBD could furnish.

In summary, our proposals related to expansion of clinical families of services are as follows: We proposed that service types be defined by the 19 clinical families of hospital outpatient service types described in Table 21 of the proposed rule (81 FR 45685 through 45686). Moreover, we proposed that if an excepted off-campus PBD furnished and billed for any specific service within a clinical family of services prior to November 2, 2015, such clinical family of services would be excepted and be eligible to receive payment under the OPPS. However, we proposed that if an excepted off-campus PBD furnishes services from a clinical family of services that such department did not furnish and bill for prior to November 2, 2015, those services would be subject to sections 1833(t)(1)(B)(v) and (t)(21) of the Act in CY 2017 and subsequent years. We referred readers to Addendum B to the proposed rule (which is available via the Internet on the CMS Web site) for which HCPCS codes mapped to each clinical family of services. We stated that if we added a new HCPCS code or APC in future years, we would provide mapping to these clinical families of services, where relevant.

In addition, we considered, but did not propose, to specify a specific timeframe in which service lines had to be billed under the OPPS for covered OPD services furnished prior to November 2, 2015. We sought public comment on whether we should adopt a specific timeframe for which the billing had to occur, such as CY 2013 through November 1, 2015.

Under our proposal, while excepted off-campus PBDs would not be eligible to receive OPPS payments for expanded clinical families of services, such excepted off-campus PBDs would continue to be eligible to receive OPPS payment for clinical families of services that were furnished and billed prior to that date. We discuss later in this section how we proposed to pay for expanded items and services that are furnished at excepted off-campus PBDs, that is, are nonexcepted items and services.

We sought public comments on these proposals. In addition, we sought public comments on our proposed categories of clinical families of services, and our proposal not to limit the volume of services furnished within a clinical family of services that the hospital was billing prior to November 2, 2015.

Comment: A large number of commenters opposed CMS' proposals related to service expansion. The commonly cited concerns among the commenters who opposed the proposed policy were as follows:

- The statutory language included in section 603 does not address changes in service-mix by excepted off-campus PBDs. These commenters stated that CMS exceeded its authority to state that Congress established both excepted facilities and excepted items and services that those facilities may provide.
- Limitations on service line expansion does not reflect that health care is ever evolving and new therapies and services may be developed that do

not fit squarely in the proposed clinical families. Commenters stated that CMS' proposal would hinder beneficiary access to innovative technologies if an excepted off-campus PBD is penalized financially for keeping up with the practice of medicine.

• The term ''clinical families of service'' appears to be a new term created by CMS for the purpose of implementing section 603. Commenters expressed concern that, because the clinical families are defined by APC groupings, it would be difficult for CMS and hospitals to manage changes in the composition of APCs and HCPCS code changes contained in those APCs.

• Operational challenges and administrative burden seem significant for both CMS and hospitals. Commenters believed that CMS' proposal is unnecessarily complex and will create challenges for CMS to operationalize, track, manage, and enforce particularly because hospitals do not report or attest to the types of services furnished at each off-campus PBD.

In addition, MedPAC recommended an alternative approach that it suggested would also meet the intent of section 603 by minimizing the incentive of hospitals to purchase independent physician practices and convert them to off-campus PBDs. MedPAC recommended that CMS establish a baseline service volume for each applicable off-campus PBD and cap services, regardless of clinical family, at that limit. When the hospital reaches the annual cap for that location, CMS would no longer pay OPPS rates for those services. The annual cap could be updated based on the annual updates to the OPPS payment rates. However, MedPAC noted that, in order for CMS to implement this approach, CMS would have to collect information on OPPS payments to each excepted off-campus PBD from November 2, 2014 through November 1, 2015 to establish a baseline.

Response: We appreciate the detailed comments that were submitted. We disagree that section 603 does not provide us the authority to adopt a policy that would limit OPPS payment to the type of services that had been furnished and billed at an off-campus PBD prior to enactment of Public Law 114–74. Further, we believe the statute gives us the authority to limit the volume of services furnished to the level that was furnished prior to the date of enactment; however, we did not propose to do so. However, we are interested in feedback from stakeholders in this final rule with comment period about how such a policy would work, and we intend to monitor for potential shifting of services to excepted off-campus PBDs, including on-campus PBDs. As mentioned in the proposed rule, we were concerned that if excepted off-campus PBDs could expand the types of services provided at the excepted off-campus PBDs and also be paid OPPS rates for these new types of services, hospitals may be able to purchase additional physician practices and add those physicians to existing excepted off-campus PBDs. This could result in newly purchased physician practices furnishing services that are paid at OPPS rates, which we believe these amendments to section 1833(t) of the Act are intended to prevent. Nonetheless, we agree with commenters, including MedPAC, that our proposed policy could be operationally complex and could pose an administrative burden to hospitals, CMS, and our contractors to identify, track, and monitor billing for clinical services. Further, we believe that the relocation policy for excepted off-campus PBDs, when coupled with the final service expansion policy we are adopting in this final rule with comment period, will help ensure that off-campus PBDs excepted from application of sections 1833(t)(1)(B)(v) and (t)(21) of the Act will not be able to circumvent applicability of payment under section 1833(t)(21) of the Act. In response to the comments about the need to allow services to evolve over time to meet community needs, we recognize that community needs may evolve over time. However, to the extent that the community needs are of the service type that could be furnished by either a hospital or a different provider supplier type, we do not believe that our proposed policy would have hindered access to needed services in the community. Accordingly, we are not finalizing this proposal at this time. However, we intend to monitor service line growth and, if appropriate, may propose to adopt a limitation on the expansion of services or service lines in future rulemaking. In that event, we will consider the commenters' concerns expressed in comments received on the proposed clinical families of service in development of any future rulemaking on service expansion.

After consideration of the public comments we received, we are not finalizing our proposed policy to limit service line expansion. Therefore, an excepted off-campus PBD will receive payments under the OPPS for all billed items and services, regardless of whether it furnished such items and services prior to the date of enactment of Public Law 114–74, as long as the excepted off-campus PBD remains excepted; that is, it meets the relocation and change of ownership requirements adopted in this final rule with comment period. As mentioned earlier in this section, we intend to monitor this issue and continue to consider how a potential limitation on expansion would work. To that end, we would appreciate receiving feedback from stakeholders on how either a limitation on volume of services, as MedPAC described in its comments, or a limitation on lines of service, as we laid out in the proposed rule, would work in practice. Specifically, we are interested in what data are currently available or could be collected that would allow us to implement a limitation on service expansion. We also are interested in suggestions for changes to the clinical families of services that we set forth in Table 21 of the proposed rule as we move forward (81 FR 45685 through 45686).

(3) Other Related Public Comments

Comment: A few commenters requested clarification on whether the section 603 provisions apply to Federally Qualified Health Centers (FQHCs) that meet provider-based criteria set forth in 42 CFR 413.65(n) and are paid under the OPPS. In addition, the commenters stated that even if the section 603 policies would apply, CMS has the authority to exempt FQHCs from policies related to implementation of section 603 using equitable adjustment authority as defined in section 1833(t)(2)(E) of the Act. Commenters requested that CMS invoke the equitable adjustment authority and continue to pay FQHCS that meet the criteria at § 413.65(n) under the OPPS in spite of the section 603 provisions.

Response: Section 603 of Public Law 114–74 generally provides that applicable items and services furnished by certain off-campus outpatient departments of a provider on or after January 1, 2017, will not be considered covered OPD services as defined under section 1833(t)(1)(B) of the Act for purposes of payment under the OPPS and will instead be paid ''under the applicable payment system'' under Medicare Part B if the requirements for such payment are otherwise met.

Under existing regulations at 42 CFR 413.65(n), a FQHC or FQHC look-alike facility that has, since April 7, 1995, furnished only services that were billed as if they had been furnished by a department of a provider will continue to be treated, for purposes of the provider-based regulations, as a

department of a provider without regard to whether it complies with the criteria for provider-based status, as long as it was qualified as an FQHC (not including tribal/Indian facilities which are subject to 413.65(m)) or FQHC look-alike on or before April 7, 2000. (An ''FQHC look-alike'' is an organization that has been identified by HRSA as meeting the definition of ''Health Center'' under section 330 of the PHS Act, but does not receive grant funding under section 330.)

Section 603 does not apply to FQHCs that are paid under the FQHC Prospective Payment System methodology at section 1834(k) of the Act. However, section 603 provisions would apply to any entity that is paid under section 1833(t), including a provider-based FQHC under § 413.65(n), because a provider-based FQHC is considered a department of a provider under the OPPS.

The commenter mentioned section 1833(t)(2)(E) of the Act, which provides that the Secretary shall establish, in a budget neutral manner, other adjustments under the OPPS as determined to be necessary to ensure equitable payments. In other words, section 1833(t)(2)(E) of the Act provides the authority to make a payment adjustment under the OPPS. While section 1833(t)(2)(E) of the Act does provide fairly broad authority to make such a payment adjustment, we do not believe this authority extends to exempting a class of off-campus PBDs from application of a separate statutory provision that specifically prohibits payment under the OPPS itself; that is, there would be no OPPS payment to which a payment adjustment could be made.

Comment: Several commenters requested clarification on whether the section 603 provisions apply to off-campus PBDs of hospitals operated by the Indian Health Service (IHS) or by a tribe or tribal organization.

Response: Hospitals that are operated by the IHS, tribes, or tribal organizations are paid under section 1880 of the Act. As mentioned, section 603 of Public Law 114–74 amended sections 1833(t)(l)(B) and (t)(21) of the Act and only applies to those entities paid under section 1833(t) of the Act. Section 603 does not change payment to the IHS, tribes, and tribal organization eligible for payment under section 1880 of the Act.

Comment: Numerous commenters acknowledged that the CY 2017 OPPS/ASC proposed rule did not include a proposal for the treatment of off-campus PBDs mid-build or under development at the time Public Law 114–74 was enacted on November 2, 2015. Commenters contended that PBDs under construction or in the development phase could not have reasonably foreseen the restrictions put in place by section 603. The commenters further believed that, in the absence of reasonable knowledge or notice that such restrictions would ever be put in place at the time plans were completed for and construction begun on the new off-campus departments, these facilities will be inadvertently disadvantaged financially because they will not be paid under the OPPS. As such, commenters requested that CMS either delay implementation of section 603 to allow Congress time to pass H.R. 5273—Helping Hospitals Improve Patient Care Act of 2016 or add ''mid-build'' or ''under development'' PBDs to the types of excepted off-campus PBDs.

Response: While we understand the commenters' concerns that hospitals could not have reasonably predicted or expected that new off-campus PBDs would not be paid under the OPPS, section 603 does not provide an exception for off-campus PBDs that were mid-build at the time of enactment. Therefore, we did not propose to include mid-build or under development off-campus PBDs among the types of excepted off-campus PBDs. In addition, we are required to implement the provisions of section 603 to provide payments for nonexcepted items and services furnished by nonexcepted off-campus PBDs under the applicable payment system other than the OPPS beginning January 1, 2017.

Comment: Several commenters believed that CMS misinterpreted the statute when the agency proposed to limit the definition of an excepted off-campus PBD to those that submitted a bill for covered outpatient services under the OPPS furnished prior to November 2, 2015. Commenters believed that CMS' proposal is based on a narrow read of the statute and that Congress did not intend the billing function to be the deciding factor in determining the exceptions requirement. Instead, the commenters requested that CMS consider a more flexible interpretation and except off-campus PBDs that satisfy any of the following scenarios:

- Off-campus PBDs fully operational but not yet treating patients on or before November 2, 2015;
- Off-campus PBDs fully operational and treating patients on or before November 2, 2015, but billing department not yet fully functional; and
- Off-campus PBDs fully operational and treating patients on or before November 2, 2015, but internal process for billing claims includes a standard review period before the claims are submitted to Medicare.

Response: We disagree with the commenters' request to except off-campus PBDs that were operational and not yet treating patients by November 2, 2015. We believe that the exception under section 1833(t)(21)(B)(ii) of the Act, as added by section 603, is limited to those off-campus PBDs that were ''billing under this subsection with respect to covered OPD services furnished prior to [November 2, 2015].'' However, we agree with commenters' that one interpretation of the statute could allow for an exception for off-campus PBDs that furnished a covered OPD service prior to November 2, 2015, but had not submitted a bill to Medicare for such service prior to November 2, 2015. We are finalizing our interpretation as proposed, with modification, which means that off-campus PBDs would be eligible to receive OPPS payment as excepted off-campus PBDs for services that were furnished prior to November 2, 2015, and billed under the OPPS in accordance with timely filing limits.

d. Change of Ownership and Excepted Status

Under current policy, provider-based status is defined as the relationship between a facility and a main provider. If a Medicare-participating hospital, in its entirety, is sold or merges with another hospital, a PBD's provider-based status generally transfers to new ownership as long as the transfer does not result in any material change of provider-based status. A provider-based approval letter for such a department will be considered valid as long as the new owners accepted the prior hospital's provider agreement, consistent with other hospital payment policies.

We have received inquiries regarding whether excepted off-campus PBDs would maintain excepted status if a hospital were purchased by a new owner, if a hospital merged with another provider, or if only an excepted off-campus PBD were sold to another hospital.

In the CY 2017 OPPS/ASC proposed rule (81 FR 45686), we proposed that excepted status for the off-campus PBD would be transferred to new ownership only if ownership of the main provider is also transferred and the Medicare provider agreement is accepted by the new owner. Under our proposal, if the provider agreement is terminated, all excepted off-campus PBDs and the excepted items and services furnished

by such off-campus PBD would no longer be excepted for purposes of paragraphs (1)(B)(v) and (21) of section 1833(t) of the Act. We proposed that individual excepted off-campus PBDs cannot be transferred from one hospital to another and maintain excepted status. We solicited public comments on these proposals.

Comment: A few commenters supported CMS' proposal that an excepted off-campus PBD would continue to be excepted after a change in ownership in which the buyer accepts assignment of the provider agreement. However, many commenters opposed the proposals regarding change of ownership on the grounds that the section 603 provisions do not specifically address change of ownership. The commenters asserted that, had Congress intended payment reductions for purchases or acquisitions of existing off-campus PBDs by a different hospital, Congress would have included it in the law. Several commenters stated that hospitals in financial difficulty that plan to close their inpatient hospital beds will offer to transfer their HOPDs to better-performing hospitals in order to ensure that critical hospital-based outpatient services are still accessible to patients in the community. Similarly, commenters expressed concern that the change of ownership proposals could have an unintended consequence for hospitals that downsize from providing inpatient and outpatient services to outpatient services only or that close inpatient hospital beds but want to retain the outpatient off-campus PBD. Commenters believed that such acquisitions or reconfigurations within a health system may not be financially feasible if the excepted off-campus PBD were to lose payment under the OPPS. To remedy their concerns, the commenters requested that CMS permit individual off-campus PBDs to retain their excepted status even if bought individually by another provider.

Response: We disagree with the commenters who believe that we do not have the authority or are prohibited from addressing change of ownership as part of our implementation of section 603. For hospitals that participate in Medicare, CMS has a longstanding policy codified in regulation at 42 CFR 489.18 and Manual Publication 100–07, Chapter 3, Sections 3210 through 3210.5(C) that addresses change of ownership including merger/acquisitions and consolidations, and the effect on the Medicare provider agreement. Our change of ownership proposals to implement the section 603 provisions are modeled after longstanding payment policy across several payment systems in which assets/liabilities are transferred to the new owner only if the new owner accepts the existing provider agreement. If a hospital is sold or merges with another hospital, a PBD's provider-based status generally transfers to the new ownership as long as the transfer would not result in any material change of provider-based status. In addition, provider-based status is defined as the relationship between a facility and a main hospital provider, not an asset that can be transferred from one provider to another. Therefore, because provider-based status is a relationship with the main hospital provider, it is not practical to allow the sale of an individual PBD even if the main hospital is closing or downsizing. For example, a hospital owner that decides to combine two certified hospitals under one Medicare provider agreement, with one CMS Certification Number (CCN) would lose excepted status if the off-campus PBD was not enrolled as a provider-based department of the resulting combined hospital and billing under the OPPS for covered items and services furnished prior to November 2, 2015.

After consideration of the public comments we received, we are finalizing our proposals without modification. Specifically, we are allowing excepted status for the off-campus PBD to be transferred to new ownership only if ownership of the main provider is also transferred and the Medicare provider agreement is accepted by the new owner. If the provider agreement is terminated, all excepted off-campus PBDs will no longer be excepted for purposes of paragraphs (1)(B)(v) and (21) of section 1833(t) of the Act. Finally, an individual excepted off-campus PBDs cannot be transferred from one hospital to another and maintain excepted status.

e. Comment Solicitation for Data Collection Under Section 1833(t)(21)(D) of the Act

Hospitals are required to include all practice locations on the CMS 855 enrollment form. Beginning in March 2011 and ending in March 2015, in accordance with section 1866(j) of the Act, CMS conducted a revalidation process where all actively enrolled hospitals were required to complete a new CMS 855 enrollment form to (1) initially enroll in Medicare, (2) add a new practice location, or (3) revalidate existing enrollment information.

Collection and retention of Medicare enrollment data have been authorized through a Paperwork Reduction Act notice in the **Federal Register**. The authority for the various types of data to be collected is found in multiple sections of the Act and the Code of Federal Regulations; specifically, in sections 1816, 1819, 1833, 1834, 1842, 1861, 1866, and 1891 of the Act, and 42 CFR Chapter IV, Subchapter A.

As we discussed in the CY 2017 OPPS/ASC proposed rule, sections 1833(t)(21)(A) and (B) of the Act exempt both certain off-campus PBDs and the items and services furnished in certain types of off-campus PBDs from application of sections 1833(t)(1)(B)(v) and (21) of the Act. However, while the Medicare enrollment process requires that a hospital identify the name and address of each of its off-campus PBDs, such departments bill under the CMS Certification Number of the hospital, rather than a separate identifier. Accordingly, at the time of development of the proposed rule, we were unable to automate a process by which we could link hospital enrollment information to claims processing information to identify items and services to specific off-campus PBDs of a hospital. In order to accurately identify items and services furnished by each off-campus PBD (exempt or not) and to actively monitor the expansion of clinical family of services at excepted off-campus PBDs, we sought public comments on whether to require hospitals to self-report this information to us (via their MAC) using the authority under section 1833(t)(21)(D) of the Act to collect information as necessary to implement the provision.

Specifically, we sought public comments on whether hospitals should be required to separately identify all individual excepted off-campus PBD locations, the date that each excepted off-campus PBD began billing and the clinical families of services (shown in Table 21 of the proposed rule) that were provided by the excepted off-campus PBD prior to the November 2, 2015 date of enactment. We indicated that if we were to require hospitals to report this information, we would expect to collect this information through a newly developed form which would be available for download on the CMS Web site.

Comment: Commenters believed that CMS would not be able to distinguish between individual off-campus PBDs of a hospital nor would CMS be able to determine if an individual off-campus PBD billed for certain services prior to enactment based on currently available data. Some commenters believed that an additional data collection would be needed to ascertain this information before CMS could effectively implement

its proposed policy. Another commenter suggested that CMS collect information to separately identify each off-campus PBD location, the date that each off-campus PBD began billing Medicare, the provider number of the parent hospital, and the clinical family of services the off-campus PBD was providing before enactment. This commenter suggested that this information should be made public for use by oversight agencies and policy analysts.

Some commenters asked CMS to analyze whether additional data collection is necessary given the burden for providers. Other commenters believed that the CMS proposals on relocation and expansion of services would require significant data collection to implement. Commenters believed the data collection burden provided good reason for CMS to alter its proposals for relocation and expansion of services.

Response: We thank the commenters for their input. As with OPPS payments generally, we rely on hospitals to bill all HCPCS codes accurately in accordance with their code descriptors and CPT and CMS instructions, and to report charges on claims and charges and costs on their Medicare hospital cost report appropriately. We note that hospital billing, in general, relies upon hospitals to appropriately identify items and services for which they are claiming payment under the Medicare program, including use of modifiers as appropriate. From a monitoring and enforcement perspective, we intend to follow traditional practices, including prepayment and postpayment reviews to the extent applicable to ensure that hospitals are correctly identifying nonexcepted items and services. We expect that existing protocols used by program integrity entities will continue to be used to monitor and enforce appropriate billing of nonexcepted items and services. Hospitals will be expected to maintain documentation sufficient to prove that an off-campus PBD is an excepted off-campus PBD; that is, was an off-campus PBD billing for covered OPD services furnished prior to November 2, 2015. We note that, because multiple off-campus PBDs may bill under the same CMS Control Number (CCN), Medicare billing data may not be sufficient to prove that an off-campus PBD was billing Medicare for covered OPD services furnished prior to November 2, 2015.

In addition, we plan to issue instructions to the Medicare contractors to update their systems using enrollment data that would identify each off-campus PBD by physical address and by the date it was added to the hospital's enrollment.

Comment: One commenter suggested that CMS wait to require additional data collection until after it had the opportunity to analyze data provided by the mandatory use of the ''PO'' modifier to indicate off-campus OPPS services that began in CY 2016.

Response: We appreciate the commenter's feedback. As the commenter mentioned, use of the ''PO'' modifier became mandatory for services furnished on or after January 1, 2016 (it was voluntary in 2015) for all off-campus PBDs other than remote locations, satellite facilities, and EDs. We are monitoring data that include the ''PO'' modifier and intend to continue to monitor the data. In addition, we are establishing a new modifier ''PN'' that will be required to be billed with nonexcepted items and services. This new modifier is discussed in greater detail later in this section, is also discussed in the interim final rule with comment period in section X.B. of this document, and will be discussed in subregulatory guidance.

Comment: MedPAC and other commenters suggested that CMS create new claim line modifiers to indicate when an item or service is an excepted or nonexcepted service. MedPAC suggested that such modifiers would help ensure program integrity. In addition, MedPAC suggested that CMS establish modifiers to indicate when a service is provided in a dedicated ED and whether the dedicated ED is on-campus or off-campus, citing its June 2016 report in which it quantified the recent growth in the number of off-campus EDs billing Medicare and the inability of the Medicare program to distinguish between on-campus and off-campus ED services. In addition, MedPAC suggested that CMS seek legislative authority to impose strict penalties on hospitals that inappropriately bill for nonexcepted services under the OPPS and that these claims should be subject to the False Claims Act.

Response: We appreciate MedPAC's detailed comments on these issues. We have established a new claim line modifier for nonexcepted items and services (''PN'') that can be used to identify and pay nonexcepted items and services billed on an institutional claim. This modifier will be effective for items and services furnished on or after January 1, 2017, and is discussed in more detail in section X.A.3.b.(2) of this final rule with comment period. We have not established a modifier specific to services provided at an off-campus dedicated ED at this time and note that EDs, whether they are on- campus or off-campus, are excepted from section 603. The comment suggesting that we seek legislative authority to impose penalties against hospitals that inappropriately bill for nonexcepted services is outside the scope of the proposed rule.

3. Payment for Items and Services Furnished in Off-Campus PBDs to Which Sections 1833(t)(1)(B)(v) and 1833(t)(21) of the Act Apply (Nonexcepted Items and Services Furnished by Nonexcepted Off-Campus PBDs)

a. Background on Medicare Payment for Services Furnished in an Off-Campus PBD

As previously noted, under existing policies, Medicare generally makes two types of payments for items and services furnished in an off-campus PBD: (1) Payment for the items and services furnished by the off-campus PBD (that is, the facility) where the procedure is performed (for example, surgical supplies, equipment, and nursing services); and (2) payment for the physician's professional services in furnishing the service(s).

The first type of payment is made under the OPPS. Items and services furnished in an off-campus PBD are billed using HCPCS codes and paid under the OPPS according to the APC group to which the HCPCS code of the item or service is assigned. The OPPS includes payment for most hospital outpatient services, except those identified in section I.C. of this final rule. Section 1833(t)(1)(B) of the Act generally outlines what are covered OPD services eligible for payment under the OPPS. Sections 1833(t)(1)(B)(i) through (iii) of the Act provide for Medicare payment under the OPPS for hospital outpatient services designated by the Secretary (which includes partial hospitalization services furnished by community mental health centers (CMHCs)), certain items and services that are furnished to inpatients who have exhausted their Part A benefits or who are otherwise not in a covered Part A stay, and certain implantable items. Section 1833(t)(1)(B)(iv) and new subsection (v) of the Act, as added by section 603 of Public Law 114–74, list those items and services that are not covered OPD services and, therefore, not eligible for Medicare payment under the OPPS.

The second type of payment for items and services furnished in an off-campus PBD is for physicians' services and is made under the MPFS at the MPFS ''facility rate.'' For most MPFS services, Medicare maintains two separate payment rates: One that assumes a

payment is also made to the facility (*i.e.,* the facility rate); and another that assumes the professional furnishes and incurs the full costs associated with furnishing the service (that is, the nonfacility rate). The MPFS facility rate is based on the relative resources involved in furnishing a service when separate Medicare payment is also made to the facility, usually through an institutional payment system, like the OPPS. The MPFS nonfacility rate, which reflects all of the direct and indirect practice expenses involved in furnishing the particular services, is paid in a variety of settings such as physician offices, where Medicare does not make a separate, institutional payment to the facility.

Under Medicare Part B, the beneficiary is responsible for paying cost-sharing, which is generally about 20 percent of both the OPPS hospital payment amount and the MPFS facility allowed amount. Because the sum of the OPPS payment and the MPFS facility payment is greater than the MPFS nonfacility payment for most services, there is generally a greater cost to both the beneficiary and the Medicare program for services furnished in facilities and paid through both an institutional payment system like the OPPS and the MPFS.

The incentives for hospital acquisition of physician practices and the resultant higher payments for the same types of services when those physician practices are converted to PBDs have been the topic of several reports in the popular media and by governmental agencies. For example, MedPAC stated in its March 2014 Report to Congress that Medicare pays more than twice as much for a level II echocardiogram in an outpatient facility ($453) as it does in a freestanding physician office ($189) (based on CY 2014 payment rates). The report determined that the payment difference creates a financial incentive for hospitals to purchase freestanding physicians' offices and convert them to HOPDs without changing their location or patient-mix. (MedPAC March 2014 Report to Congress, Chapter 3.) The Government Accountability Office (GAO) also published a report in response to a Congressional request about hospital vertical consolidation. Vertical consolidation is a transaction (or combination of transactions) through which a hospital acquires a physician practice. In addition, the Office of Inspector General (OIG) published a report in June 2016 entitled ''CMS Is Taking Steps To Improve Oversight of Provider-Based Facilities, But Vulnerabilities Remain'' (OEI–04–12–00380), in which it highlighted concerns about provider-based status in light of the higher costs to both the Medicare program and Medicare beneficiaries relative to when the same services are furnished at a freestanding facility such as a physician's office. These types of reports highlight the types of concerns we believe Congress may have been trying to address with section 603 of Public Law 114–74.

As we stated in the CY 2017 OPPS/ASC proposed rule, as we developed our proposal to implement section 603, we took into consideration the concerns described above, the specific statutory language, and the discretion provided in that statutory language. As described in detail earlier and below, paragraphs (1)(B)(v) and (21) of section 1833(t), as added by section 603 of Public Law 114–74, provide that certain items and services furnished by certain off-campus PBDs (that is, nonexcepted items and services furnished by nonexcepted off-campus PBDs) are not covered OPD services under the OPPS, and that payment shall be made for those applicable items and services under the applicable payment system if the requirements for such payment are otherwise met. However, the statutory amendments do not reference or define a specific applicable payment system under which payment shall be made.

We have established and maintained institutional Medicare payment systems based on specific statutory requirements and on how particular institutions provide particular kinds of services and incur particular kinds of costs. The rules regarding provider and supplier enrollment, conditions of participation, coverage, payment, billing, cost reporting, and coding vary across these institutional payment systems. While some of the requirements are explicitly described in statute and others are captured in CMS regulatory rules or subregulatory guidance, the requirements are unique to the particular type of institution.

Section 1833(t)(21)(C) of the Act provides for the availability of payment under other payment systems for ''nonexcepted items and services.'' Section 1833(t)(21)(C) of the Act provides that payments for these nonexcepted items and services furnished by a nonexcepted off-campus PBD shall be made under the applicable payment system under Medicare Part B (other than under this subsection, that is OPPS), if the requirements for such payment are otherwise met.

While we noted our intention to provide a mechanism for a hospital to bill and receive payment for nonexcepted items and services furnished by an off-campus PBD under an applicable payment system that is not the OPPS in the proposed rule, we further noted that there was no straightforward way to do that before January 1, 2017. As discussed elsewhere in this final rule with comment period, we also proposed the MPFS to be the applicable payment system for nonexcepted items and services furnished and billed by off-campus PBDs. We stated in the proposed rule that, at a minimum, numerous complex systems changes would need to be made to allow an off-campus PBD to bill and be paid as another provider or supplier type. For example, currently, off-campus PBDs bill under the OPPS for their services on an institutional claim, whereas physicians and other suppliers bill under the MPFS on a practitioner claim; and there are numerous systems edits designed to be sure that entities enrolled in Medicare bill for their services only within their own payment systems. The Medicare system that is used to process professional claims (the Multi-Carrier System or ''MCS'') was not designed to accept nor process institutional OPPS claims. Rather, OPPS claims are processed through an entirely separate system referred to as the Fiscal Intermediary Standard System or ''FISS'' system. To permit an off-campus PBD to bill under a different payment system than the OPPS would require significant changes to these complex systems as well as other systems involved in the processing of Medicare Part B claims. In the proposed rule, we did not suggest these operational issues are insurmountable, but we indicated that they are multifaceted and will require time and care to resolve. As such, we did not propose a mechanism for an off-campus PBD to bill and receive payment for nonexcepted items and services furnished on or after January 1, 2017, under an applicable payment system that is not the OPPS.

As described in greater detail below, in order to begin implementing the requirements of section 603 of Public Law 114–74, we proposed to specify that the applicable payment system for purposes of section 1833(t)(21)(C) of the Act is the MPFS. We indicated that while we did not believe there is a way to permit off-campus PBDs to bill for nonexcepted items and services they furnish under the MPFS beginning January 1, 2017, we were actively exploring options that would allow off-campus PBDs to bill for these services under another payment system and be paid at the applicable rate under such system beginning in CY 2018. We solicited public comment on the

changes that might need to be made to enrollment forms, claim forms, the hospital cost report, as well as any other operational changes that might need to be made in order to allow an off-campus PBD to bill for nonexcepted items and services under a payment system other than the OPPS in a way that provides accurate payments under such payment system and minimizes burden on both providers and Medicare beneficiaries. Accordingly, we stated that we intended the policy we proposed to be a temporary, 1-year solution until we could adapt our systems to accommodate payment to off-campus PBDs for the nonexcepted items and services they furnish under the applicable payment system, other than OPPS. The public comments we received on this proposal will be discussed in the following sections that discuss each aspect of the proposed payment policy in detail.

b. Payment for Applicable Items and Services Furnished in Off-Campus PBDs That Are Subject to Sections 1833(t)(1)(B)(v) and (21) of the Act

(1) Definition of ''Applicable Payment System'' for Nonexcepted Items and Services

In the CY 2017 OPPS/ASC proposed rule (81 FR 45688), we describe our interpretation and proposed implementation of section 1833(t)(21)(C) of the Act, as it applies to nonexcepted items and services for CY 2017. Section 1833(t)(21)(C) of the Act requires that payments for nonexcepted items and services be made under the applicable payment system under Medicare Part B (other than under this subsection; that is, the OPPS) if the requirements for such payment are otherwise met. While section 1833(t)(21)(C) of the Act clearly specifies that payment for nonexcepted items and services shall not be made under section 1833(t) (that is, the OPPS), it does not define the term ''applicable payment system.'' In analyzing the term ''applicable payment system,'' we considered whether and how the requirements for payment could be met under alternative payment systems in order to pay for nonexcepted items and services, and considered several other payment systems under which payment is made for similar items and services, such as the ASC payment system, the MPFS, or the CLFS.

As noted above, many off-campus PBDs were initially enrolled in Medicare as freestanding physician practices, and were converted as evidenced by the rapid growth of vertical hospital consolidation and hospital acquisition of physician practices.[5] We believe that this trend has continued. In September 2016, the Physicians Advocacy Institute collaborated with Avalere Health to study recent physician employment trends.[6] Avalere analyzed a database that contains physician and practice location information on hospital/health system ownership and linked data with the CMS National Plan & Provider Enumeration System. The findings showed that hospital ownership of physician practices has increased by 86 percent and the percent of hospital-employed physicians increased by almost 50 percent from July 2012 to July 2015.

Before these physician practices were converted to off-campus PBDs, the services furnished in these locations were paid under the MPFS using an appropriate place of service code that identified the location as a nonfacility setting. This would trigger Medicare payment under the MPFS at the nonfacility rate, which includes payment for the ''practice expense'' resources involved in furnishing services. Many physician practices that were acquired by a hospital became provider-based to the hospital in accordance with the regulations at 42 CFR 413.65. Once a hospital-acquired physician practice became provider-based, the location became an off-campus PBD eligible to bill Medicare under the OPPS for its facility services, while physicians' services furnished in the off-campus PBD were paid at the facility rate under the MPFS. Because many of the services furnished in off-campus PBDs are identical to those furnished in freestanding physician practices, as discussed later in this section, in the CY 2017 OPPS/ASC proposed rule, we proposed to designate the applicable payment system for the payment of the majority of nonexcepted items and services to be the MPFS. Specifically, we proposed that, because we currently do not have a mechanism to pay the off-campus PBD for nonexcepted items and services, the physician or practitioner would bill and be paid for items and services in the off-campus PBD under the MPFS at the nonfacility rate instead of the facility rate.

When items and services similar to those often furnished by off-campus PBDs are furnished outside of a setting with an applicable Medicare institutional payment system, Medicare payment is generally made under the MPFS under one of several different benefit categories of Medicare benefit such as physician's services, diagnostic tests, preventive services, or radiation treatment services. Although section 1833(t)(1)(B)(v) of the Act specifically carves out from the definition of covered OPD services those items and services defined at section 1833(t)(21)(A) of the Act furnished by certain off-campus PBDs defined by section 1833(t)(21)(B) of the Act, the amendments to section 1833(t) of the Act do not specify that the off-campus outpatient departments of a provider are no longer considered a PBD part of the hospital. We stated in the proposed rule that this nuance made it difficult for us to determine how to provide payment for the hospital-based portion of the services under MPFS because, as previously noted, Medicare payment processing systems were not designed to allow these off-campus PBDs to bill for their hospital services under a payment system other than OPPS.

Currently, a hospital (including a PBD) does not meet the requirements to bill under another payment system; that is, a hospital and its departments are enrolled as such in the Provider Enrollment, Chain and Ownership System (PECOS) and may only submit institutional claims for payment of covered OPD services under the hospital OPPS under the CMS Certification Number of the hospital. As explained above, there are several other Medicare payment systems for other types of providers and suppliers. Many of these are designed for particular kinds of institutional settings, are specifically authorized by law, and have their own regulations, payment methodologies, rates, enrollment and billing requirements, and in some cases, cost reporting requirements. While the services furnished in a PBD may be the same or similar to those that are furnished in other sites of service, for Medicare purposes, an off-campus PBD is considered to be part of the hospital that meets the requirements for payment under the OPPS for covered OPD services. There currently is no mechanism for it to be paid under a different payment system. In order to allow an off-campus PBD to bill under the MPFS for nonexcepted items and services, we indicated in the proposed

[5] The number of vertically consolidated hospitals and physicians increased from 2007 through 2013. Specifically, the number of vertically consolidated hospitals increased from about 1,400 to 1,700, while the number of vertically consolidated physicians nearly doubled from about 96,000 to 182,000. This growth occurred across all regions and hospital sizes, but was more rapid in recent years. (Government Accountability Office; GAO 16–189, December 2015; *http://www.gao.gov/products/GAO–16–189*).

[6] Avalere Health Study. Physician Practice Acquistion Study: National and Regional Employment Changes. Prepared for Physicians Advocacy Institute. September 2016.

rule that we believe it would be necessary to establish a new provider/supplier type (for nonexcepted off-campus PBDs) that could bill and be paid under the MPFS for nonexcepted items and services using the professional claim. At the time of the proposed rule, we did not propose new mechanisms to allow an off-campus PBD to bill and receive payment from Medicare for these nonexcepted items and services as currently enrolled as a hospital based department. However, as described in detail later in this section, we solicited comments on changes that would need to be made in order to allow an off-campus PBD to bill for nonexcepted items services it furnishes under a payment system other than the OPPS.

Accordingly, we proposed the MPFS to be the applicable payment system for nonexcepted items and services that, but for section 603, would have otherwise been paid under the OPPS; and that payment would be made for applicable nonexcepted items and services to the physician or practitioner under the MPFS at the nonfacility rate because no separate facility payment would be made to the hospital. We also noted that, for CY 2017, no mechanism would allow an off-campus PBD to bill under the MPFS for nonexcepted items and services for which coding and billing rules would otherwise allow payment (such as the technical component of diagnostic tests or radiation treatment delivery services). We sought comment on the kinds of changes that would need to be made in order to allow off-campus PBDs to bill for these kinds of services in the future. We noted that the hospital may continue to bill for services that are not paid under the OPPS, such as laboratory services.

Comment: Many commenters disagreed that the MPFS should be the applicable payment system and suggested that the ASC payment system, a combination of the ASC payment system and the MPFS, or an entirely new Part B payment system should be the applicable payment system for nonexcepted items and services. Many of these commenters believed that the applicable payment system could be an entirely new payment system that is an amalgamation of current Part B payment systems (the ASC payment system, the MPFS, and the OPPS) that selects whichever current system best applies for the applicable service. Commenters noted that, for many surgical services, the ASC payment system would better reflect facility costs than the MPFS. MedPAC discouraged CMS from creating a new provider/supplier type. MedPAC and other commenters agreed with the proposal to establish the MPFS as the applicable payment system for nonexcepted services. Other commenters suggested that the MPFS is an appropriate applicable payment system because it reduces cost of services for beneficiaries and creates more equitable payments between off-campus PBDs and nonprovider-based clinics that bill under the MPFS instead of the OPPS.

Response: We thank commenters for their feedback. After considering the public comments on the proposed rule, we continue to believe that the MPFS is the appropriate applicable payment system for nonexcepted items and services. As previously mentioned, many of the services furnished in off-campus PBDs are also furnished in the physician office setting. We reiterate that many off-campus PBDs were initially enrolled in Medicare as freestanding physician practices, and were converted as evidenced by the rapid growth of vertical hospital consolidation and hospital acquisition of physician practices. In addition, the findings of the recent Avalere Health study mentioned earlier showed that hospital ownership of physician practices has increased by 86 percent and the percent of hospital-employed physicians increased by almost 50 percent from July 2012 to July 2015. As mentioned previously in this section, MedPAC commended CMS for the effort to rigorously implement section 603 and stated that, if finalized, the proposals would have the potential to reduce the financial burden on taxpayers and beneficiaries, although there would likely be substantial administrative burdens on the agency and its contractors and providers. Furthermore, preliminary data billed by off-campus departments with the ''PO'' modifier indicate that most items and services furnished in those departments are the types of services that are also commonly furnished in the physician office setting. The most commonly billed item or service was for an evaluation and management visit, followed by diagnostic and imaging services, drugs or biologicals and drug administration. We believe that adopting the MPFS as the applicable payment system is the most appropriate system for these nonexcepted off-campus PBDs items and services and is appropriate to implement section 603. However, we are modifying our proposal regarding payment for nonexcepted items and services, as discussed in section X.A.3.a.(2) of this final rule with comment period.

(2) Definition of Applicable Items and Services and Section 603 Amendment to Section 1833(t)(1)(B) of the Act and Payment for Nonexcepted Items and Services for CY 2017

(a) Background

Section 1833(t)(21)(A) of the Act defines the term ''applicable items and services'' for purposes of paragraph (1)(B)(v) and paragraph (21) of section 1833(t) to mean items and services (other than those furnished by a dedicated emergency department). Paragraph (1)(B)(v) of such section then specifically carves out from the definition of covered OPD services, that is, those applicable items and services that are furnished on or after January 1, 2017, by an off-campus PBD, as defined in paragraph (21)(B) of such section. Thus, such applicable items and services are not eligible for payment under the OPPS because they are not covered OPD services. Under our proposals in the CY 2017 OPPS/ASC proposed rule, we explained that this would mean that all items and services furnished by a nonexcepted off-campus PBD and those nonexcepted items and services furnished by an excepted off-campus PBD (collectively references as nonexcepted items and services) are applicable items and services under the statute. Therefore, we stated in the proposed rule that instead of being eligible for payment under the OPPS as covered OPD services, paragraph (21)(C) of section 1833(t) of the Act requires that, for nonexcepted items and services, payment shall be made under the applicable payment system, other than OPPS, if the requirements for such payment are otherwise met. In other words, under our proposed rule, the payment requirement under paragraph (21)(C) of section 1833(t) pf the Act applies to items and services furnished by nonexcepted off-campus PBDs and for expanded clinical families of services furnished by excepted off-campus PBDs (nonexcepted items and services). However, we note here that the proposed payment policy will not apply to expanded items and services because we are not finalizing our proposal with respect to expanded clinical families of services furnished by excepted off-campus PBDs.

(b) Payment Policy for CY 2017

In accordance with sections 1833(t)(1)(B)(v) and 1833(t)(21)(C) of the Act, we specified in the CY 2017 OPPS/ASC proposed rule that payment for nonexcepted items and services as defined in section X.A.2. of the proposed rule will no longer be made under the OPPS, effective January 1,

2017. Instead, we proposed that, for items and services for which payment can be made to a billing physician or practitioner under the MPFS, the physician or practitioner furnishing such services in the off-campus PBD would bill under the MPFS at the nonfacility rate. As discussed in the proposed rule, we do not believe that, under current systems, an off-campus PBD could be paid for its facility services under the MPFS, but we noted that we would actively explore options that would allow for this beginning in CY 2018. Alternatively, we noted that an off-campus PBD continues to have the option to enroll as a freestanding facility or supplier in order to bill for the nonexcepted items and services it furnishes (which is different from billing only for reassigned physicians' services) under the MPFS.

At the time of development of the proposed rule, we did not propose a change in payment policy under the MPFS regarding these nonexcepted items and services. However, in the CY 2017 MPFS proposed rule, we proposed to amend our regulations and subregulatory guidance to specify that physicians and nonphysician practitioners furnishing professional services would be paid the MPFS nonfacility rate when billing for such services because there will be no accompanying Medicare facility payment for nonexcepted items and services furnished in that setting. (We refer readers to the CY 2017 MPFS final rule with comment period for a discussion of the final policies for CY 2017.) The MPFS nonfacility rate is calculated based on the full costs of furnishing a service, including, but not limited to, space, overhead, equipment, and supplies. Under the MPFS, there are many services that include both a professional component and a technical component. Similarly, there are some services that are defined as either a ''professional-only'' or ''technical-only'' service. The professional component is based on the relative resource costs of the physician's work involved in furnishing the service and is generally paid at a single rate under the MPFS, regardless of where the service is performed. The technical component portion of the service is based on the relative resource costs of the nonphysician clinical staff who perform the test, medical equipment, medical supplies, and overhead expenses. When the service is furnished in a setting where Medicare makes a separate payment to the facility under an institutional payment system, the technical component is not paid under the MPFS because the practitioner/supplier did not incur the cost of furnishing the technical component. Rather, it is paid to the facility under the applicable institutional payment system.

As we noted in the proposed rule, if an off-campus PBD that furnishes nonexcepted items and services wishes to bill Medicare for those services, it could choose to meet the requirements to bill and receive payment under a payment system other than the OPPS by enrolling the off-campus PBD as another provider/supplier type. For example, an off-campus PBD could enroll in Medicare as an appropriate alternative provider or supplier type (such as an ASC or physician group practice). The enrolled provider/supplier would then be able to bill and be paid under the payment system for that type of Medicare enrolled entity. For example, if an off-campus PBD were to enroll as a group practice, it would bill on the professional claim and be paid under the MPFS at the nonfacility rate in accordance with laws and regulations that apply under the MPFS.

We recognize that our proposal in the CY 2017 OPPS/ASC proposed rule to pay under the MPFS for all nonexcepted items and services furnished to beneficiaries could result in hospitals establishing business arrangements with the physicians or nonphysician practitioners who bill under the MPFS. In the proposed rule, we solicited public comments regarding the impact of other billing and claims submission rules, the fraud and abuse laws, and other statutory and regulatory provisions on our proposals. Specifically, we solicited public comments regarding the limitations of section 1815(c) of the Act and 42 CFR 424.73 (the reassignment rules); the limitations of section 1842(n) of the Act and 42 CFR 414.50 (the anti-markup prohibition); the application of section 1877 of the Act and 42 CFR 411.350 through 411.389 (the physician self-referral provisions) to any compensation arrangements that may arise; and the application of section 1128B(b) of the Act (the Federal anti-kickback statute) to arrangements between hospitals and the physicians and other nonphysician practitioners who refer to them. We stated that we will consider these laws and regulations as well, and look forward to reviewing public comments on the anticipated impact of these provisions on our proposed policy and any possible future proposals.

In the proposed rule, we noted that there are some services that off-campus departments may furnish that are not billed or paid under the OPPS. For example, although laboratory tests are generally packaged under the OPPS, there are some circumstances in which hospitals are permitted to bill for certain laboratory tests and receive separate payment under the CLFS. These circumstances include:

- Outpatient laboratory tests are the only services provided. If the hospital provides outpatient laboratory tests only and no other hospital outpatient services are reported on the same claim.
- Unrelated outpatient laboratory tests. If the hospital provides an outpatient laboratory test on the same claim as other hospital outpatient services that is clinically unrelated to the other hospital outpatient services (that is, the laboratory test is ordered by a different practitioner than the practitioner who ordered the other hospital outpatient services and for a different diagnosis than the other hospital outpatient services). We note that this exception was proposed for deletion for CY 2017, and this deletion is being finalized in this final rule with comment period. We refer readers to section II.A.3.b.(2) of this final rule with comment period for a discussion of this policy.
- Molecular pathology laboratory tests and advanced diagnostic laboratory tests (ADLTs) (section II.A.3.b.(3) of this final rule with comment period).
- Laboratory tests that are preventive services.

Under our proposal, if a laboratory test furnished by a nonexcepted off-campus PBD is eligible for separate payment under the CLFS, the hospital may continue to bill for it and receive payment under the CLFS. In addition, a bill may be submitted under the MPFS by the practitioner (or hospital for physicians who have reassigned their benefit), provided that the practitioner meets all the MPFS requirements. Consistent with cost reporting guidance and the Medicare Provider Reimbursement Manual, Part 1, Chapter 23, Section 2302.8, hospitals should report these laboratory services on a reimbursable cost center on the hospital cost report.

In addition, with respect to partial hospitalization programs (PHP) (intensive outpatient psychiatric day treatment programs furnished to patients as an alternative to inpatient psychiatric hospitalization or as a stepdown to shorten an inpatient stay and transition a patient to a less intensive level of care), section 1861(ff)(3)(A) of the Act specifies that a PHP is a program furnished by a hospital, to its outpatients, or by a CMHC. Because CMHCs also furnish PHP services and are ineligible to be

provider-based to a hospital, we noted in our proposal that a nonexcepted off-campus PBD would be eligible for PHP payment if the entity enrolls and bills as a CMHC. We noted that a hospital may choose to enroll a nonexcepted off-campus PBD as a CMHC, provided it meets all Medicare requirements and conditions of participation. While a hospital could still choose this option, we are modifying this proposal in order to provide for payment for PHP services furnished by a nonexcepted off-campus PBD under the MPFS as explained later in this interim final rule with comment period.

Comment: Many commenters opposed the payment proposal for nonexcepted items and services because they believed it would make no payment to hospitals for the nonexcepted items and services they furnish to Medicare beneficiaries. These commenters specifically noted that, under the proposal, no payment would be made to the nonexcepted off-campus PBD of the hospital for the nursing, laboratory, imaging, chemotherapy, surgical services, and many other reasonable and necessary services they provide to Medicare beneficiaries. The commenters believed that such a payment policy is unjustified. In addition, these commenters believed that CMS has a mechanism at its disposal that it could use to pay hospitals directly for nonexcepted services under the MPFS and urged CMS to work to be able to use this, or another, mechanism to provide reasonable payment to hospitals. The commenters stated that CMS must delay implementation of its site-neutral policies until it does so. In addition, the commenters objected to the notion that an off-campus PBD would have to enroll as a different provider/supplier type in order to bill for its services.

Many commenters raised concerns regarding the impact of the fraud and abuse laws on hospitals and physicians in the event that CMS finalizes the proposals. Commenters identified perceived legal and operational impediments associated with the payment policies as they affect nonexcepted off-campus OPDs. Specifically, the commenters were concerned that the proposed payment policies, if finalized, would require hospitals to enter into financial relationships with referring physicians that cannot satisfy the requirements of an applicable exception to the physician self-referral law, resulting in a violation of that law's referral and claims submission prohibitions and subjecting hospitals to False Claims Act liability. Some commenters expressed doubt that, even if hospitals and physicians could structure their business arrangements to avoid noncompliance with the physician self-referral law and Federal anti-kickback statute, they could do so by January 1, 2017 when the payment policies would go into effect. As a result, according to the commenters, beneficiary access could be limited if off-campus PBDs were forced to close or remain ''frozen'' as of November 2, 2015 due to their inability to comply with the physician self-referral law or Federal anti-kickback statute. A few commenters believed that the impact and effect of the proposals would be particularly burdensome in rural areas where, often, the only available services are provided by hospitals. Other commenters expressed concerns about the impact of certain State laws, such as fee-splitting and corporate practice of medicine prohibitions, on the ability of hospitals and physicians to implement changes in their business and employment arrangements in order to comply with the proposed payment policies if finalized. One commenter expressed concerns about potential False Claims Act liability if a physician were to submit a claim with the place of service noted as ''non-facility'' (in accordance with the CMS billing and claims submission rules under the proposed payment policy) when the service was, in fact, furnished in an nonexcepted off-campus PBD.

Response: We appreciate the commenters' consideration of our proposals regarding the impact of the Federal fraud and abuse laws on hospitals and physicians should we finalize our proposals. We reiterate our belief that our proposal to make payment under the MPFS at the nonfacility rate for CY 2017 only would result in site neutral payment between physician offices and hospitals for furnished nonexcepted items and services, and we disagree that our proposal was ''unjustified.'' However, we agree with the commenters that our proposed payment policies could have required hospitals and physicians to establish financial relationships that implicate the physician self-referral law and Federal anti-kickback statute for CY 2017 only. Further, we recognize the difficulties that would be faced by hospitals and physicians in establishing financial relationships that comply with the physician self-referral law and other fraud and abuse laws (mentioned earlier) under our proposed payment methodology for nonexcepted items and services. Therefore, we are not finalizing our proposal. Instead, we are issuing an interim final rule with comment period under section X.B. of this document (and in conjunction with this final rule with comment period) to establish rates under the MPFS that will be paid for nonexcepted items and services furnished by off-campus PBDs, effective for services furnished on or after January 1, 2017. Because we are providing for payment directly to hospitals that furnish services to beneficiaries in nonexcepted off-campus PBDs, we believe that the commenters' concerns regarding the application of the Federal fraud and abuse laws are moot. Specifically, we refer readers to our commentary in the CY 2016 MPFS final rule with comment period (80 FR 71321) where we discuss the application of the physician self-referral law in ''split billing'' arrangements under which a hospital bills the Medicare program under the OPPS for the resources and services that it furnishes to a beneficiary in a PBD (that is, the facility fee) and the referring physician bills the Medicare program under the MPFS for only the professional services that he or she furnishes to the beneficiary in a PBD.

Details about the specific payment that will be made for these services are included in the interim final rule with comment period under section X.B. of this document.

Comment: Many commenters who did not support the proposed payment policy and who suggested that CMS delay implementation of the section 603 provisions requested that CMS convene a stakeholder workgroup or gather stakeholder input and expert advice on an alternative payment policy. Some commenters suggested that CMS pay providers the technical component of services from the MPFS. Many hospital commenters believed that the MPFS nonfacility rate is insufficient to pay for services provided at hospital facilities. Some commenters objected to the idea of nonexcepted off-campus PBDs having to enroll as another provider/supplier type to receive Medicare payment, especially if the CY 2017 policy is a transition to a more permanent policy in CY 2018. Some commenters suggested paying hospitals through the institutional claim at MPFS rates. Other commenters suggested adopting the ASC payment system as the applicable payment system instead of the MPFS.

Some commenters recommended that CMS adopt an alternative payment policy that would allow the off-campus PBD to bill under the OPPS using a modifier that would trigger payment based on the practice expense for the service under the MPFS. Commenters believed that this alternative would allow facility payment for services provided until CMS develops a new

payment system or billing mechanism. Other commenters noted that hospital-billed therapy and laboratory services are currently paid under other fee schedules and stated that Medicare already has the ability to pay for nonexcepted items and services billed on the institutional claim.

Response: We thank commenters for their feedback. We do not believe a delay in implementation is necessary. We also note that delaying the provision for a year would not only result in not meeting the statutory deadline for implementing section 603, but also a year's loss of savings to the Medicare Part B program, which the CMS Office of the Actuary estimates to be $50 million for CY 2017 in this final rule.

We are issuing an interim final rule with comment period under section X.B. of this document to establish new MPFS rates for nonexcepted items and services furnished in an off-campus PBD. Providers will be able to bill for nonexcepted items and services on the institutional claim utilizing new claim line modifier ''PN'' to indicate that an item or service is a nonexcepted item or service. We consider these rates to be site-of-service specific rates for the technical component of MPFS services.

As described in the interim final rule with comment period, for CY 2017, the newly established MPFS rate for nonexcepted items and services will be based upon OPPS rates. That is, several payment policies that apply under the OPPS, including C–APCs and OPPS packaging logic, are being adopted under the newly established site-of-service MPFS rates. Because we do not currently have site-of-service specific data from nonexcepted off-campus PBDs on which to base these rates for CY 2017, we conducted an analysis of off-campus PBD payment data from 2016 and compared these payment data to MPFS rates. As discussed in detail in the interim final rule with comment period under section X.B. of this document, we are using a rate that is 50 percent of the OPPS rate for each nonexcepted item or service, with some exceptions, as the interim technical component of MPFS services for items or services provided at a nonexcepted PBD. We are seeking public comments on the new payment mechanisms and rates detailed in the interim final rule with comment period and, based on these comments, will make adjustments as necessary to the payment mechanisms and rates through rulemaking that could be effective in CY 2017.

We agree with the commenters who recommended that we pay for nonexcepted items and services using the technical component of the facility MPFS rate. Specifically, we are establishing, under the interim final rule with comment period, policies under the MPFS that will allow nonexcepted off-campus PBDs to be paid the site-specific technical component for services beginning in CY 2017. As discussed in the interim final rule with comment period, the initial payment rates will be made based on the general relationship between OPPS and MPFS rates for comparable services. Therefore, we note that payments under our interim final rule policy may not be exactly equal to payment under the technical component of MPFS for any specific item or service. Over time, we believe this billing and payment mechanism will provide information that will help us to refine and improve the accuracy of payment for these services under the MPFS. We will continue to pay for therapy and preventive services, as well as separately payable drugs, at the MPFS rate because nonexcepted off-campus PBDs would bill under the MPFS.

The new rates under the MPFS will incorporate several important exceptions to the general payment methodologies. These exceptions are described in the interim final rule with comment period. Briefly, because payment for Part B drugs is prescribed under section 1842(o) and 1847A of the Act and separately payable Part B drugs are paid at the same rate under the OPPS and the MPFS, which is a longstanding policy determination rather than a statutory requirement, we are not reducing the payment rate for separately payable Part B drugs. Similarly, we will use the existing MPFS rate for items and services that are currently paid the MPFS rate under the OPPS, including the majority of therapy and preventive services.

We believe that these payment policies address the majority of issues and concerns raised by commenters. Accordingly, we do not believe it is necessary to establish a formal stakeholder workgroup. However, we continue to be interested in feedback and comments from all interested parties on the payment policies we have set forth in the interim final rule with comment period, especially comments related to stakeholders' preference for the approach being adopted in the interim final rule with comment period as well as potential other approaches, or ratesetting methodologies based on readily available data.

Comment: Many commenters noted that, under the proposed rule, there would be services for which no payment would be available because there is no payment rate for these services under the MPFS or because these services are furnished ''incident to'' physician services. Commenters noted that these services included drug administration, Part B drugs, clinical laboratory services, observation services, partial hospitalization services, and services that do not have nonfacility RVUs under the MPFS. Commenters expressed concern that the proposed payment policy would result in impracticable payment options for these services would lead to access issues for beneficiaries.

Commenters specifically noted that outpatient services furnished ''incident-to'' physicians' services are only priced in the nonfacility setting under the MPFS. The commenters added that payment for these services is provided under the OPPS, not the MPFS, when these services are provided in an outpatient setting. The commenters suggested that payment to the practitioner for ''incident to'' services furnished in a nonexcepted off-campus PBD would run counter to CMS' ''incident to'' regulations at 42 CFR 410.26 (b)(1), which state that services and supplies must be furnished in a noninstitutional setting to noninstitutional patients. The commenters suggested that these regulations indicated that there would be no payment for ''incident-to'' services provided by non-excepted PBDs under the proposed policy, as payment could not be made to the PBD nor the practitioner for these services.

Response: We thank the commenters for their feedback. As discussed in the interim final rule with comment period, we are implementing a policy that will allow hospitals to bill for nonexcepted items and services, including many of the types of services that commenters mentioned, under newly established rates under the MPFS that are being adopted in the interim final rule with comment period.

Comment: Several commenters disagreed with the payment proposal as it relates to PHP services. These commenters stated that the proposal would provide no payment for PHP services which would disrupt the continuity of care that is provided by hospital-based PHPs and restrict access to PHP services. Several commenters urged CMS to apply the authority under section 1833(t)(2)(E) of the Act, thereby allowing nonexcepted off-campus PBD PHPs to continue being paid under OPPS. Many commenters believed that Congress did not intend for PHP to no longer be paid when furnished at nonexcepted off-campus PBDs. In addition, the commenters noted that

application of the MPFS to nonexcepted off-campus PBDs would require hospitals to hire additional physicians in order to meet the MPFS supervision requirements and completely restructure residency programs so that attending physicians meet the requirements to provide ''personally performed services'' to obtain payment under the MPFS. The commenters believed this would radically alter the residency training programs and impose extraordinary new costs to hire attending supervisors to attend to patients with trainees.

Several commenters disagreed with the notion of enrolling as a CMHC in order to receive payment, stating that hospital-based PHPs and CMHCs are inherently different in structure, operation, and reimbursement, and noting that the conditions of participation for hospital departments and CMHCs are different.

Response: Sections 1833(t)(1)(B)(v) and (t)(21) do not exempt PHP services from application of section 603. In response to the commenters who requested that we apply section 1833(t)(2)(E) of the Act to exclude PHP services from application under section 603, while section 1833(t)(2)(E) of the Act does provide fairly broad authority to make ''other adjustments as determined to be necessary to ensure equitable payments,'' we do not believe this authority extends to exempting a class of hospital off-campus PBDs from application of a separate statutory provision specifically prohibiting payment under the OPPS itself. In other words, for these PHP services provided by hospital-based PHPs to which sections 1833(t)(1)(B)(v) and (t)(21) of the Act apply, there would be no OPPS payment to which a payment adjustment could be made.

In addition, we are adopting as final our proposal that the applicable payment system is the MPFS. As noted in the interim final rule with comment period in section X.B. of this document, PHP services are payable to hospitals only under the OPPS. As we have for certain other nonexcepted items and services, we are identifying the MPFS as the applicable payment system for PHP services furnished by a nonexcepted off-campus PBD, and we are setting the MPFS payment rate for these PHP services as the rate that would be paid to a CMHC. Therefore, hospital-based PHPs to which sections 1833(t)(1)(B)(v) and (t)(21) of the Act apply will continue to be able to bill and be paid for the furnishing of those services. Alternatively, as we proposed, these PBDs may choose to enroll as a CMHC in order to continue to provide PHP services and receive Medicare payment. We acknowledge that CMHCs and hospital-based PHPs have differences in structure, operation, and payment, and that there can be advantages to providing PHP care through a hospital-based PHP. In the CY 2017 OPPS/ASC proposed rule (81 FR 45681), we noted that when a beneficiary receives services in an off-campus department of a hospital, the Medicare payment for those services is generally higher than when those same services are provided in a physician's office. Similarly, when partial hospitalization services are provided in a hospital-based PHP, Medicare pays more than when those same services are provided by a CMHC. CMHCs are freestanding providers that are not part of a hospital, and that have lower cost structures than hospital-based PHPs. This is similar to the differences between freestanding entities paid under the MPFS that furnish other services also provided by hospital-based entities. We believe that paying for nonexcepted hospital-based partial hospitalization services at the lower CMHC per diem rate is in alignment with section 603 of Public Law 114–74, while also preserving access to the PHP benefit. As we noted in section VIII.B.1 of this final rule with comment period, Medicare beneficiaries with mental health needs can access outpatient care in a variety of ways, including individual mental health services that are reasonable and medically necessary. Therefore, we believe that beneficiaries will still have access to mental health care.

In regards to the comment that the application of the MPFS to nonexcepted off-campus PBDs would require hospitals to hire additional physicians in order to meet the MPFS supervision requirements, the requirements for supervision are the same whether the PHP is on-campus or off-campus. The amendments made by section 603 of Public Law 114–74 did not change the status of these PBDs; only the status of and payment mechanisms for the services they furnished changed.

Comment: Many commenters stated that it was important that hospitals be able to bill for the facility portion of payment on the institutional claim. These commenters noted that hospital claim systems are designed to utilize the institutional claim and suggested that if CMS proposed that hospitals utilize the practitioner claim for these services, it would represent a significant burden for providers. Some commenters noted that the statute that amended section 1833(t)(21)(D) of the Act to allow the Secretary to collect information from hospitals to implement this provision included the parenthetical phrase ''(which may include reporting of information on a hospital claim using a code or modifier)''; these commenters suggested that this parenthetical phrase indicates that Congress envisioned that nonexcepted items and services would be billed on a hospital claim. Commenters inquired whether and how nonexcepted items and services would be included in the 3-day payment window if the nonexcepted items and services were billed on a practitioner claim. Commenters suggested that supplemental payers may have difficulty processing claims that have hospital outpatient services billed on both an institutional claim and a practitioner claim. Commenters also suggested there may be implications for the Health Insurance Portability and Accountability Act (HIPAA) transaction standards if institutional services are billed on a professional claim. Some commenters noted that if nonexcepted items and services are not billed on an institutional claim, these services would not appear on Provider Statistical and Reimbursement reports. MedPAC and other commenters suggested that nonexcepted items and services should be included on hospital cost reports because CMS has indicated that it will view nonexcepted off-campus PBDs as part of the hospital.

Response: We thank commenters for their feedback. We do not interpret section 1833(t)(21)(D) of the Act to mean that the statute requires that nonexcepted items and services be billed on an institutional claim. Rather, it explicitly provides the Secretary the authority to collect data from hospitals for purposes of implementing section 603 through means such as a modifier on the hospital claim. As discussed in the interim final rule with comment period, we are implementing a policy that will allow hospitals to identify and bill for nonexcepted items and services on the institutional claim with HCPCS modifier ''PN''. Hospital outpatient services identified with the modifier will continue to be reflected on Provider Statistical and Reimbursement reports. We believe implementation of this policy will obviate the commenters' concerns with the possibility that facility costs for nonexcepted items and services would not be billed and reflected as reimbursable costs on the Medicare hospital cost report.

Comment: Several commenters requested that specific services paid under the OPPS be exempt from application of this provision, either because the service is most commonly performed in the outpatient setting or because of the importance of the service.

Response: We thank the commenters for their feedback. We do not believe the statute allows us to exempt items and services from application of this provision unless the items or services are specifically mentioned in section 1833(t)(21) of the Act as exempt from application of this provision, such as those furnished in a dedicated ED. We reiterate that we are adopting MPFS rates for nonexcepted items and services in the interim final rule with comment period in section X.B. of this document. We refer readers to the interim final rule with comment period for details on payment for various categories of items and services.

Comment: Many commenters requested that CMS clarify how payment for laboratory services and Part B drugs would be made for nonexcepted items and services.

Response: As discussed in the interim final rule with comment period in section X.B. of this document, laboratory services that are separately paid under the CLFS under standard OPPS policy will be separately paid under the CLFS. Laboratory services that are packaged under standard OPPS policy will continue to be packaged under the newly established MPFS rate for nonexcepted items and services. Part B drugs that are separately payable under the OPPS will still be paid separately under the newly established policy using the Part B drug pricing methodologies under sections 1842(o) and 1847A of the Act. That is, in accordance with a longstanding policy rather than a statutory requirement, we generally pay separately payable Part B drugs at ASP + 6 percent. Drugs that are packaged into OPPS services are not separately paid under the current OPPS rates and will not be separately paid under the newly established MPFS rates.

Comment: Many commenters noted that the proposed rule did not specifically address whether nonexcepted off-campus PBDs would be eligible as ''child sites'' under HRSA's 340B drug program. These commenters noted that, under the proposal, most nonexcepted items and services would not be billed on the institutional claim and therefore would not automatically be recorded as a reimbursable cost center on the cost report, which under HRSA's methodology would make them eligible for the 340B drug program. Most of these commenters indicate that nothing in section 603 mentions the 340B drug program and that, as a result, the 340B drug program should not be affected by the implementation of section 603. These commenters suggested that CMS specifically indicate in the final rule that we do not intend for implementation of section 603 to affect the 340B drug program. Other commenters suggested that the intention of the statute was to remove incentives to provide care in the outpatient setting that could be provided in a physician's office, and thus that CMS indicate that nonexcepted off-campus PBDs should not be eligible for the 340B drug program. Some commenters suggested that nonexcepted off-campus PBDs should be considered PBDs of hospitals, but that their costs should not show up as payable on a cost report, and that, as such, they should not be eligible for the 340B drug program.

Response: We note that, under our finalized policy, services provided at nonexcepted off-campus PBDs will continue to be reported on the hospital cost report. We refer interested parties to HRSA for questions on when drugs qualify for discounts under the 340B program. To the extent that our final payment policies necessitate a change for hospital cost reporting, we will issue guidance, as applicable, in subregulatory guidance.

(3) Comment Solicitation on Allowing Direct Billing and Payment for Nonexcepted Items and Services in CY 2018

In the CY 2017 OPPS/ASC proposed rule (81 FR 45690), for nonexcepted items and services furnished in an off-campus PBD, we solicited public comments on developing a new billing and payment policy proposal for CY 2018. Specifically, we solicited comments regarding whether an off-campus PBD should be allowed to bill nonexcepted items and services on the professional (not institutional) claim and receive payment under the MPFS, provided the off-campus PBD meets all the applicable MPFS requirements. Under this scenario, we envisioned that the PBD would still be considered to be part of the hospital and that the hospital as a whole would continue to be required to meet all applicable conditions of participation and regulations governing its provider-based status, but, for payment purposes, the off-campus PBD would be considered a nonhospital setting that is similar to a freestanding physician office or clinic and that is paid the same rate that is paid to freestanding offices or clinics under the MPFS. We noted that there are other nonpractitioner entities that bill these kinds of services under the MPFS (for example, Independent Diagnostic Testing Facilities, Radiation Treatment Centers), and we sought public comments on whether or not there are administrative impediments for hospitals billing for such services. We sought public comments on whether making the necessary administrative changes that would allow the hospital to bill for these kinds of services under the MPFS would provide any practical benefit to the hospitals relative to the current requirements for billing under the MPFS. We also solicited public comments on other implications or considerations for allowing the hospital to do this, such as how the cost associated with furnishing such services might be reflected on the hospital cost report.

Comment: MedPAC recommended that CMS not create a new provider/supplier type for nonexcepted off-campus PBDs because this would add unnecessary complexity. MedPAC suggested that, instead, CMS continue its proposed 2017 policy of paying the practitioner under the MPFS at the nonfacility rate. Many commenters noted the difficulty providers would have in implementing the proposed temporary payment policy for CY 2017, then adapting their systems to receive facility payments for nonexcepted items and services under the practitioner claim process in CY 2018. Other commenters suggested that CMS include a proposed CY 2018 payment policy for nonexcepted items and services in the CY 2017 final rule, in order for providers to have a better idea of what the CY 2018 payment policy would require while providers are adapting their systems for the CY 2017 payment policy.

Response: We thank commenters for their feedback. As discussed in the interim final rule with comment period in section X.B. of this document, we are implementing a policy that will allow providers to bill for nonexcepted items and services on the institutional claim. We appreciate commenters' feedback about billing for facility costs for nonexcepted items and services on the professional claim. We intend to continue open communication with stakeholders on an ongoing basis and will take these comments into consideration for future rulemaking as we develop and refine the payment mechanisms under the newly established MPFS policies.

4. Beneficiary Cost-Sharing

Under our proposed policy in the CY 2017 OPPS/ASC proposed rule, payment for most nonexcepted items and services under section 1833(t)(21)(C) of the Act would be made under the MPFS to the physician at the nonfacility rate. As a result, the beneficiary cost-sharing for such nonexcepted items and services would

generally be equal to the beneficiary cost-sharing if the service was provided at a freestanding facility.

Comment: Some commenters suggested that if, in CY 2018, CMS provided a way for providers to bill for nonexcepted items and services utilizing a practitioner claim, this may prove to be confusing to beneficiaries, who could then receive up to three bills for copayments: One from the provider for excepted services billed on the institutional claim; one from the provider for nonexcepted services billed on the practitioner claim; and one from the practitioner billed on the practitioner claim.

Response: We thank commenters for their feedback. As discussed earlier, we are implementing a policy that will allow providers to bill for nonexcepted items and services on the institutional claim, and we believe implementation of this policy will obviate the concerns the commenters noted above. We note that, under the interim final rule with comment period in section X.B. of this document, beneficiary cost-sharing will generally be equal to that which applies under the MPFS.

5. Summary of Finalized Policies

Under our finalized policy, all excepted off-campus PBDs will be permitted to continue to bill for the furnishing of excepted items and services under the OPPS. These excepted items and services include those furnished in an ED, in an on-campus PBD, or within the distance from a remote location of a hospital facility. In addition, excepted items and services include those furnished by an off-campus PBD that was billing Medicare for covered OPD services furnished prior to November 2, 2015, the date of enactment of Public Law 114–74, provided that the excepted off-campus PBD does not impermissibly relocate from the same physical address of the PBD on the provider enrollment form as of November 2, 2015 (with limited exceptions for extraordinary circumstances), or experience an impermissible change of ownership (CHOW). That is, an excepted off-campus PBD will lose its status as excepted (that is, the off-campus PBD will be considered a new nonexcepted off-campus PBD) if the excepted off-campus PBD changes location or changes ownership. An off-campus PBD that experiences a CHOW will continue its excepted status only if the new hospital owners acquire the main hospital and adopt the existing Medicare provider agreement.

Items and services furnished in a new nonexcepted off-campus PBD (that is, one that was not billing under the OPPS for covered OPD services furnished prior to November 2, 2015) will be nonexcepted items and services, no longer eligible for payment under the OPPS.

Beginning in CY 2017, the MPFS will be the ''applicable payment system'' for the majority of nonexcepted items and services furnished in an off-campus PBD. Physicians furnishing services in these nonexcepted departments will be paid based on the professional claim and will be paid at the facility rate for services for which they are permitted to bill, consistent with the established policy of applying the MPFS facility rate to the professional when Medicare makes a corresponding payment to the facility for the same service. Provided it can meet all Federal and other requirements, a hospital continues to have the option of enrolling the nonexcepted off-campus PBD as the type of provider/supplier for which it wishes to bill in order to meet the requirements of that payment system (such as an ASC or a group practice).

In response to public comments and due to concerns that our proposed payment policy may result in beneficiaries being unable to access needed medical services and administrative complexities for hospitals and physicians, we have decided to issue an interim final rule with comment period (in section X.B. of this document) to establish new MPFS rates for nonexcepted items and services. Under this final policy, a hospital will bill for nonexcepted items and services on the institutional claim and must identify that such items and services are nonexcepted through use of claim line modifier ''PN.'' This ''PN'' modifier will be used to trigger payment under the newly adopted PFS rates for nonexcepted items and services. Additional details about these payment rates are included in the interim final rule with comment period in section X.B. of this document.

As we and our contractors conduct audits of hospital billing, we and our contractors will examine whether nonexcepted off-campus PBDs are billing correctly for nonexcepted items and services. We expect hospitals to maintain proper documentation showing which individual off-campus PBDs were billing Medicare prior to November 2, 2015, and to make this documentation available to us and our contractors upon request.

6. Changes to Regulations

To implement the provisions of section 1833(t) of the Act, as amended by section 603 of Public Law 114–74, in the CY 2017 OPPS/ASC proposed rule (81 FR 45691), we proposed to amend the Medicare regulations by (a) adding a new paragraph (v) to § 419.22 to specify that, effective January 1, 2017, for cost reporting periods beginning January 1, 2017, excluded from payment under the OPPS are items and services that are furnished by an off-campus provider-based department that do not meet the definition of excepted items and services; and (b) adding a new § 419.48 that sets forth the definition of excepted items and services, and also the definition of ''excepted off-campus provider-based department''.

In response to public comments, we are modifying paragraph (v) of § 419.22 as specified in the interim final rule with comment period under section X.B. of this document and finalizing the addition of a new § 419.48 that sets forth the definition of excepted items and services and off-campus PBDs and codifies the MPFS, generally, as the applicable payment system.

7. Other Technical Clarification Requests

Comment: Several hospitals with high Medicaid populations expressed concern that State Medicaid programs may adopt site neutral payment policies. The commenters acknowledged that the site neutral policies included in the CY 2017 OPPS/ASC proposed rule are focused on the Medicare program, but urged CMS to direct States not to apply site neutral payment policies to State Medicaid programs.

Response: We appreciate the commenters' concern with protecting access to hospital services for Medicaid recipients. As noted earlier, the section 603 provisions amended section 1833(t) of the Act, which authorizes Medicare payment to hospital outpatient departments. Our final policies to implement the amendments made by section 603 will provide a Medicare payment for nonexcepted items and services furnished by nonexcepted off-campus PBDs. We refer commenters to the Center for Medicaid and CHIP Services for questions on similar section 603 provisions for State Medicaid programs.

B. Interim Final Rule With Comment Period: Establishment of Payment Rates Under the Medicare Physician Fee Schedule for Nonexcepted Items and Services Furnished by Nonexcepted Off-Campus Provider-Based Departments of a Hospital

1. Background

This interim final rule with comment period is being issued in conjunction with a final rule discussed under section X.A. of this document which implements section 603 of the Bipartisan Budget Act of 2015 (Pub. L. 114–74). Specifically, this provision amended the OPPS statute at section 1833(t) by amending paragraph (1)(B) and adding a new paragraph (21). Sections 1833(t)(1)(B)(v) and (t)(21) of the Act require that certain items and services furnished in certain off-campus provider-based departments (PBDs) (collectively referenced here as nonexcepted items and services furnished by nonexcepted off-campus PBDs) shall not be considered covered OPD services for purposes of OPPS, and payment for those nonexcepted items and services shall be made ''under the applicable payment system'' beginning January 1, 2017. In the CY 2017 OPPS/ASC proposed rule (81 FR 45681), we proposed to implement section 603, and we proposed that the MPFS would be the ''applicable payment system'' for the majority of the items and services furnished by nonexcepted off-campus PBDs. In this final rule with comment period, we are finalizing that proposal. As such, for purposes of payment for nonexcepted items and services, the applicable payment system is the MPFS. In the CY 2017 OPPS/ASC proposed rule, we noted that, due to concerns with the significant changes that would need to be made to complex Medicare billing and claims systems, we would not be able to operationalize a mechanism to make payment to the off-campus PBD for nonexcepted items and services under a payment system other than the OPPS by January 1, 2017. Therefore, in that proposed rule, we noted that we intended the payment proposal to be a temporary 1-year policy, applicable in CY 2017 only, while we continued to explore operational changes that would allow nonexcepted items and services to be billed by the off-campus PBD under the applicable payment system, which, in the majority of cases, would be the MPFS (81 FR 45687 through 45689).

We are finalizing, with modifications, our proposal to implement section 603 of Public Law 114–74 in the CY 2017 OPPS/ASC final rule with comment period and refer readers to section X.A. of that final rule with comment period for a detailed discussion. As part of that discussion, we indicate that, in response to public comments received on the proposed payment policies for nonexcepted items and services, we are issuing this interim final rule with comment period to establish payment policies under the MPFS for nonexcepted items and services furnished on or after January 1, 2017. We thank commenters for their insightful comments during the proposed rule process and intend to continue open communication with stakeholders on an ongoing basis as we develop and refine the payment mechanisms for CY 2017 and for future years.

The following discussion establishes policies for nonexcepted items and services furnished by nonexcepted off-campus PBDs and billed by hospitals for payment under the MPFS. We are seeking public comments on the new payment mechanisms and rates detailed in this interim final rule with comment period and, based on these comments, will make adjustments as necessary to the payment mechanisms and rates through rulemaking that could be effective in CY 2017.

2. Payment Mechanisms

a. Relevance of the MPFS for Payment for Nonexcepted Items and Services

Under the MPFS, Medicare makes payment to physicians, nonphysician practitioners, and other suppliers for physicians' services as specified in section 1848 of the Act. In accordance with section 1848(b) and (c) of the Act, MPFS payment is based on the relative value of the resources involved in furnishing particular services. Because Medicare makes separate payment under institutional payment systems (such as the OPPS) for the facility costs associated with many of the same services, we establish two different MPFS payment rates for many of these services—one that applies when the service is furnished in a location where a facility bills and is paid for the service under a Medicare payment system other than the MPFS (the facility rate), and another that applies when the billing practitioner or supplier furnishes and bills for the entire service (the nonfacility rate). The nonfacility rate is developed based on the assumption that the practitioner or other supplier typically bears the practice expense costs such as labor, medical supplies, and medical equipment associated with the service. The facility rate is developed based on the assumption that the practitioner or other supplier is not typically bearing the cost of these direct practice expenses, and that the costs of resources such as labor, medical supplies, and medical equipment are borne by another entity to which Medicare makes payment under a different payment system.

When services are furnished in a facility that is paid under the MPFS, other coding and billing mechanisms are used to distinguish between the portion of the service furnished by the practitioner and the portion furnished by the facility. For example, both radiologists and independent diagnostic testing facilities (IDTFs) furnish and are paid for diagnostic imaging tests under the MPFS. Payment under the MPFS for most codes that describe diagnostic imaging tests is, consequently, ''split'' into the professional component and the technical components of the service. The payment for the professional component is based on the practitioner's work involved in furnishing the service and is generally paid at a single rate under the MPFS, regardless of where the service is performed. The payment for the technical component of the service is based on the relative cost of the other resources involved in furnishing the service, such as clinical staff who perform the test, medical equipment, medical supplies, and overhead expenses involved with imaging acquisition; and the technical component payment is only billed and paid when the service is furnished in a setting in which Medicare does not make an institutional payment for the service through another payment system.

For example, an MRI for a beneficiary may be furnished by an IDTF that owns and operates the capital equipment required to furnish the service. This IDTF would bill under the MPFS for its portion of the service furnished (acquiring the image), by submitting a claim using the appropriate HCPCS code describing the test with the ''–TC'' modifier, signifying a bill for the technical component of the service. The interpretation of the same test for the same patient might be furnished by a radiologist who would bill separately under the MPFS for the professional component of the test by submitting a claim using the HCPCS code with the ''26'' modifier, signifying a bill for the professional component of the service. Alternatively, both the professional and the technical components of the test could be furnished at the office of a radiologist who owns and operates the capital equipment. In this case, the radiologist would bill under the MPFS using the same HCPCS code without either of the modifiers, signifying a

''global'' bill for the service that includes both the professional and the technical components of the service. Under the MPFS ratesetting process, this global payment rate is automatically valued as the sum of the relevant professional and technical components. When the imaging acquisition (technical component) is furnished in a setting to which Medicare makes a separate payment to the facility under a payment system other than the MPFS, the technical component is not paid under the MPFS because the practitioner or supplier did not incur the cost of furnishing the technical component. Rather, payment for this component of the service is paid through the other applicable payment system.

Similar to IDTFs, radiation treatment centers are a type of supplier paid under the MPFS for the kinds of services they furnish. However, billing for radiation treatment services hinges on different coding conventions. For radiation treatment services, there are separate HCPCS codes that describe and distinguish the professional aspects of radiation treatment services (such as treatment planning) and the technical aspects of radiation treatment (such as application of the therapeutic radiation). When the radiation treatment delivery is furnished in a setting where Medicare makes a separate payment to the facility under a different payment system, these services are generally not paid under the MPFS because the practitioner or supplier did not incur the cost of furnishing the technical aspects of the service. Rather, payment is made for these services to the facility under the other applicable payment system. In both cases, the coding and billing mechanisms allow for practitioners to be paid for their professional services under the MPFS, and for other billing entities to be paid for their facility services under either the MPFS or another applicable payment system for the portion of the service they furnish.

b. Operational Considerations

When we developed our proposal to identify the MPFS as the applicable payment system for nonexcepted items and services furnished by nonexcepted off-campus PBDs, we recognized that these nonexcepted off-campus PBDs, similar to IDTFs and radiation treatment centers currently paid under the MPFS, furnish certain components of services that are sometimes paid under the MPFS. In addition, similar to IDTFs and radiation treatment centers, these nonexcepted off-campus PBDs likely incur costs that are, in many cases, complementary to the costs of the practitioners who furnish professional services. Consequently, we surveyed the necessary operational changes that would be necessary to allow hospitals to bill directly under the MPFS for these nonexcepted items and services using the same billing mechanisms currently available to IDTFs and radiation treatment centers. We sought to identify the scope of changes that would be required that would allow nonexcepted off-campus PBDs to bill in the same manner as these entities currently bill. After examining the claims processing, cost reporting, and enrollment records changes that would be necessary, we concluded that it would not be possible to implement these billing process modifications for nonexcepted items and services furnished by nonexcepted off-campus PBDs for CY 2017.

After we considered the public comments we received on the payment proposal for CY 2017 which did not provide for direct billing by, or payment to, the nonexcepted off-campus PBDs for their services, we recognized that establishing the MPFS as the ''applicable payment system'' for nonexcepted items and services furnished by nonexcepted off-campus PBDs without implementing simultaneous billing mechanisms for nonexcepted items and services furnished by hospitals under the MPFS may result in significant negative consequences, such as implications under the physician self-referral and anti-kickback laws and existing ''incident to'' regulations, thereby leading to an inability for either the physician or the hospital to bill for certain nonexcepted items and services. While we believe that many of these issues would only be present in the context of the temporary payment policy that we proposed for CY 2017, we were concerned that if we were to finalize the payment proposal without modification, the potential implications of the issues raised by commenters could result in possible access to care issues for Medicare beneficiaries in CY 2017. At the same time, we recognize that many off-campus PBDs that would bill for nonexcepted items and services incur costs involved in furnishing a broader range of services paid under the MPFS than those services provided in IDTFs and radiation therapy centers. Therefore, we determined that it was necessary, for CY 2017, to establish MPFS rates for the technical component of nonexcepted items and services furnished by nonexcepted off-campus PBDs, in order to provide hospitals a mechanism to bill and be paid.

c. General MPFS Coding and Billing Mechanisms

Coding and payment policies under the MPFS have long recognized the differences between the portions of services for which direct costs generally are incurred by practitioners and the portions of services for which direct costs generally are incurred by facilities. At present, the coding and relative value units (RVUs) established for particular groups of services under the MPFS generally reflect such direct cost differences. As described earlier, we establish separate nonfacility and facility RVUs for many HCPCS codes describing particular services paid under the MPFS. For many other services, we establish separate RVUs for the professional component and the technical component of the service described by the same HCPCS code. For yet other services, we establish RVUs for the different HCPCS codes that segregate and describe the discrete professional and technical aspects of particular services.

After consideration of the public comments we received in response to our proposed payment policies for nonexcepted items and services that are subject to sections 1833(t)(1)(B)(v) and (21) of the Act (81 FR 45688 through 45690), we continue to believe that it is currently operationally infeasible for nonexcepted off-campus PBDs to bill under the MPFS for the subset of MPFS services for which there is a separately valued technical component (either through a ''TC'' value or through unique HCPCS codes). In addition, we believe that hospitals that furnish nonexcepted items and services are likely to furnish a broader range of services than other provider or supplier types for which there is currently a separately valued technical component under the MPFS. Therefore, we believe it is necessary for CY 2017 to establish a new set of payment rates under the MPFS that reflects the relative resource costs of furnishing the technical component of a broad range of services to be paid under the MPFS specific to one site of service (the off-campus PBD of a hospital) with packaging (bundling) rules that are significantly different from current MPFS rules.

The variety of coding and billing mechanisms used under the MPFS evolved over time based on the practice patterns of the practitioners and suppliers paid under the MPFS, and we believe that the change in policy to shift payment to these nonexcepted off-campus PBDs from the OPPS to the MPFS similarly requires accommodation of their practice

patterns under the MPFS. Because we are finalizing our proposal to establish the MPFS as the applicable payment system for nonexcepted items and services furnished by nonexcepted off-campus PBDs in section X.A. of the CY 2017 OPPS/ASC final rule with comment period, we believe that it is necessary to establish a mechanism for CY 2017 under the MPFS for these entities to bill and be paid under the MPFS for the component of the services they furnish to Medicare beneficiaries. We also believe that, in accordance with the effective date specified in section 603 of Public Law 114–74, this billing mechanism must be effective for January 1, 2017. In accordance with the MPFS, the payment rates under this mechanism should reflect the estimated relative resource costs involved in furnishing these services compared to other MPFS services based on the information we have available to us at this time.

The changes implemented through this interim final rule with comment period are intended to provide a billing mechanism for hospitals to report and be paid for nonexcepted items and services furnished by nonexcepted off-campus PBDs to Medicare beneficiaries in CY 2017. In principle, the coding and billing mechanisms required to make appropriate payment to hospitals are parallel to those currently used to make payment for the technical component of diagnostic tests and for codes that describe technical radiation treatment services. However, hospitals are generally more likely to furnish a wider range of items and services than those items and services for which there currently are separate values for the professional component and the technical component of services under the MPFS. Therefore, the new payment rates for the nonexcepted items and services billed by hospitals under the MPFS will establish a means to report the technical aspect of all applicable items and services under the MPFS, not merely the ones with currently separate values for the component rates.

However, we do not believe that the establishment of these payment mechanisms and rates should be disruptive to other practitioners and suppliers paid under the MPFS for CY 2017. In addition, we note that there is no current payment rate under the MPFS that is based on the existing packaging (bundling) rules for hospitals paid under the OPPS. Therefore, we are not implementing any change to the current payment rules, rates, or mechanisms used by other practitioners and suppliers that bill under the MPFS. Instead, the rates and policies established by this interim final rule with comment period implement a payment mechanism under the MPFS intended to reflect the relative resource costs incurred in furnishing the technical component of services in a specific site of service (the nonexcepted off-campus PBD) using the current packaging policies used in the hospital outpatient setting.

In concept, this new payment rate parallels the current technical component for diagnostic tests furnished under the MPFS and the technical component codes currently used under the MPFS, as well as the facility fees paid under a Medicare institutional payment system, such as the OPPS. However, the payment amounts established under this interim final rule with comment period are intended to reflect the estimated relative resource costs of furnishing services only under the MPFS using the packaging rules unique to the hospital outpatient setting.

Because section 603 of Public Law 114–74 did not change the fact that nonexcepted off-campus PBDs are still departments of a hospital, despite no longer being able to be paid under the OPPS for nonexcepted items and services, and in order to implement the statutory payment changes by the effective date of section 603 of Public Law 114–74 of January 1, 2017, we believe it is appropriate to establish a mechanism to allow nonexcepted off-campus PBDs that furnish nonexcepted items and services to bill in the same way as other hospital outpatient departments through use of the institutional claims processing systems in order to be paid under the MPFS for CY 2017. That is, nonexcepted off-campus PBDs will continue to bill on the institutional claim that will pass through the Outpatient Code Editor and into the OPPS PRICER for calculation of payment under the MPFS. It is not operationally feasible to revise the Multi-Carrier System (MCS), which is used to process professional claims, to accept and process institutional claims by January 1, 2017. We also considered adopting a mechanism whereby the hospital would bill under the MPFS on the professional claim, but due to operational challenges that are not possible to adequately address by January 1, 2017, we are not adopting such a policy in this interim final rule with comment period. In addition, as described later in this interim final rule with comment period, we believe it is necessary for now to apply to the payments for nonexcepted items and services the same hospital wage index that would otherwise apply if the off-campus PBD was billing for excepted items and services. Therefore, we are implementing a set of MPFS payment rates that are specific to and can only be reported by hospitals reporting nonexcepted items and services on the institutional claim form in CY 2017.

We also are making a conforming change to our regulations at 42 CFR 414.22(b)(5)(ii) by deleting the paragraph that limits the number of practice expense RVUs that can be applied for services that have only technical component practice expense RVUs or only professional component practice expense RVUs; evaluation and management services, such as hospital or nursing facility visits, that are furnished exclusively in one setting; and major surgical services.

3. Establishment of Payment Rates

We have long acknowledged our concerns regarding some of the information currently used to develop RVUs for payment rates under the MPFS (for example, in the CY 2015 MPFS final rule with comment period (79 FR 67568)). We believe that, for nonexcepted items and services furnished by an off-campus PBD, the quality of the data currently used to develop payment rates under the OPPS, including hospital claims data and cost reporting, far exceeds the quality of data currently used for MPFS payments. In fact, the narrower the gap between the OPPS and MPFS packaging and billing rules and/or the better we are able to estimate the effect of that gap, the greater the potential would be to utilize the OPPS data in the MPFS ratesetting in future years. Nevertheless, it is not currently appropriate to use the OPPS data for services furnished, for example, in physicians' offices, given the significant differences in packaging and billing rules that remain in place, and the fact that we have not yet sufficiently been able to estimate the effect of those differences.

However, given that for CY 2017 we are implementing a set of MPFS payment rates that are specific to and can only be reported by hospitals reporting nonexcepted items and services on the institutional claim form, we do believe it would be appropriate to use the OPPS data to establish code-level relativity between these services when furnished in hospital outpatient departments. Given the current superiority of the OPPS data for these services, and its straightforward applicability when used in conjunction with the OPPS packaging and billing rules, we are establishing a payment mechanism for CY 2017 under the MPFS that, at the code level, is based on

the relative payment rates and packaging and billing rules for these services as paid under the OPPS. However, the mechanism will only use the OPPS payment rates to the extent that they serve to establish appropriate payment under the MPFS based on the relative resources involved, in accordance with those packaging rules. Similarly, there are specific policies and adjustments that currently apply under the OPPS that we are incorporating into the MPFS, exclusively for this site-specific payment rate. In other words, in order to maintain the integrity of the code-specific relativity of current payments under the OPPS as we shift payment for services furnished by nonexcepted off-campus PBDs to the MPFS, we are adopting under the MPFS a set of OPPS payment adjustments as MPFS policies for these payments. We believe this will maintain the code-level relativity that is essential to the MPFS and provide an operational means to implement the amendments made by section 603 of Public Law 114–74 by making payment to hospitals for these nonexcepted items and services furnished.

However, establishing the relativity among the nonexcepted items and services billed by hospitals under the MPFS is only one aspect of establishing the necessary relativity of these services under the MPFS more broadly. We still need to estimate the relativity of these services compared to MPFS services furnished in other settings. In other words, we need to make our current best estimate of the more general relativity between the technical component of MPFS services furnished in nonexcepted off-campus PBDs and all other MPFS services furnished in other settings. As described more fully below, using the limited information available to us at this time, we estimate that, for CY 2017, scaling the OPPS payment rates by 50 percent will strike an appropriate balance that avoids potentially underestimating the relative resources involved in furnishing services in nonexcepted off-campus PBDs as compared to the services furnished in other settings for which payment is made under the MPFS. Specifically, we are establishing site-specific rates under the MPFS for the technical component of the broad range of nonexcepted items and services furnished by nonexcepted off-campus PBDs to be paid under the MPFS that will be based on the OPPS payment amount for these same services, scaled downward by 50 percent. We discuss below how we arrived at this adjustment percentage for CY 2017.

a. Methodology

We began by analyzing hospital outpatient claims data from January 1 through August 26, 2016, that contained the ''PO'' modifier signifying that they were billed by an off-campus department of a hospital paid under the OPPS other than a remote location, a satellite facility, or a dedicated emergency department (ED). We note that the use of the ''PO'' modifier was a new mandatory reporting policy for CY 2016. In development of this interim final rule with comment period, we analyzed available ''PO'' modifier claims data billed from January through August 2016. We limited our analysis to those claims billed on the 13X Type of Bill because those claims are used for Medicare Part B billing under the OPPS. We then identified the top (most frequently billed) 25 ''major codes'' that were billed by claim line; that is, items and services that were separately payable or conditionally packaged. Specifically, we restricted our analysis to codes with OPPS status indicators'' J1'', ''J2'', ''Q1'', ''Q2'', ''Q3'', ''S'', ''T'', or ''V''. We did not include separately payable drugs or biologicals in this analysis because those drugs or biologicals are paid the same rate whether they are furnished in the physician office setting or the hospital setting, and because we are not adopting a percentage reduction to separately payable drugs and biologicals under this interim final rule with comment period. Similarly, we excluded codes assigned an OPPS status indicator ''A'' because the services described by these codes are already paid at a rate under a fee schedule other than the OPPS and payment for those nonexcepted items and services will not be changed under the rates being established under this interim final rule with comment period. Next, for the same major codes (or analogous codes in the rare instance that different coding applies under the OPPS than the MPFS), we compared the CY 2016 payment rate under the OPPS to a CY 2016 payment rate under the MPFS attributable to the nonprofessional resource costs involved in furnishing the services.

The most frequently billed service with the ''PO'' modifier is described by HCPCS code G0463 (Hospital outpatient clinic visit for assessment and management of a patient), which is paid under APC 5012; the total number of CY 2016 claim lines for this service is approximately 6.7 million as of August 2016. In CY 2016, the OPPS payment rate for APC 5012 is $102.12. Because there are multiple CPT codes (CPT codes 99201 through 99215) used under the MPFS for billing this service, an exact comparison between the $102.12 OPPS payment rate for APC 5012 and the payment rate for a single CPT code billed under the MPFS is not possible. However, for purposes of this analysis, we examined the difference between the nonfacility payment rates and the facility payment rates under the MPFS for CPT codes 99213 and 99214, which are the billing codes for a Level III and a Level IV office visit. While we do not have data to precisely determine the equivalent set of MPFS visit codes to use for the comparison, we believe that, based on the distribution of services billed for the visit codes under the MPFS and the distribution of the visit codes under the OPPS from the last time period the CPT codes were used under the OPPS in CY 2014, these two codes provide reliable points of comparison. For CPT code 99213, the difference between the nonfacility payment rate and the facility payment rate under the MPFS in CY 2016 is $21.86, which is 21 percent of the OPPS payment rate for APC 5012 of $102.12. For CPT code 99214, the difference between the nonfacility payment rate and the facility payment rate under the MPFS in CY 2016 is $29.02, which is 28 percent of the OPPS payment rate for APC 5012. However, we recognize that, due to the more extensive packaging that occurs under the OPPS for services provided along with clinic visits relative to the more limited packaging that occurs under the MPFS for office visits, these payment rates are not entirely comparable.

We then assessed the next 24 major codes most frequently billed on the 13X claim form by hospitals. We removed HCPCS code 36591 (Collection of blood specimen from a completely implantable venous access device) because, under current MPFS policies, the code is used only to pay separately under the MPFS when no other service is on the claim. We also removed HCPCS code G0009 (Administration of Pneumococcal Vaccine) because there is no payment for this code under the MPFS. For the remaining 22 major codes most frequently billed, we estimated the amount that would have been paid to the physician in the office setting under the MPFS for practice expenses not associated with the professional component of the service. As indicated in Table X.B.1. below, this amount reflects (1) the difference between the MPFS nonfacility payment rate and the MPFS facility rate, (2) the technical component, or (3) in instances where payment would have been made only to the facility or only to the

physician, the full nonfacility rate. This estimate ranged from 0.0 percent to 137.8 percent of the OPPS payment rate for a code. Overall, the average (weighted by claim line volume times rate) of the nonfacility payment rate estimate for the MPFS compared to the estimate for the OPPS for the 22 remaining major codes is 45 percent.

TABLE X.B.1—COMPARISON OF CY 2016 OPPS PAYMENT RATE TO CY 2016 MPFS PAYMENT RATE FOR TOP HOSPITAL CODES BILLED USING THE "PO" MODIFIER

HCPCS Code (1)	Code Description (2)	Total Claim Lines (3)	CY 2016 OPPS Payment Rate (4)	CY 2016 Applicable MPFS Technical Payment Amount Estimate (5)	Col (5) as a Percent of OPPS (%) (6)	MPFS Estimate
96372	Injection beneath the skin or into muscle for therapy, diagnosis, or prevention.	338,444	$42.31	$25.42	60.1	Single rate paid exclusively to either practitioner or facility: Full nonfacility rate.
71020	X-ray of chest, 2 views, front and side.	333,203	60.80	16.83	27.7	Technical component: Full nonfacility rate.
93005	Routine electrocardiogram (EKG) with tracing using at least 12 leads.	318,099	55.94	8.59	15.4	Technical component: Full nonfacility rate.
96413	Infusion of chemotherapy into a vein up to 1 hour.	254,704	280.27	136.41	48.7	Single rate paid exclusively to either practitioner or facility: Full nonfacility rate.
93798	Physician services for outpatient heart rehabilitation with continuous EKG monitoring per session.	203,926	103.92	11.10	10.7	Nonfacility rate—Facility rate.
96375	Injection of different drug or substance into a vein for therapy, diagnosis, or prevention.	189,140	42.31	22.56	53.3	Single rate paid exclusively to either practitioner or facility: Full nonfacility rate.
93306	Ultrasound examination of heart including color-depicted blood flow rate, direction, and valve function.	179,840	416.80	165.77	39.8	Technical component: Full nonfacility rate.
77080	Bone density measurement using dedicated X-ray machine.	155,513	100.69	31.15	30.9	Technical component: Full nonfacility rate.
77412	Radiation treatment delivery.	137,241	194.35	267.86	137.8	Technical component (Full nonfacility rate) based on weighted averages for the following MPFS codes: G6011; G6012; G6013; and G6014.
90853	Group psychotherapy	123,282	69.65	0.36	0.5	Nonfacility rate—Facility rate.
96365	Infusion into a vein for therapy, prevention, or diagnosis up to 1 hour.	122,641	173.18	69.82	40.3	Nonfacility rate—Facility rate.
20610	Aspiration and/or injection of large joint or joint capsule.	106,769	223.76	13.96	6.2	Nonfacility rate—Facility rate.
11042	Removal of skin and tissue first 20 sq cm or less.	99,134	225.55	54.78	24.3	Nonfacility rate—Facility rate.
96367	Infusion into a vein for therapy prevention or diagnosis additional sequential infusion up to 1 hour.	98,930	42.31	30.79	72.8	Single rate paid exclusively to either practitioner or facility: Full nonfacility rate.
93017	Exercise or drug-induced heart and blood vessel stress test with EKG tracing and monitoring.	96,312	220.35	39.74	18.0	Technical component: Full nonfacility rate.
77386	Radiation therapy delivery	81,925	505.51	347.30	68.7	Technical component: Nonfacility rate for CPT code G6015 (analogous code used under the MPFS).

TABLE X.B.1—COMPARISON OF CY 2016 OPPS PAYMENT RATE TO CY 2016 MPFS PAYMENT RATE FOR TOP HOSPITAL CODES BILLED USING THE ''PO'' MODIFIER—Continued

HCPCS Code (1)	Code Description (2)	Total Claim Lines (3)	CY 2016 OPPS Payment Rate (4)	CY 2016 Applicable MPFS Technical Payment Amount Estimate (5)	Col (5) as a Percent of OPPS (%) (6)	MPFS Estimate
78452	Nuclear medicine study of vessels of heart using drugs or exercise. multiple studies	79,242	1,108.46	412.82	37.2	Technical component: Full nonfacility rate.
74177	CT scan of abdomen and pelvis with contrast.	76,393	347.72	220.20	63.3	Technical component: Full nonfacility rate.
71260	CT scan chest with contrast.	75,052	236.86	167.21	70.6	Technical component: Full nonfacility rate.
71250	CT scan chest	74,570	112.49	129.61	115.2	Technical component: Full nonfacility rate.
73030	X-ray of shoulder, minimum of 2 views.	71,330	60.80	19.33	31.8	Technical component: Full nonfacility rate.
90834	Psychotherapy, 45 minutes with patient and/or family member.	70,524	125.04	0.36	0.3	Nonfacility rate—Facility rate.
Weighted Average (claim line volume*rate) of the MPFS payment compared to OPPS payment for the 22 major codes:						45.

As noted with the clinic visits, we recognize that there are limitations to our data analysis including that OPPS payment rates include the costs of packaged items or services billed with the separately payable code, and therefore the comparison to rates under the MPFS will not be a one-to-one comparison. Also, we include only a limited number of services, and additional services may have different patterns than the services described here. After considering the payment differentials for major codes billed by off-campus departments of hospitals with the ''PO'' modifier and based on the data limitations of our analysis, we are adopting, with some exceptions noted below, a set of MPFS payment rates that are based on a 50-percent reduction to the OPPS payment rates (inclusive of packaging) for nonexcepted items and services furnished in nonexcepted off-campus PBDs in this interim final rule with comment period. Generally speaking, we arrived at 50 percent by examining the 45-percent rate noted above, the ASC payment rate—which is roughly 55 percent of the OPPS payment rate on average—and the payment rate for the large number of OPPS and MPFS evaluation and management services, as described above. We recognize the equivalent MPFS nonfacility rate may be higher or lower than the percentage reduction we are applying to the OPPS payment rates on a code specific basis. However, we believe that, on the whole, this percentage reduction will not underestimate the overall relativity between the OPPS and the MPFS based on the limited data currently available. We are concerned, however, that this percentage reduction might be too small. For example, if we were able at this time to sufficiently estimate the effect of the packaging differences between the OPPS and MPFS, we suspect that the equivalent portion of MPFS payments for evaluation and management codes, and for MPFS services on average, would likely be less than 50 percent for the same services. We consider this percentage reduction for CY 2017 to be a transitional policy until such time that we have more precise data to better identify and value nonexcepted items and services furnished by nonexcepted off-campus PBDs and billed by hospitals.

There are several significant exceptions to this standard adjustment. For example, for services that are currently paid under the OPPS based on payment rates from other Medicare fee schedules (including the MPFS) on an institutional claim, we will not adjust the current payment rates. These are the items and services assigned status indicator ''A'' in Addendum B to the CY 2017 OPPS/ASC final rule with comment period (which is available via the Internet on the CMS Web site) that will continue to be reported on an institutional claim and paid under the MPFS, the CLFS, or the Ambulance Fee Schedule without a payment reduction. Similarly, drugs and biologicals that are separately payable under the OPPS (identified by status indicator ''G'' or ''K'' in Addendum B to the CY 2017 OPPS/ASC final rule with comment period) will be paid in accordance with section 1847A of the Act (that is, typically ASP + 6 percent), consistent with payment rules in the physician office setting. Drugs and biologicals that are unconditionally packaged under the OPPS and are not separately payable (that is, those drugs and biologicals assigned status indicator of ''N'' in Addendum B to the CY 2017 OPPS/ASC final rule with comment period) will be bundled into the MPFS payment and will not be separately paid to hospitals billing for nonexcepted items and services. The full range of exceptions and adjustments to the otherwise applicable OPPS payment rate that are being adopted in the new MPFS site-of-service payment rates in this interim final rule with comment period are displayed in Table X.B.2. below.

All nonexcepted items and services billed by a hospital on an institutional claim with modifier ''PN'' (Nonexcepted service provided at an off-campus, outpatient, provider-based department of a hospital) will be paid under the MPFS at the rate established in this interim final rule with comment period. Specifically, nonexcepted off-campus PBDs must report modifier ''PN'' on each UB–04 claim line to indicate a nonexcepted item or service, but should otherwise continue to bill as they currently do. There are no billing changes for excepted items and services provided at an off-campus PBDs because these items and services remain covered outpatient department services that are paid under the OPPS.

b. MPFS Relativity Adjuster

If we were to use the payment mechanisms described in this interim final rule with comment period over several years, we would anticipate using Medicare claims data to compare the services paid in this nonexcepted off-campus PBD setting to a similar set of services otherwise paid under the MPFS in other sites of service (office or freestanding center, among others) in order to develop a MPFS relativity adjuster that incorporates the specific mix of services furnished in nonexcepted off-campus PBDs. However, given the lack of data regarding the mix of services currently being furnished in nonexcepted off-campus PBDs, we examined the data that were available to us to estimate a first year MPFS relativity adjuster that we believe best approximates the appropriate measure of relativity without underestimating it. In other words, we conducted several analyses in order to develop a MPFS relativity adjuster that we believe would, in the aggregate, approximate the payment under MPFS rates that would otherwise be applicable without underestimating it, were the necessary alternative coding and billing mechanisms under the MPFS present. In this interim final rule with comment period, we discuss two analyses that were considered in determination of the MPFS relativity adjuster for CY 2017. First, we examined the payment differential between the OPPS and the ASC payment system. Under the ASC payment system, covered surgical procedures furnished in an ASC are paid approximately 55 percent of the amount paid to hospital outpatient departments for performing the same services. Second, we considered the CY 2016 claims reported with the ''PO'' modifier (used to report services at off-campus PBDs under the OPPS). We compared overall payment under the OPPS and the MPFS for clinic visits from a list of the most frequently billed HCPCS codes reported with the ''PO'' modifier and determined the weighted average payment differential for these services. Using the ASC differential and the ''PO'' modifier as points of reference, and taking into account our desire not to underestimate the relativity adjuster for CY 2017, we determined the initial year (CY 2017) MPFS-relativity adjuster to be 50 percent. We intend to continue to study this issue and welcome comments regarding potential future refinements as we gain more experience with these new site-of-service MPFS rates.

c. Geographic Adjustments

For 2017, we are establishing class-specific geographic practice cost indices (GPCIs) under the MPFS exclusively used to adjust these site-specific, technical component rates for nonexcepted items and services furnished in nonexcepted off-campus PBDs. These class-specific GPCIs are parallel to the geographic adjustments made under the OPPS based on the hospital wage index. We believe it is appropriate to adopt the hospital wage index areas for purposes of geographic adjustment because nonexcepted off-campus PBDs are still considered to be part of a hospital and the MPFS payments to these entities will be limited to the subset of PFS services furnished by hospitals. We also believe it is appropriate, as an initial matter for CY 2017, to adopt the actual wage index values for these hospitals in addition to the wage index areas. The MPFS GPCIs that would otherwise currently apply are not based on the hospital wage index areas. Pending further study of this issue for future years, for CY 2017, we are using the authority under section 1848 (e)(1)(B) of the Act to establish a new set of GPCIs for these site-specific, technical component rates that are based both on the hospital wage index areas and the hospital wage index value themselves.

d. Coding Consistency

For most services, the same HCPCS codes are used to describe services paid under both the MPFS and the OPPS. There are two notable exceptions that describe high-volume services. The first of these are evaluation and management services, which are reported under the MPFS using the 5 levels of CPT codes describing new or established patient visits (for a total of 10 codes). However, since CY 2014, these visits have been reported under the OPPS using the single HCPCS code G0463 (Hospital Outpatient Clinic Visit) (78 FR 75042). We are establishing the MPFS payment rate for HCPCS code G0463 based on the OPPS payment rate reduced by the 50 percent MPFS relativity adjuster. Second, several radiation treatment delivery and imaging guidance services also are reported using different codes under the MPFS and the OPPS. CMS established HCPCS Level II ''G'' codes to describe radiation treatment delivery services when furnished in the physician office setting (79 FR 67666 through 67667). However, these HCPCS ''G'' codes are not recognized under the OPPS; rather, CPT codes are used to describe these services when furnished in the HOPD. Both sets of codes were implemented for CY 2015 and were maintained for CY 2016. Under the MPFS, there is a particular statutory provision under section 1848(c)(2)(K) of the Act that requires maintenance of the CY 2016 coding and payment inputs for these services for CY 2017 and CY 2018. Accordingly, the finalized CY 2017 MPFS rates for these services were calculated based on the maintenance of the CY 2016 coding payment inputs. On that basis, we are establishing payment amounts for nonexcepted items and services consistent with the payments that would be made to other facilities under the MPFS. That is, an off-campus PBDs submitting claims for nonexcepted items and services will bill the HCPCS ''G'' codes established under the MPFS to describe radiation treatment delivery procedures. However, the off-campus PBD must append modifier ''PN'' to each applicable claim line for nonexcepted items and services. The payment amount for these services will be set to reflect the technical component rate for the code under the MPFS.

4. OPPS Payment Adjustments

In this interim final rule with comment period, we are adopting the packaging payment rates and multiple procedure payment reduction (MPPR) percentage that apply under the OPPS to establish the MPFS payment rates for nonexcepted items and services furnished by nonexcepted off-campus PBDs and billed by hospitals. That is, the claims processing logic that is used for payments under the OPPS for comprehensive APCs (C–APCs), conditionally and unconditionally packaged items and services, and major procedures will be incorporated into the newly established MPFS rates. We believe it is necessary to incorporate these OPPS payment policies for C–APCs, packaged items and services, and the MPPR in order to effectuate a mechanism for payment for nonexcepted items and services furnished by off-campus PBDs by January 1, 2017. We also believe that this is necessary in order to maintain the integrity of the MPFS relativity adjuster because the adjuster intends to incorporate the differences in these rules under the OPPS and the MPFS rates that would otherwise apply. Hospitals will continue to bill on an institutional claim form that will pass through the Outpatient Code Editor and into the OPPS PRICER for calculation of payment. This approach will yield data based on reported charges for nonexcepted items and services furnished by nonexcepted off-campus PBDs, which can be used to refine MPFS payment rates for these services

in future years should we ultimately determine to continue this policy in future years.

There are several OPPS payment adjustments that we are not adopting in this interim final rule with comment period, including, but not limited to, outlier payments, the rural sole community hospital (SCH) adjustment, the cancer hospital adjustments, transitional outpatient payments, the hospital outpatient quality reporting payment adjustment, and the inpatient hospital deductible cap to the cost-sharing liability for a single hospital outpatient service. We believe these payment adjustments are expressly authorized for, and should be limited to, hospitals that are paid under the OPPS for covered OPD services in accordance with section 1833(t) of the Act.

5. Partial Hospitalization Services

With respect to partial hospitalization programs (PHP) (intensive outpatient psychiatric day treatment programs furnished to patients as an alternative to inpatient psychiatric hospitalization or as a stepdown to shorten an inpatient stay and transition a patient to a less intensive level of care), section 1861(ff)(3)(A) of the Act specifies that a PHP is a program furnished by a hospital, to its outpatients, or by a CMHC. In the CY 2017 OPPS/ASC proposed rule (81 FR 45681), in the discussion of the proposed implementation of section 603 of Public Law 114–74, we noted that because CMHCs also furnish PHP services and are ineligible to be provider-based to a hospital, a nonexcepted off-campus PBD would be eligible for PHP payment if the entity enrolls and bills as a CMHC for payment under the OPPS. We further noted that a hospital may choose to enroll a nonexcepted off-campus PBD as a CMHC, provided it meets all Medicare requirements and conditions of participation (81 FR 45690).

Commenters expressed concern that without a clear payment mechanism for PHP services furnished by nonexcepted off-campus PBDs, access to partial hospitalization services would be limited, and pointed out the critical role PHPs play in the continuum of mental health care. Many commenters believed that Congress did not intend for partial hospitalization services to no longer be paid for by Medicare when such services are furnished by nonexcepted off-campus PBDs. Several commenters disagreed with the notion of enrolling as a CMHC in order to receive payment for PHP services. These commenters stated that hospital-based PHPs and CMHCs are inherently different in structure, operation, and payment, and noted that the conditions of participation for hospital departments and CMHCs are different. Several commenters requested that CMS find a mechanism to pay hospital-based PHPs in nonexcepted off-campus PBDs. Because we share the commenters' concerns, we are adopting payment for nonexcepted items and services furnished by PHP under the MPFS. When billed in accordance with this interim final rule with comment period, these items and services will be paid at the CMHC per diem rate for APC 5853, for providing 3 or more partial hospitalization services per day.

In the CY 2017 OPPS/ASC proposed rule (81 FR 45681), we noted that when a beneficiary receives outpatient services in an off-campus department of a hospital, the total Medicare payment for those services is generally higher than when those same services are provided in a physician's office. Similarly, when partial hospitalization services are provided in a hospital-based PHP, Medicare pays more than when those same services are provided by a CMHC. Our rationale for adopting the CMHC per diem rate for APC 5853 as the MPFS payment amount for nonexcepted PBDs providing PHP services is because CMHCs are freestanding entities that are not part of a hospital, but they provide the same PHP services as hospital-based PHPs. This is similar to the differences between freestanding entities paid under the MPFS that furnish other services also provided by hospital-based entities. Similar to other entities currently paid for their technical component services under the MPFS, we believe CMHCs would typically have lower cost structures than hospital-based PHPs, largely due to lower overhead costs and other indirect costs such as administration, personnel, and security. We believe that paying for nonexcepted hospital-based partial hospitalization services at the lower CMHC per diem rate aligns with section 603 of Public Law 114–74, while also preserving access to PHP services. In addition, nonexcepted off-campus PBDs will not be required to enroll as CMHC in order to bill and be paid for providing partial hospitalization services. However, a nonexcepted off-campus PBD that wishes to provide PHP services may still enroll as a CMHC if it chooses to do so and meets the relevant requirements. Finally, we recognize that because hospital-based PHPs are providing partial hospitalization services in the hospital outpatient setting, they can offer benefits that CMHCs do not have, such as an easier patient transition to and from inpatient care, and easier sharing of health information between the PHP and the inpatient staff.

6. Supervision Rules

The supervision rules that apply for hospitals will continue to apply for off-campus PBDs that furnish nonexcepted items and services. The amendments made by section 603 of Public Law 114–74 did not change the status of these PBDs, only the status of and payment mechanism for the services they furnish. These supervision requirements are defined in 42 CFR 410.27.

7. Beneficiary Cost-Sharing

Under the MPFS, the beneficiary copayment is generally 20 percent of the fee schedule amount, unless it is waived in accordance with the statute. All cost-sharing rules that apply under the MPFS in accordance with section 1848(g) of the Act and section 1866(a)(2)(A) of the Act will continue to apply for all nonexcepted items and services furnished by off-campus PBDs, regardless of the cost-sharing obligation under the OPPS.

8. CY 2018, CY 2019, and Future Years

In this interim final rule with comment period, we are finalizing MPFS payment amounts for a new site of service—nonexcepted off-campus PBDs—for CY 2017. We are seeking public comments on the new payment mechanisms and rates detailed in this interim final rule with comment period and, based on these comments, will make adjustments as necessary to the payment mechanisms and rates through rulemaking that could be effective in CY 2017. Unless we significantly modify the policies set forth in this interim final rule with comment period in response to public comments, we anticipate continuing to use this same method to determine MPFS payment amounts for nonexcepted items and services furnished by nonexcepted off-campus PBDs for CY 2018 in order to allow for the operational changes necessary to design and implement a long-term payment approach for nonexcepted off-campus PBDs under the MPFS.

As we note elsewhere in this interim final rule with comment period and in section X.A. of the CY 2017 OPPS/ASC final rule with comment period, we believe the amendments made to the statute by section 603 of Public Law 114–74 intended to eliminate the Medicare payment incentive for hospitals to purchase physician offices, convert them to off-campus PBDs, and bill under the OPPS for services furnished there. Therefore, we believe the payment policy under this provision

should ultimately equalize payment rates between nonexcepted off-campus PBDs and physician offices to the greatest extent possible, while allowing nonexcepted off-campus PBDs to bill in a straight-forward way for services furnished.

We intend, for CY 2019 and beyond, to adopt an approach similar to the approach that we initially proposed for CY 2017. Under this approach, we would pay nonexcepted off-campus PBDs for their nonexcepted items and services at a MPFS-based rate that would reflect the relative resources involved in furnishing the services. We anticipate that payment amounts under this approach would approximate the amount Medicare would pay under the MPFS to cover facility overhead costs if the same services were furnished in a physician's office. For most services, this MPFS-based rate would equal the nonfacility payment rate under the MPFS minus the facility payment rate under the MPFS for the service in question. For other services for which we do not provide separate payment under the MPFS, if payment is made under OPPS, this MPFS-based rate would equal the MPFS nonfacility rate. For still other services, the technical component rate under the MPFS would serve as the MPFS-based rate. We recognize that certain services are billable under OPPS but not under MPFS; for such services, we would consider the relative resources involved in furnishing them, and we envision a rate similar to the rate that we pay ASCs for similar services. We note that the key advantage to this payment approach is that payment amounts would be nearly equal whether the service is furnished in a nonexcepted off-campus PBD or a physician office. This would address the differences in payment between the two sites of service that now create an incentive for hospitals to purchase and convert physician offices to off-campus PBDs in order to bill under the OPPS. However, to implement such a change, we would need to undertake substantial systems changes in order to both calculate and pay at these MPFS-based rates, and we would need to undertake such systems changes before we could require nonexcepted off-campus PBDs to bill using either the professional or facility claims forms for CY 2019 and beyond. We are seeking public comment on this intended payment approach, which we believe would best accomplish the goal of the section 603 provisions set out for us under the statute as amended by section 603 of Public Law 114–74.

Alternatively, we are seeking public comment on the possibility of continuing to make payment using a methodology similar to that described under this interim final rule with comment period. Under such a methodology, we would pay nonexcepted off-campus PBDs under the MPFS at a percentage of standard OPPS rates that we believe reflects the relative resources involved in furnishing the services; we note that this percentage could be lower or higher than the percentage adopted in this interim final rule with comment period, and we would utilize billing data to the extent they are available, initially from CY 2017 and CY 2018, to determine the appropriate percentage adjustment, and then update the percentage adjustment annually based on the most recently available data, for future years. While in the aggregate we would seek to equalize payment rates between physician offices and nonexcepted off-campus PBDs to the extent appropriate, the rates would not be equal on a procedure-by-procedure basis. Therefore, for certain specialties, service lines, and nonexcepted off-campus PBD types, total Medicare payments for the same services might be either higher or lower when furnished in a nonexcepted off-campus PBD rather than in a physician office. We are concerned that such specialty-specific patterns in payment differentials could result in continued incentives for hospitals to buy certain types of physician offices and convert them to nonexcepted off-campus PBDs. In other words, we are concerned that continuing this type of payment approach indefinitely could create incentives to undertake exactly the behavior we believe Congress intended to avoid. However, continuing a policy similar to the one we are adopting in this interim final rule with comment period would allow hospitals to continue billing through a facility claim form and would allow for continuation of the packaging rules and cost report-based relative payment rate determinations under OPPS, which we believe are preferable to using the current valuation methdologies under the MPFS for nonexcepted items and services furnished by nonexcepted off-campus PBDs. In the future, we also will need to determine how rates established for nonexcepted off-campus PBDs will interact with the MPFS ratesetting methodology, rules, and statutory requirements because these rates would continue to be rates under the MPFS.

We recognize that nonexcepted off-campus PBDs would benefit from knowing our preliminary thoughts regarding a long-term payment approach for CY 2018 and beyond, so that they can conduct long-term planning and begin considering possible operational or organizational changes in response. We are seeking public comment on both the policies established in this interim final rule with comment period and the intended and alternative approaches described above that may be used in future rulemaking.

9. Waiver of Proposed Rulemaking

Under 5 U.S.C. 553(b) of the Administrative Procedure Act (APA), the agency is required to publish a notice of the proposed rule in the **Federal Register** before the provisions of a rule take effect. Similarly, section 1871(b)(1) of the Act requires the Secretary to provide for notice of the proposed rule in the **Federal Register** and provide a period of not less than 60 days for public comment. Section 553(b)(B) of the APA provides for exceptions from the notice and comment requirements; in cases in which these exceptions apply, section 1871(b)(2)(C) of the Act provides for exceptions from the notice and 60-day comment period requirements of the Act as well. Section 553(b)(B) of the APA and section 1871(b)(2)(C) of the Act authorize an agency to dispense with normal rulemaking requirements for good cause if the agency makes a finding that the notice and comment process is impracticable, unnecessary, or contrary to the public interest.

We find that there is good cause to waive the notice and comment requirements under sections 553(b)(B) of the APA and section 1871(b)(2)(C). Section 603 of Public Law 114–74, enacted on November 2, 2015, amended section 1833(t) of the Act. In general, section 603 of Public Law 114–74 provides that certain items and services furnished in certain off-campus PBDs will not be considered covered OPD services for which payment may be made under the OPPS and instead provides that those items and services shall be paid ''under the applicable payment system'' beginning January 1, 2017. Because the amendments to section 1833(t) of the Act at paragraphs (1)(B)(v) and (21) are effective for items and services that would have otherwise been paid through the OPPS beginning January 1, 2017, we proposed to implement these amendments in the CY 2017 OPPS/ASC proposed rule.

We received a significant number of public comments raising concerns with our proposals in the CY 2017 OPPS/ASC proposed rule. Specifically, commenters raised concerns with our proposing the ''applicable payment system'' to be the MPFS, proposing to make no payment to the hospital, and

proposing to make payment only to the physician or practitioner under the MPFS for the services they furnish. We thank the many commenters and acknowledge their valued input throughout the proposed rule process. After consideration of the public comments we received on these proposals included in the CY 2017 OPPS/ASC proposed rule, we have determined that establishing the MPFS as the applicable payment system for nonexcepted items and services furnished by nonexcepted off-campus PBDs without simultaneously implementing billing mechanisms to enable hospitals to bill and be paid under the MPFS may result in a number of negative consequences, such as implications under the physician self-referral and anti-kickback statutes and existing ''incident to'' regulations, thereby possibly leading to an inability for either the physician or the hospital to bill for certain nonexcepted items and services, and potentially, in effect, failing to fully implement the statutory language providing for payment for nonexcepted items and services under the applicable payment system. In addition, the public comments raised concerns that if we chose to finalize the payment proposal without modification, those final policies could result in possible access to care issues for Medicare beneficiaries in CY 2017. Commenters suggested that many nonexcepted off-campus PBDs would have chosen to cease operations rather than attempting to navigate the issues and resolve concerns raised in public comments, and that some of these may have been in otherwise underserved areas. After considering the gravity of concerns raised in public comments on our proposed policy on billing and payment for nonexcepted items and services, we conclude that it is not feasible to finalize the policy we proposed for CY 2017, and for which we provided detailed notice and an opportunity to comment in the CY 2017 OPPS/ASC proposed rule. At the same time, the amendments made by section 603 of Public Law 114–74 require that payment shall be made for these nonexcepted items and services under the applicable payment system other than the OPPS beginning January 1, 2017. As such, because of the potential implications of finalizing some of our proposed policies related to payment for nonexcepted items and services furnished by nonexcepted off-campus PBDs on hospitals, physicians, and beneficiaries, and the statutory requirement that payment shall be made for these items and services under the applicable payment system other than OPPS beginning January 1, 2017, we find that it would be impracticable and contrary to the public interest to undergo notice and comment procedures before finalizing, on an interim basis subject to public comment, a payment policy for these items and services for CY 2017. Therefore, we find good cause to waive the notice of proposed rulemaking as provided under section 1871(b)(2)(C) of the Act and section 553(b)(B) of the APA and to issue this final rule on an interim basis subject to public comment. We are providing a 60-day public comment period as specified in the **DATES** section of this document.

10. Collection of Information Requirements

This document does not impose information collection requirements; that is, reporting, recordkeeping or third-party disclosure requirements. Consequently, there is no need for review by the Office of Management and Budget under the authority of the Paperwork Reduction Act of 1995 (44 U.S.C. 3501 *et seq.*).

11. Response to Comments

Because of the large number of public comments we normally receive on **Federal Register** documents, we are not able to acknowledge or respond to them individually. We will consider all comments we receive by the date and time specified in the **DATES** section of this preamble, and, when we proceed with a subsequent document, we will respond to the comments in the preamble to that document.

12. Regulatory Impact Statement

We estimate that the implementation of section 603 of Public Law 114–74 in this interim final rule with comment period will reduce Medicare Part B expenditures by roughly $50 million in CY 2017. While this is a significantly lower impact than the $330 million reduction estimated for the CY 2017 OPPS proposed rule, this lower impact is primarily the result of changes in technical assumptions regarding the services affected by this provision, and not a result of the change in payment policy. For this interim final rule with comment period, we analyzed OPPS claims data through the first 6 months of CY 2016 that were coded with the ''PO'' modifier to indicate that the service was performed off-campus. Based on this analysis, we have significantly reduced the volume of services that we expect to be affected by this provision. Additionally, the proposed rule estimate included an impact in CY 2017 for lower Medicare Advantage payments due to lower fee-for-service expenditures that result from this provision. For this interim final rule with comment period, we have removed the associated Medicare Advantage impact for CY 2017, as the 2017 Medicare Advantage payment rates were set well before this provision will be implemented. For comparison purposes, if we had finalized the proposed rule policy using these revised assumptions, we would now estimate that the provision would reduce Medicare Part B expenditures by $70 million in CY 2017.

C. Changes for Payment for Film X-Ray

Section 502(b) of Division O, Title V of the Consolidated Appropriations Act, 2016 (Pub. L. 114–113) amended section 1833(t)(16) of the Act by adding new subparagraph (F). New section 1833(t)(16)(F)(i) of the Act provides that, effective for services furnished during 2017 or any subsequent year, the payment under the OPPS for imaging services that are X-rays taken using film (including the X-ray component of a packaged service) that would otherwise be made under the OPPS (without application of subparagraph (F)(i) and before application of any other adjustment) shall be reduced by 20 percent. New section 1833(t)(16)(F)(ii) of the Act provides that payments for imaging services that are X-rays taken using computed radiography (including the X-ray component of a packaged service) furnished during CY 2018, 2019, 2020, 2021, or 2022, that would otherwise be made under the OPPS (without application of subparagraph (F)(ii) and before application of any other adjustment), be reduced by 7 percent, and similarly, if such X-ray services are furnished during CY 2023 or a subsequent year, by 10 percent. New section 1833(t)(16)(F)(iii) of the Act provides that the reductions made under section 1833(t)(16)(F) shall not be considered an adjustment under section 1833(t)(2)(E) of the Act, and shall not be implemented in a budget neutral manner. New section 1833(t)(16)(F)(iv) of the Act instructs the implementation of the reductions in payment set forth in subparagraph (F) through appropriate mechanisms which may include use of modifiers. Below we discuss the implementation of the reduction in payment for imaging services that are X-rays taken using film provided for in section 1833(t)(16)(F)(i) of the Act. We will address the reductions in OPPS payment for imaging services that are X-rays taken using computed radiography technology (including the imaging portion of a service) in future rulemaking.

To implement the provisions of sections 1833(t)(16)(F)(i) of the Act relating to the payment reduction for imaging services that are X-rays taken using film that are furnished during CY 2017 or a subsequent year, in the CY 2017 OPPS/ASC proposed rule (81 FR 45691), we proposed to establish a new modifier to be used on claims, as allowed under the provisions of new section 1833(t)(16)(F)(iv) of the Act. The applicable HCPCS codes describing imaging services that are X-rays taken using film were included in Addendum B to the proposed rule (which is available via the Internet on the CMS Web site). We proposed that, beginning January 1, 2017, hospitals would be required to use this modifier on claims for imaging services that are X-rays taken using film.

Comment: Several commenters requested that the proposal for the new modifier be revised to include language that required registered radiologic technologists to perform all radiography procedures billed within the Medicare system.

Response: We proposed to adopted the new modifier to implement the statutory provisions of sections 1833(t)(16)(F)(i) of the Act relating to the payment reduction for imaging services that are X-rays taken using film that are furnished during CY 2017 or a subsequent year. The statute does not address, nor did we propose to change, the type of professional that is eligible to perform radiography procedures. Accordingly, we believe this comment is outside the scope of the proposed rule.

Comment: Commenters questioned whether facilities such as CAHs and hospitals in the State of Maryland are required to use the modifier to identify imaging services that are X-rays taken using film.

Response: In accordance with section1833(t)(16)(F)(i) of the Act, the payment under the OPPS for imaging services that are X-rays taken using film that would otherwise be made under the OPPS (without application of subparagraph (F)(i) and before application of any other adjustment) shall be reduced by 20 percent. The reduction in payment is not applicable to hospitals that do not bill for payments for services under the OPPS. Therefore the modifier is not required to be used by hospitals that do not receive payments under the OPPS, such as CAHs or hospitals exempted from payment under the OPPS in accordance with section 1814(b)(3) of the Act.

Comment: One commenter requested that certain types of X-ray services, including radiographic-fluoroscopic (R&F) services that combine both radioscopy and radiography in a single examination, vascular imaging services which use radioscopy and do not use CR or film technologies, and mammography imaging services which largely involve the use of digital technology, be considered exempt from payment reductions because these services are not typically performed using traditional X-ray systems.

Response: Section 1833(t)(16)(F)(i) of the Act specifically identifies imaging services that are X-rays and states that payment under the OPPS for imaging services that are X-rays taken using film shall be reduced by 20 percent in CY 2017. Therefore, the use of the proposed modifier is required for all imaging services that are X-rays receiving payment under the OPPS if those X-rays are taken using film. The statute does not provide exemptions to this policy for any imaging services that are X-rays. Therefore, we are not adopting any exemptions in this final rule with comment period.

Comment: One commenter noted that the text of the legislation did not specify which CPT codes will be affected by the proposed policy and that without this information the scope of the policy is ambiguous.

Response: Section 1833(t)(16)(F)(i) of the Act references imaging services that are X-rays taken using film. The use of the proposed modifier and subsequent reduction in payment under the OPPS is applicable to all imaging services that are X-rays taken using film as opposed to other methods. Each of the imaging services that are X-rays, along with all other codes payable under the OPPS, are included in Addendum B to this final rule with comment period.

After consideration of the public comments we received, we are finalizing the use of new modifier, FX, for use on claims for imaging services that are X-rays taken using film that are furnished during CY 2017 and subsequent years. The use of this modifier will result in a 20-percent payment reduction for an imaging service that is an X-ray service taken using film (including the X-ray component of a packaged service), as specified under section 1833(t)(16)(F)(i) of the Act, of the determined OPPS payment amount (without application of subparagraph (F)(i) and before any other adjustments under section 1833(t) of the Act). We note that when payment for an X-ray service taken using film is packaged into the payment for another item or service under the OPPS, no separate payment for the X-ray service taken using film is made. Accordingly, the payment reduction in this instance would be 0 percent (that is, 20 percent of $0).

D. Changes to Certain Scope-of-Service Elements for Chronic Care Management (CCM) Services

In the CY 2016 OPPS/ASC final rule with comment period (80 FR 70450 through 70453), we finalized the CCM scope-of-service elements (as described in the CY 2015 MPFS final rule with comment period (79 FR 67721)) required in order for hospitals to bill and receive OPPS payment for furnishing CCM services. These scope-of-service elements are the same as those required for CCM under the MPFS. In the CY 2017 OPPS/ASC proposed rule (81 FR 45691), we discussed that in the CY 2017 MPFS proposed rule, we proposed some minor changes to certain CCM scope-of-service elements. We proposed that these proposed changes also would apply to CCM services furnished to hospital outpatients under the OPPS. All of the fundamental scope-of-service requirements are remaining intact. An example of these proposed minor changes are that the electronic sharing of care plan information would need to be timely but not necessarily on a 24 hour a day/7 days a week basis, as is currently required. We refer readers to the CY 2017 MPFS final rule with comment period for a detailed discussion of the proposed changes to the scope of service elements for CCM, the public comments received, and the finalized policies.

Comment: Commenters supported CMS' proposed changes to certain CCM scope-of-service elements under the OPPS. One commenter, in support of the proposal, suggested limiting billing for CCM under the OPPS to only those providers who use systems that do not limit information exchange.

Response: We thank commenters for their support. In response to the commenter's suggestion to limit billing for CCM under the OPPS to providers who use systems that do not limit information exchange, we note that we did not propose such a limitation on billing. Therefore, we are not accepting this suggestion but may consider it in future years' rulemaking.

After consideration of the public comments we received, we are finalizing our CY 2017 proposal, without modification, for CY 2017, to apply the changes to certain scope-of-service elements finalized in the CY 2017 MPFS final rule with comment period to CCM services furnished to hospital outpatients under the OPPS.

E. Appropriate Use Criteria for Advanced Diagnostic Imaging Services

Section 218(b) of the Protecting Access of Medicare Act of 2014 (PAMA, Pub. L. 113–93) amended section 1834 of the Act by adding paragraph (q) which directs the Secretary to establish a program to promote the use of appropriate use criteria (AUC) for advanced diagnostic imaging services. The CY 2016 MPFS final rule with comment period (80 FR 71102 through 71116) addressed the initial component of the Medicare AUC program, including specifying applicable AUC and establishing CMS authority to identify clinical priority areas for making outlier determinations. The regulations governing the Medicare AUC program are codified at 42 CFR 414.94. The program's criteria and requirements were established and are being updated as appropriate through the MPFS rulemaking process. While the MPFS is the most appropriate vehicle for this practitioner-based program, we note that ordering practitioners will be required to consult AUC at the time of ordering advanced diagnostic imaging, and imaging suppliers will be required to report information related to such consultations on claims, for all applicable advanced diagnostic imaging services paid under the MPFS, the OPPS, and the ASC payment system. In the CY 2017 OPPS/ASC proposed rule (81 FR 45691), we noted that the CY 2017 MPFS proposed rule included proposed requirements and processes for the second component of the Medicare AUC program, which is the specification of qualified clinical decision support mechanisms (CDSMs) under the program. The CDSM is the electronic tool through which the ordering practitioner consults AUC. It also proposed specific clinical priority areas and exceptions to the AUC consultation and reporting requirements. We refer readers to the CY 2017 MPFS final rule with comment period for further information, including a summarization of any public comments received and the finalized policies for CY 2017.

XI. CY 2017 OPPS Payment Status and Comment Indicators

A. CY 2017 OPPS Payment Status Indicator Definitions

Payment status indicators (SIs) that we assign to HCPCS codes and APCs serve an important role in determining payment for services under the OPPS. They indicate whether a service represented by a HCPCS code is payable under the OPPS or another payment system and also whether particular OPPS policies apply to the code. The complete list of the payment status indicators and their definitions that we are applying for CY 2017 is displayed in Addendum D1 to this final rule with comment period, which is available on the CMS Web site at: *https://www.cms.gov/Medicare/Medicare-Fee-for-Service-Payment/HospitalOutpatientPPS/index.html.* The CY 2017 payment status indicator assignments for APCs and HCPCS codes are shown in Addendum A and Addendum B, respectively, to this final rule with comment period, which are available on the CMS Web site at: *https://www.cms.gov/Medicare/Medicare-Fee-for-Service-Payment/HospitalOutpatientPPS/index.html.*

In the CY 2017 OPPS/ASC proposed rule (81 FR 45692), we proposed revising the current definition of status indicator ''E'' by creating two status indicators, ''E1'' and ''E2,'' to replace status indicator ''E.'' We proposed that status indicator ''E1'' would be specific to items and services not covered by Medicare and status indicator ''E2'' would be exclusive to those items and services for which pricing information or claims data are not available.

Comment: Several commenters supported the proposal to differentiate between Medicare noncovered services (status indicator ''E1'') and services that have not been assigned a payment rate due to lack of pricing information and claims data (status indicator ''E2''). The commenters also recommended that CMS not assign the noncovered I/OCE edit to status indicator ''E2'' services because noncoverage is not the reason for nonpayment of these services.

Response: We appreciate the commenters' support for the proposal. In response to the commenters' recommendation regarding the I/OCE edit, we are assigning edit 13 to status indicator ''E2'' items and services. This edit will result in a line item rejection. A line item rejection is when a line has reached a final disposition with no payment for a reason other than medical necessity under section 1862(a)(1) of the Act.

After consideration of the public comments we received, we are finalizing our proposal, without modification, to use new status indicators ''E1'' and ''E2'' to differentiate between Medicare noncovered services and services that have not been assigned a payment rate due to lack of pricing information and claims data.

B. CY 2017 Comment Indicator Definitions

In the CY 2017 OPPS/ASC proposed rule (81 FR 45692), we proposed to use four comment indicators for the CY 2017 OPPS. Three of these comment indicators, ''CH'', ''NI,'' and ''NP,'' are in effect for CY 2016 and we proposed to continue their use in CY 2017. In the proposed rule, we also proposed to create new comment indicator ''NC'' that would be used in the final rule to flag the HCPCS codes that were assigned to comment indicator ''NP'' in the proposed rule. Codes assigned the ''NC'' comment indicator in the final rule will not be subject to comments to the final rule. We stated in the proposed rule that we believe that this new comment indicator ''NC'' would help hospitals easily identify new HCPCS codes that would have a final payment assignment effective January 1, 2017. The proposed CY 2017 OPPS comment indicators are as follows:

- ''CH''—Active HCPCS code in current and next calendar year, status indicator and/or APC assignment has changed; or active HCPCS code that will be discontinued at the end of the current calendar year.
- ''NI''—New code for the next calendar year or existing code with substantial revision to its code descriptor in the next calendar year as compared to current calendar year, interim APC assignment; comments will be accepted on the interim APC assignment for the new code.
- ''NP''—New code for the next calendar year or existing code with substantial revision to its code descriptor in the next calendar year as compared to current calendar year proposed APC assignment; comments will be accepted on the proposed APC assignment for the new code.
- ''NC''—New code for the next calendar year or existing code with substantial revision to its code descriptor in the next calendar year as compared to current calendar year for which we requested comments in the proposed rule, final APC assignment; comments will *not* be accepted on the final APC assignment for the new code.

We did not receive any public comments regarding the proposed CY 2017 OPPS comment indicators. Therefore, we are adopting, as final, our proposal to continue to use for CY 2017 comment indicators ''CH'', ''NI,'' and ''NP'' that are in effect for CY 2016, and to create new comment indicator ''NC'' that will be used in the final rule to flag the HCPCS codes that were assigned to comment indicator ''NP'' in the proposed rule. The definitions of the

OPPS comment indicators for CY 2017 are listed in Addendum D2 to this final rule with comment period, which is available on the CMS Web site at: *https://www.cms.gov/Medicare/Medicare-Fee-for-Service-Payment/HospitalOutpatientPPS/index.html.*

XII. Updates to the Ambulatory Surgical Center (ASC) Payment System

A. Background

1. Legislative History, Statutory Authority, and Prior Rulemaking for the ASC Payment System

For a detailed discussion of the legislative history and statutory authority related to payments to ASCs under Medicare, we refer readers to the CY 2012 OPPS/ASC final rule with comment period (76 FR 74377 through 74378) and the June 12, 1998 proposed rule (63 FR 32291 through 32292). For a discussion of prior rulemaking on the ASC payment system, we refer readers to the CY 2012 OPPS/ASC final rule with comment period (76 FR 74378 through 74379), the CY 2013 OPPS/ASC final rule with comment period (77 FR 68434 through 68467), the CY 2014 OPPS/ASC final rule with comment period (78 FR 75064 through 75090), the CY 2015 OPPS/ASC final rule with comment period (79 FR 66915 through 66940), and the CY 2016 OPPS/ASC final rule with comment period (80 FR 70474 through 70502).

2. Policies Governing Changes to the Lists of Codes and Payment Rates for ASC Covered Surgical Procedures and Covered Ancillary Services

Under 42 CFR 416.2 and 416.166 of the Medicare regulations, subject to certain exclusions, covered surgical procedures in an ASC are surgical procedures that are separately paid under the OPPS, that would not be expected to pose a significant risk to beneficiary safety when performed in an ASC, and for which standard medical practice dictates that the beneficiary would not typically be expected to require active medical monitoring and care at midnight following the procedure (''overnight stay''). We adopted this standard for defining which surgical procedures are covered under the ASC payment system as an indicator of the complexity of the procedure and its appropriateness for Medicare payment in ASCs. We use this standard only for purposes of evaluating procedures to determine whether or not they are appropriate to be furnished to Medicare beneficiaries in ASCs. We define surgical procedures as those described by Category I CPT codes in the surgical range from 10000 through 69999, as well as those Category III CPT codes and Level II HCPCS codes that directly crosswalk or are clinically similar to procedures in the CPT surgical range that we have determined do not pose a significant safety risk, that we would not expect to require an overnight stay when performed in ASCs, and that are separately paid under the OPPS (72 FR 42478).

In the August 2, 2007 final rule (72 FR 42495), we also established our policy to make separate ASC payments for the following ancillary items and services when they are provided integral to ASC covered surgical procedures: (1) Brachytherapy sources; (2) certain implantable items that have pass-through payment status under the OPPS; (3) certain items and services that we designate as contractor-priced, including, but not limited to, procurement of corneal tissue; (4) certain drugs and biologicals for which separate payment is allowed under the OPPS; and (5) certain radiology services for which separate payment is allowed under the OPPS. In the CY 2015 OPPS/ASC final rule with comment period (79 FR 66932 through 66934), we expanded the scope of ASC covered ancillary services to include certain diagnostic tests within the medicine range of CPT codes for which separate payment is allowed under the OPPS when they are provided integral to an ASC covered surgical procedure. Covered ancillary services are specified in § 416.164(b) and, as stated previously, are eligible for separate ASC payment. Payment for ancillary items and services that are not paid separately under the ASC payment system is packaged into the ASC payment for the covered surgical procedure.

We update the lists of, and payment rates for, covered surgical procedures and covered ancillary services in ASCs in conjunction with the annual proposed and final rulemaking process to update the OPPS and the ASC payment system (§ 416.173; 72 FR 42535). We base ASC payment and policies for most covered surgical procedures, drugs, biologicals, and certain other covered ancillary services on the OPPS payment policies, and we use quarterly change requests (CRs) to update services covered under the OPPS. We also provide quarterly update CRs for ASC covered surgical procedures and covered ancillary services throughout the year (January, April, July, and October). CMS releases new and revised Level II HCPCS codes and recognizes the release of new and revised CPT codes by the AMA and makes these codes effective (that is, the codes are recognized on Medicare claims) via these ASC quarterly update CRs. CMS releases new and revised Category III CPT codes in the July and January CRs. These updates implement newly created and revised Level II HCPCS and Category III CPT codes for ASC payment and update the payment rates for separately paid drugs and biologicals based on the most recently submitted ASP data. New and revised Category I CPT codes, except vaccine codes, are released only once a year and are implemented only through the January quarterly CR update. New and revised Category I CPT vaccine codes are released twice a year and are implemented through the January and July quarterly CR updates. We refer readers to Table 41 in the CY 2012 OPPS/ASC proposed rule for an example of how this process is used to update HCPCS and CPT codes (76 FR 42291).

In our annual updates to the ASC list of, and payment rates for, covered surgical procedures and covered ancillary services, we undertake a review of excluded surgical procedures (including all procedures newly proposed for removal from the OPPS inpatient list), new codes, and codes with revised descriptors, to identify any that we believe meet the criteria for designation as ASC covered surgical procedures or covered ancillary services. Updating the lists of ASC covered surgical procedures and covered ancillary services, as well as their payment rates, in association with the annual OPPS rulemaking cycle is particularly important because the OPPS relative payment weights and, in some cases, payment rates, are used as the basis for the payment of many covered surgical procedures and covered ancillary services under the revised ASC payment system. This joint update process ensures that the ASC updates occur in a regular, predictable, and timely manner.

B. Treatment of New and Revised Codes

1. Background on Current Process for Recognizing New and Revised Category I and Category III CPT Codes and Level II HCPCS Codes

Category I CPT, Category III CPT, and Level II HCPCS codes are used to report procedures, services, items, and supplies under the ASC payment system. Specifically, we recognize the following codes on ASC claims:

- Category I CPT codes, which describe surgical procedures and vaccine codes;
- Category III CPT codes, which describe new and emerging

technologies, services, and procedures; and

• Level II HCPCS codes, which are used primarily to identify items, supplies, temporary procedures, and services not described by CPT codes.

We finalized a policy in the August 2, 2007 final rule (72 FR 42533 through 42535) to evaluate each year all new and revised Category I and Category III CPT codes and Level II HCPCS codes that describe surgical procedures, and to make preliminary determinations during the annual OPPS/ASC rulemaking process regarding whether or not they meet the criteria for payment in the ASC setting as covered surgical procedures and, if so, whether or not they are office-based procedures. In addition, we identify new and revised codes as ASC covered ancillary services based upon the final payment policies of the revised ASC payment system. In prior rulemakings, we refer to this process as recognizing new codes; however, this process has always involved the recognition of new and revised codes. We consider revised codes to be new when they have substantial revision to their code descriptors that necessitate a change in the current ASC payment indicator. To clarify, we refer to these codes as new and revised in this CY 2017 OPPS/ASC final rule with comment period.

We have separated our discussion below based on when the codes are released and whether we proposed to solicit public comments in the CY 2017 OPPS/ASC proposed rule (and respond to those comments in this CY 2017 OPPS/ASC final rule with comment period) or whether we are soliciting public comments in this CY 2017 OPPS/ASC final rule with comment period (and responding to those comments in the CY 2018 OPPS/ASC final rule with comment period).

We note that we sought public comments in the CY 2016 OPPS/ASC final rule with comment period (80 FR 70371 through 70372) on the new and revised Category I and III CPT and Level II HCPCS codes that were effective January 1, 2016. We also sought public comments in the CY 2016 OPPS/ASC final rule with comment period (80 FR 70371) on the new and revised Level II HCPCS codes effective October 1, 2015, or January 1, 2016. These new and revised codes, with an effective date of October 1, 2015, or January 1, 2016, were flagged with comment indicator ''NI'' in Addenda AA and BB to the CY 2016 OPPS/ASC final rule with comment period to indicate that we were assigning them an interim payment status and payment rate, if applicable, which were subject to public comment following publication of the CY 2016 OPPS/ASC final rule with comment period. We are responding to public comments and finalizing the treatment of these codes under the ASC payment system in this CY 2017 OPPS/ASC final rule with comment period.

In Table 43 below, we summarize our process for updating codes through our ASC quarterly update CRs, seeking public comments, and finalizing the treatment of these new codes under the OPPS.

TABLE 43—COMMENT TIMEFRAME FOR NEW OR REVISED HCPCS CODES

ASC Quarterly update CR	Type of code	Effective date	Comments sought	When finalized
April I, 2016	Level II HCPCS Codes	April 1, 2016	CY 2017 OPPS/ASC proposed rule.	CY 2017 OPPS/ASC final rule with comment period.
July 1, 2016	Level II HCPCS Codes	July 1, 2016	CY 2017 OPPS/ASC proposed rule.	CY 2017 OPPS/ASC final rule with comment period.
	Category I (certain vaccine codes) and III CPT codes.	July 1, 2016	CY 2017 OPPS/ASC proposed rule.	CY 2017 OPPS/ASC final rule with comment period.
October 1, 2016	Level II HCPCS Codes	October 1, 2016	CY 2017 OPPS/ASC final rule with comment period.	CY 2018 OPPS/ASC final rule with comment period.
January 1, 2017	Level II HCPCS Codes	January 1, 2017	CY 2017 OPPS/ASC final rule with comment period.	CY 2018 OPPS/ASC final rule with comment period.
	Category I and III CPT Codes	January 1, 2017	CY 2017 OPPS/ASC proposed rule.	CY 2017 OPPS/ASC final rule with comment period.

Note: In the CY 2015 OPPS/ASC final rule with comment period (79 FR 66841 through 66844), we finalized a revised process of assigning APC and status indicators for new and revised Category I and III CPT codes that would be effective January 1. We refer readers to section XII.A.3. of this CY 2017 OPPS/ASC final rule with comment period for further discussion of this issue.

2. Treatment of New and Revised Level II HCPCS Codes and Category III CPT Codes Implemented in April 2016 and July 2016 for Which We Solicited Public Comments in the CY 2017 OPPS/ASC Proposed Rule

In the April 2016 and July 2016 CRs, we made effective for April 1, 2016 and July 1, 2016, respectively, a total of 19 (incorrectly referenced in the proposed rule as 20) new Level II HCPCS codes and 9 new Category III CPT codes that describe covered ASC services that were not addressed in the CY 2016 OPPS/ASC final rule with comment period.

In the April 2016 ASC quarterly update (Transmittal 3478, CR 9557, dated March 11, 2016), we added 10 new drug and biological Level II HCPCS codes to the list of covered ancillary services. Table 23 of the proposed rule listed the new Level II HCPCS codes that were implemented April 1, 2016, along with their proposed payment indicators for CY 2017.

In the July 2016 ASC quarterly update (Transmittal R3531CP, CR 9668, dated May 27, 2016), we added nine new drug and biological Level II HCPCS codes to the list of covered ancillary services. Table 24 of the proposed rule listed the new Level II HCPCS codes that were implemented July 1, 2016. The proposed payment rates, where applicable, for these April and July codes can be found in Addendum BB to the proposed rule (which is available via the Internet on the CMS Web site).

Through the July 2016 quarterly update CR, we also implemented ASC payment for nine new Category III CPT codes as ASC covered surgical procedures, effective July 1, 2016. These codes were listed in Table 25 of the proposed rule, along with their proposed payment indicators. The proposed payment rates for these new Category III CPT codes can be found in Addendum AA to the proposed rule (which is available via the Internet on the CMS Web site).

In the CY 2017 OPPS/ASC proposed rule, we invited public comments on these proposed payment indicators and the proposed payment rates for the new Category III CPT codes and Level II HCPCS codes that were newly

recognized as ASC covered surgical procedures or covered ancillary services in April 2016 and July 2016 through the quarterly update CRs, as listed in Tables 23, 24, and 25 of the proposed rule. We also proposed to finalize their payment indicators and their payment rates in this CY 2017 OPPS/ASC final rule with comment period.

We did not receive any public comments regarding the proposed ASC payment indicators and payment rates. Therefore, we are adopting as final the CY 2017 proposed ASC payment indicators and payment rates for the ASC covered surgical procedures and covered ancillary services described by the new Level II HCPCS codes implemented in April 2016 and July 2016 through the quarterly update CRs as shown below in Tables 44, 45, and 46, respectively. We note that, for the CY 2017 update, the HCPCS Workgroup replaced the temporary drug HCPCS C-codes that were listed in Table 23, 24, and 25 of the proposed rule with permanent HCPCS J-codes effective January 1, 2017. Therefore, we are assigning the replacement HCPCS J-codes to the same payment indicators as their predecessor HCPCS C-codes, as shown in Tables 44, 45, and 46 below. The final CY 2017 ASC payment rates for these codes, where applicable, can be found in ASC Addendum AA and BB of this OPPS/ASC final rule with comment period.

TABLE 44—FINAL CY 2017 PAYMENT INDICATORS FOR THE NEW LEVEL II HCPCS CODES FOR COVERED SURGICAL PROCEDURES OR COVERED ANCILLARY SERVICES IMPLEMENTED ON APRIL 1, 2016

CY 2016 HCPCS Code	CY 2017 HCPCS Code	CY 2017 Long descriptor	Final CY 2017 payment indicator
C9137	J7207	Injection, Factor VIII (antihemophilic factor, recombinant) PEGylated, 1 I.U	K2
C9138	J7209	Injection, Factor VIII (antihemophilic factor, recombinant) (Nuwiq), 1 I.U	K2
C9461	A9515	Choline C 11, diagnostic, per study dose	K2
C9470	J1942	Injection, aripiprazole lauroxil, 1 mg	K2
C9471	J7322	Hyaluronan or derivative, Hymovis, for intra-articular injection, 1 mg	K2
C9472	J9325	Injection, talimogene laherparepvec, 1 million plaque forming units (PFU)	K2
C9473	J2182	Injection, mepolizumab, 1 mg	K2
C9474	J9205	Injection, irinotecan liposome, 1 mg	K2
C9475	J9295	Injection, necitumumab, 1 mg	K2
J7503	J7503	Tacrolimus, extended release, (Envarsus XR), oral, 0.25 mg	K2

TABLE 45—FINAL CY 2017 PAYMENT INDICATORS FOR THE NEW LEVEL II HCPCS CODES FOR COVERED ANCILLARY SERVICES IMPLEMENTED IN JULY 2016

CY 2016 HCPCS Code	CY 2017 HCPCS Code	CY 2017 Long descriptor	Final CY 2017 payment indicator
C9476	J9145	Injection, daratumumab, 10 mg	K2
C9477	J9176	Injection, elotuzumab, 1 mg	K2
C9478	J2840	Injection, sebelipase alfa, 1 mg	K2
C9479	C9479	Instillation, ciprofloxacin otic suspension, 6 mg	K2
C9480	J9352	Injection, trabectedin, 0.1 mg	K2
Q9981	J8670	Rolapitant, oral, 1 mg	K2
Q5102	Q5102	Injection, infliximab, biosimilar, 10 mg	K2
Q9982 *	Q9982	Flutemetamol F18, diagnostic, per study dose, up to 5 millicuries	K2
Q9983 **	Q9983	Florbetaben f18, diagnostic, per study dose, up to 8.1 millicuries	K2

* HCPCS code C9459 (Flutemetamol f18, diagnostic, per study dose, up to 5 millicuries) was deleted on June 30, 2016, and replaced with HCPCS code Q9982 effective July 1, 2016.

** HCPCS code C9458 (Florbetaben f18, diagnostic, per study dose, up to 8.1 millicuries) was deleted on June 30, 2016, and replaced with HCPCS code Q9983 effective July 1, 2016.

TABLE 46—FINAL CY 2017 PAYMENT INDICATORS FOR THE NEW CATEGORY III CPT CODES FOR COVERED SURGICAL PROCEDURES OR COVERED ANCILLARY SERVICES IMPLEMENTED IN JULY 2016

CY 2016 HCPCS Code	CY 2017 HCPCS Code	CY 2017 Long descriptor	Final CY 2017 payment indicator
0437T	0437T	Implantation of non-biologic or synthetic implant (*e.g.,* polypropylene) for fascial reinforcement of the abdominal wall (List separately in addition to primary procedure).	N1
0438T *	0438T	Transperineal placement of biodegradable material, peri-prostatic (via needle), single or multiple, includes image guidance.	G2
0439T	0439T	Myocardial contrast perfusion echocardiography; at rest or with stress, for assessment of myocardial ischemia or viability (List separately in addition to primary procedure).	N1
0440T	0440T	Ablation, percutaneous, cryoablation, includes imaging guidance; upper extremity distal/peripheral nerve.	G2

TABLE 46—FINAL CY 2017 PAYMENT INDICATORS FOR THE NEW CATEGORY III CPT CODES FOR COVERED SURGICAL PROCEDURES OR COVERED ANCILLARY SERVICES IMPLEMENTED IN JULY 2016—Continued

CY 2016 HCPCS Code	CY 2017 HCPCS Code	CY 2017 Long descriptor	Final CY 2017 payment indicator
0441T	0441T	Ablation, percutaneous, cryoablation, includes imaging guidance; lower extremity distal/peripheral nerve.	G2
0442T	0442T	Ablation, percutaneous, cryoablation, includes imaging guidance; nerve plexus or other truncal nerve (*e.g.,* brachial plexus, pudendal nerve).	G2
0443T	0443T	Real time spectral analysis of prostate tissue by fluorescence spectroscopy	G2
0444T	0444T	Initial placement of a drug-eluting ocular insert under one or more eyelids, including fitting, training, and insertion, unilateral or bilateral.	N1
0445T	0445T	Subsequent placement of a drug-eluting ocular insert under one or more eyelids, including re-training, and removal of existing insert, unilateral or bilateral.	N1

*HCPCS code C9743 (Injection/implantation of bulking or spacer material (any type) with or without image guidance (not to be used if a more specific code applies) was deleted on June 30, 2016, and replaced with CPT code 0438T effective July 1, 2016.

3. Process for Recognizing New and Revised Category I and Category III CPT Codes That Will Be Effective January 1, 2017 for Which We Are Responding to Comments in This CY 2017 Final Rule With Comment Period

For new and revised CPT codes effective January 1 that were received in time to be included in the CY 2017 OPPS/ASC proposed rule, we proposed APC and status indicator assignments (81 FR 45695). We are responding to comments and finalizing the APC and status indicator assignments in this OPPS/ASC final rule with comment period. For those new/revised CPT codes that were received too late for inclusion in the OPPS/ASC proposed rule, we indicated that we may either make interim final assignments in the final rule with comment period or possibly use HCPCS G-codes that mirror the predecessor CPT codes and retain the current APC and status indicator assignments for a year until we can propose APC and status indicator assignments in the following year's rulemaking cycle.

For the CY 2017 ASC update, the new and revised CY 2017 Category I and III CPT codes will be effective on January 1, 2017, and can be found in ASC Addendum AA and Addendum BB to this final rule with comment period (which are available via the Internet on the CMS Web site). The new and revised CY 2017 Category I and III CPT codes that were not received in time for inclusion in the proposed rule are assigned to new comment indicator ''NP'' to indicate that the code is new for the next calendar year or the code is an existing code with substantial revision to its code descriptor in the next calendar year as compared to current calendar year and that comments will be accepted on the proposed payment indicator. Further, we remind readers that the CPT code descriptors that appear in Addendum AA and Addendum BB are short descriptors and do not accurately describe the complete procedure, service, or item described by the CPT code. Therefore, we included the 5-digit placeholder codes and their long descriptors for the new and revised CY 2017 CPT codes in Addendum O to the proposed rule (which is available via the Internet on the CMS Web site) so that the public could have time to adequately comment on our proposed payment indicator assignments. The 5-digit placeholder codes were included in Addendum O, specifically under the column labeled ''CY 2017 OPPS/ASC Proposed Rule 5-Digit Placeholder Code,'' to the proposed rule. We indicated that the final CPT code numbers would be included in the CY 2017 OPPS/ASC final rule with comment period. We also noted that not every code listed in Addendum O was subject to comment. For the new/revised Category I and III CPT codes, we requested comments on only those codes that are assigned to comment indicator ''NP.''

Comment: One commenter objected to the proposed assignment of the procedure described by HCPCS code 05X1T (Suprachoroidal injection of a pharmacologic agent (does not include supply of medication)) to payment indicator ''G2.'' The commenter believed that the procedure is similar in procedural complexity, resource utilization, and clinical application to the procedure described by CPT code 67028 (Intravitreal injection of a pharmacologic agent (separate procedure)), which is assigned to payment indicator ''P3.''

Response: We agree with the commenter that the procedure described by HCPCS code 05X1T (which is finalized as CPT code 0465T in this final rule with comment period) is similar to the procedure described by CPT code 67028. Therefore, we are modifying our proposal to assign CPT code 0465T to payment indicator ''P3'' for CY 2017.

After consideration of the public comments we received, we are finalizing, with one modification, the proposed CY 2017 ASC payment indicator assignments for new and revised CPT codes, effective January 1, 2017. We are modifying our proposal and are assigning CPT code 0465T to payment indicator ''P3.'' These final CPT codes with short descriptors only and their final payment indicators are listed in Addendum AA and Addendum BB to this final rule with comment period (which is available via the Internet on the CMS Web site). We also list these CPT codes with long descriptors in Addendum O to this final rule with comment period (which is available via the Internet on the CMS Web site).

4. Process for New and Revised Level II HCPCS Codes That Will Be Effective October 1, 2016 and January 1, 2017 for Which We Are Soliciting Public Comments in This CY 2017 OPPS/ASC Final Rule With Comment Period

As has been our practice in the past, we incorporate those new and revised Level II HCPCS codes that are effective January 1 in the final rule with comment period, thereby updating the OPPS and the ASC payment system for the following calendar year. These codes are released to the public via the CMS HCPCS Web site, and also through the January OPPS quarterly update CRs. In the past, we also released new and revised Level II HCPCS codes that are effective October 1 through the October OPPS quarterly update CRs and

incorporated these new codes in the final rule with comment period, thereby updating the OPPS and the ASC payment system for the following calendar year.

In the CY 2017 OPPS/ASC proposed rule (81 FR 45696), for CY 2017, we proposed to continue our established policy of assigning comment indicator ''NI'' in Addendum B to the OPPS/ASC final rule with comment period to those new and revised Level II HCPCS codes that are effective October 1 and January 1 to indicate that we are assigning them an interim payment status, which is subject to public comment. Specifically, the Level II HCPCS codes that will be effective October 1, 2016, and January 1, 2017, would be flagged with comment indicator ''NI'' in Addendum B to this CY 2017 OPPS/ASC final rule with comment period to indicate that we have assigned the codes an interim OPPS payment status for CY 2017. We are inviting public comments in this CY 2017 OPPS/ASC final rule with comment period on the interim status indicator and APC assignments, and payment rates for these codes that will be finalized in the CY 2018 OPPS/ASC final rule with comment period.

C. Update to the List of ASC Covered Surgical Procedures and Covered Ancillary Services

1. Covered Surgical Procedures

a. Covered Surgical Procedures Designated as Office-Based

(1) Background

In the August 2, 2007 ASC final rule, we finalized our policy to designate as ''office-based'' those procedures that are added to the ASC list of covered surgical procedures in CY 2008 or later years that we determine are performed predominantly (more than 50 percent of the time) in physicians' offices based on consideration of the most recent available volume and utilization data for each individual procedure code and/or, if appropriate, the clinical characteristics, utilization, and volume of related codes. In that rule, we also finalized our policy to exempt all procedures on the CY 2007 ASC list from application of the office-based classification (72 FR 42512). The procedures that were added to the ASC list of covered surgical procedures beginning in CY 2008 that we determined were office-based were identified in Addendum AA to that rule by payment indicator ''P2'' (Office-based surgical procedure added to ASC list in CY 2008 or later with MPFS nonfacility PE RVUs; payment based on OPPS relative payment weight); ''P3'' (Office-based surgical procedures added to ASC list in CY 2008 or later with MPFS nonfacility PE RVUs; payment based on MPFS nonfacility PE RVUs); or ''R2'' (Office-based surgical procedure added to ASC list in CY 2008 or later without MPFS nonfacility PE RVUs; payment based on OPPS relative payment weight), depending on whether we estimated the procedure would be paid according to the standard ASC payment methodology based on its OPPS relative payment weight or at the MPFS nonfacility PE RVU-based amount.

Consistent with our final policy to annually review and update the list of covered surgical procedures eligible for payment in ASCs, each year we identify covered surgical procedures as either temporarily office-based (these are new procedure codes with little or no utilization data that we have determined are clinically similar to other procedures that are permanently office-based), permanently office-based, or nonoffice-based, after taking into account updated volume and utilization data.

(2) Changes for CY 2017 to Covered Surgical Procedures Designated as Office-Based in developing the CY 2017 OPPS/ASC proposed rule, we followed our policy to annually review and update the covered surgical procedures for which ASC payment is made and to identify new procedures that may be appropriate for ASC payment, including their potential designation as office-based. We reviewed CY 2015 volume and utilization data and the clinical characteristics for all covered surgical procedures that are assigned payment indicator ''G2'' (Nonoffice-based surgical procedure added in CY 2008 or later; payment based on OPPS relative payment weight) in CY 2016, as well as for those procedures assigned one of the temporary office-based payment indicators, specifically ''P2,'' ''P3,'' or ''R2'' in the CY 2016 OPPS/ASC final rule with comment period (80 FR 70480 through 70482).

Our review of the CY 2015 volume and utilization data resulted in our identification of one covered surgical procedure, CPT code 0377T (Anoscopy with directed submucosal injection of bulking agent for fecal incontinence), that we believe meets the criteria for designation as office-based. The data indicate that this procedure is performed more than 50 percent of the time in physicians' offices, and we believe that the services are of a level of complexity consistent with other procedures performed routinely in physicians' offices. The CPT code that we proposed to permanently designate as office-based for CY 2017 was listed in Table 26 of the proposed rule (81 FR 45697).

We invited public comment on this proposal.

We did not receive any public comments on this proposal. Therefore, we are finalizing our proposal, without modification, to designate the procedures described by CPT code 0377T as permanently office-based for CY 2017, as set forth in Table 47 below.

TABLE 47—ASC COVERED SURGICAL PROCEDURE NEWLY DESIGNATED AS PERMANENTLY OFFICE-BASED FOR CY 2017

CY 2017 CPT Code	CY 2017 Long descriptor	CY 2016 ASC payment indicator	Final CY 2017 ASC payment indicator *
0377T	Anoscopy with directed submucosal injection of bulking agent for fecal incontinence Esophagoscopy, flexible, transnasal; diagnostic, including collection of specimen(s) by brushing or washing, when performed (separate procedure).	G2	R2

*Final payment indicators are based on a comparison of the rates according to the ASC standard ratesetting methodology and the MPFS proposed rates. Current law specifies a 0.5 percent update to the MPFS payment rates for CY 2017. For a discussion of the MPFS rates, we refer readers to the CY 2017 MPFS final rule with comment period.

We also reviewed CY 2015 volume and utilization data and other information for eight procedures designated as temporary office-based in Tables 64 and 65 in the CY 2016 OPPS/ASC final rule with comment period (80 FR 70480 through 70482). Of these eight procedures, there were very few claims in our data or no claims data for all

eight procedures: CPT code 0299T (Extracorporeal shock wave for integumentary wound healing, high energy, including topical application and dressing care; initial wound); CPT code 0402T (Collagen cross-linking of cornea (including removal of the corneal epithelium and intraoperative pachymetry when performed)); CPT code 10030 (Image-guided fluid collection drainage by catheter (*e.g.,* abscess, hematoma, seroma, lymphocele, cyst), soft tissue (*e.g.,* extremity, abdominal wall, neck), percutaneous); CPT code 64461 (Paravertebral block (PVB) (paraspinous block), thoracic; single injection site (includes imaging guidance, when performed); CPT code 64463 (Paravertebral block (PVB) (paraspinous block), thoracic; continuous infusion by catheter (includes imaging guidance, when performed)); CPT code 65785 (Implantation of intrastromal corneal ring segments); CPT code 67229 (Treatment of extensive or progressive retinopathy, one or more sessions; preterm infant (less than 37 weeks gestation at birth), performed from birth up to 1 year of age (for example, retinopathy of prematurity), photocoagulation or cryotherapy); and CPT code C9800 (Dermal injection procedure(s) for facial lipodystrophy syndrome (LDS) and provision of Radiesse or Sculptra dermal filler, including all items and supplies)), which is being replaced by CPT code G0429 (Dermal filler injection(s) for the treatment of facial lipodystrophy syndrome (lds) (*e.g.,* as a result of highly active antiretroviral therapy)) in this final rule with comment period. Consequently, in the CY 2017 OPPS/ASC proposed rule (81 FR 45697), we proposed to maintain the temporary office-based designations for these eight codes for CY 2017. We listed all of these codes for which we proposed to maintain the temporary office-based designations for CY 2017 in Table 27 of the proposed rule. The procedures for which the proposed office-based designations for CY 2017 are temporary also were indicated by asterisks in Addendum AA to the proposed rule (which is available via the Internet on the CMS Web site).

We invited public comment on this proposal.

We did not receive any public comments on this proposal. Therefore, we are finalizing our proposal, without modification, to designate the eight procedures listed in Table 48 below as temporary office-based for CY 2017.

TABLE 48—CY 2017 PAYMENT INDICATORS FOR ASC COVERED SURGICAL PROCEDURES DESIGNATED AS TEMPORARY OFFICE-BASED IN THE CY 2016 OPPS/ASC FINAL RULE WITH COMMENT PERIOD

CY 2017 CPT Code	CY 2017 Long descriptor	CY 2016 ASC payment indicator*	Final CY 2017 ASC payment indicator**
0299T	Extracorporeal shock wave for integumentary wound healing, high energy, including topical application and dressing care; initial wound.	R2*	R2**
0402T	Collagen cross-linking of cornea (including removal of the corneal epithelium and intraoperative pachymetry when performed).	R2*	R2**
10030	Image-guided fluid collection drainage by catheter (*e.g.,* abscess, hematoma, seroma, lymphocele, cyst), soft tissue (*e.g.,* extremity abdominal wall, neck), percutaneous.	P2*	P2**
64461	Paravertebral block (PVB) (paraspinous block), thoracic; single injection site (includes imaging guidance, when performed).	P3*	P3**
64463	Continuous infusion by catheter (includes imaging guidance, when performed)	P3*	P3**
65785	Implantation of intrastromal corneal ring segments	R2*	P2**
67229	Treatment of extensive or progressive retinopathy, one or more sessions; preterm infant (less than 37 weeks gestation at birth), performed from birth up to 1 year of age (*e.g.,* retinopathy of prematurity), photocoagulation or cryotherapy.	R2*	R2**
G0429***	Dermal injection procedure(s) for facial lipodystrophy syndrome (LDS) and provision of Radiesse or Sculptra dermal filler, including all items and supplies.	R2*	R2**

* If designation is temporary.

** Final payment indicators are based on a comparison of the final rates according to the ASC standard ratesetting methodology and the MPFS final rates. Current law specifies a 0.5 percent update to the MPFS payment rates for CY 2017. For a discussion of the MPFS rates, we refer readers to the CY 2017 MPFS final rule with comment period.

*** HCPCS code G0429 replaces HCPCS code C9800, effective January 1, 2017.

In the CY 2017 OPPS/ASC proposed rule (81 FR 45698), for CY 2017, we proposed to designate certain new CY 2017 codes for ASC covered surgical procedures as temporary office-based, as displayed in Table 28 of the proposed rule. After reviewing the clinical characteristics, utilization, and volume of related procedure codes, we determined that the procedures described by these new CPT codes would be predominantly performed in physicians' offices. However, because we had no utilization data for the procedures specifically described by these new CPT codes, we proposed to make the office-based designations temporary rather than permanent and we will reevaluate the procedures when data become available. The procedures for which the proposed office-based designations for CY 2017 are temporary also were indicated by asterisks in Addendum AA to the proposed rule (which is available via the Internet on the CMS Web site).

We invited public comments on these proposals.

We did not receive any public comments on our proposal. Therefore, for CY 2017, we are finalizing our proposal, without modification, to designate the two new CY 2017 codes for ASC surgical procedures listed in Table 49 as temporary office-based.

TABLE 49—CY 2017 PAYMENT INDICATORS FOR NEW CY 2017 CPT CODES FOR ASC COVERED SURGICAL PROCEDURES DESIGNATED AS TEMPORARY OFFICE-BASED

CY 2017 OPPS/ASC proposed rule 5-digit CMS placeholder code	CY 2017 OPPS/ASC final rule CPT code	CY 2017 Long descriptor	Final CY 2017 ASC payment indicator**
369X1	36901	Introduction of needle(s) and/or catheter(s), dialysis circuit, with diagnostic angiography of the dialysis circuit, including all direct puncture(s) and catheter placement(s), injection(s) of contrast, all necessary imaging from the arterial anastomosis and adjacent artery through entire venous outflow including the inferior or superior vena cava, fluoroscopic guidance, radiological supervision and interpretation and image documentation and report.	P2*
36X41	36473	Endovenous ablation therapy of incompetent vein, extremity, inclusive of all imaging guidance and monitoring, percutaneous, mechanochemical; first vein treated.	P2*

* If designation is temporary.
** Final payment indicators are based on a comparison of the final rates according to the ASC standard ratesetting methodology and the MPFS final rates. Current law specifies a 0.5 percent update to the MPFS payment rates for CY 2017. For a discussion of the MPFS rates, we refer readers to the CY 2017 MPFS final rule with comment period.

b. ASC Covered Surgical Procedures Designated as Device-Intensive—Finalized Policy for CY 2016 and Final Policy for CY 2017

(1) Background

As discussed in the August 2, 2007 final rule (72 FR 42503 through 42508), we adopted a modified payment methodology for calculating the ASC payment rates for covered surgical procedures that are assigned to the subset of OPPS device-dependent APCs with a device offset percentage greater than 50 percent of the APC cost under the OPPS, in order to ensure that payment for the procedure is adequate to provide packaged payment for the high-cost implantable devices used in those procedures. According to that modified ASC payment methodology, we apply the device offset percentage based on the standard OPPS APC ratesetting methodology to the OPPS national unadjusted payment to determine the device cost included in the OPPS payment rate for a device-intensive ASC covered surgical procedure, which we then set as equal to the device portion of the national unadjusted ASC payment rate for the procedure. We then calculate the service (nondevice) portion of the ASC payment for device-intensive procedures by applying the uniform ASC conversion factor to the service portion of the OPPS relative payment weight for the device-intensive procedure. Finally, we sum the ASC device portion and ASC service portion to establish the full payment for the device-intensive procedure under the revised ASC payment system. For CY 2015, we implemented a comprehensive APC policy under the OPPS under which we created C–APCs to replace most of the then-current device-dependent APCs and a few nondevice-dependent APCs under the OPPS, which discontinued the device-dependent APC policy (79 FR 66798 through 66810). We did not implement C–APCs in the ASC payment system.

Therefore, in the CY 2015 OPPS/ASC final rule with comment period (79 FR 66925), we provided that all separately paid covered ancillary services that are provided integral to covered surgical procedures that mapped to C–APCs continue to be separately paid under the ASC payment system instead of being packaged into the payment for the C–APC as under the OPPS. To avoid duplicating payment, we provided that the CY 2015 ASC payment rates for these C–APCs were based on the CY 2015 OPPS relative payments weights that had been calculated using the standard APC ratesetting methodology for the primary service instead of the relative payment weights that were based on the comprehensive bundled service. For the same reason, under the ASC payment system, we also used the standard OPPS APC ratesetting methodology instead of the C–APC methodology to calculate the device offset percentage for C–APCs for purposes of identifying device-intensive procedures and to calculate payment rates for device-intensive procedures assigned to C–APCs. Because we implemented the C–APC policy and, therefore, eliminated device-dependent APCs under the OPPS in CY 2015, we revised our definition of ASC device-intensive procedures to be those procedures that are assigned to any APC (not only an APC formerly designated as device-dependent) with a device offset percentage greater than 40 percent based on the standard OPPS APC ratesetting methodology.

We also provided that we would update the ASC list of covered surgical procedures that are eligible for payment according to our device-intensive procedure payment methodology, consistent with our modified definition of device-intensive procedures, reflecting the APC assignments of procedures and APC device offset percentages based on the CY 2013 OPPS claims and cost report data available for the CY 2015 OPPS/ASC proposed rule and final rule with comment period.

(2) ASC Device-Intensive Designation by HCPCS Code

In CY 2016, we restructured many of the APCs under the OPPS, which resulted in some procedures with significant device costs not being designated device-intensive. In the CY 2016 OPPS/ASC proposed rule (80 FR 39310), we specifically recognized that, in some instances, there may be a surgical procedure that uses a high-cost device but is not assigned to a device-intensive APC. When an ASC covered surgical procedure is not designated as device-intensive, it will be paid under the ASC methodology established for that covered surgical procedure, through either an MPFS nonfacility PE RVU based amount or an OPPS relative payment weight based methodology, depending on the ASC payment indicator assignment.

In response to stakeholder concerns regarding circumstances where procedures with high-cost devices are not classified as device-intensive under the ASC payment system, we solicited public comments in the CY 2016 OPPS/ASC proposed rule, specifically requesting suggestions for alternative methodologies for establishing device-intensive status for ASC covered surgical services (80 FR 39310). We received several comments, which we summarized in the CY 2016 OPPS/ASC

final rule with comment period, and we indicated we would take them into consideration for future rulemaking (80 FR 70484). Among the comments we received, several commenters requested that we calculate device intensity at the HCPCS level because the commenters believed the current method of calculating device intensity at the APC level does not take into account device similarity within an APC.

We believe that it is no longer appropriate to designate ASC device-intensive procedures based on APC assignment because APC groupings of clinically similar procedures do not necessarily factor in device cost similarity. This means that there are some surgical procedures that include high-cost implantable devices that are assigned to an APC with procedures that include the cost of significantly lower-cost devices or no device at all. As a result, the proportion of the APC geometric mean unit cost attributed to implantation of a high-cost device can be underrepresented due to higher claim volume and the lower costs of relatively low-cost device implantation procedures or procedures that do not use an implantable device.

We believe that a HCPCS code-level device offset would be a better representation of a procedure's device cost than an APC-wide average device offset based on the device offset of many procedures. Unlike a device offset calculated at the APC level, which is a weighted average offset for all devices used in all of the procedures assigned to an APC, a HCPCS code-level device offset is calculated using only claims for a single HCPCS code. We believe that such a methodological change would result in a more accurate representation of the cost attributable to implantation of a high-cost device, which would ensure consistent device-intensive designation of procedures with a significant device cost. Further, we believe that a HCPCS code-level device offset would remove an inappropriate device-intensive status for procedures without a significant device cost, but which are granted such status because of the APC assignment.

Therefore, in the CY 2017 OPPS/ASC proposed rule (81 FR 45698 through 45699), for CY 2017, we proposed that a procedure with a HCPCS code-level device offset of greater than 40 percent of the APC costs when calculated according to the standard OPPS APC ratesetting methodology would be designated as ASC device-intensive and would be subject to all of the payment policies applicable to procedures designated as an ASC device-intensive procedure under our established methodology, including our policies on device credits and discontinued procedures. We proposed to revise the regulations at 42 CFR 416.171(b)(2) to redefine device-intensive procedures in accordance with this proposal.

Comment: The majority of commenters supported CMS' proposal to revise the device-intensive procedure designation methodology such that an individual HCPCS code with a device offset greater than 40 percent, regardless of the APC assignment, would be designated as a device-intensive procedure. Among the commenters who supported the proposal, a few requested that CMS lower the ASC device offset threshold to 30 percent to qualify a larger number of ASC procedures as device-intensive.

Response: We appreciate the commenters' support. However, we do not believe that lowering the device offset percentage from 40 percent to 30 percent in the ASC setting only is appropriate. As discussed in the CY 2015 OPPS/ASC final rule with comment period (79 FR 66924), the intent of the device-intensive policy is to align significant device cost percentage in the OPPS with the device-intensive procedures in the ASC payment system. That is, we should not pay more for a device when it is implanted in an ASC than if the same device were implanted in an HOPD. Lowering the ASC device-intensive procedure offset to 30 percent would create a disparity in the number of procedures designated device-intensive in the ASC setting, when compared to the HOPD setting. A lower device offset percentage in the ASC setting would result in more device-intensive procedures, when compared to the HOPD setting and, therefore, would result in a financial incentive to perform certain device-intensive procedures in the ASC setting rather than the HOPD setting. Therefore, for CY 2017, we believe it is not appropriate to lower the ASC device-intensive offset percentage to 30 percent when the OPPS device-intensive offset percentage is 40 percent. We refer readers to section IV.B. of this final rule with comment period for background on the OPPS device-intensive procedure policy.

After consideration of the public comments we received, we are finalizing our proposal, without modification, for CY 2017, to designate all procedures that involve the implantation of a device and that have an individual HCPCS code-level device offset of greater than 40 percent, regardless of the APC assignment, as device-intensive. In addition, we are revising the regulations under 42 CFR 416.171(b)(2) to reflect this finalized policy.

In addition, for new HCPCS codes describing procedures involving the implantation of medical devices that do not yet have associated claims data, we proposed to designate these procedures as device-intensive with a default device offset set at 41 percent until claims data are available to establish the HCPCS code-level device offset for the procedures. This default device offset amount of 41 percent would not be calculated from claims data; instead it would be applied as a default until claims data are available upon which to calculate an actual device offset for the new code. The purpose of applying the 41-percent default device offset to new codes that describe procedures that involve the implantation of medical devices would be to ensure ASC access for new procedures until claims data become available. However, in certain rare instances, for example, in the case of a very expensive implantable device, we may temporarily assign a higher offset percentage if warranted by additional information such as pricing data from a device manufacturer. Once claims data are available for a new procedure involving the implantation of a medical device, the device-intensive designation would be applied to the code if the HCPCS code device offset is greater than 40 percent, according to our proposed policy of determining device-intensive status by calculating the HCPCS code-level device offset. The complete listing of ASC device-intensive procedures was included in Addendum AA to the proposed rule (which is available via the Internet on the CMS Web site).

Comment: Several commenters supported CMS' proposal to apply a default device offset of at least 41 percent to new implant procedures, with the possibility for a higher device offset if supported by device cost. Some commenters asked that CMS specify how additional information can be submitted to CMS, including the deadline for submission and the type of information that can be submitted, for consideration of a higher device offset percentage for a new implant procedure.

Response: We appreciate the commenters' support. Additional information for CMS consideration of an offset percentage higher than the default of 41 percent for new HCPCS codes describing procedures involving the implantation (or in some cases the insertion) of a medical device that do not yet have associated claims data, such as pricing data or invoices from a device manufacturer, may be directed to CMS staff in the Division of Outpatient

Care, Mail Stop C4–01–26, Centers for Medicare and Medicaid Services, 7500 Security Boulevard, Baltimore, MD 21244–1850, or electronically at *ASCPPS@cms.hhs.gov*. Additional information can be submitted prior to the issuance of an OPPS/ASC proposed rule or as a public comment in response to the proposed rule. Device offset percentages for a given year will be established in each year's OPPS/ASC final rule.

After consideration of the public comments we received, we are finalizing our proposal, without modification, for CY 2017 to designate as device-intensive all procedures described by new HCPCS codes involving the implantation of a medical device that do not yet have associated claims data with a default device offset set at 41 percent, until claims data are available to establish the HCPCS code-level device offset for the procedure. For CY 2017, we also are finalizing our proposal, without modification, to temporarily assign a higher offset percentage if warranted by additional information. The complete listing of ASC device-intensive procedures for CY 2017 is included in Addendum AA to this final rule with comment period (which is available via the Internet on the CMS Web site).

(3) Changes to List of ASC Covered Surgical Procedures Designated as Device-Intensive for CY 2017

For CY 2017, in the CY 2017 OPPS/ASC proposed rule (81 FR 45699), we proposed to revise our methodology for designating ASC covered surgical procedures as device-intensive. Specifically, for CY 2017, we proposed to update the ASC list of covered surgical procedures that are eligible for payment according to our device-intensive procedure payment methodology, consistent with our proposed revised definition of device-intensive procedures, reflecting the proposed individual HCPCS code device offset percentages based on CY 2015 OPPS claims and cost report data available for the proposed rule.

The ASC covered surgical procedures that we proposed to designate as device-intensive and would be subject to the device-intensive procedure payment methodology for CY 2017 were included in Addendum AA to the proposed rule (which is available via the Internet on the CMS Web site). The CPT code, the CPT code short descriptor, the proposed CY 2017 ASC payment indicator, the proposed CY 2017 HCPCS code device offset percentage, and an indication of whether the full credit/partial credit (FB/FC) device adjustment policy would apply also were included in Addendum AA to the proposed rule.

We invited public comments on the proposed list of ASC device-intensive procedures.

Comment: One commenter requested that CMS review the proposed device offset percentage for CPT code 43284 (proposed as CPT code 432X1) (Laparoscopy, surgical, esophageal sphincter augmentation procedure, placement of sphincter augmentation device (*i.e.*, magnetic band), including cruroplasty when performed). CPT code 43284 is the replacement code for predecessor HCPCS codes C9737 (Laparoscopy, surgical, esophageal sphincter augmentation with device (*e.g.,* magnetic band)) and 0392T (laparoscopy, surgical, esophageal sphincter augmentation procedure, placement of sphincter augmentation device (*e.g.,* magnetic band)). Therefore, the commenter believed that CY 2015 claims data for HCPCS codes C9737 and 0392T should be used to determine the device offset percentage for CPT code 43284. However, the commenter suggested that CMS used CY 2015 claims data for HCPCS code 0392T only when determining the device offset percentage for CPT code 43284.

Response: We agree with the commenter. Accordingly, for this CY 2017 OPPS/ASC final rule with comment period, we used CY 2015 claims data for HCPCS codes C9737 and 0392T to determine the device offset percentage for CPT code 43284.

Comment: One commenter supported CMS' proposed designation of the procedure described by HCPCS code C9739 (cystourethroscopy with insertion of transprostatic implant; 1 to 3 implants) as device-intensive based on the proposed methodology change to device-intensive designations.

Response: We appreciate the commenter's support.

After consideration of the public comments we received, we are designating the ASC covered surgical procedures displayed in Addendum AA as device-intensive and subject to the device-intensive procedure payment methodology for CY 2017. The CPT code, the CPT code short descriptor, the final CY 2017 ASC payment indicator, the final CY 2017 HCPCS code device offset percentage, and an indication of whether the full credit/partial credit (FB/FC) device adjustment policy will apply, are included in the ASC policy file labeled ''CY 2017 ASC Procedures to which the No Cost/Full Credit and Partial Credit Device Adjustment Policy Applies,'' which is available via the Internet on the CMS Web site at: *https://www.cms.gov/Medicare/Medicare-Fee-for-Service-Payment/ASCPayment/ASC-Policy-Files.html*.

c. Adjustment to ASC Payments for No Cost/Full Credit and Partial Credit Devices

Our ASC payment policy for costly devices implanted in ASCs at no cost/full credit or partial credit, as set forth in § 416.179 of our regulations, is consistent with the OPPS policy that was in effect until CY 2014. The established ASC policy reduces payment to ASCs when a specified device is furnished without cost or with full credit or partial credit for the cost of the device for those ASC covered surgical procedures that are assigned to APCs under the OPPS to which this policy applies. We refer readers to the CY 2009 OPPS/ASC final rule with comment period for a full discussion of the ASC payment adjustment policy for no cost/full credit and partial credit devices (73 FR 68742 through 68744).

As discussed in section IV.B. of the CY 2014 OPPS/ASC final rule with comment period (78 FR 75005 through 75006), we finalized our proposal to modify our former policy of reducing OPPS payment for specified APCs when a hospital furnishes a specified device without cost or with a full or partial credit. Formerly, under the OPPS, our policy was to reduce OPPS payment by 100 percent of the device offset amount when a hospital furnished a specified device without cost or with a full credit and by 50 percent of the device offset amount when the hospital received partial credit in the amount of 50 percent or more (but less than 100 percent) of the cost for the specified device. For CY 2014, we finalized our proposal to reduce OPPS payment for applicable APCs by the full or partial credit a provider receives for a replaced device, capped at the device offset amount.

Although we finalized our proposal to modify the policy of reducing payments when a hospital furnishes a specified device without cost or with full or partial credit under the OPPS, in that final rule with comment period (78 FR 75076 through 75080), we finalized our proposal to maintain our ASC policy for reducing payments to ASCs for specified device-intensive procedures when the ASC furnishes a device without cost or with full or partial credit. Unlike the OPPS, there is currently no mechanism within the ASC claims processing system for ASCs to submit to CMS the actual amount received when furnishing a specified device at full or partial credit. Therefore, under the ASC payment system, we finalized our proposal for

CY 2014 to continue to reduce ASC payments by 100 percent or 50 percent of the device offset amount when an ASC furnishes a device without cost or with full or partial credit, respectively.

In the CY 2017 OPPS/ASC proposed rule (81 FR 45699 through 456700) we proposed to update the list of ASC covered device-intensive procedures, based on the proposed CY 2017 device-intensive definition, which would be subject to the no cost/full credit and partial credit device adjustment policy for CY 2017. Specifically, when a device-intensive procedure is subject to the no cost/full credit or partial credit device adjustment policy and is performed to implant a device that is furnished at no cost or with full credit from the manufacturer, the ASC would append the HCPCS ''FB'' modifier on the line in the claim with the procedure to implant the device. The contractor would reduce payment to the ASC by the device offset amount that we estimate represents the cost of the device when the necessary device is furnished without cost or with full credit to the ASC. We continue to believe that the reduction of ASC payment in these circumstances is necessary to pay appropriately for the covered surgical procedure furnished by the ASC.

For partial credit, we proposed to reduce the payment for implantation procedures that are subject to the no cost/full credit or partial credit device adjustment policy by one-half of the device offset amount that would be applied if a device was provided at no cost or with full credit, if the credit to the ASC is 50 percent or more (but less than 100 percent) of the cost of the new device. The ASC would append the HCPCS ''FC'' modifier to the HCPCS code for a device-intensive surgical procedure that is subject to the no cost/full credit or partial credit device adjustment policy, when the facility receives a partial credit of 50 percent or more (but less than 100 percent) of the cost of a device. To report that the ASC received a partial credit of 50 percent or more (but less than 100 percent) of the cost of a new device, ASCs would have the option of either: (1) Submitting the claim for the device replacement procedure to their Medicare contractor after the procedure's performance but prior to manufacturer acknowledgment of credit for the device, and subsequently contacting the contractor regarding a claim adjustment once the credit determination is made; or (2) holding the claim for the device implantation procedure until a determination is made by the manufacturer on the partial credit and submitting the claim with the ''FC'' modifier appended to the implantation procedure HCPCS code if the partial credit is 50 percent or more (but less than 100 percent) of the cost of the replacement device. Beneficiary coinsurance would be based on the reduced payment amount. As finalized in the CY 2015 OPPS/ASC final rule with comment period (79 FR 66926), to ensure our policy covers any situation involving a device-intensive procedure where an ASC may receive a device at no cost/full credit or partial credit, we apply our FB/FC policy to all device-intensive procedures.

We invited public comments on our proposals to adjust ASC payments for no cost/full credit and partial credit devices.

We did not receive any public comment on these proposals. Therefore, we are finalizing these proposals without modification. Specifically, we will apply the HCPCS FB/FC modifier policy to all device-intensive procedures in CY 2017. The device-intensive procedures for CY 2017 are listed in the ASC policy file labeled ''CY 2017 ASC Procedures to which the No Cost/Full Credit and Partial Credit Device Adjustment Policy Applies'' (referred to as ''ASC device adjustment file'' below), which is available via the Internet on the CMS Web site at: *https://www.cms.gov/Medicare/Medicare-Fee-for-Service-Payment/ASCPayment/ASC-Policy-Files.html*. For CY 2017, we will reduce the payment for the procedures listed in the ASC device adjustment file by the full device offset amount if a device is furnished without cost or with full credit. ASCs must append the HCPCS modifier ''FB'' to the HCPCS code for a surgical procedure listed in the ASC device adjustment file previously mentioned when the device is furnished without cost or with full credit. In addition, for CY 2017, we will reduce the payment for the procedures listed in the ASC device adjustment file by one-half of the device offset amount if a device is provided with partial credit, if the credit to the ASC is 50 percent or more (but less than 100 percent) of the device cost. The ASC must append the HCPCS ''FC'' modifier to the HCPCS code for a surgical procedure listed in the ASC device adjustment file when the facility receives a partial credit of 50 percent or more (but less than 100 percent) of the cost of a device.

d. Additions to the List of ASC Covered Surgical Procedures

We conducted a review of HCPCS codes that currently are paid under the OPPS, but not included on the ASC list of covered surgical procedures, to determine if changes in technology and/or medical practice affected the clinical appropriateness of these procedures for the ASC setting. Based on this review, in the CY 2017 OPPS/ASC proposed rule (81 FR 45700 through 45701), we proposed to update the list of ASC covered surgical procedures by adding eight procedures to the list for CY 2017. We determined that these eight procedures would not be expected to pose a significant risk to beneficiary safety when performed in an ASC, and would not be expected to require active medical monitoring and care of the beneficiary at midnight following the procedure. These codes are add-on codes to procedures that are currently performed in the ASC and describe variations of (including additional instrumentation used with) the base code procedure. Therefore, we proposed to include them on the list of ASC covered surgical procedures for CY 2017.

The eight procedures that we proposed to add to the ASC list of covered surgical procedures, including their HCPCS code long descriptors and proposed CY 2017 payment indicators, were displayed in Table 29 of the proposed rule.

Comment: Several commenters supported the proposal to add the eight codes that were displayed in Table 29 of the proposed rule to the list of ASC covered surgical procedures for CY 2017.

Response: We appreciate the commenters' support.

Comment: Commenters noted that CPT code 22851 (Application of intervertebral biomechanical device(s) (*e.g.,* synthetic cage(s), methlmethacrylate) to vertebral defect or interspace (List separately in addition to code for primary procedure)), which was proposed to be added to the list of ASC covered surgical procedures (81 FR 45701) was deleted by the AMA Editorial Panel in April 2016. These commenters indicated that this code was replaced with the following three new CPT codes, effective January 1, 2017: 22853 (Insertion of interbody biomechanical device(s) (*e.g.,* synthetic cage, mesh) with integral anterior instrumentation for device anchoring (*e.g.,* screws, flanges), when performed, to intervertebral disc space in conjunction with interbody arthrodesis, each interspace (List separately in addition to code for primary procedure); 22854 (Insertion of intervertebral biomechanical device(s) (*e.g.,* synthetic cage, mesh) with integral anterior instrumentation for device anchoring (*e.g.,* screws, flanges), when performed,

to vertebral corpectomy(ies) (vertebral body resection, partial or complete) defect, in conjunction with interbody arthrodesis, each contiguous defect (List separately in addition to code for primary procedure); and 22859 (Insertion of intervertebral biomechanical device(s) (*e.g.,* synthetic cage, mesh, methylmethacrylate) to intervertebral disc space or vertebral body defect without interbody arthrodesis, each contiguous defect (List separately in addition to code for primary procedure)). The commenters requested that the replacement codes for CPT code 22851 be included on the list of ASC covered surgical procedures.

Response: The commenters are correct. CPT code 22851 was deleted effective April 13, 2016, and replaced with CPT codes 22853, 22854, and 22859, effective January 1, 2017. CPT code 22851 was included on the list of codes proposed to be added to the ASC covered surgical procedures list in error. Instead of CPT code 22851, which will be deleted on December 31, 2016, we intended to propose to add CPT codes 22853, 22854, and 22859 to the list of ASC covered surgical procedures. We have included these codes with a payment indicator of ''N1'' in Table 51 below as well as Addendum AA to this final rule with comment period (which is available via the Internet on the CMS Web site). We also have removed these codes from Addendum EE to this final rule with comment period (which is available via the Internet on the CMS Web site) for CY 2017.

Comment: Some commenters requested that CMS establish separate payment for the instrumentation codes, CPT codes 22552, 22840, 22842, and 22845 that were proposed to be added to the list of ASC covered surgical procedures. Commenters also requested separate payment for CPT code 22851, which will be replaced with CPT codes 22853, 22854, and 22859, effective January 1, 2017.

Response: Each of these codes are add-on services to procedures and describe variations of (including additional instrumentation used with) the base code procedure. These codes are assigned to status indicator ''N'' under the OPPS. This status indicator is used to identify items and services packaged into APC payment rates. As noted in the CY 2016 OPPS/ASC final rule with comment period (80 FR 70495), we update the ASC payment rates and make changes to ASC payment indicators as necessary to maintain consistency between the OPPS and ASC payment system regarding the packaged or separately payable status of services. Therefore, these services are assigned payment indicator ''N1'' under the ASC payment system, which identifies a packaged service where no separate payment is made.

Comment: Some commenters requested that CMS include several additional codes that were not proposed in the CY 2017 OPPS/ASC proposed rule on the list of ASC covered surgical procedures for CY 2017. These codes are shown in Table 50 below. One commenter also requested that CMS revise existing ASC regulations to allow unlisted codes to be payable in the ASC setting.

TABLE 50—PROCEDURES REQUESTED BY COMMENTERS FOR ADDITION TO THE CY 2017 LIST OF ASC COVERED SURGICAL PROCEDURES

CY 2017 CPT/HCPCS Code	Short descriptor
00142	Anesth lens surgery.
00170	Anesth procedure on mouth.
00810	Anesth low intestine scope.
0232T	Njx platelet plasma.
17999	Skin tissue procedure.
19307	Mast mod rad.
20930	Sp bone algrft morsel add-on.
21470	Treat lower jaw fracture.
22558*	Lumbar spine fusion.
22585	Additional spinal fusion.
22600*	Neck spine fusion.
22630*	Lumbar spine fusion.
22632*	Spine fusion extra segment.
22633*	Lumbar spine fusion combined.
22634*	Spine fusion extra segment.
22830*	Exploration of spinal fusion.
22846*	Insert spine fixation device.
22849*	Reinsert spinal fixation.
22850*	Remove spine fixation device.
22852*	Remove spine fixation device.
22856	Cerv artific diskectomy.
22858	Second level cer diskectomy.
22864*	Remove cerv artif disc.
22899	Spine surgery procedure.
23470	Reconstruct shoulder joint.
23472*	Reconstruct shoulder joint.
27130*	Total hip arthroplasty.
27132*	Total hip arthroplasty.
27176*	Treat slipped epiphysis.
27412	Autochondrocyte implant knee.
27447*	Total knee arthroplasty.
27457*	Realignment of knee.
27477	Surgery to stop leg growth.
27485	Surgery to stop leg growth.
27486*	Revise/replace knee joint.
27487*	Revise/replace knee joint.
27535*	Treat knee fracture.
27540*	Treat knee fracture.
27702*	Reconstruct ankle joint.
28805	Amputation thru metatarsal.
28899	Foot/toes surgery procedure.
29799	Casting/strapping procedure.
29867	Allgrft implnt knee w/scope.
29868	Meniscal trnspl knee w/scpe.
29999	Arthroscopy of joint.
31599	Larynx surgery procedure.
32551	Insertion of chest tube.
33244	Remove elctrd transvenously.
37191	Ins endovas vena cava filtr.
37193	Rem endovas vena cava filter.
37244	Vasc embolize/occlude bleed.
37799	Vascular surgery procedure.
38207	Cryopreserve stem cells.
38214	Volume deplete of harvest.
38999	Blood/lymph system procedure.
41899	Dental surgery procedure.
43280	Laparoscopy fundoplasty.
43281	Lap paraesophag hern repair.
43499	Esophagus surgery procedure.
43775*	Lap sleeve gastrectomy.
43999	Stomach surgery procedure.
44180	Lap enterolysis.
44705	Prepare fecal microbiota.
44799	Unlisted px small intestine.
44950	Appendectomy.
44970	Laparoscopy appendectomy.
46999	Anus surgery procedure.
47379	Laparoscope procedure liver.
47600*	Removal of gallbladder.
49329	Laparo proc abdm/per/oment.
49659	Laparo proc hernia repair.
49999	Abdomen surgery procedure.
53899	Urology surgery procedure.
54411	Remov/replc penis pros comp.
54417	Remv/replc penis pros compl.
55899	Genital surgery procedure.
57282	Colpopexy extraperitoneal.
57283	Colpopexy intraperitoneal.
57425	Laparoscopy surg colpopexy.
58300	Insert intrauterine device.
60252	Removal of thyroid.
60260	Repeat thyroid surgery.
61782	Scan proc cranial extra.
63035	Spinal disk surgery add-on.
63048	Remove spinal lamina add-on.
63057	Decompress spine cord add-on.
63081*	Remove vert body dcmprn crvl.
64999	Nervous system surgery.
67904	Repair eyelid defect.
90870	Electroconvulsive therapy.
91110	Gi tract capsule endoscopy.
C9600	Perc drug-el cor stent sing.
C9601	Perc drug-el cor stent bran.
C9602	Perc d-e cor stent ather s.
C9604	Perc d-e cor revasc t cabg s.
C9605	Perc d-e cor revasc t cabg b.
C9606	Perc d-e cor revasc w ami s.
C9607	Perc d-e cor revasc chro sin.
G0455	Fecal microbiota prep instil.
L8699	Prosthetic implant nos

*CPT codes on the OPPS inpatient list for CY 2017.

Response: We reviewed all of the codes that the commenters requested for addition to the ASC list of covered surgical procedures. Of the 102 codes requested for addition to the ASC list, we did not consider procedures that are reported by CPT codes that are on the inpatient only list (identified with an asterisk in Table 50 above). The 27 codes that are on the inpatient list for CY 2017 are not eligible for addition to the ASC list of covered surgical procedures (72 FR 42476 through 42486; 42 CFR 416.166).

We do not believe that the remaining 75 procedures described by codes listed in Table 50 should be added to the list for CY 2017 because they do not meet our criteria for inclusion on the list. Under §§ 416.2 and 416.166 of our regulations, subject to certain exclusions, covered surgical procedures

in an ASC are surgical procedures that are separately paid under the OPPS, that would not be expected to pose a significant risk to safety when performed in an ASC, and would not be expected to require active medical monitoring and care of the beneficiary at midnight following the procedure. The criteria used under the revised ASC payment system to identify procedures that would be expected to pose a significant safety risk when performed in an ASC include, but are not limited to, those procedures that: (1) Generally result in extensive blood loss; (2) require major or prolonged invasion of body cavities; (3) directly involve major blood vessels; (4) are generally emergent or life threatening in nature; (5) commonly require systemic thrombolytic therapy; (6) are designated as requiring inpatient care under 42 CFR 419.22(n); (7) can only be reported using a CPT unlisted surgical procedure code; or (8) are otherwise excluded under 42 CFR 411.15 (42 CFR 416.166). Procedures that do not meet the criteria set forth in § 416.166 would not be added to the list of ASC covered surgical procedures. We note that we have evaluated many of these procedures in previous years (79 FR 66918 through 66921; 78 FR 75067 through 75070) and did not add the procedures to the ASC list because of similar concerns regarding beneficiary safety. The commenters provided no specific information regarding the safety of these procedures in the ASC setting.

In response to the request to allow other unlisted codes to be payable in the ASC setting, we note that we have addressed this comment several times in prior rulemaking. We refer readers to the CY 2016 OPPS/ASC final rule with comment period (80 FR 70489) for the most recent response. Our longstanding ASC policy under § 416.166 is that procedures described by all unlisted codes are noncovered in the ASC because we are unable to determine (due to the nondescript nature of unlisted procedure codes) if a procedure that would be reported with an unlisted code would not be expected to pose a significant risk to beneficiary safety when performed in an ASC, and would not be expected to require active medical monitoring and care of the beneficiary at midnight following the procedure. We continue to believe that it would not be appropriate to provide ASC payment for procedures described by unlisted CPT codes in the surgical range, even if payment may be provided under the OPPS. Therefore, we are not adding procedures described by unlisted CPT codes to the list of ASC covered surgical procedures for CY 2017.

After consideration of the public comments we received, we are finalizing our proposal with respect to seven of the eight CPT codes that we proposed to add to the list of ASC covered surgical procedures for CY 2017. We are not adding CPT code 22851 to the list of ASC covered surgical procedures for CY 2017. Instead, in response to public comments, we are adding three additional procedures described by CPT codes 22853, 22854, and 22859 to the list of ASC covered surgical procedures for CY 2017 in this final rule with comment period. In addition, as discussed below, in response to public comments, we removed CPT code 22585 (Arthrodesis, anterior interbody, including disc space preparation, discectomy, osteophytectomy, and decompression of spinal cord and/or nerve roots; each additional interspace (List separately in addition to code for primary procedure)) from the OPPS inpatient list for CY 2017. CPT code 22585 is also an add-on code to procedures that are currently performed in the ASC and describes a variation of (including additional instrumentation used with) the base code procedure. Therefore, we are including the procedure described by CPT code 22585 on the list of ASC covered surgical procedures for CY 2017 as well. Table 51 below displays the 11 procedures that we are adding to the ASC list of covered surgical procedures, including their CPT code long descriptors and final CY 2017 payment indicators.

TABLE 51—ADDITIONS TO THE LIST OF ASC COVERED SURGICAL PROCEDURES FOR CY 2017

CY 2017 CPT code	CY 2017 long descriptor	CY 2017 ASC payment indicator
20936	Autograft for spine surgery only (includes harvesting the graft); local (*e.g.*, ribs, spinous process, or laminar fragments) obtained from the same incision (List separately in addition to code for primary procedure).	N1
20937	Autograft for spine surgery only (includes harvesting the graft); morselized (through separate skin or fascial incision) (List separately in addition to code for primary procedure).	N1
20938	Autograft for spine surgery only (includes harvesting the graft); structural, biocortical or tricortical (through separate skin fascial incision).	N1
22552	Arthrodesis, anterior interbody, including disc space preparation, discectomy, osteophytectomy and decompression of spinal cord and/or nerve roots; cervical C2, each additional interspace (List separately in addition to code for separate procedure).	N1
22840	Posterior non-segmental instrumentation (*e.g.*, Harrington rod technique, pedicle fixation across 1 interspace, atlantoaxial transarticular screw fixation, sublaminar wiring at C1, facet screw fixation).	N1
22842	Posterior non-segmental instrumentation (*e.g.*, Harrington rod technique, pedicle fixation across 1 interspace, atlantoaxial transarticular screw fixation, sublaminar wiring at C1, facet screw fixation).	N1
22845	Anterior instrumentation; 2 to 3 vertebral segments	N1
22853*	Insertion of interbody biomechanical device(s) (*e.g.*, synthetic cage, mesh) with integral anterior instrumentation for device anchoring (*e.g.*, screws, flanges), when performed, to intervertebral disc space in conjunction with interbody arthrodesis, each interspace (List separately in addition to code for primary procedure).	N1
22854*	Insertion of intervertebral biomechanical device(s) (*e.g.*, synthetic cage, mesh) with integral anterior instrumentation for device anchoring (*e.g.*, screws, flanges), when performed, to vertebral corpectomy(ies) (vertebral body resection, partial or complete) defect, in conjunction with interbody arthrodesis, each contiguous defect (List separately in addition to code for primary procedure).	N1
22859*	Insertion of intervertebral biomechanical device(s) (*e.g.*, synthetic cage, mesh, methylmethacrylate) to intervertebral disc space or vertebral body defect without interbody arthrodesis, each contiguous defect (List separately in addition to code for primary procedure).	N1

* Effective January 1 2017, CPT codes 22853, 22854, and 22859 replaced CPT code 22851, which was deleted April 13, 2016 by the AMA Editorial Panel.

As we discussed in the CY 2009 OPPS/ASC final rule with comment period (73 FR 68724), we adopted a policy to include, in our annual evaluation of the ASC list of covered surgical procedures, a review of the procedures that are being proposed for removal from the OPPS inpatient only list for possible inclusion on the ASC list of covered surgical procedures. We proposed to remove the following six procedures described by CPT codes from the OPPS inpatient list for CY 2017: CPT codes 22840, 22842, 22845, 22858, 31584, and 31587. The long descriptors for each of these six CPT procedure codes were included in the proposed rule (81 FR 45678). We evaluated each of the six procedures we proposed to remove for the OPPS inpatient list for CY 2017 according to the criteria for exclusion from the list of ASC covered surgical procedures. After reviewing these procedures, we also proposed to add the procedures described by CPT codes 22840, 22842, and 22845 listed in Table 29 of the proposed rule to the list of ASC covered surgical procedures for CY 2017 (81 FR 45700 through 45701). We proposed to add these three procedures to the list of ASC covered surgical procedures (as well as proposed to remove them from the OPPS inpatient list) for CY 2017 because these procedures are described by add-on codes for procedures that are currently performed in the ASC and describe variations of (including additional instrumentation used with) the base code procedure. Therefore, we expect that the procedures described by these codes can be safely performed in an ASC without the need for an overnight stay.

Regarding the other three procedures that we proposed to remove from the OPPS inpatient list, we believe that procedures described by CPT codes 22858 (Total disc arthroplasty (artificial disc), anterior approach, including discectomy with end plate preparation (includes osteophytectomy for nerve root or spinal cord decompression and microdissection); second level, cervical (List separately in addition to code for primary procedure)), 31584 (Laryngoplasty; with open reduction of fracture), and 31587 (Laryngoplasty, cricoid split) should continue to be excluded from the list of ASC covered surgical procedures. We invited public comments on the continued exclusion of these procedures from the list of ASC covered surgical procedures.

In response to public comments (as discussed in section IX.B. of this final rule with comment period), we also are removing CPT code 22585 from the OPPS inpatient list for CY 2017 (discussed in section IX.B. of this final rule with comment period). CPT code 22585 is also an add-on code to procedures that are currently performed in the ASC and describes a variation of (including additional instrumentation used with) the base code procedure. We also expect that the procedure described by CPT code 22585 can be safely performed in an ASC without the need for an overnight stay. Therefore, we are including the procedure described by CPT code 22585 on the list of ASC covered surgical procedures for CY 2017 as well.

Comment: Commenters supported the proposal to add the procedures described by CPT codes 22840, 22842, and 22845 to the list of ASC covered surgical procedures. Commenters also requested that CMS add the procedure described by CPT code 22858 to the list of ASC covered surgical procedures.

Response: We appreciate the commenters' support. As discussed earlier, we continue to believe that the procedure described by CPT code 22858 does not meet our criteria for inclusion on the list of ASC covered surgical procedures because this procedure would generally be expected to require at least an overnight stay.

After consideration of the public comments we received, we are finalizing the proposal to add the procedures described by CPT codes 22585, 22840, 22842, and 22845, which are being removed from the OPPS inpatient list for CY 2017, to the list of ASC covered surgical procedures for CY 2017. We also are including the procudure described by CPT code 22585 on the list of ASC covered surgical procedures for CY 2017.

2. Covered Ancillary Services

Consistent with the established ASC payment system policy, in the CY 2017 OPPS/ASC proposed rule (81 FR 45701), we proposed to update the ASC list of covered ancillary services to reflect the payment status for the services under the CY 2017 OPPS. Maintaining consistency with the OPPS may result in proposed changes to ASC payment indicators for some covered ancillary services because of changes that are being proposed under the OPPS for CY 2017. For example, a covered ancillary service that was separately paid under the revised ASC payment system in CY 2016 may be proposed for packaged status under the CY 2017 OPPS and, therefore, also under the ASC payment system for CY 2017.

To maintain consistency with the OPPS, we proposed that these services also would be packaged under the ASC payment system for CY 2017. We proposed to continue this reconciliation of packaged status for subsequent calendar years. Comment indicator ''CH,'' discussed in section XII.F. of the proposed rule, was used in Addendum BB to the proposed rule (which is available via the Internet on the CMS Web site) to indicate covered ancillary services for which we proposed a change in the ASC payment indicator to reflect a proposed change in the OPPS treatment of the service for CY 2017.

All ASC covered ancillary services and their proposed payment indicators for CY 2017 were included in Addendum BB to the proposed rule. We invited public comments on this proposal.

We did not receive any public comments on these proposals. Therefore, we are finalizing, without modification, our proposal to update the ASC list of covered ancillary services to reflect the payment status for the services under the OPPS. All CY 2017 ASC covered ancillary services and their final payment indicators are included in Addendum BB to this final rule with comment period (which is available via the Internet on the CMS Web site).

D. ASC Payment for Covered Surgical Procedures and Covered Ancillary Services

1. ASC Payment for Covered Surgical Procedures

a. Background

Our ASC payment policies for covered surgical procedures under the revised ASC payment system are fully described in the CY 2008 OPPS/ASC final rule with comment period (72 FR 66828 through 66831). Under our established policy for the revised ASC payment system, we use the ASC standard ratesetting methodology of multiplying the ASC relative payment weight for the procedure by the ASC conversion factor for that same year to calculate the national unadjusted payment rates for procedures with payment indicators ''G2'' and ''A2.'' Payment indicator ''A2'' was developed to identify procedures that were included on the list of ASC covered surgical procedures in CY 2007 and, therefore, were subject to transitional payment prior to CY 2011. Although the 4-year transitional period has ended and payment indicator ''A2'' is no longer required to identify surgical procedures subject to transitional payment, we retained payment indicator ''A2'' because it is used to identify procedures that are exempted from application of the office-based designation.

The rate calculation established for device-intensive procedures (payment

indicator ''J8'') is structured so that the packaged device payment amount is the same as under the OPPS, and only the service portion of the rate is subject to the ASC standard ratesetting methodology. In the CY 2016 OPPS/ASC final rule with comment period (80 FR 70474 through 70502), we updated the CY 2015 ASC payment rates for ASC covered surgical procedures with payment indicators of ''A2,'' ''G2,'' and ''J8'' using CY 2014 data, consistent with the CY 2016 OPPS update. We also updated payment rates for device-intensive procedures to incorporate the CY 2016 OPPS device offset percentages calculated under the standard APC ratesetting methodology as discussed earlier in this section.

Payment rates for office-based procedures (payment indicators ''P2,'' ''P3,'' and ''R2'') are the lower of the MPFS nonfacility PE RVU-based amount (we refer readers to the CY 2017 MPFS proposed rule) or the amount calculated using the ASC standard ratesetting methodology for the procedure. In the CY 2016 OPPS/ASC final rule with comment period, we updated the payment amounts for office-based procedures (payment indicators ''P2,'' ''P3,'' and ''R2'') using the most recent available MPFS and OPPS data. We compared the estimated CY 2016 rate for each of the office-based procedures, calculated according to the ASC standard ratesetting methodology, to the MPFS nonfacility PE RVU-based amount to determine which was lower and, therefore, would be the CY 2016 payment rate for the procedure under our final policy for the revised ASC payment system (§ 416.171(d)).

In the CY 2014 OPPS/ASC final rule with comment period (78 FR 75081), we finalized our proposal to calculate the CY 2014 payment rates for ASC covered surgical procedures according to our established methodologies, with the exception of device removal procedures. For CY 2014, we finalized a policy to conditionally package payment for device removal codes under the OPPS. Under the OPPS, a conditionally packaged code (status indicators ''Q1'' and ''Q2'') describes a HCPCS code where the payment is packaged when it is provided with a significant procedure but is separately paid when the service appears on the claim without a significant procedure. Because ASC services always include a covered surgical procedure, HCPCS codes that are conditionally packaged under the OPPS are always packaged (payment indicator ''N1'') under the ASC payment system. Under the OPPS, device removal procedures are conditionally packaged and, therefore, would be packaged under the ASC payment system. There would be no Medicare payment made when a device removal procedure is performed in an ASC without another surgical procedure included on the claim; therefore, no Medicare payment would be made if a device was removed but not replaced. To address this concern, for the device removal procedures that are conditionally packaged in the OPPS (status indicator ''Q2''), we assigned the current ASC payment indicators associated with these procedures and continued to provide separate payment in CYs 2014, 2015, and 2016.

b. Update to ASC Covered Surgical Procedure Payment Rates for CY 2017

In the CY 2017 OPPS/ASC proposed rule (81 FR 45702), we proposed to update ASC payment rates for CY 2017 and subsequent years using the established rate calculation methodologies under § 416.171 and using our proposed modified definition of device-intensive procedures, as discussed in section XI.C.1.b. of the proposed rule. Because the proposed OPPS relative payment weights were based on geometric mean costs for CY 2017 and subsequent years, the ASC system would use geometric means to determine proposed relative payment weights under the ASC standard methodology. We proposed to continue to use the amount calculated under the ASC standard ratesetting methodology for procedures assigned payment indicators ''A2'' and ''G2.''

We proposed that payment rates for office-based procedures (payment indicators ''P2,'' ''P3,'' and ''R2'') and device-intensive procedures (payment indicator ''J8'') be calculated according to our established policies and, for device-intensive procedures, using our proposed modified definition of device-intensive procedures, as discussed in section XI.C.1.b. of the proposed rule. Therefore, we proposed to update the payment amount for the service portion of the device-intensive procedures using the ASC standard ratesetting methodology and the payment amount for the device portion based on the proposed CY 2017 OPPS device offset percentages that have been calculated using the standard OPPS APC ratesetting methodology. Payment for office-based procedures would be at the lesser of the proposed CY 2017 MPFS nonfacility PE RVU-based amount or the proposed CY 2017 ASC payment amount calculated according to the ASC standard ratesetting methodology.

As we did for CYs 2014, 2015, and 2016, for CY 2017, we proposed to continue our policy for device removal procedures such that device removal procedures that are conditionally packaged in the OPPS (status indicators ''Q1'' and ''Q2'') would be assigned the current ASC payment indicators associated with these procedures and would continue to be paid separately under the ASC payment system.

We invited public comments on these proposals.

Comment: Several commenters disagreed with the proposed CY 2017 ASC payment rates for the surgical procedures described by the following CPT codes:

- CPT code 29882 (Arthroscopy, knee, surgical; with meniscus repair (medial OR lateral);
- CPT code 29883 (Arthroscopy, knee, surgical; with meniscus repair (medial and lateral));
- CPT code 28293 (Correction, hallux valgus (bunion), with or without sesamoidectomy; resection of joint with implant);
- CPT code 43239 (Esophagogastroduodenoscopy, flexible, transoral; with biopsy, single or multiple);
- CPT code 45378 (Colonoscopy, flexible; diagnostic, including collection of specimen(s) by brushing or washing, when performed (separate procedure));
- CPT code 66982 (Extracapsular cataract extraction removal with insertion of intraocular lens prosthesis (one stage procedure), manual or mechanical technique (*e.g.,* irrigation and aspiration or phacoemulsification), complex, requiring devices or techniques not generally used in routine cataract surgery (*e.g.,* iris expansion device, suture support for intraocular lens, or primary posterior capsulorrhexis) or performed on patients in the amblyogenic developmental stage); and
- CPT code 66984 (Extracapsular cataract removal with insertion of intraocular lens prosthesis (one stage procedure), manual or mechanical technique (*e.g.,* irrigation and aspiration or phacoemulsification)).

Commenters believed that the proposed CY 2017 payment rates for these procedures are inadequate and would not cover overhead costs or other standard supplies utilized during surgery. Commenters requested that CMS reconsider the data and methodology used to determine ASC payment rates.

Response: As discussed earlier, the ASC payment is dependent upon the APC assignment for the procedure. Based on our analysis of the latest hospital outpatient and ASC claims data used for this final rule with comment period, we updated ASC payment rates

for CY 2017 using the established rate calculation methodologies under § 416.171 and using our finalized modified definition of device-intensive procedures, as discussed in section XII.C.1.b. of this final rule with comment period. We do not make additional payment adjustments to specific procedures.

After consideration of the public comments we received, we are finalizing our proposed policies, without modification, to calculate the CY 2017 payment rates for ASC covered surgical procedures according to our established methodologies using the modified definition of device-intensive procedures. For those covered surgical procedures where the payment rate is the lower of the final rates under the ASC standard ratesetting methodology and the MPFS final rates, the final payment indicators and rates set forth in this final rule with comment period are based on a comparison using the MPFS rates effective January 1, 2017. For a discussion of the MPFS rates, we refer readers to the CY 2017 MPFS final rule with comment period.

2. Payment for Covered Ancillary Services

a. Background

Our final payment policies under the revised ASC payment system for covered ancillary services vary according to the particular type of service and its payment policy under the OPPS. Our overall policy provides separate ASC payment for certain ancillary items and services integrally related to the provision of ASC covered surgical procedures that are paid separately under the OPPS and provides packaged ASC payment for other ancillary items and services that are packaged or conditionally packaged (status indicators ''N,'' ''Q1,'' and ''Q2'') under the OPPS. In the CY 2013 OPPS/ASC rulemaking (77 FR 45169 and 77 FR 68457 through 68458), we further clarified our policy regarding the payment indicator assignment of codes that are conditionally packaged in the OPPS (status indicators ''Q1'' and ''Q2''). Under the OPPS, a conditionally packaged code describes a HCPCS code where the payment is packaged when it is provided with a significant procedure but is separately paid when the service appears on the claim without a significant procedure. Because ASC services always include a surgical procedure, HCPCS codes that are conditionally packaged under the OPPS are always packaged (payment indictor ''N1'') under the ASC payment system (except for device removal codes as discussed in section IV. of this final rule with comment period). Thus, our final policy generally aligns ASC payment bundles with those under the OPPS (72 FR 42495). In all cases, in order for those ancillary services also to be paid, ancillary items and services must be provided integral to the performance of ASC covered surgical procedures for which the ASC bills Medicare.

Our ASC payment policies provide separate payment for drugs and biologicals that are separately paid under the OPPS at the OPPS rates. We generally pay for separately payable radiology services at the lower of the MPFS nonfacility PE RVU-based (or technical component) amount or the rate calculated according to the ASC standard ratesetting methodology (72 FR 42497). However, as finalized in the CY 2011 OPPS/ASC final rule with comment period (75 FR 72050), payment indicators for all nuclear medicine procedures (defined as CPT codes in the range of 78000 through 78999) that are designated as radiology services that are paid separately when provided integral to a surgical procedure on the ASC list are set to ''Z2'' so that payment is made based on the ASC standard ratesetting methodology rather than the MPFS nonfacility PE RVU amount, regardless of which is lower.

Similarly, we also finalized our policy to set the payment indicator to ''Z2'' for radiology services that use contrast agents so that payment for these procedures will be based on the OPPS relative payment weight using the ASC standard ratesetting methodology and, therefore, will include the cost for the contrast agent (42 CFR 416.171(d)(2)).

ASC payment policy for brachytherapy sources mirrors the payment policy under the OPPS. ASCs are paid for brachytherapy sources provided integral to ASC covered surgical procedures at prospective rates adopted under the OPPS or, if OPPS rates are unavailable, at contractor-priced rates (72 FR 42499). Since December 31, 2009, ASCs have been paid for brachytherapy sources provided integral to ASC covered surgical procedures at prospective rates adopted under the OPPS.

Our ASC policies also provide separate payment for: (1) Certain items and services that CMS designates as contractor-priced, including, but not limited to, the procurement of corneal tissue; and (2) certain implantable items that have pass-through payment status under the OPPS. These categories do not have prospectively established ASC payment rates according to the final policies for the revised ASC payment system (72 FR 42502 and 42508 through 42509; 42 CFR 416.164(b)). Under the revised ASC payment system, we have designated corneal tissue acquisition and hepatitis B vaccines as contractor-priced. Corneal tissue acquisition is contractor-priced based on the invoiced costs for acquiring the corneal tissue for transplantation. Hepatitis B vaccines are contractor-priced based on invoiced costs for the vaccine.

Devices that are eligible for pass-through payment under the OPPS are separately paid under the ASC payment system and are contractor-priced. Under the revised ASC payment system (72 FR 42502), payment for the surgical procedure associated with the pass-through device is made according to our standard methodology for the ASC payment system, based on only the service (nondevice) portion of the procedure's OPPS relative payment weight if the APC weight for the procedure includes other packaged device costs. We also refer to this methodology as applying a ''device offset'' to the ASC payment for the associated surgical procedure. This ensures that duplicate payment is not provided for any portion of an implanted device with OPPS pass-through payment status.

In the CY 2015 OPPS/ASC final rule with comment period (79 FR 66933 through 66934), we finalized that, beginning in CY 2015, certain diagnostic tests within the medicine range of CPT codes for which separate payment is allowed under the OPPS are covered ancillary services when they are integral to an ASC covered surgical procedure. We finalized that diagnostic tests within the medicine range of CPT codes include all Category I CPT codes in the medicine range established by CPT, from 90000 to 99999, and Category III CPT codes and Level II HCPCS codes that describe diagnostic tests that crosswalk or are clinically similar to procedures in the medicine range established by CPT. In the CY 2015 OPPS/ASC final rule with comment period, we also finalized our policy to pay for these tests at the lower of the MPFS nonfacility PE RVU-based (or technical component) amount or the rate calculated according to the ASC standard ratesetting methodology (79 FR 66933 through 66934). We finalized that the diagnostic tests for which the payment is based on the ASC standard ratesetting methodology be assigned to payment indicator ''Z2'' and revised the definition of payment indicator ''Z2'' to include reference to diagnostic services and those for which the payment is based on the MPFS nonfacility PE RVU-based amount be assigned payment

indicator ''Z3,'' and revised the definition of payment indicator ''Z3'' to include reference to diagnostic services.

b. Payment for Covered Ancillary Services for CY 2017

For CY 2017 and subsequent years, in the CY 2017 OPPS/ASC proposed rule (81 FR 45702 through 45704), we proposed to update the ASC payment rates and to make changes to ASC payment indicators as necessary to maintain consistency between the OPPS and ASC payment system regarding the packaged or separately payable status of services and the proposed CY 2017 OPPS and ASC payment rates and subsequent year payment rates. We also proposed to continue to set the CY 2017 ASC payment rates and subsequent year payment rates for brachytherapy sources and separately payable drugs and biologicals equal to the OPPS payment rates for CY 2017 and subsequent year payment rates.

Consistent with established ASC payment policy (72 FR 42497), we proposed that the CY 2017 payment for separately payable covered radiology services be based on a comparison of the proposed CY 2017 MPFS nonfacility PE RVU-based amounts (we refer readers to the CY 2017 MPFS proposed rule) and the proposed CY 2017 ASC payment rates calculated according to the ASC standard ratesetting methodology and then set at the lower of the two amounts (except as discussed below for nuclear medicine procedures and radiology services that use contrast agents). For CY 2017 and subsequent years, we proposed that payment for a radiology service would be packaged into the payment for the ASC covered surgical procedure if the radiology service is packaged or conditionally packaged under the OPPS. The payment indicators in Addendum BB to the proposed rule (which is available via the Internet on the CMS Web site) indicated whether the proposed payment rates for radiology services are based on the MPFS nonfacility PE RVU-based amount or the ASC standard ratesetting methodology; or whether payment for a radiology service is packaged into the payment for the covered surgical procedure (payment indicator ''N1''). Radiology services that we proposed to pay based on the ASC standard ratesetting methodology in CY 2017 and subsequent years are assigned payment indicator ''Z2'' (Radiology or diagnostic service paid separately when provided integral to a surgical procedure on ASC list; payment based on OPPS relative payment weight), and those for which the proposed payment is based on the MPFS nonfacility PE RVU-based amount are assigned payment indicator ''Z3'' (Radiology or diagnostic service paid separately when provided integral to a surgical procedure on ASC list; payment based on MPFS nonfacility PE RVUs).

As finalized in the CY 2011 OPPS/ASC final rule with comment period (75 FR 72050), payment indicators for all nuclear medicine procedures (defined as CPT codes in the range of 78000 through 78999) that are designated as radiology services that are paid separately when provided integral to a surgical procedure on the ASC list are set to ''Z2'' so that payment for these procedures will be based on the OPPS relative payment weight using the ASC standard ratesetting methodology (rather than the MPFS nonfacility PE RVU-based amount, regardless of which is lower) and, therefore, will include the cost for the diagnostic radiopharmaceutical. We proposed to continue this modification to the payment methodology for CY 2017 and subsequent years and, therefore, proposed to assign payment indicator ''Z2'' to nuclear medicine procedures.

As finalized in the CY 2012 OPPS/ASC final rule with comment period (76 FR 74429 through 74430), payment indicators for radiology services that use contrast agents are assigned to ''Z2'' so that payment for these procedures will be based on the OPPS relative payment weight using the ASC standard ratesetting methodology and, therefore, will include the cost for the contrast agent. We proposed to continue this modification to the payment methodology for CY 2017 and subsequent years and, therefore, proposed to assign the payment indicator ''Z2'' to radiology services that use contrast agents.

As finalized in the CY 2016 OPPS/ASC final rule with comment period (80 FR 70471 through 70473), we proposed to continue to not make separate payment as a covered ancillary service for procurement of corneal tissue when used in any noncorneal transplant procedure under the ASC payment system for CY 2017. We also proposed for CY 2017 ASC payments to continue to designate hepatitis B vaccines as contractor-priced based on the invoiced costs for the vaccine, and corneal tissue acquisition as contractor-priced based on the invoiced costs for acquiring the corneal tissue for transplant.

Consistent with our established ASC payment policy, we proposed that the CY 2017 payment for devices that are eligible for pass-through payment under the OPPS are separately paid under the ASC payment system and would be contractor-priced. Currently, the four devices that are eligible for pass-through payment in the OPPS are described by HCPCS code C1822 (Generator, neurostimulator (implantable), high frequency, with rechargeable battery and charging system); HCPCS code C2613 (Lung biopsy plug with delivery system); HCPCS code C2623 (Catheter, transluminal angioplasty, drug-coated, non-laser); and HCPCS code C2624 (Implantable wireless pulmonary artery pressure sensor with delivery catheter, including all system components). Consistent with our current policy, we proposed for CY 2017 that payment for the surgical procedure associated with the pass-through device is made according to our standard methodology for the ASC payment system, based on only the service (nondevice) portion of the procedure's OPPS relative payment weight, if the APC weight for the procedure includes similar packaged device costs.

Consistent with our current policy, we proposed that certain diagnostic tests within the medicine range of CPT codes (that is, all Category I CPT codes in the medicine range established by CPT, from 90000 to 99999, and Category III CPT codes and Level II HCPCS codes that describe diagnostic tests that crosswalk or are clinically similar to procedures in the medicine range established by CPT) for which separate payment is allowed under the OPPS are covered ancillary services when they are provided integral to an ASC covered surgical procedure. We would pay for these tests at the lower of the MPFS nonfacility PE RVU-based (or technical component) amount or the rate calculated according to the ASC standard ratesetting methodology (79 FR 66933 through 66934). There are no additional codes that meet this criterion for CY 2017.

In summary, for CY 2017 and subsequent years, we proposed to continue the methodologies for paying for covered ancillary services established for CY 2016. Most covered ancillary services and their proposed payment indicators for CY 2017 were listed in Addendum BB to the proposed rule (which is available via the Internet on the CMS Web site).

We did not receive public comments on our proposals regarding payment for covered ancillary services and, therefore, are finalizing these policies as proposed for CY 2017 and subsequent years. For those covered ancillary services where the payment rate is the lower of the final rates under the ASC standard ratesetting methodology and the MPFS final rates, the final payment indicators and rates set forth in this final rule with comment period are

based on a comparison using the MPFS rates effective January 1, 2017. For a discussion of the MPFS rates, we refer readers to the CY 2017 MPFS final rule with comment period.

E. New Technology Intraocular Lenses (NTIOLs)

1. NTIOL Application Cycle

Our process for reviewing applications to establish new classes of NTIOLs is as follows:

• Applicants submit their NTIOL requests for review to CMS by the annual deadline. For a request to be considered complete, we require submission of the information that is found in the guidance document entitled ''Application Process and Information Requirements for Requests for a New Class of New Technology Intraocular Lenses (NTIOLs) or Inclusion of an IOL in an Existing NTIOL Class'' posted on the CMS Web site at: *http://www.cms.gov/Medicare/Medicare-Fee-for-Service-Payment/ASCPayment/NTIOLs.html.*

• We announce annually, in the proposed rule updating the ASC and OPPS payment rates for the following calendar year, a list of all requests to establish new NTIOL classes accepted for review during the calendar year in which the proposal is published. In accordance with section 141(b)(3) of Public Law 103–432 and our regulations at 42 CFR 416.185(b), the deadline for receipt of public comments is 30 days following publication of the list of requests in the proposed rule.

• In the final rule updating the ASC and OPPS payment rates for the following calendar year, we—

++ Provide a list of determinations made as a result of our review of all new NTIOL class requests and public comments;

++ When a new NTIOL class is created, identify the predominant characteristic of NTIOLs in that class that sets them apart from other IOLs (including those previously approved as members of other expired or active NTIOL classes) and that is associated with an improved clinical outcome.

++ Set the date of implementation of a payment adjustment in the case of approval of an IOL as a member of a new NTIOL class prospectively as of 30 days after publication of the ASC payment update final rule, consistent with the statutory requirement.

++ Announce the deadline for submitting requests for review of an application for a new NTIOL class for the following calendar year.

2. Requests To Establish New NTIOL Classes for CY 2017

We did not receive any requests for review to establish a new NTIOL class for CY 2017 by March 1, 2016, the due date published in the CY 2016 OPPS/ASC final rule with comment period (80 FR 70497).

3. Payment Adjustment

The current payment adjustment for a 5-year period from the implementation date of a new NTIOL class is $50 per lens. Since implementation of the process for adjustment of payment amounts for NTIOLs in 1999, we have not revised the payment adjustment amount, and we did not propose to revise the payment adjustment amount for CY 2017. The final ASC payment adjustment amount for NTIOLS in CY 2017 is $50.

4. Announcement of CY 2018 Deadline for Submitting Requests for CMS Review of Applications for a New Class of NTIOLs

In accordance with § 416.185(a) of our regulations, CMS announces that in order to be considered for payment effective beginning in CY 2018, requests for review of applications for a new class of new technology IOLs must be received at CMS by 5:00 p.m. EST, on March 01, 2017. Send requests to ASC/NTIOL, Division of Outpatient Care, Mailstop C4–05–17, Centers for Medicare and Medicaid Services, 7500 Security Boulevard, Baltimore, MD 21244–1850. To be considered, requests for NTIOL reviews must include the information requested on the CMS Web site at: *https://www.cms.gov/Medicare/Medicare-Fee-for-Service-Payment/ASCPayment/NTIOLs.html*.

F. ASC Payment and Comment Indicators

1. Background

In addition to the payment indicators that we introduced in the August 2, 2007 final rule, we created final comment indicators for the ASC payment system in the CY 2008 OPPS/ASC final rule with comment period (72 FR 66855). We created Addendum DD1 to define ASC payment indicators that we use in Addenda AA and BB to provide payment information regarding covered surgical procedures and covered ancillary services, respectively, under the revised ASC payment system. The ASC payment indicators in Addendum DD1 are intended to capture policy relevant characteristics of HCPCS codes that may receive packaged or separate payment in ASCs, such as whether they were on the ASC list of covered services prior to CY 2008; payment designation, such as device-intensive or office-based, and the corresponding ASC payment methodology; and their classification as separately payable ancillary services, including radiology services, brachytherapy sources, OPPS pass-through devices, corneal tissue acquisition services, drugs or biologicals, or NTIOLs.

We also created Addendum DD2 that lists the ASC comment indicators. The ASC comment indicators used in Addenda AA and BB to the proposed rules and final rules with comment period serve to identify, for the revised ASC payment system, the status of a specific HCPCS code and its payment indicator with respect to the timeframe when comments will be accepted. The comment indicator ''NP'' is used in the OPPS/ASC proposed rule to indicate new codes for the next calendar year for which the interim payment indicator assigned is subject to comment. The comment indicator ''NP'' also is assigned to existing codes with substantial revisions to their descriptors such that we consider them to be describing new services, as discussed in the CY 2010 OPPS/ASC final rule with comment period (74 FR 60622). In this CY 2017 OPPS/ASC final rule with comment period, we respond to public comments and finalize the ASC treatment of all codes that are labeled with comment indicator ''NP'' in Addenda AA and BB to the CY 2016 OPPS/ASC final rule with comment period (80 FR 70497).

The ''CH'' comment indicator is used in Addenda AA and BB to the proposed rule (which are available via the Internet on the CMS Web site) to indicate that the payment indicator assignment has changed for an active HCPCS code in the current year and the next calendar year; an active HCPCS code is newly recognized as payable in ASCs; or an active HCPCS code is discontinued at the end of the current calendar year. The ''CH'' comment indicators that are published in the final rule with comment period are provided to alert readers that a change has been made from one calendar year to the next, but do not indicate that the change is subject to comment.

2. ASC Payment and Comment Indicators

For CY 2017 and subsequent years, in the CY 2017 OPPS/ASC proposed rule (81 FR 45705), we proposed to continue using the current comment indicators of ''NP'' and ''CH.'' For CY 2017, there are new and revised Category I and III CPT codes as well as new and revised Level

II HCPCS codes. Therefore, we proposed that Category I and III CPT codes that are new and revised for CY 2017 and any new and existing Level II HCPCS codes with substantial revisions to the code descriptors for CY 2017 compared to the CY 2016 descriptors that are included in ASC Addenda AA and BB to the CY 2017 OPPS/ASC proposed rule would be labeled with proposed new comment indicator ''NP'' to indicate that these CPT and Level II HCPCS codes are open for comment as part of the CY 2017 OPPS/ASC proposed rule. Proposed new comment indicator ''NP'' means a new code for the next calendar year or an existing code with substantial revision to its code descriptor in the next calendar year as compared to current calendar year; comments will be accepted on the proposed ASC payment indicator for the new code.

We stated that we would respond to public comments on ASC payment and comment indicators and finalize their ASC assignment in this CY 2017 OPPS/ASC final rule with comment period. We referred readers to Addenda DD1 and DD2 to the proposed rule (which are available via the Internet on the CMS Web site) for the complete list of ASC payment and comment indicators proposed for the CY 2017 update.

We did not receive any public comments on the ASC payment and comment indicators and therefore are finalizing their use as proposed without modification.

G. Calculation of the ASC Conversion Factor and the ASC Payment Rates

1. Background

In the August 2, 2007 final rule (72 FR 42493), we established our policy to base ASC relative payment weights and payment rates under the revised ASC payment system on APC groups and the OPPS relative payment weights. Consistent with that policy and the requirement at section 1833(i)(2)(D)(ii) of the Act that the revised payment system be implemented so that it would be budget neutral, the initial ASC conversion factor (CY 2008) was calculated so that estimated total Medicare payments under the revised ASC payment system in the first year would be budget neutral to estimated total Medicare payments under the prior (CY 2007) ASC payment system (the ASC conversion factor is multiplied by the relative payment weights calculated for many ASC services in order to establish payment rates). That is, application of the ASC conversion factor was designed to result in aggregate Medicare expenditures under the revised ASC payment system in CY 2008 being equal to aggregate Medicare expenditures that would have occurred in CY 2008 in the absence of the revised system, taking into consideration the cap on ASC payments in CY 2007 as required under section 1833(i)(2)(E) of the Act (72 FR 42522). We adopted a policy to make the system budget neutral in subsequent calendar years (72 FR 42532 through 42533; 42 CFR 416.171(e)).

We note that we consider the term ''expenditures'' in the context of the budget neutrality requirement under section 1833(i)(2)(D)(ii) of the Act to mean expenditures from the Medicare Part B Trust Fund. We do not consider expenditures to include beneficiary coinsurance and copayments. This distinction was important for the CY 2008 ASC budget neutrality model that considered payments across the OPPS, ASC, and MPFS payment systems. However, because coinsurance is almost always 20 percent for ASC services, this interpretation of expenditures has minimal impact for subsequent budget neutrality adjustments calculated within the revised ASC payment system.

In the CY 2008 OPPS/ASC final rule with comment period (72 FR 66857 through 66858), we set out a step-by-step illustration of the final budget neutrality adjustment calculation based on the methodology finalized in the August 2, 2007 final rule (72 FR 42521 through 42531) and as applied to updated data available for the CY 2008 OPPS/ASC final rule with comment period. The application of that methodology to the data available for the CY 2008 OPPS/ASC final rule with comment period resulted in a budget neutrality adjustment of 0.65.

For CY 2008, we adopted the OPPS relative payment weights as the ASC relative payment weights for most services and, consistent with the final policy, we calculated the CY 2008 ASC payment rates by multiplying the ASC relative payment weights by the final CY 2008 ASC conversion factor of $41.401. For covered office-based surgical procedures, covered ancillary radiology services (excluding covered ancillary radiology services involving certain nuclear medicine procedures or involving the use of contrast agents, as discussed in section XII.D.2. of this final rule with comment period), and certain diagnostic tests within the medicine range that are covered ancillary services, the established policy is to set the payment rate at the lower of the MPFS unadjusted nonfacility PE RVU-based amount or the amount calculated using the ASC standard ratesetting methodology. Further, as discussed in the CY 2008 OPPS/ASC final rule with comment period (72 FR 66841 through 66843), we also adopted alternative ratesetting methodologies for specific types of services (for example, device-intensive procedures).

As discussed in the August 2, 2007 final rule (72 FR 42517 through 42518) and as codified at § 416.172(c) of the regulations, the revised ASC payment system accounts for geographic wage variation when calculating individual ASC payments by applying the pre-floor and pre-reclassified IPPS hospital wage indexes to the labor-related share, which is 50 percent of the ASC payment amount based on a GAO report of ASC costs using 2004 survey data. Beginning in CY 2008, CMS accounted for geographic wage variation in labor cost when calculating individual ASC payments by applying the pre-floor and pre-reclassified hospital wage index values that CMS calculates for payment under the IPPS, using updated Core Based Statistical Areas (CBSAs) issued by OMB in June 2003.

The reclassification provision in section 1886(d)(10) of the Act is specific to hospitals. We believe that using the most recently available pre-floor and pre-reclassified IPPS hospital wage indexes results in the most appropriate adjustment to the labor portion of ASC costs. We continue to believe that the unadjusted hospital wage indexes, which are updated yearly and are used by many other Medicare payment systems, appropriately account for geographic variation in labor costs for ASCs. Therefore, the wage index for an ASC is the pre-floor and pre-reclassified hospital wage index under the IPPS of the CBSA that maps to the CBSA where the ASC is located.

On February 28, 2013, OMB issued OMB Bulletin No. 13–01, which provides the delineations of all Metropolitan Statistical Areas, Metropolitan Divisions, Micropolitan Statistical Areas, Combined Statistical Areas, and New England City and Town Areas in the United States and Puerto Rico based on the standards published on June 28, 2010 in the **Federal Register** (75 FR 37246 through 37252) and 2010 Census Bureau data. (A copy of this bulletin may be obtained at: *http://www.whitehouse.gov/sites/default/files/omb/bulletins/2013/b-13-01.pdf.*) In the FY 2015 IPPS/LTCH PPS final rule (79 FR 49951 through 49963), we implemented the use of the CBSA delineations issued by OMB in OMB Bulletin 13–01 for the IPPS hospital wage index beginning in FY 2015. In the CY 2015 OPPS/ASC final rule with comment period (79 FR 66937), we finalized a 1-year transition policy that

we applied in CY 2015 for all ASCs that experienced any decrease in their actual wage index exclusively due to the implementation of the new OMB delineations. This transition does not apply in CY 2017.

Generally, OMB issues major revisions to statistical areas every 10 years, based on the results of the decennial census. However, OMB occasionally issues minor updates and revisions to statistical areas in the years between the decennial censuses. On July 15, 2015, OMB issued OMB Bulletin No. 15–01, which provides updates to and supersedes OMB Bulletin No. 13–01 that was issued on February 28, 2013. The attachment to OMB Bulletin No. 15–01 provides detailed information on the update to statistical areas since February 28, 2013. The updates provided in OMB Bulletin No. 15–01 are based on the application of the 2010 Standards for Delineating Metropolitan and Micropolitan Statistical Areas to Census Bureau population estimates for July 1, 2012 and July 1, 2013. The complete list of statistical areas incorporating these changes is provided in the attachment to OMB Bulletin No. 15–01. According to OMB, ''[t]his bulletin establishes revised delineations for the Nation's Metropolitan Statistical Areas, Micropolitan Statistical Areas, and Combined Statistical Areas. The bulletin also provides delineations of Metropolitan Divisions as well as delineations of New England City and Town Areas.'' A copy of this bulletin may be obtained on the Web site at: *https://www.whitehouse.gov/omb/bulletins_default*.

OMB Bulletin No. 15–01 made the following changes that are relevant to the IPPS and ASC wage index:

- Garfield County, OK, with principal city Enid, OK, which was a Micropolitan (geographically rural) area, now qualifies as an urban new CBSA 21420 called Enid, OK.
- The county of Bedford City, VA, a component of the Lynchburg, VA CBSA 31340, changed to town status and is added to Bedford County. Therefore, the county of Bedford City (SSA State county code 49088, FIPS State County Code 51515) is now part of the county of Bedford, VA (SSA State county code 49090, FIPS State County Code 51019). However, the CBSA remains Lynchburg, VA, 31340.
- The name of Macon, GA, CBSA 31420, as well as a principal city of the Macon-Warner Robins, GA combined statistical area, is now Macon-Bibb County, GA. The CBSA code remains as 31420.

In the FY 2017 IPPS/LTCH PPS proposed rule (81 FR 25062), we proposed to implement these revisions, effective October 1, 2016, beginning with the FY 2017 wage indexes. In the FY 2017 IPPS/LTCH PPS proposed rule, we proposed to use these new definitions to calculate area IPPS wage indexes in a manner that is generally consistent with the CBSA-based methodologies finalized in the FY 2005 and the FY 2015 IPPS final rules. (We note that in the FY 2017 IPPS/LTCH PPS final rule (81 FR 56913), we finalized this proposal.) We believe that it is important for the ASC payment system to use the latest labor market area delineations available as soon as is reasonably possible in order to maintain a more accurate and up-to-date payment system that reflects the reality of population shifts and labor market conditions. Therefore, for purposes of the ASC payment system, in the CY 2017 OPPS/ASC proposed rule (81 FR 45706), we proposed to implement these revisions to the OMB statistical area delineations, effective January 1, 2017, beginning with the CY 2017 ASC wage indexes. We invited public comments on these proposals.

For CY 2017, the CY 2017 ASC wage indexes fully reflect the new OMB labor market area delineations (including the revisions to the OMB labor market delineations discussed above, as set forth in OMB Bulletin No. 15–01).

We note that, in certain instances, there might be urban or rural areas for which there is no IPPS hospital that has wage index data that could be used to set the wage index for that area. For these areas, our policy has been to use the average of the wage indexes for CBSAs (or metropolitan divisions as applicable) that are contiguous to the area that has no wage index (where ''contiguous'' is defined as sharing a border). For example, for CY 2014, we applied a proxy wage index based on this methodology to ASCs located in CBSA 25980 (Hinesville-Fort Stewart, GA) and CBSA 08 (Rural Delaware).

When all of the areas contiguous to the urban CBSA of interest are rural and there is no IPPS hospital that has wage index data that could be used to set the wage index for that area, we determine the ASC wage index by calculating the average of all wage indexes for urban areas in the State (75 FR 72058 through 72059). (In other situations, where there are no IPPS hospitals located in a relevant labor market area, we continue our current policy of calculating an urban or rural area's wage index by calculating the average of the wage indexes for CBSAs (or metropolitan divisions where applicable) that are contiguous to the area with no wage index.)

Comment: Several commenters made the same recommendation that was made in the CY 2010 (74 FR 60625), CY 2011 (75 FR 72059), CY 2012 (76 FR 74446), CY 2013 (77 FR 68463), CY 2014 (78 FR 75086), and CY 2015 (79 FR 66937) rulemakings—that is, that CMS adopt for the ASC payment system the same wage index values used for hospital payment under the OPPS.

Response: We have responded to this comment in the prior OPPS/ASC rules mentioned above, and believe our prior rationale for using unadjusted wage indexes is still sound. We continue to believe that the unadjusted hospital wage indexes, which are updated yearly and are used by almost all Medicare payment systems, appropriately account for geographic variance in labor costs for ASCs. We refer readers to our response to this comment in the CY 2011 OPPS/ASC final rule with comment period (75 FR 72059). We discuss our budget neutrality adjustment for changes to the wage indices below in section XII.G.2.b. of this final rule with comment period.

2. Calculation of the ASC Payment Rates

a. Updating the ASC Relative Payment Weights for CY 2017 and Future Years

We update the ASC relative payment weights each year using the national OPPS relative payment weights (and MPFS nonfacility PE RVU-based amounts, as applicable) for that same calendar year and uniformly scale the ASC relative payment weights for each update year to make them budget neutral (72 FR 42533). Consistent with our established policy, in the CY 2017 OPPS/ASC proposed rule (81 FR 45706 through 45707), we proposed to scale the CY 2017 relative payment weights for ASCs according to the following method. Holding ASC utilization, the ASC conversion factor, and the mix of services constant from CY 2015, we proposed to compare the total payment using the CY 2016 ASC relative payment weights with the total payment using the CY 2017 ASC relative payment weights to take into account the changes in the OPPS relative payment weights between CY 2016 and CY 2017. We proposed to use the ratio of CY 2016 to CY 2017 total payments (the weight scalar) to scale the ASC relative payment weights for CY 2017. The proposed CY 2017 ASC scalar was 0.9030 and scaling would apply to the ASC relative payment weights of the covered surgical procedures, covered ancillary radiology services, and certain diagnostic tests within the medicine range of CPT codes which are covered

ancillary services for which the ASC payment rates are based on OPPS relative payment weights.

Scaling would not apply in the case of ASC payment for separately payable covered ancillary services that have a predetermined national payment amount (that is, their national ASC payment amounts are not based on OPPS relative payment weights), such as drugs and biologicals that are separately paid or services that are contractor-priced or paid at reasonable cost in ASCs. Any service with a predetermined national payment amount would be included in the ASC budget neutrality comparison, but scaling of the ASC relative payment weights would not apply to those services. The ASC payment weights for those services without predetermined national payment amounts (that is, those services with national payment amounts that would be based on OPPS relative payment weights) would be scaled to eliminate any difference in the total payment between the current year and the update year.

For any given year's ratesetting, we typically use the most recent full calendar year of claims data to model budget neutrality adjustments. At the time of the proposed rule, we had available 98 percent of CY 2015 ASC claims data.

To create an analytic file to support calculation of the weight scalar and budget neutrality adjustment for the wage index (discussed below), we summarized available CY 2015 ASC claims by ASC and by HCPCS code. We used the National Provider Identifier for the purpose of identifying unique ASCs within the CY 2015 claims data. We used the supplier zip code reported on the claim to associate State, county, and CBSA with each ASC. This file, available to the public as a supporting data file for the proposed rule, is posted on the CMS Web site at: *http://www.cms.gov/Research-Statistics-Data-and-Systems/Files-for-Order/LimitedDataSets/ASCPaymentSystem.html*.

b. Updating the ASC Conversion Factor

Under the OPPS, we typically apply a budget neutrality adjustment for provider level changes, most notably a change in the wage index values for the upcoming year, to the conversion factor. Consistent with our final ASC payment policy, for the CY 2017 ASC payment system and subsequent years, in the CY 2017 OPPS/ASC proposed rule (81 FR 45707), we proposed to calculate and apply a budget neutrality adjustment to the ASC conversion factor for supplier level changes in wage index values for the upcoming year, just as the OPPS wage index budget neutrality adjustment is calculated and applied to the OPPS conversion factor. For CY 2017, we calculated this proposed adjustment for the ASC payment system by using the most recent CY 2015 claims data available and estimating the difference in total payment that would be created by introducing the proposed CY 2017 ASC wage indexes. Specifically, holding CY 2015 ASC utilization and service-mix and the proposed CY 2017 national payment rates after application of the weight scalar constant, we calculated the total adjusted payment using the CY 2016 ASC wage indexes (which reflect the new OMB delineations and include any applicable transition period) and the total adjusted payment using the proposed CY 2017 ASC wage indexes (which would fully reflect the new OMB delineations). We used the 50-percent labor-related share for both total adjusted payment calculations. We then compared the total adjusted payment calculated with the CY 2016 ASC wage indexes to the total adjusted payment calculated with the proposed CY 2017 ASC wage indexes and applied the resulting ratio of 0.9992 (the proposed CY 2017 ASC wage index budget neutrality adjustment) to the CY 2016 ASC conversion factor to calculate the proposed CY 2017 ASC conversion factor.

Section 1833(i)(2)(C)(i) of the Act requires that, if the Secretary has not updated amounts established under the revised ASC payment system in a calendar year, the payment amounts shall be increased by the percentage increase in the Consumer Price Index for all urban consumers (CPI–U), U.S. city average, as estimated by the Secretary for the 12-month period ending with the midpoint of the year involved. Therefore, the statute does not mandate the adoption of any particular update mechanism, but it requires the payment amounts to be increased by the CPI–U in the absence of any update. Because the Secretary updates the ASC payment amounts annually, we adopted a policy, which we codified at 42 CFR 416.171(a)(2)(ii), to update the ASC conversion factor using the CPI–U for CY 2010 and subsequent calendar years. Therefore, the annual update to the ASC payment system is the CPI–U (referred to as the CPI–U update factor).

Section 3401(k) of the Affordable Care Act amended section 1833(i)(2)(D) of the Act by adding a new clause (v) which requires that any annual update under the ASC payment system for the year, after application of clause (iv), shall be reduced by the productivity adjustment described in section 1886(b)(3)(B)(xi)(II) of the Act, effective with the calendar year beginning January 1, 2011. The statute defines the productivity adjustment to be equal to the 10-year moving average of changes in annual economy-wide private nonfarm business multifactor productivity (MFP) (as projected by the Secretary for the 10-year period ending with the applicable fiscal year, year, cost reporting period, or other annual period) (the ''MFP adjustment''). Clause (iv) of section 1833(i)(2)(D) of the Act authorizes the Secretary to provide for a reduction in any annual update for failure to report on quality measures. Clause (v) of section 1833(i)(2)(D) of the Act states that application of the MFP adjustment to the ASC payment system may result in the update to the ASC payment system being less than zero for a year and may result in payment rates under the ASC payment system for a year being less than such payment rates for the preceding year.

In the CY 2012 OPPS/ASC final rule with comment period (76 FR 74516), we finalized a policy that ASCs begin submitting data on quality measures for services beginning on October 1, 2012 for the CY 2014 payment determination under the ASC Quality Reporting (ASCQR) Program. In the CY 2013 OPPS/ASC final rule with comment period (77 FR 68499 through 68500), we finalized a methodology to calculate reduced national unadjusted payment rates using the ASCQR Program reduced update conversion factor that would apply to ASCs that fail to meet their quality reporting requirements for the CY 2014 payment determination and subsequent years. The application of the 2.0 percentage point reduction to the annual update factor, which currently is the CPI–U, may result in the update to the ASC payment system being less than zero for a year for ASCs that fail to meet the ASCQR Program requirements. We amended §§ 416.160(a)(1) and 416.171 to reflect these policies.

In accordance with section 1833(i)(2)(C)(i) of the Act, before applying the MFP adjustment, the Secretary first determines the ''percentage increase'' in the CPI–U, which we interpret cannot be a negative percentage. Thus, in the instance where the percentage change in the CPI–U for a year is negative, we would hold the CPI–U update factor for the ASC payment system to zero. For the CY 2014 payment determination and subsequent years, under section 1833(i)(2)(D)(iv) of the Act, we would reduce the annual update by 2.0 percentage points for an ASC that fails to submit quality information under the

rules established by the Secretary in accordance with section 1833(i)(7) of the Act.

Section 1833(i)(2)(D)(v) of the Act, as added by section 3401(k) of the Affordable Care Act, requires that the Secretary reduce the annual update factor, after application of any quality reporting reduction, by the MFP adjustment, and states that application of the MFP adjustment to the annual update factor after application of any quality reporting reduction may result in the update being less than zero for a year. If the application of the MFP adjustment to the annual update factor after application of any quality reporting reduction would result in an MFP-adjusted update factor that is less than zero, the resulting update to the ASC payment rates would be negative and payments would decrease relative to the prior year. We refer readers to the CY 2011 OPPS/ASC final rule with comment period (75 FR 72062 through 72064) for examples of how the MFP adjustment is applied to the ASC payment system.

For the proposed rule, based on IHS Global Insight's (IGI's) 2016 first quarter forecast with historical data through the fourth quarter of 2015, for the 12-month period ending with the midpoint of CY 2017, the CPI–U update was projected to be 1.7 percent. Also, based on IGI's 2016 first quarter forecast, the MFP adjustment for the period ending with the midpoint of CY 2017 was projected to be 0.5 percent. We finalized the methodology for calculating the MFP adjustment in the CY 2011 MPFS final rule with comment period (75 FR 73394 through 73396) and revised it in the CY 2012 MPFS final rule with comment period (76 FR 73300 through 73301) and the CY 2016 OPPS/ASC final rule with comment period (80 FR 70500 through 70501).

In the CY 2017 OPPS/ASC proposed rule (81 FR 45708), for CY 2017, we proposed to reduce the CPI–U update of 1.7 percent by the MFP adjustment of 0.5 percentage point, resulting in an MFP-adjusted CPI–U update factor of 1.2 percent for ASCs meeting the quality reporting requirements. Therefore, we proposed to apply a 1.2 percent MFP-adjusted CPI–U update factor to the CY 2016 ASC conversion factor for ASCs meeting the quality reporting requirements. The ASCQR Program affected payment rates beginning in CY 2014 and, under this program, there is a 2.0 percentage point reduction to the CPI–U for ASCs that fail to meet the ASCQR Program requirements. We proposed to reduce the CPI–U update of 1.7 percent by 2.0 percentage points for ASCs that do not meet the quality reporting requirements and then apply the 0.5 percentage point MFP adjustment. Therefore, we proposed to apply a −0.8 percent MFP-adjusted CPI–U update factor to the CY 2016 ASC conversion factor for ASCs not meeting the quality reporting requirements. We also proposed that if more recent data are subsequently available (for example, a more recent estimate of the CY 2017 CPI–U update and MFP adjustment), we would use such data, if appropriate, to determine the CY 2017 ASC update for the final rule with comment period.

For CY 2017, we proposed to adjust the CY 2016 ASC conversion factor ($44.190) by the proposed wage index budget neutrality factor of 0.9992 in addition to the MFP-adjusted CPI–U update factor of 1.2 percent discussed above, which resulted in a proposed CY 2017 ASC conversion factor of $44.684 for ASCs meeting the quality reporting requirements. For ASCs not meeting the quality reporting requirements, we proposed to adjust the CY 2016 ASC conversion factor ($44.190) by the proposed wage index budget neutrality factor of 0.9992 in addition to the MFP-adjusted CPI–U update factor of −0.8 percent discussed above, which resulted in a proposed CY 2017 ASC conversion factor of $43.801.

We invited public comments on these proposals.

Comment: Several commenters suggested that CMS replace the CPI–U as the update mechanism for ASC payments with the hospital market basket. The commenters stated that the CPI–U measures inflation in a basket of consumer goods atypical of what ASCs purchase. In addition, the commenters stated that the Affordable Care Act requires CMS to reduce the update by a measure of productivity gains, which inappropriately subjects ASCs to two productivity adjustments: Improvements reflected in the price of consumer purchased goods; and the additional statutorily required reduction. The commenters believed that the hospital market basket would be the most appropriate update for ASCs; they indicated that there are various alternatives within the CPI–U that CMS could explore that more accurately reflect the economic climate in the ASC environment. MedPAC acknowledged that there may be a burden associated with requiring ASCs to submit cost reports, but recommended that CMS collect some sort of ASC cost data to determine whether an existing Medicare index is a good proxy or if there should be an ASC-specific market basket.

Response: As we have stated in response to similar comments in the past (for example, 77 FR 68465; 78 FR 75088 through 75089; 79 FR 66939; and 80 FR 70501), we continue to believe that, while commenters believed that the items included in the CPI–U index may not adequately measure inflation for the goods and services provided by ASCs, the hospital market basket does not align with the cost structures of ASCs. Hospitals provide a much wider range of services, such as room and board and emergency services, and the costs associated with providing these services are not part of the ASC cost structure. Therefore, at this time, we do not believe that it is appropriate to use the hospital market basket for the ASC annual update. We recognize that the CPI–U is an output price index that accounts for productivity. However, section 1833(i)(2)(D)(v) of the Act requires the agency to reduce the annual update factor by the MFP adjustment. For the reasons stated above, we do not believe that the hospital market basket appropriately reflects the cost structures of ASCs, and because we do not have cost data on ASCs, we are continuing to use the CPI–U which we believe provides a reasonable approximation of the price increases facing ASCs. We will continue to explore the feasibility of collecting ASC cost data. However, based on our past experience, we do not believe that collecting such data through surveys would be productive.

After consideration of the public comments we received, we are finalizing our proposal to apply our established methodology for determining the final CY 2017 ASC conversion factor. Using more complete CY 2015 data for this final rule with comment period than were available for the proposed rule, we calculated a wage index budget neutrality adjustment of 0.9996. Based on IGI's 2016 third quarter forecast, the CPI–U for the 12-month period ending with the midpoint of CY 2017 is now projected to be 2.2 percent, while the MFP adjustment (as discussed in the CY 2011 MPFS final rule with comment period (75 FR 73394 through 73396), and revised in the CY 2012 MPFS final rule with comment period (76 FR 73300 through 73301) and in the CY 2016 OPPS/ASC final rule with comment period (80 FR 70500 through 70501)) is 0.3 percent, resulting in an MFP-adjusted CPI–U update factor of 1.9 percent for ASCs that meet the quality reporting requirements. The final ASC conversion factor of $45.030, for ASCs that meet the quality reporting requirements, is the product of the CY 2016 conversion factor of $44.190 multiplied by the wage index budget neutrality adjustment of 0.9996 and the MFP-adjusted CPI–U payment update of

1.9 percent. For ASCs that do not meet the quality reporting requirements, we are reducing the CPI–U update of 2.2 percent by 2.0 percentage points and then we are applying the 0.3 percentage point MFP adjustment, resulting in a −0.1 percent MFP adjusted CPI–U update factor. The final ASC conversion factor of $44.330 for ASCs that do not meet the quality reporting requirements is the product of the CY 2016 conversion factor of $44.190 multiplied by the wage index budget neutrality adjustment of 0.9996 and the MFP-adjusted CPI–U payment update of −0.1 percent.

3. Display of CY 2017 ASC Payment Rates

Addenda AA and BB to this final rule with comment period (which are available via the Internet on the CMS Web site) display the updated ASC payment rates for CY 2017 for covered surgical procedures and covered ancillary services, respectively. For those covered surgical procedures and covered ancillary services where the payment rate is the lower of the final rates under the ASC standard ratesetting methodology and the MPFS final rates, the final payment indicators and rates set forth in this final rule with comment period are based on a comparison using the final MPFS rates that will be effective January 1, 2017. For a discussion of the MPFS rates, we refer readers to the CY 2017 MPFS final rule with comment period.

The final payment rates included in these addenda reflect the full ASC payment update and not the reduced payment update used to calculate payment rates for ASCs not meeting the quality reporting requirements under the ASCQR Program. These addenda contain several types of information related to the final CY 2017 payment rates. Specifically, in Addendum AA, a ''Y'' in the column titled ''To be Subject to Multiple Procedure Discounting'' indicates that the surgical procedure would be subject to the multiple procedure payment reduction policy. As discussed in the CY 2008 OPPS/ASC final rule with comment period (72 FR 66829 through 66830), most covered surgical procedures are subject to a 50-percent reduction in the ASC payment for the lower-paying procedure when more than one procedure is performed in a single operative session.

Display of the comment indicator ''CH'' in the column titled ''Comment Indicator'' indicates a change in payment policy for the item or service, including identifying discontinued HCPCS codes, designating items or services newly payable under the ASC payment system, and identifying items or services with changes in the ASC payment indicator for CY 2017. Display of the comment indicator ''NI'' in the column titled ''Comment Indicator'' indicates that the code is new (or substantially revised) and that comments will be accepted on the interim payment indicator for the new code. Display of the comment indicator ''NP'' in the column titled ''Comment Indicator'' indicates that the code is new (or substantially revised) and that comments will be accepted on the ASC payment indicator for the new code.

The values displayed in the column titled ''CY 2017 Payment Weight'' are the final relative payment weights for each of the listed services for CY 2017. The final relative payment weights for all covered surgical procedures and covered ancillary services where the ASC payment rates are based on OPPS relative payment weights were scaled for budget neutrality. Therefore, scaling was not applied to the device portion of the device-intensive procedures, services that are paid at the MPFS nonfacility PE RVU-based amount, separately payable covered ancillary services that have a predetermined national payment amount, such as drugs and biologicals and brachytherapy sources that are separately paid under the OPPS, or services that are contractor-priced or paid at reasonable cost in ASCs.

To derive the final CY 2017 payment rate displayed in the ''Final CY 2017 Payment Rate'' column, each ASC payment weight in the ''Final CY 2017 Payment Weight'' column was multiplied by the CY 2017 conversion factor of $45.030. The conversion factor includes a budget neutrality adjustment for changes in the wage index values and the annual update factor as reduced by the productivity adjustment (as discussed in section XII.G.2.b. of this final rule with comment period).

In Addendum BB, there are no relative payment weights displayed in the ''Final CY 2017 Payment Weight'' column for items and services with predetermined national payment amounts, such as separately payable drugs and biologicals. The ''Final CY 2017 Payment'' column displays the CY 2017 national unadjusted ASC payment rates for all items and services. The CY 2017 ASC payment rates listed in Addendum BB for separately payable drugs and biologicals are based on ASP data used for payment in physicians' offices in October 2016 through December 2016.

Addendum EE provides the HCPCS codes and short descriptors for surgical procedures that we are excluding from payment in ASCs for CY 2017.

XIII. Requirements for the Hospital Outpatient Quality Reporting (OQR) Program

A. Background

1. Overview

CMS seeks to promote higher quality and more efficient healthcare for Medicare beneficiaries. In pursuit of these goals, CMS has implemented quality reporting programs for multiple care settings including the quality reporting program for hospital outpatient care, known as the Hospital Outpatient Quality Reporting (OQR) Program, formerly known as the Hospital Outpatient Quality Data Reporting Program (HOP QDRP). The Hospital OQR Program has generally been modeled after the quality reporting program for hospital inpatient services known as the Hospital Inpatient Quality Reporting (IQR) Program (formerly known as the Reporting Hospital Quality Data for Annual Payment Update (RHQDAPU) Program).

In addition to the Hospital IQR and Hospital OQR Programs, CMS has implemented quality reporting programs for other care settings that provide financial incentives for the reporting of quality data to CMS. These additional programs include reporting for care furnished by:

- Physicians and other eligible professionals, under the Physician Quality Reporting System (PQRS, formerly referred to as the Physician Quality Reporting Program Initiative (PQRI));
- Inpatient rehabilitation facilities, under the Inpatient Rehabilitation Facility Quality Reporting Program (IRF QRP);
- Long-term care hospitals, under the Long-Term Care Hospital Quality Reporting Program (LTCH QRP);
- PPS-exempt cancer hospitals, under the PPS-Exempt Cancer Hospital Quality Reporting (PCHQR) Program;
- Ambulatory surgical centers, under the Ambulatory Surgical Center Quality Reporting (ASCQR) Program;
- Inpatient psychiatric facilities, under the Inpatient Psychiatric Facility Quality Reporting (IPFQR) Program;
- Home health agencies, under the Home Health Quality Reporting Program (HH QRP); and
- Hospices, under the Hospice Quality Reporting Program (HQRP).

In addition, CMS has implemented several value-based purchasing programs, including the Hospital Value-Based Purchasing (VBP) Program and the End-Stage Renal Disease (ESRD)

Quality Incentive Program (QIP), that link payment to performance. In implementing the Hospital OQR Program and other quality reporting programs, we have focused on measures that have high impact and support national priorities for improved quality and efficiency of care for Medicare beneficiaries as reflected in the National Quality Strategy (NQS) and the CMS Quality Strategy, as well as conditions for which wide cost and treatment variations have been reported, despite established clinical guidelines. To the extent possible under various authorizing statutes, our ultimate goal is to align the clinical quality measure requirements of the various quality reporting programs. As appropriate, we will consider the adoption of measures with electronic specifications to enable the collection of this information as part of care delivery. We refer readers to the CY 2013 OPPS/ASC final rule with comment period (77 FR 68467 through 68469) for a discussion on the principles underlying consideration for future measures that we intend to use in implementing this and other quality reporting programs.

2. Statutory History of the Hospital OQR Program

We refer readers to the CY 2011 OPPS/ASC final rule with comment period (75 FR 72064 through 72065) for a detailed discussion of the statutory history of the Hospital OQR Program.

B. Hospital OQR Program Quality Measures

1. Considerations in the Selection of Hospital OQR Program Quality Measures

We refer readers to the CY 2012 OPPS/ASC final rule with comment period (76 FR 74458 through 74460) for a detailed discussion of the priorities we consider for the Hospital OQR Program quality measure selection. In the CY 2017 OPPS/ASC proposed rule (81 FR 45710), we did not propose any changes to our measure selection policy.

2. Retention of Hospital OQR Program Measures Adopted in Previous Payment Determinations

We previously adopted a policy to retain measures from the previous year's Hospital OQR Program measure set for subsequent years' measure sets in the CY 2013 OPPS/ASC final rule with comment period (77 FR 68471). Quality measures adopted in a previous year's rulemaking are retained in the Hospital OQR Program for use in subsequent years unless otherwise specified. We refer readers to that rule for more information. In the CY 2017 OPPS/ASC proposed rule (81 FR 45710), we did not propose any changes to our retention policy for previously adopted measures.

3. Removal of Quality Measures From the Hospital OQR Program Measure Set

a. Considerations in Removing Quality Measures From the Hospital OQR Program

In the FY 2010 IPPS/LTCH PPS final rule (74 FR 43863), for the Hospital IQR Program, we finalized a process for immediate retirement, which we later termed ''removal,'' of Hospital IQR Program measures based on evidence that the continued use of the measure as specified raised patient safety concerns. We adopted the same immediate measure retirement policy for the Hospital OQR Program in the CY 2010 OPPS/ASC final rule with comment period (74 FR 60634 through 60635). We refer readers to the CY 2013 OPPS/ASC final rule with comment period (77 FR 68472 through 68473) for a discussion of our reasons for changing the term ''retirement'' to ''removal'' in the Hospital OQR Program. In the CY 2017 OPPS/ASC proposed rule (81 FR 45710), we did not propose any changes to our policy to immediately remove measures as a result of patient safety concerns.

In the CY 2013 OPPS/ASC final rule with comment period, we finalized a set of criteria for determining whether to remove measures from the Hospital OQR Program. We refer readers to the CY 2013 OPPS/ASC final rule with comment period (77 FR 68472 through 68473) for a discussion of our policy on removal of quality measures from the Hospital OQR Program. The benefits of removing a measure from the Hospital OQR Program will be assessed on a case-by-case basis (79 FR 66941 through 66942). We note that, under this case-by-case approach, a measure will not be removed solely on the basis of meeting any specific criterion. We refer readers to the CY 2013 OPPS/ASC final rule with comment period (77 FR 68472 through 68473) for our list of factors considered in removing measures from the Hospital OQR Program.

In the CY 2017 OPPS/ASC proposed rule (81 FR 45710), we did not propose any changes to our measure removal policy.

b. Criteria for Removal of ''Topped-Out'' Measures

We refer readers to CY 2015 OPPS/ASC final rule with comment period where we finalized our proposal to refine the criteria for determining when a measure is ''topped-out'' (79 FR 66942). In the CY 2017 OPPS/ASC proposed rule (81 FR 45710), we did not propose any changes to our ''topped-out'' criteria policy.

4. Hospital OQR Program Quality Measures Adopted in Previous Rulemaking

We refer readers to the CY 2016 OPPS/ASC final rule with comment period (80 FR 70516) for the previously finalized measure set for the Hospital OQR Program CY 2019 payment determination and subsequent years. These measures also are listed below.

HOSPITAL OQR PROGRAM MEASURE SET PREVIOUSLY ADOPTED FOR THE CY 2019 PAYMENT DETERMINATION AND SUBSEQUENT YEARS

NQF #	Measure name
0287	OP–1: Median Time to Fibrinolysis.†
0288	OP–2: Fibrinolytic Therapy Received Within 30 Minutes of ED Arrival.
0290	OP–3: Median Time to Transfer to Another Facility for Acute Coronary Intervention.
0286	OP–4: Aspirin at Arrival.†
0289	OP–5: Median Time to ECG.†
0514	OP–8: MRI Lumbar Spine for Low Back Pain.
N/A	OP–9: Mammography Follow-up Rates.
N/A	OP–10: Abdomen CT—Use of Contrast Material.
0513	OP–11: Thorax CT—Use of Contrast Material.
N/A	OP–12: The Ability for Providers with HIT to Receive Laboratory Data Electronically Directly into their ONC-Certified EHR System as Discrete Searchable Data.
0669	OP–13: Cardiac Imaging for Preoperative Risk Assessment for Non-Cardiac, Low-Risk Surgery.
N/A	OP–14: Simultaneous Use of Brain Computed Tomography (CT) and Sinus Computed Tomography (CT).

HOSPITAL OQR PROGRAM MEASURE SET PREVIOUSLY ADOPTED FOR THE CY 2019 PAYMENT DETERMINATION AND SUBSEQUENT YEARS—Continued

NQF #	Measure name
0491	OP–17: Tracking Clinical Results between Visits.†
0496	OP–18: Median Time from ED Arrival to ED Departure for Discharged ED Patients.
N/A	OP–20: Door to Diagnostic Evaluation by a Qualified Medical Professional.
0662	OP–21: Median Time to Pain Management for Long Bone Fracture.
0499	OP–22: Left Without Being Seen.†
0661	OP–23: Head CT or MRI Scan Results for Acute Ischemic Stroke or Hemorrhagic Stroke who Received Head CT or MRI Scan Interpretation Within 45 minutes of ED Arrival.
N/A	OP–25: Safe Surgery Checklist Use.
N/A	OP–26: Hospital Outpatient Volume on Selected Outpatient Surgical Procedures.*
0431	OP–27: Influenza Vaccination Coverage among Healthcare Personnel.
0658	OP–29: Appropriate Follow-Up Interval for Normal Colonoscopy in Average Risk Patients.**
0659	OP–30: Colonoscopy Interval for Patients with a History of Adenomatous Polyps—Avoidance of Inappropriate Use.**
1536	OP–31: Cataracts: Improvement in Patient's Visual Function within 90 Days Following Cataract Surgery.***
2539	OP–32: Facility 7-Day Risk-Standardized Hospital Visit Rate after Outpatient Colonoscopy.
1822	OP–33: External Beam Radiotherapy for Bone Metastases.

† We note that NQF endorsement for this measure was removed.
* OP–26: Procedure categories and corresponding HCPCS codes are located at: *https://www.qualitynet.org/dcs/ContentServer?c=Page&pagename=QnetPublic%2FPage%2FQnetTier3&cid=1196289981244*.
** We note that measure name was revised to reflect NQF title.
*** Measure voluntarily collected as set forth in section XIII.D.3.b. of the CY 2015 OPPS/ASC final rule with comment period (79 FR 66946 through 66947).

5. New Hospital OQR Program Quality Measures for the CY 2020 Payment Determinations and Subsequent Years

In the CY 2017 OPPS/ASC proposed rule (81 FR 45711 through 45720), for the CY 2020 payment determination and subsequent years, we proposed a total of seven new measures—two of which are claims-based measures and five of which are Outpatient and Ambulatory Surgery Consumer Assessment of Healthcare Providers and Systems (OAS CAHPS) Survey-based measures. The claims-based measures are: (1) OP–35: Admissions and Emergency Department Visits for Patients Receiving Outpatient Chemotherapy; and (2) OP–36: Hospital Visits after Hospital Outpatient Surgery (NQF #2687). The OAS CAHPS Survey-based measures are: (1) OP–37a: OAS CAHPS—About Facilities and Staff; (2) OP–37b: OAS CAHPS—Communication About Procedure; (3) OP–37c: OAS CAHPS—Preparation for Discharge and Recovery; (4) OP–37d: OAS CAHPS—Overall Rating of Facility; and (5) OP–37e: OAS CAHPS—Recommendation of Facility. We discuss these measures in detail below.

We received a few comments that apply across all proposed measures and will address those first.

Comment: Several commenters expressed concern that only one of the seven measures proposed by CMS is NQF-endorsed and, therefore, questioned whether the measures were accurate and a fair representation of hospital performance.

Response: Section 1833(t)(17)(C)(i) of the Act does not require that each measure we adopt for the Hospital OQR Program be endorsed by a national consensus building entity, or the NQF specifically. Under this provision, the Secretary has further authority to adopt non-NQF-endorsed measures. While we strive to adopt NQF-endorsed measures when possible, we believe the requirement that measures reflect consensus among affected parties can be achieved in other ways, including through the measure development process, stakeholder input via a Technical Expert Panel (TEP), broad acceptance and use of the measure, and public comments. As part of that process, we sought and received extensive input on these measures from stakeholders and clinical experts.

We believe that these measures reflect consensus among the affected parties, because the MAP, which represents stakeholder groups, reviewed and conditionally supported the measures for use in the program. The MAP conditionally supported OP–35: Admissions and Emergency Department (ED) Visits for Patient Receiving Outpatient Chemotherapy.[7] In addition, the MAP supported the OP–36: Hospital Visits after Hospital Outpatient Surgery measure for program use citing the vital importance of measures that help facilities reduce unnecessary hospital visits, and the measure received NQF endorsement on September 3, 2015.[8 9] Furthermore, the MAP encouraged continued development of OP–37a–e: Consumer Assessment of Healthcare Providers and Systems Outpatient and Ambulatory Surgery Survey measures, and the MAP stated that these are high impact measures that will improve both quality and efficiency of care and be meaningful to consumers.[10]

In evaluating and selecting these measures for inclusion in the Hospital OQR Program, we considered whether there were other available measures that have been endorsed or adopted by the NQF that assess the areas in focus for quality measurement and reporting. We were unable to identify other NQF-endorsed measures. However, we developed these measures using the same rigorous process that we have used to develop other publicly reported measures. Lastly, it is our priority to ensure we select measures that are appropriate for the Hospital OQR Program that further our goals under the National Quality Strategy and CMS Quality Strategy.

[7] Spreadsheet of MAP 2016 Final Recommendations available at: *http://www.qualityforum.org/ProjectMaterials.aspx?projectID=75369*.

[8] MAP 2016 Considerations for Implementing Measures in Federal Programs: Hospitals. Final Report. February 15, 2016. Available at: *http://www.qualityforum.org/WorkArea/linkit.aspx?LinkIdentifier=id&ItemID=81688*.

[9] Spreadsheet of MAP 2016 Final Recommendations. February 1, 2016. Available at: *http://www.qualityforum.org/WorkArea/linkit.aspx?LinkIdentifier=id&ItemID=81593*.

[10] National Quality Forum. MAP 2015 Final Recommendations to HHS and CMS. Rep. National Quality Forum, Jan. 2015. Available at: *http://www.qualityforum.org/WorkArea/linkit.aspx?LinkIdentifier=id&ItemID=78711*.

a. OP–35: Admissions and Emergency Department (ED) Visits for Patients Receiving Outpatient Chemotherapy Measure

(1) Background

Cancer care is a priority area for outcome measurement, because cancer is an increasingly prevalent condition associated with considerable morbidity and mortality. In 2015, there were more than 1.6 million new cases of cancer in the United States.[11] Each year, about 22 percent of cancer patients receive chemotherapy,[12] with Medicare payments for cancer treatment totaling $34.4 billion in 2011, almost 10 percent of Medicare fee-for-service (FFS) dollars.[13] With an increasing number of cancer patients receiving chemotherapy in a hospital outpatient department,[14] a growing body of peer-reviewed literature identifies unmet needs in the care provided to these patients. This gap in care may be due to reasons including: (1) The large burden and delayed onset of chemotherapy side effects that patients must manage at home; (2) patients' assumption that little can be done about their symptoms, which leads to them to not seek medical assistance; and (3) limited access to providers who can tailor care to the individual.[15] As a result, cancer patients who receive chemotherapy in a hospital outpatient department require more frequent acute care in the hospital setting and experience more adverse events than cancer patients who are not receiving chemotherapy.[16] [17] [18]

Hospital admissions and ED visits among cancer patients receiving chemotherapy often are caused by predictable, and manageable, side effects from treatment. Recent studies of patients receiving chemotherapy in the outpatient setting show the most commonly cited symptoms and reasons for hospital visits are pain, anemia, fatigue, nausea and/or vomiting, fever and/or febrile neutropenia, shortness of breath, dehydration, diarrhea, and anxiety/depression.[19] These hospital visits may be due to conditions related to the cancer itself or to side effects of chemotherapy. However, treatment plans and guidelines exist to support the management of these conditions. Hospitals that provide outpatient chemotherapy should proactively implement appropriate care to minimize the need for acute hospital care for these adverse events. Guidelines from the American Society of Clinical Oncology, the National Comprehensive Cancer Network, the Oncology Nursing Society, the Infectious Diseases Society of America, and other professional societies recommend evidence-based interventions to prevent and treat common side effects and complications of chemotherapy.[20] Appropriate outpatient care should curb potentially avoidable hospital admissions and ED visits for these issues and improve cancer patients' quality of life. We believe that including a measure monitoring admissions and ED visits for patients that receive outpatient chemotherapy in the Hospital OQR Program and publicly reporting results would encourage providers to improve their quality of care and lower rates of adverse events that lead to hospital admissions or ED visits after outpatient chemotherapy.

(2) Overview of Measure

We believe it is important to reduce adverse patient outcomes associated with chemotherapy treatment in the hospital outpatient setting. Therefore, in the CY 2017 OPPS/ASC proposed rule (81 FR 45711 through 45714), we proposed to adopt OP–35: Admissions and Emergency Department (ED) Visits for Patients Receiving Outpatient Chemotherapy in the Hospital OQR Program for the CY 2020 payment determination and subsequent years. This measure aims to assess the care provided to cancer patients and encourage quality improvement efforts to reduce the number of potentially avoidable inpatient admissions and ED visits among cancer patients receiving chemotherapy in a hospital outpatient setting. Improved hospital management of these potentially preventable symptoms—including anemia, dehydration, diarrhea, emesis, fever, nausea, neutropenia, pain, pneumonia, or sepsis—can reduce admissions and ED visits for these conditions. Measuring potentially avoidable admissions and ED visits for cancer patients receiving outpatient chemotherapy will provide hospitals with an incentive to improve the quality of care for these patients by taking steps to prevent and better manage side effects and complications from treatment.

In addition, this measure addresses the National Quality Strategy priority of "promoting the most effective prevention and treatment practices" for the leading causes of mortality. We expect the measure would promote improvement in patient care over time because measuring this area, coupled with transparency in publicly reporting scores, will make potentially preventable hospital inpatient admissions and ED visits following chemotherapy more visible to providers and patients and will encourage providers to incorporate quality improvement activities in order to reduce these visits. This risk-standardized quality measure will address an existing information gap and promote quality improvement by

[11] American Cancer Society. "Cancer Facts & Figures 2015." Available at: *http://www.cancer.org/acs/groups/content/@editorial/documents/document/acspc-044552.pdf.*

[12] Klodziej, M., J.R. Hoverman, J.S. Garey, J. Espirito, S. Sheth, A. Ginsburg, M.A. Neubauer, D. Patt, B. Brooks, C. White, M. Sitarik, R. Anderson, and R. Beveridgel. "Benchmarks for Value in Cancer Care: An Analysis of a Large Commercial Population." *Journal of Oncology Practice*, Vol. 7, 2011, pp. 301–306.

[13] Sockdale, H., K. Guillory. "Lifeline: Why Cancer Patients Depend on Medicare for Critical Coverage." Available at: *http://www.acscan.org/content/wp-content/uploads/2013/06/2013-Medicare-Chartbook-Online-Version.pdf.*

[14] Vandervelde, Aaron, Henry Miller, and JoAnna Younts. "Impact on Medicare Payments of Shift in Site of Care for Chemotherapy Administration." Washington, DC: Berkeley Research Group, June 2014. Available at: *http://www.communityoncology.org/UserFiles/BRG_340B_SiteofCare_ReportF_6-9-14.pdf.* Accessed September 16, 2015.

[15] McKenzie, H., L. Hayes, K. White, K. Cox, J. Fethney, M. Boughton, and J. Dunn. "Chemotherapy Outpatients' Unplanned Presentations to Hospital: A Retrospective Study." *Supportive Care in Cancer,* Vol. 19, No. 7, 2011, pp. 963–969.

[16] Sadik, M., K. Ozlem, M. Huseyin, B. AliAyberk, S. Ahmet, and O. Ozgur. "Attributes of Cancer Patients Admitted to the Emergency Department in One Year." *World Journal of Emergency Medicine,* Vol. 5, No. 2, 2014, pp. 85–90. Available at: *http://www.ncbi.nlm.nih.gov/pmc/articles/PMC4129880/#ref4.*

[17] Hassett, M.J., J. O'Malley, J.R. Pakes, J.P. Newhouse, and C.C. Earle. "Frequency and Cost of Chemotherapy-Related Serious Adverse Effects in a Population Sample of Women with Breast Cancer." *Journal of the National Cancer Institute,* Vol. 98, No. 16, 2006, pp. 1108–1117.

[18] Foltran, L., G. Aprile, F.E. Pisa, P. Ermacora, N. Pella, E. Iaiza, E. Poletto, SE. Lutrino, M. Mazzer, M. Giovannoni, G.G. Cardellino, F. Puglisi, and G. Fasola. "Risk of Unplanned Visits for Colorectal Cancer Outpatients Receiving Chemotherapy: A Case-Crossover Study." *Supportive Care in Cancer,* Vol. 22, No. 9, 2014, pp. 2527–2533.

[19] Hassett, M.J., J. O'Malley, J.R. Pakes, J.P. Newhouse, and C.C. Earle. "Frequency and Cost of Chemotherapy-Related Serious Adverse Effects in a Population Sample of Women with Breast Cancer." *Journal of the National Cancer Institute,* Vol. 98, No. 16, 2006, pp. 1108–1117.

[20] Several evidence-based guidelines and interventions exist across professional societies. Here we provide three example citations: (1) National Comprehensive Cancer Network. "NCCN Clinical Practice Guidelines in Oncology Version 2.2016. Cancer- and Chemotherapy-Induced Anemia." Fort Washington, PA: NCCN, 2015; (2) Oncology Nursing Society. "Evidence-Based Interventions to Prevent, Manage, and Treat Chemotherapy-Induced Nausea and Vomiting." Available at: *http://www.ons.org/Research/PEP/Nausea*; (3) Freifeld, A.G., E.J. Bow, K.A. Sepkowitz, M.J. Boeckh, J.I. Ito, C.A. Mullen, I.I. Raad, K.V. Rolston, J.H. Young, and J.R. Wingard. "Clinical Practice Guideline for the Use of Antimicrobial Agents in Neutropenic Patients with Cancer: 2010 Update by the Infections Diseases Society of America." *Clinical Infectious Diseases,* vol. 52, no. 4: 2011, pp. e56–e93.

providing feedback to hospitals and physicians, as well as transparency for patients on the rates and variation across hospitals in these potentially preventable admissions and ED visits following chemotherapy.

The measure is well-defined, precisely specified, and allows for valid comparisons of quality among hospitals. The measure includes only outcome conditions demonstrated in the literature as being potentially preventable in this patient population, is important to patients, is specified to attribute an outcome to other hospital(s) that provided outpatient chemotherapy in the 30 days preceding the outcome, and is risk-adjusted for patient demographics, cancer type, clinical comorbidities, and treatment exposure. Validity testing demonstrated that the measure data elements produce measure scores that correctly reflect the quality of care provided and adequately identify differences in quality. We conducted additional assessments to determine the impact of including sociodemographic status (SDS) factors in the risk-adjustment model, and NQF will review our methodology and findings under the NQF trial period described below.

Section 1890A(a)(2) of the Act outlines the prerulemaking process established under section 1890A of the Act, which requires the Secretary to make available to the public, by December 1 of each year, a list of quality and efficiency measures that the Secretary is considering. This measure (MUC ID: 15–951) was included on a publicly available document titled ''List of Measures under Consideration for December 1, 2015'' on the CMS Web site at: *https://www.cms.gov/Medicare/Quality-Initiatives-Patient-Assessment-Instruments/QualityMeasures/Downloads/2015-Measures-Under-Consideration-List.pdf* in compliance with section 1890A(a)(2) of the Act.

The Measure Applications Partnership (MAP), which represents stakeholder groups, conditionally supported the measure recommending that it be submitted for National Quality Forum (NQF) endorsement with a special consideration for SDS adjustments and the selection of exclusions. MAP members noted the potential for the measure to increase care coordination and spur patient activation. We refer readers to the Spreadsheet of MAP 2016 Final Recommendations available at: *http://www.qualityforum.org/ProjectMaterials.aspx?projectID=75369*.

We understand the important role that SDS plays in the care of patients. However, we continue to have concerns about holding hospitals to different standards for the outcomes of their patients of diverse SDS because we do not want to mask potential disparities or minimize incentives to improve the outcomes of disadvantaged populations. For all our measures, we routinely monitor the impact of SDS on hospitals' results. We will continue to investigate methods to ensure all hospitals are treated as fairly as possible within the program.

The NQF is currently undertaking a 2-year trial period in which new measures and measures undergoing maintenance review will be assessed to determine if risk-adjusting for SDS factors is appropriate. This trial entails temporarily allowing inclusion of sociodemographic factors in the risk-adjustment approach for some performance measures. At the conclusion of the trial, NQF will issue recommendations on future permanent inclusion of SDS factors. During the trial, measure developers are expected to submit information such as analyses and interpretations as well as performance scores with and without SDS factors in the risk-adjustment model.

Furthermore, the Office of the Assistant Secretary for Planning and Evaluation (ASPE) is conducting research to examine the impact of SDS on quality measures, resource use, and other measures under the Medicare program as directed by the IMPACT Act. We will closely examine the findings of the ASPE reports and consider how they apply to our quality programs in future rulemaking, as appropriate and feasible. We look forward to working with stakeholders in this process.

In addition, several MAP members noted the alignment of this measure concept with other national priorities, such as improving patient experience, and other national initiatives to improve cancer care, as well as the importance of this measure to raise awareness and create a feedback loop for providers (meeting transcript available at: *http://www.qualityforum.org/WorkArea/linkit.aspx?LinkIdentifier=id&ItemID=81391*). As required under section 1890A(a)(4) of the Act, we considered the input and recommendations provided by the MAP in selecting measures to propose for the Hospital OQR Program.

Section 1833(t)(17)(C)(i) of the Act requires the Secretary, except as the Secretary may otherwise provide, to develop measures appropriate for the measurement of the quality of care furnished by hospitals in outpatient settings that reflect consensus among affected parties, and to the extent feasible and practicable, that include measures set forth by one or more national consensus building entities. However, we note that section 1833(i)(17)(C)(i) of the Act does not require that each measure we adopt for the Hospital OQR Program be endorsed by a national consensus building entity, or by the NQF specifically. As stated in the CY 2012 OPPS/ASC final rule with comment period (76 FR 74465 and 74505), we believe that consensus among affected parties can be reflected through means other than NQF endorsement, including consensus achieved during the measure development process, consensus shown through broad acceptance and use of measures, and consensus through public comment.

We believe that this proposed measure reflects consensus among the affected parties, because the MAP, which represents stakeholder groups, reviewed and conditionally supported the measure for use in the program. Further, the measure was subject to public input during the MAP and measure development processes, with some public commenters agreeing with the MAP's conclusions on the measure (MUC ID: 15–951; Spreadsheet of MAP 2016 Final Recommendations available at: *http://www.qualityforum.org/ProjectMaterials.aspx?projectID=75369*). We also note that we submitted this measure to NQF as part of the NQF Cancer Consensus Development Project in March 2016, and it is currently undergoing review.

Currently, there are no publicly available quality of care reports for providers or hospitals that provide outpatient chemotherapy treatment. Thus, adoption of this measure would provide an opportunity to enhance the information available to patients choosing among providers who offer outpatient chemotherapy. We believe this measure would reduce adverse patient outcomes after outpatient chemotherapy by capturing and making more visible to providers and patients hospital admissions and emergency department visits for symptoms that are potentially preventable through high quality outpatient care. Further, providing outcome rates to providers will make visible to clinicians, meaningful quality differences and encourage improvement.

(3) Data Sources

The proposed OP–35: Admissions and Emergency Department (ED) Visits for Patients Receiving Outpatient Chemotherapy measure is a claims-based measure. It uses Medicare Part A and Part B administrative claims data from Medicare FFS beneficiaries receiving chemotherapy treatment in a

hospital outpatient setting. The performance period for the measure is 1 year (that is, the measure calculation includes eligible patients receiving outpatient chemotherapy during a 1-year timeframe). For example, for the CY 2020 payment determination, the performance period would be CY 2018 (that is, January 1, 2018 through December 31, 2018).

(4) Measure Calculation

The OP–35 measure involves calculating two mutually exclusive outcomes: (1) One or more inpatient admissions; or (2) one or more ED visits for any of the following diagnoses—anemia, dehydration, diarrhea, emesis, fever, nausea, neutropenia, pain, pneumonia, or sepsis—within 30 days of chemotherapy treatment among cancer patients receiving treatment in a hospital outpatient setting. These 10 conditions are potentially preventable through appropriately managed outpatient care. Therefore, two scores will be reported for this measure. A patient can only be counted for any measured outcome once, and those who experience both an inpatient admission and an ED visit during the performance period are counted towards the inpatient admission outcome. These two distinct rates provide complementary and comprehensive performance estimates of quality of care following hospital-based outpatient chemotherapy treatment. We calculate the rates separately, because the severity and cost of an inpatient admission is different from that of an ED visit, but both adverse events are important signals of quality and represent patient-important outcomes of care.

The measure derives and reports the two separate scores, one for each mutually exclusive outcome, (also referred to as the hospital-level risk-standardized admission rate (RSAR) and risk-standardized ED visit rate (RSEDR)), each calculated as the ratio of the number of ''predicted'' to the number of ''expected'' outcomes (inpatient admissions or ED visits, respectively), multiplied by the national observed rate (of inpatient admissions or ED visits). For the RSAR and RSEDR, the numerator of the ratio is the number of patients predicted to have the measured adverse outcome (an inpatient admission for RSAR or ED visit for RSEDR with one or more of the 10 diagnoses described above within 30 days) based on the hospital's performance with its observed case-mix. The denominator for each ratio is the number of patients expected to have the measured adverse outcome based on the average national performance and the hospital's observed case-mix. The national observed rate is the national unadjusted number of patients who have the adverse outcome among all qualifying patients who had at least one chemotherapy treatment in a hospital.

We define the window for identifying the outcomes of admissions and ED visits as 30 days after hospital outpatient chemotherapy treatment, as existing literature suggests the vast majority of adverse events occur within that timeframe.[21] [22] [23] Limiting the window to 30 days after each outpatient chemotherapy treatment also: (1) Helps link patients' experiences to the hospitals that provided their recent treatment, while accounting for variations in duration between outpatient treatments; (2) supports the idea that the admission is related to the management of side effects of treatment and ongoing care, as opposed to progression of the disease or other unrelated events; and (3) is a clinically reasonable timeframe to observe related side effects. For additional details on how the measure is calculated, we refer readers to: *https://www.cms.gov/Medicare/Quality-Initiatives-Patient-Assessment-Instruments/HospitalQualityInits/Measure-Methodology.html*.

(5) Cohort

The cohort includes Medicare FFS patients ages 18 years and older as of the start of the performance period with a diagnosis of any cancer (except leukemia) who received at least one hospital outpatient chemotherapy treatment at a reporting hospital during the performance period. Based on discussions with clinical and technical panel experts, the measure excludes cancer patients with a diagnosis of leukemia at any time during the performance period due to the high toxicity of treatment and recurrence of disease. Therefore, admissions for leukemia patients may not reflect poorly managed outpatient care, but rather disease progression and relapse. The measure also excludes patients who were not enrolled in Medicare FFS Parts A and B in the year before the first outpatient chemotherapy treatment during the performance period, because the risk-adjustment model (explained further below) uses claims data for the year before the first chemotherapy treatment during the performance period to identify comorbidities. Lastly, the measure excludes patients who do not have at least one outpatient chemotherapy treatment followed by continuous enrollment in Medicare FFS Parts A and B in the 30 days after the procedure, to ensure all patients have complete data available for outcome assessment.

(6) Risk Adjustment

Since the measure has two mutually exclusive outcomes (qualifying inpatient admissions and qualifying ED visits), we developed two risk-adjustment models. The only differences between the two models are the clinically relevant demographic, comorbidity, and cancer type variables used for risk adjustment. The statistical risk-adjustment model for inpatient admissions includes 20 demographic and clinically relevant risk-adjustment variables that are strongly associated with risk of one or more hospital admissions within 30 days following chemotherapy in a hospital outpatient setting. On the other hand, the statistical risk-adjustment model for ED visits include 15 demographic and clinically relevant risk-adjustment variables that are strongly associated with risk of one or more ED visits within 30 days following chemotherapy in a hospital outpatient setting. For additional methodology details, including the complete list of risk-adjustment variables, we refer readers to: *http://www.cms.gov/Medicare/Quality-Initiatives-Patient-Assessment-Instruments/HospitalQualityInits/Measure-Methodology.html*.

We invited public comments on our proposal to adopt the OP–35: Admissions and Emergency Department (ED) Visits for Patients Receiving Outpatient Chemotherapy measure to the Hospital OQR Program for the CY 2020 payment determination and subsequent years as discussed above.

Comment: Several commenters supported the adoption of the proposed OP–35: Admissions and Emergency Department (ED) Visits for Patients Receiving Outpatient Chemotherapy measure in the Hospital OQR Program. Some commenters applauded CMS for recognizing cancer care as a priority area for outcome measurement, and

[21] Aprile, G., F.E. Pisa, A. Follador, L. Foltran, F. De Pauli, M. Mazzer, S. Lutrino, C.S. Sacco, M. Mansutti, and G. Fasola. ''Unplanned Presentations of Cancer Outpatients: A Retrospective Cohort Study.'' *Supportive Care in Cancer,* Vol. 21, No. 2, 2013, pp. 397–404.

[22] Foltran, L., G. Aprile, F.E. Pisa, P. Ermacora, N. Pella, E. Iaiza, E. Poletto, SE. Lutrino, M. Mazzer, M. Giovannoni, G.G. Cardellino, F. Puglisi, and G. Fasola. ''Risk of Unplanned Visits for Colorectal Cancer Outpatients Receiving Chemotherapy: A Case-Crossover Study.'' *Supportive Care in Cancer,* Vol. 22, No. 9, 2014, pp. 2527–2533.

[23] McKenzie, H., L. Hayes, K. White, K. Cox, J. Fethney, M. Boughton, and J. Dunn. ''Chemotherapy Outpatients' Unplanned Presentations to Hospital: A Retrospective Study.'' *Supportive Care in Cancer,* Vol. 19, No. 7, 2011, pp. 963–969.

asserted this measure is particularly important as the number of cancer patients receiving chemotherapy in hospital outpatient settings is increasing. These commenters also agreed that it is imperative to include a measure to monitor admissions and ED visits for patients that receive outpatient chemotherapy in the Hospital OQR Program. Many commenters asserted that including an oncology measure would be an important step in holding hospitals accountable for the care they provide to chemotherapy patients—particularly because many of the reasons these patients are admitted to hospitals or visit the ED are for symptoms and side effects that can and should be anticipated and treated in nonacute care settings. These commenters asserted that reducing hospital admissions and ED visits will improve health outcomes and quality of life for chemotherapy patients, and the first step in doing so is to begin measuring the prevalence of these incidents. These commenters also asserted that publicly reporting results would encourage providers to improve their quality of care and lower rates of adverse events that lead to hospital admissions or ED visits after outpatient chemotherapy.

Response: We thank the commenters for their support.

Comment: Several commenters did not support the adoption of OP–35 because the measure is not NQF-endorsed, and asserted that CMS needs to obtain NQF approval prior to measure implementation to ensure that the measure is accurate, valid, and actionable.

Response: Section 1833(t)(17)(C)(i) of the Act does not require that each measure we adopt for the Hospital OQR Program be endorsed by a national consensus building entity, or the NQF specifically. Under this provision, the Secretary has further authority to adopt non endorsed measures. While we strive to adopt NQF-endorsed measures when possible, we believe the requirement that measures reflect consensus among affected parties can be achieved in other ways, including through the measure development process, through broad acceptance and use of the measure, and through public comments. As part of that process, we sought and received extensive input on the measure from stakeholders and clinical experts at multiple points during development, including from the MAP and the NQF.

Furthermore, in evaluating and selecting OP–35 for inclusion in the Hospital OQR Program, we considered whether there were other available measures that have been endorsed or adopted by the NQF that assess admissions and ED visits following outpatient chemotherapy, an important area for quality measurement and reporting. We were unable to identify any other NQF-endorsed measures. We developed OP–35 using the same rigorous process that we have used to develop other publicly reported outcome measures.

Although this measure is not currently NQF-endorsed, our background research and analyses conducted during technical development demonstrate that this measure is accurate, valid, and actionable. This measure is an important signal of high quality care, measures what it intends to measure, and is specified in a way to appropriately differentiate data available between cancer hospitals providing high and low quality care for these patients. This measure assesses an aspect of care with documented unmet patient needs resulting in reduction of patient's quality of life and increase in healthcare utilization and costs. Several studies [24] [25] [26] illustrate a gap in care for patients receiving chemotherapy in the hospital outpatient setting, as hospitals cannot effectively track the condition or status of patients after they return home following treatment. In addition, the performance rates and information provided to stakeholders are actionable and useful for quality improvement efforts by highlighting a specific gap in care for cancer patients treated at each hospital. The diagnoses measured include commonly cited reasons for unplanned hospitalizations and ED visits in this population that are considered potentially preventable through appropriately managed outpatient care. We have limited the outcome measure to these conditions in order to make the performance rate more meaningful and actionable to hospitals.

Thus, adoption of this measure would provide an opportunity to enhance the information available to patients choosing among providers who offer chemotherapy in the hospital outpatient setting. There currently remains a gap in care that leads to acute, potentially preventable hospitalizations among patients receiving chemotherapy. We note that, on average, cancer patients receiving chemotherapy have one hospital admission and two ED visits per year,[27] and therefore we believe it would be a disservice to patients to delay inclusion of the current outcome measure in quality reporting and quality improvement initiatives. As stated in the measure description above, we believe this measure would reduce adverse patient outcomes after outpatient chemotherapy by capturing and making more visible to providers and patients hospital admissions and emergency department visits for symptoms that are potentially preventable through high quality outpatient care. Further, providing outcome rates to providers will make visible to clinicians meaningful quality differences and encourage improvement.

Comment: Several commenters expressed concern that OP–35 is not risk adjusted for cancer type, SDS factors, and clinical complexity. Some commenters specifically stated that the NQF process of reviewing whether to include SDS factors in OP–35's risk-adjustment methodology is important to reflect and evaluate the effect of known disparities in access and outcomes for cancer patients in underserved areas. Some commenters asserted that OP–35 is particularly susceptible to performance variation due to SDS and factors outside the control of the hospital because chemotherapy patients may come back to an emergency department or require an inpatient admission not because of the care they received during the outpatient department visit, but because of a variety of community factors or their living conditions which may hamper the implementation of the post-discharge plan of care. One commenter further asserted that without this information, OP–35 lacks the necessary information needed to determine whether it is appropriate for public reporting.

Response: We would like to make clear that OP–35 is in fact risk-adjusted to account for the variation in patient mix and aggressiveness of treatment, and does adjust for clinical complexities

[24] Aprile, G., F.E. Pisa, A. Follador, L. Foltran, F. De Pauli, M. Mazzer, S. Lutrino, C.S. Sacco, M. Mansutti, and G. Fasola. ''Unplanned Presentations of Cancer Outpatients: A Retrospective Cohort Study.'' *Supportive Care in Cancer,* vol. 21, no. 2, 2013, pp. 397–404.

[25] Foltran, L., G. Aprile, F.E. Pisa, P. Ermacora, N. Pella, E. Iaiza, E. Poletto, SE. Lutrino, M. Mazzer, M. Giovannoni, G.G. Cardellino, F. Puglisi, and G. Fasola. ''Risk of Unplanned Visits for Colorectal Cancer Outpatients Receiving Chemotherapy: A Case-Crossover Study.'' *Supportive Care in Cancer,* vol. 22, no. 9, 2014, pp. 2527–2533.

[26] McKenzie, H., L. Hayes, K. White, K. Cox, J. Fethney, M. Boughton, and J. Dunn. ''Chemotherapy Outpatients' Unplanned Presentations to Hospital: A Retrospective Study.'' *Supportive Care in Cancer,* vol. 19, no. 7, 2011, pp. 963–969.

[27] Klodziej M, Hoverman JR, Garey JS, et al. Benchmarks for value in cancer care: An analysis of a large commercial population. J Oncol Pract. 2011;7:301–306.

including patient's age, sex, exposure (number of chemotherapy treatments during the performance period), cancer type, and certain clinical comorbidities. We refer readers to the measure specifications as originally made available in the CY 2017 OPPS/ASC proposed rule (81 FR 45722) at: *https://www.cms.gov/Medicare/Quality-Initiatives-Patient-Assessment-Instruments/HospitalQualityInits/Measure-Methodology.html*.

Regarding SDS factors, we understand the important role that SDS plays in the care of patients. However, we continue to have concerns about holding hospitals to different standards for the outcomes of their patients of diverse SDS because we do not want to mask potential disparities or minimize incentives to improve the outcomes of disadvantaged populations. For all our measures, we routinely monitor the impact of SDS on hospitals' results. We will continue to investigate methods to ensure all hospitals are treated as fairly as possible within the program.

The NQF is currently undertaking a 2-year trial period in which new measures and measures undergoing maintenance review will be assessed to determine if risk-adjusting for sociodemographic factors is appropriate. This trial entails temporarily allowing inclusion of sociodemographic factors in the risk adjustment approach for some performance measures. At the conclusion of the trial, NQF will issue recommendations on future permanent inclusion of sociodemographic factors. During the trial, measure developers are encouraged to submit information such as analyses and interpretations as well as performance scores with and without sociodemographic factors in the risk adjustment model. Several measures developed by CMS have been brought to NQF since the beginning of the trial, including OP–35. CMS, in compliance with NQF's guidance, has tested sociodemographic factors in the measures' risk models and made recommendations about whether or not to include these factors in the proposed measure. We intend to continue engaging in the NQF process as we consider the appropriateness of adjusting for sociodemographic factors in our outcome measures.

Furthermore, the Office of the Assistant Secretary for Planning and Evaluation (ASPE) is conducting research to examine the impact of sociodemographic status on quality measures, resource use, and other measures under the Medicare program as directed by the IMPACT Act. We will closely examine the findings of the ASPE reports and consider how they apply to our quality programs in future rulemaking, as appropriate and feasible. We look forward to working with stakeholders in this process.

During development of this measure, we assessed the relationship between the measure outcomes and SDS factors in accordance with NQF measure development guidelines as part of the 2-year NQF SDS trial period, available at: *http://www.qualityforum.org/WorkArea/linkit.aspx?LinkIdentifier=id&ItemID=80279*. For our analysis, we used three variables that are available within or link directly to Medicare administrative claims data for evaluation of SDS factors and may capture some of the impact of community factors on patient care: Race; Medicaid dual-eligible status; and AHRQ socioeconomic status (SES) Index score. For more information on the AHRQ SES Index score, we refer readers to: *http://archive.ahrq.gov/research/findings/final-reports/medicareindicators/medicareindicators3.html*.

The results of our data analysis demonstrate no significant associations between hospital measure performance and the three tested SDS factors—patient race, patient Medicaid dual-eligible status, and patients' neighborhood AHRQ SES Index score. Based on these results, we disagree that the measure is not susceptible to performance variation due to patient and community SDS or other factors outside the control of the hospital, such as a variety of community factors or their living conditions, which may hamper the implementation of the post-discharge plan of care. At the hospital level, there was no clear relationship between median risk-standardized rates and hospitals' case mix by these three SDS factors, and the distributions of risk-standardized rates suggested that hospitals caring for a greater percentage of low SDS patients have similar rates of inpatient admission and ED visits within 30 days of hospital-based outpatient chemotherapy. Based on these findings, our final measure specifications do not risk adjust for any of these specific SDS factors. As a result, the measure does not currently adjust for SDS factors beyond those that are already accounted for as listed above (that is, age, sex, and clinical complexity).

Furthermore, based on these analyses and results, we believe this measure, as specified, effectively adjusts for patient-mix and can be publicly reported. We refer readers to *https://www.cms.gov/Medicare/Quality-Initiatives-Patient-Assessment-Instruments/HospitalQualityInits/Measure-Methodology.html* for the more information on our SDS analysis and results.

Comment: Some commenters expressed concern with the validity and reliability of the measure. Some commenters specifically stated that the NQF's Cancer Project 2015–2017 Committee failed to endorse the measure, citing reliability concerns. Commenters urged CMS to expedite additional measure testing, including sensitivity and specificity testing.

Response: As stated by the commenters, the NQF's Cancer Project 2015–2017 Committee did not endorse the proposed measure due to concerns regarding reliability. However, we disagree about the concerns with the measure's reliability. We believe that this measure is sufficiently reliable to be included in the Hospital OQR Program. We conducted several assessments of reliability during development using two different approaches given data limitations during testing. We first used the test-retest method to calculate reliability from one year of data, and then used the Intraclass Correlation Coefficient (ICC) and Spearman-Brown prophecy formula to estimate the reliability based on what would be expected if the sample size was increased. The Spearman-Brown prophecy formula [28] [29] is an accepted statistical method that estimates the ICC [30] based on what would be expected if the sample size was increased, to estimate the reliability score if CMS were to use a full year of data for public reporting rather than the six months of data that we used in initial testing.

Measure reliability was first calculated using a split sample of one year of data for the test-retest method.[31] We randomly split the patient cohort at each hospital into two equal halves, calculated the measure using each half, and then calculated the agreement between these two (the ''test'' and the ''retest''). Following this test-retest methodology, we calculated the Pearson correlation between the performance rate estimates in each half-year sample to assess reliability. We found the risk-standardized admission rate (RSAR) to have a reliability of 0.41 (95 percent

[28] Spearman, C. (1910). Correlation calculated from faulty data. British Journal of Psychology, 3, 171–195.

[29] Brown, W. (1910). Some experimental results in the correlation of mental abilities. British Journal of Psychology, 3, 296–322.

[30] Landis J, Koch G, The measurement of observer agreement for categorical data. Biometrics 1977;33:159–174.

[31] Rousson V, Gasser T, Seifert B. Assessing intrarater, interrater and test–retest reliability of continuous measurements. Statistics in Medicine. 2002;21:3431–3446.

confidence interval (CI): 0.37–0.45) and the risk-standardized ED visit rate (RSEDR) to have a reliability of 0.27 (95 percent CI: 0.22–0.33) which, according to Cohen's classification, represent moderate and borderline weak-to-moderate reliability, respectively. The 95 percent CI gives us a reasonable estimate of the true reliability range.

However, our reliability estimate was arguably limited by use of only a half year of split data. We expected our reliability to be higher if we increased the amount of data we used. Therefore, after submitting the measure to NQF for endorsement review, we conducted additional calculations of the reliability testing score, this time using the ICC and the Spearman-Brown prophecy formula. The Spearman-Brown prophecy formula is an accepted statistical method that estimates the ICC based on what would be expected if the sample size was increased. It therefore provides us with an estimate of what the reliability score would be if CMS were to use a full year of data for public reporting rather than the six months of data that we used. Using the Spearman-Brown prophecy formula, we estimated that our measure will have an ICC of 0.63 (95 percent CI: 0.58–0.68) for RSAR and 0.47 percent (95 percent CI: 0.40–0.53) for RSEDR using a full year of data.

The NQF considers ICC values ranging from 0.41 to 0.60 as ''moderate'' reliability, and 0.61 to 0.80 as ''strong'' reliability.[32] Our calculated ICC values of 0.63 for RSAR and 0.47 for RSEDR are interpreted as ''strong'' and ''moderate'' reliability, respectively. Therefore, we believe the measure is sufficiently reliable.

We also disagree with the concerns regarding the validity of the measure. We interpret the commenter's concern about validity to be about the degree to which the measure is measuring what it is intended to measure (that is, construct validity). Measure testing results demonstrated the measure's validity both at the conceptual level and empirically. Conceptual (or face) validity was demonstrated based on feedback from a TEP, a Cancer Workgroup that included representatives from each of the 11 PPS-exempt cancer hospitals, public comments, and NQF MAP review process. During each phase of measure development, these groups provided input to ensure that the measure specification had face validity (that is, identified outcomes both important to the patient and related to the quality of chemotherapy administration). In addition, empirical analyses found that the most common reasons for admission (for example, pneumonia, pain, and anemia) and ED visits (for example, pain, fever, and dehydration) aligned with the diagnoses included in the measure specification. Additional details of our validity testing are provided within the materials submitted to NQF available at: *http://www.qualityforum.org/ProjectMeasures.aspx?projectID=80703*. In summary, this measure is an important signal of high quality outpatient cancer care, measures what it intends to measure by focusing on a patient-important aspect of care—avoiding potentially unnecessary ED visits and hospital admissions, and is specified in a way to appropriately differentiate between cancer hospitals providing high and low quality care for these patients.

We will consider additional measure testing, such as additional sensitivity and specify analyses, during the annual reevaluation of the measure.

Comment: One commenter encouraged CMS to release, as part of the rulemaking process, the full measure specifications for every measure proposed, as it asserted having full specifications is critical to providers for public reporting. This commenter further expressed that hospitals not having full specifications may interpret the measures in different ways. In addition, the commenter asserted that the multiple interpretations of the measure specifications in reporting means the data reported is not comparable, and, therefore, consumers cannot make fully informed decisions based on valid and reliable data.

Response: Like this commenter, we also place great importance on transparency and clarity in measure specifications. Measure specifications for proposed measures are publicly available and provided in the proposed rules. For OP–35 in particular, measure specifications can be accessed from the CY 2017 OPPS/ASC proposed rule (81 FR 45713) and on the CMS Web site (*https://www.cms.gov/Medicare/Quality-Initiatives-Patient-Assessment-Instruments/HospitalQualityInits/Measure-Methodology.html*).

Comment: Some commenters questioned the appropriateness of the measure outcome, expressing concerns with the relationship between chemotherapy and the outcome. One commenter expressed concern that OP–35 is poorly calibrated for the intended outcome because the listed causes for admissions and ED visits for cancer patients are not exclusive sequelae of outpatient chemotherapy, which may undermine the sensitivity and specificity of this measure. Some commenters expressed concern that, because the causes for admissions and ED visits are not solely the consequence of outpatient chemotherapy, they were uncertain which behavior the measure will evaluate in reality and how the results will be interpreted to infer quality. One commenter disagreed with the assumption that limiting hospital visits to those that occur within 30 days of chemotherapy ensures that the admission is due to the management of side effects and ongoing care. This commenter expressed that a variety of clinical scenarios could occur during the 30 days after chemotherapy and lead to a hospital visit for one of the 10 specified diagnoses, with some being the result of ongoing cancer care and some being the result of other issues. In addition, some commenters expressed that some causes listed in the measure numerator are not actual diagnoses because some are symptoms (nausea and pain) without a defined cause and others are based on laboratory results (anemia).

Response: Given the increase in outpatient hospital-based chemotherapy, understanding and minimizing related unplanned admissions and ED visits is a high priority. The 10 conditions that constitute the unplanned reasons for admission or ED visit are commonly cited reasons for hospital visits among patients receiving chemotherapy in the hospital outpatient setting. These 10 conditions do include symptom diagnoses, diagnoses that require lab values, and diagnoses related to infections. Hospital visits for these 10 conditions may be due to conditions related to the cancer itself or to side effects of chemotherapy, both of which affect patients' quality of care and quality of life. Admissions and ED visits for these conditions are potentially preventable through appropriately managed outpatient care and increased communication with the patient and are a potential signal of poor quality care and poor care coordination.

We recognize that by limiting the measure to these 10 potentially preventable outcome conditions, the measure will not identify admissions and ED visits from other less common potentially preventable outcome conditions, potentially limiting the sensitivity of the measure. On the other hand, we recognize that not all admissions and ED visits for these conditions over the 30-day time frame will be preventable and some may be

[32] National Quality Forum. Guidance for Measure Testing and Evaluating Scientific Acceptability of Measure Properties. (2011).

due to other factors beyond the cancer and the chemotherapy treatment, such that the highest-performing hospital is unlikely to have a rate of 0, potentially limiting the specificity of the measure. Nevertheless, to strike the best possible balance between measure sensitivity and specificity, we limited the measure to these 10 conditions over a 30-day time period for identifying admissions and ED visits after hospital outpatient chemotherapy treatment. Existing literature suggests the vast majority of adverse events occur within that time frame, as were observed during testing.[33 34 35] The measure does not evaluate compliance with certain care processes, procedures, or behaviors, but rather evaluates overall management of patients' symptoms and complications from chemotherapy, a reflection of outpatient care quality for these patients. The results can be inferred to illustrate potential gaps in the care of these patients and promote individual hospitals to reflect internally on how to improve the care they provide, especially for hospitals with outlying performance compared to their peers. While the goal is not to reach zero admissions and ED visits, the premise is that reporting this information will promote an improvement in patient care over time for two reasons. First, transparency achieved by publicly reporting this measure will raise hospital and patient awareness of unplanned hospital visits following chemotherapy. Second, this reporting will incentivize OPDs to incorporate quality improvement activities into their chemotherapy care planning in order to improve care coordination and reduce the number of these visits. We also believe that making OPDs aware of their performance, as well as the performance that might be expected given the OPD's case-mix is helpful in supporting efforts to improve outcomes. The measure is intended to improve symptom management and care coordination for cancer patients who are undergoing chemotherapy.

Comment: Some commenters expressed concern that the measure's 30-day timeframe is misaligned with the presentation of conditions such as febrile neutropenia, a common cause of hospitalization among patients receiving chemotherapy, and further argued that the 30-day time window would not specifically address febrile neutropenia, since this condition does not correlate with any normal cycle of neutropenic nadir and recovery. One commenter believed that patients do not visit an ED for febrile neutropenia, but rather for fever and related symptoms of infection, and therefore, the cause of the visit might or might not be a complication of chemotherapy. Some commenters supported the development of a measure that addresses infection risk in cancer patients, specifically the risk of febrile neutropenia as a surrogate for infection in patients undergoing myelosuppressive chemotherapy. These commenters recommended CMS consider adopting NQF #2930 ''Febrile Neutropenia Risk Assessment Prior to Chemotherapy'' in the Hospital OQR Program.

Response: As stated above, we limited the time period for identifying the outcomes of admissions and ED visits, which are not limited only to complications of chemotherapy, to 30 days after hospital outpatient chemotherapy treatment, as existing literature suggests the vast majority of adverse events occur within that time frame,[36 37 38] and we observed this during measure development testing. In addition, the TEP supported this time period because: (1) It helps link patients' experiences to the facilities that provided their recent treatment while accounting for variations in duration between outpatient treatments; (2) it supports the idea that the admission is related to the management of side effects of treatment and ongoing care, as opposed to progression of the disease or other unrelated events; and (3) clinically, 30 days after each outpatient chemotherapy treatment is a reasonable time frame to observe related side effects.

During measure development, our TEP recommended expanding the original list of conditions that constitute the unplanned reasons for admission or ED visit, which included neutropenic fever, to include both neutropenia and fever separately to avoid missing any diagnoses of neutropenic fever since diagnosis of neutropenia requires lab results, and a single code for neutropenic fever does not exist in ICD–9 or ICD–10. We agreed that it was reasonable to expand the outcome to include fever and neutropenia to capture all potentially qualifying diagnoses. Neutropenic fever (and therefore fever and neutropenia as separate conditions) can occur at any time in the 30 days post-chemotherapy, but it is more likely to occur later on within the 30-day window, rather than directly after chemotherapy infusion.[39] Specifically, neutropenia often occurs between 7 and 12 days after chemotherapy, but much depends based on individual patient characteristics and the type of chemotherapy.[40] While the time course for when neutropenic fever is expected to occur after chemotherapy may not perfectly align with the current 30-day ascertainment period, we determined that a standardized approach, utilizing the same 30-day outcome timeframe for all of the 10 outcome conditions, would ease measure calculation, usability, and interpretation.

We thank the commenter for the suggestion to develop a measure that addresses infection risk in cancer patients, and specifically to include NQF #2930 ''Febrile Neutropenia Risk Assessment Prior to Chemotherapy'' in the Hospital OQR Program. We will consider these suggestions in the future.

Comment: One commenter recommended that CMS clearly define which chemotherapies should be included in OP–35 because there are various treatment options such as IV cytotoxic drugs, oral molecularly targeted agents, and biological therapy. The commenter recommended CMS specify whether it is exclusively examining Medicare Part A and B claims data from existing administrative reporting practices or if this measure

[33] Aprile, G., F.E. Pisa, A. Follador, L. Foltran, F. De Pauli, M. Mazzer, S. Lutrino, C.S. Sacco, M. Mansutti, and G. Fasola. ''Unplanned Presentations of Cancer Outpatients: A Retrospective Cohort Study.'' Supportive Care in Cancer, vol. 21, no. 2, 2013, pp. 397–404.

[34] Foltran, L., G. Aprile, F.E. Pisa, P. Ermacora, N. Pella, E. Iaiza, E. Poletto, SE. Lutrino, M. Mazzer, M. Giovannoni, G.G. Cardellino, F. Puglisi, and G. Fasola. ''Risk of Unplanned Visits for Colorectal Cancer Outpatients Receiving Chemotherapy: A Case-Crossover Study.'' Supportive Care in Cancer, vol. 22, no. 9, 2014, pp. 2527–2533.

[35] McKenzie, H., L. Hayes, K. White, K. Cox, J. Fethney, M. Boughton, and J. Dunn. ''Chemotherapy Outpatients' Unplanned Presentations to Hospital: A Retrospective Study.'' Supportive Care in Cancer, vol. 19, no. 7, 2011, pp. 963–969.

[36] Aprile, G., F.E. Pisa, A. Follador, L. Foltran, F. De Pauli, M. Mazzer, S. Lutrino, C.S. Sacco, M. Mansutti, and G. Fasola. ''Unplanned Presentations of Cancer Outpatients: A Retrospective Cohort Study.'' *Supportive Care in Cancer,* Vol. 21, No. 2, 2013, pp. 397–404.

[37] Foltran, L., G. Aprile, F.E. Pisa, P. Ermacora, N. Pella, E. Iaiza, E. Poletto, SE. Lutrino, M. Mazzer, M. Giovannoni, G.G. Cardellino, F. Puglisi, and G. Fasola. ''Risk of Unplanned Visits for Colorectal Cancer Outpatients Receiving Chemotherapy: A Case-Crossover Study.'' *Supportive Care in Cancer,* Vol. 22, No. 9, 2014, pp. 2527–2533.

[38] McKenzie, H., L. Hayes, K. White, K. Cox, J. Fethney, M. Boughton, and J. Dunn. ''Chemotherapy Outpatients' Unplanned Presentations to Hospital: A Retrospective Study.'' *Supportive Care in Cancer,* Vol. 19, No. 7, 2011, pp. 963–969.

[39] *http://www.cdc.gov/cancer/preventinfections/pdf/neutropenia.pdf*; *http://www.ncbi.nlm.nih.gov/pmc/articles/PMC2752227/*.

[40] *http://www.cdc.gov/cancer/preventinfections/pdf/neutropenia.pdf*.

requires any additional reporting from providers.

Response: This measure focuses on patients receiving infusion-based chemotherapy administered in a hospital outpatient department based on claims identified using Medicare Part A and B files such as ICD–9 procedure codes V58.11 (Encounter for antineoplastic chemotherapy) and 99.25 (Injection or infusion of cancer chemotherapeutic substance). We refer readers to the measure specifications, as we did in the CY 2017 OPPS/ASC proposed rule (81 FR 45722), with the code sets defining chemotherapy, available at: *https://www.cms.gov/Medicare/Quality-Initiatives-Patient-Assessment-Instruments/HospitalQualityInits/Measure-Methodology.html*. Because this is a claims-based measure, it does not require any additional reporting from providers. Using claims data allows for consistent identification of chemotherapy administration in hospital OPDs and aligns with the NQF voluntary consensus standards [41] and CMS standards for claims-based models for publicly reported measures.[42]

Comment: One commenter requested that CMS exclude all planned inpatient admissions from the outcome to ensure that hospitals are held accountable only for those admissions that are unplanned. The commenter asserted that this modification would ensure alignment with readmission measures in the inpatient setting, which exclude planned readmissions. Another commenter recommended that CMS adjust OP–35 for those ED visits and hospitalizations which may be necessary, to avoid creating patient safety or value issues. This commenter asserted that a measure looking at the medical history of admitted patients to see whether they had received appropriate prophylactic measures to prevent toxicity and to assess the appropriateness of hospitalization or ED visits would be more meaningful than a simple count of ED visits and hospitalizations.

Response: We do not agree that it is necessary to exclude all planned inpatient admissions from the outcome to ensure that hospitals are held accountable only for those admissions that are unplanned, because the outcome is defined by 10 specific reasons for the ED visit or admission, none of which are ''elective'' reasons for admissions and therefore, all can be considered unplanned. OP–35 is an outcome measure reporting the risk-adjusted rate of potentially preventable admissions and ED visits for cancer patients receiving outpatient chemotherapy. The measure does not assess the clinical processes that are part of the pathway to providing high-quality care for patients receiving outpatient chemotherapy (for example, whether the patient had access to primary care or whether the patient was prescribed appropriate pain medications); the measure assesses the outcomes based on the care provided. We recognize the value of process measures to support the outcome measure and reinforce certain aspects of high quality outpatient care, and we may consider process measures focused on the clinical care of cancer patients in future development. Furthermore, we use a specific set of codes to identify admissions and ED visits for 10 potentially preventable symptoms—anemia, dehydration, diarrhea, emesis, fever, nausea, neutropenia, pain, pneumonia, or sepsis—none of which are ''elective'' admissions and therefore, can be considered unplanned.

We do not agree that this measure needs to adjust for ED visits and admissions that may be necessary. As stated above, we do not view these outcomes as planned outcomes. We also do not think that measuring these potentially avoidable outcomes will result in hospitals making the clinical decisions that are not in the best interest of patient or put the patient care at risk. As stated previously, the goal is not to reach zero admissions and ED visits; the purpose is to identify those hospitals whose performance is worse than average, identifying areas for improvement. We will take into consideration for future rulemaking commenter's suggestion to adopt measures that evaluate the medical history of admitted patients to see whether they had received appropriate prophylactic measures to prevent toxicity and to assess the appropriateness of hospitalization or ED visits.

Comment: Some commenters requested CMS consider additional denominator exclusions for the OP–35 measure. Two commenters expressed concerns about the measure's inclusion of patients with hematologic malignancies other than leukemia, such as lymphoma and multiple myeloma in the measure cohort. The commenters suggested that these patients are at an increased risk for many of these complications, compared to patients with solid tumors, and as a result, alternative measurement approaches may be more appropriate for these patients. Some commenters stated that OP–35 should exclude patients receiving chemotherapy for a condition/disease other than cancer, but who have a diagnosis of cancer as a result of having a history of cancer. These commenters urged CMS to ensure that the measure does not inappropriately include patients who are receiving chemotherapy and do not have a current cancer diagnosis, as such patients would be a clinically different population than patients with a current cancer diagnosis who are receiving chemotherapy. Commenters also expressed concerns that patients should only be included in the measure for a particular hospital if they have received at least two outpatient chemotherapy visits at that hospital to ensure that hospitals are only held accountable for patients for whom they are the primary provider of services.

Response: We specified the measure to be as inclusive as possible; we excluded, based on clinical input and rationale, only those patient groups for which hospital visits were not typically a quality signal or for which risk adjustment would not be adequate. For example, the measure excludes patients with leukemia because, given the high toxicity of treatment and recurrence of disease, admissions among this population do not reflect poorly managed outpatient care. Patients with leukemia have a high expected admission rate due to frequent relapse, which is not the type of admission the measure intends to capture. Feedback from early public input during measure development suggested that the exclusion of all patients with a hematologic malignancy would be too broad. Based on this feedback, we analyzed data which showed that patients with lymphoma and multiple myeloma experienced similar rates of ED visits and admissions for these potentially preventable hospitalizations when compared with patients with other cancer types. Therefore, we disagree that patients with hematologic malignancies other than leukemia, such as lymphoma and multiple myeloma, have an increased risk for many of these complications, compared to patients with solid tumors. For more information on our analysis we refer readers to: *https://www.cms.gov/Medicare/Quality-Initiatives-Patient-Assessment-*

[41] National Quality Forum. National voluntary consensus standards for patient outcomes, first report for phases 1 and 2: a consensus report. *http://www.qualityforum.org/projects/Patient_Outcome_Measures_Phases1-;2.aspx*. Accessed August 19, 2010.

[42] Centers for Medicare & Medicaid Services (CMS). CMS Measures Management System. *https://www.cms.gov/Medicare/Quality-Initiatives-Patient-Assessment-Instruments/MMS/MeasuresManagementSystemBlueprint.html*. Accessed January 2016.

Instruments/HospitalQualityInits/Measure-Methodology.html. Therefore, we excluded patients with leukemia, but not other hematologic malignancies. However, as part of continued measure evaluation, we will consider reviewing rates stratified by cancer type to track the impact and inform future measure revisions.

Comment: Some commenters stated that OP–35 should exclude patients receiving chemotherapy for a condition/disease other than cancer, but who have a diagnosis of cancer as a result of having a history of cancer. These commenters urged CMS to ensure that the measure does not inappropriately include patients who are receiving chemotherapy and do not have a current cancer diagnosis, as such patients would be a clinically different population than patients with a current cancer diagnosis who are receiving chemotherapy.

Response: This measure is intended to assess the care provided to cancer patients receiving chemotherapy in the OPD. To be included in the cohort, a patient must have a diagnosis of cancer on a Medicare FFS claim during the performance period; we do not include codes for ''history of cancer'' in our code set to define cancer diagnosis. We refer readers to the measure specifications for more details about the cohort: *https://www.cms.gov/Medicare/Quality-Initiatives-Patient-Assessment-Instruments/HospitalQualityInits/Measure-Methodology.html*. By limiting the cohort to those with a diagnosis of cancer on a Medicare FFS claim, the measure would only include patients currently receiving chemotherapy as part of active cancer care management, and therefore, exclude patients who are receiving chemotherapy but without a current cancer diagnosis, likely a very small number of patients. However, we will continue to monitor the cohort for any future necessary measure updates.

Comment: Commenters expressed concerns that patients should only be included in the measure for a particular hospital if they have received at least two outpatient chemotherapy visits at that hospital to ensure that hospitals are only held accountable for patients for whom they are the primary provider of services.

Response: We disagree. Excluding patients who only receive one chemotherapy treatment at a facility during the performance period may unnecessarily exclude qualifying patients. Furthermore, we believe that if an OPD provides even a single chemotherapy treatment to the cancer patient, that OPD is still expected to provide appropriate care planning, treatment, and follow-up over the subsequent 30 days. In addition, our data show that nearly 95 percent of the patients who receive chemotherapy treatment in an OPD receive treatment at the same facility throughout the course of treatment.

After consideration of the public comments we received, we are finalizing the adoption of the OP–35: Admissions and Emergency Department (ED) Visits for Patients Receiving Outpatient Chemotherapy measure for the CY 2020 payment determination and subsequent years as proposed.

b. OP–36: Hospital Visits After Hospital Outpatient Surgery Measure (NQF #2687)

(1) Background

Outpatient same-day surgery is common in the United States. Nearly 70 percent of all surgeries in the United States are now performed in the outpatient setting, with most performed as same-day surgeries at hospitals.[43] Same-day surgery offers significant patient benefits as compared with inpatient surgery, including shorter waiting times, avoidance of hospitalizations, and rapid return home.[44] Furthermore, same-day surgery costs significantly less than an equivalent inpatient surgery, and therefore, presents a significant cost saving opportunity to the health system.[45] With the ongoing shift towards outpatient surgery, assessing the quality of surgical care provided by hospitals has become increasingly important. While most outpatient surgery is safe, there are well-described and potentially preventable adverse events that occur after outpatient surgery, such as uncontrolled pain, urinary retention, infection, bleeding, and venous thromboembolism, which can result in unanticipated hospital visits. Similarly, direct admissions after surgery that are primarily caused by nonclinical patient considerations (such as lack of transport home upon discharge) or facility logistical issues (such as delayed start of surgery) are common causes of unanticipated yet preventable hospital admissions following same-day surgery. Hospital utilization following same-day surgery is an important and accepted patient-centered outcome reported in the literature. National estimates of hospital visit rates following surgery vary from 0.5 to 9.0 percent based on the type of surgery, outcome measured (admissions alone or admissions and ED visits), and timeframe for measurement after surgery.[46 47 48 49 50 51 52 53] Furthermore, hospital visit rates vary among hospitals,[54] suggesting variation in surgical and discharge care quality. However, providers (hospitals and surgeons) are often unaware of their patients' hospital visits after surgery because patients often present to the ED or to different hospitals.[55] This risk-standardized measure would provide the opportunity for providers to improve the quality of care and to lower the rate of preventable adverse events that occur after outpatient surgery.

(2) Overview of Measure

We believe it is important to reduce adverse patient outcomes associated with preparation for surgery, the procedure itself, and follow-up care. Therefore, in the CY 2017 OPPS/ASC proposed rule (81 FR 45714 through 45716), we proposed to include OP–36: Hospital Visits after Hospital Outpatient Surgery in the Hospital OQR Program

[43] Cullen KA, Hall MJ, Golosinskiy A. Ambulatory surgery in the United States, 2006. National health statistics reports. Jan 28 2009(11):1–25.

[44] International Association for Ambulatory Surgery. Day Surgery: Development and Practice. International Association for Ambulatory Surgery (IASS); 2006. Available at: *http://www.iaas-med.com/files/historical/DaySurgery.pdf.*

[45] Majholm B, Engbaek J, Bartholdy J, et al. Is day surgery safe? A Danish multicentre study of morbidity after 57,709 day surgery procedures. Acta anaesthesiologica Scandinavica. Mar 2012;56(3):323–331.

[46] Ibid.

[47] Linares-Gil MJ, Pelegri-Isanta MD, Pi-Siqués F, Amat-Rafols S, Esteva-Ollé MT, Gomar C. Unanticipated admissions following ambulatory surgery. *Ambulatory Surgery.* 1997;5(4):183–188.

[48] Fleisher LA, Pasternak LR, Herbert R, Anderson GF. Inpatient hospital admission and death after outpatient surgery in elderly patients: importance of patient and system characteristics and location of care. Archives of surgery (Chicago, Ill.: 1960). Jan 2004;139(1):67–72.

[49] Coley KC, Williams BA, DaPos SV, Chen C, Smith RB. Retrospective evaluation of unanticipated admissions and readmissions after same day surgery and associated costs. *Journal of Clinical Anesthesia.* Aug 2002;14(5):349–353.

[50] Hollingsworth JM, Saigal CS, Lai JC, Dunn RL, Strope SA, Hollenbeck BK. Surgical quality among Medicare beneficiaries undergoing outpatient urological surgery. *The Journal of Urology.* Oct 2012;188(4):1274–1278.

[51] Bain J, Kelly H, Snadden D, Staines H. Day surgery in Scotland: patient satisfaction and outcomes. Quality in health care: QHC. Jun 1999;8(2):86–91.

[52] Fortier J, Chung F, Su J. Unanticipated admission after ambulatory surgery—a prospective study. Canadian journal of anaesthesia = *Journal Canadien d'Anesthesie.* Jul 1998;45(7):612–619.

[53] Aldwinckle RJ, Montgomery JE. Unplanned admission rates and postdischarge complications in patients over the age of 70 following day case surgery. *Anaesthesia.* Jan 2004;59(1):57–59.

[54] Bain J, Kelly H, Snadden D, Staines H. Day surgery in Scotland: patient satisfaction and outcomes. Quality in health care: QHC. Jun 1999;8(2):86–91.

[55] Mezei G, Chung F. Return hospital visits and hospital readmissions after ambulatory surgery. Annals of surgery. Nov 1999;230(5):721–727.

for the CY 2020 payment determination and subsequent years.

We expect that the measure would promote improvement in patient care over time because measuring this area, coupled with transparency in publicly reporting scores, will make patient unplanned hospital visits (ED visits, observation stays, or unplanned inpatient admissions) after surgery more visible to providers and patients and encourage providers to engage in quality improvement activities in order to reduce these visits. This measure meets the National Quality Strategy priority of ''promoting effective communication and coordination of care.'' Many providers are unaware of the post-surgical hospital visits that occur because patients often present to the ED or to different hospitals. Reporting this outcome will illuminate problems that may not currently be visible. In addition, the outcome of unplanned hospital visits is a broad, patient-centered outcome that reflects the full range of reasons leading to hospitalization among patients undergoing same-day surgery. This risk-standardized quality measure would address this information gap and promote quality improvement by providing feedback to facilities and physicians, as well as transparency for patients on the rates and variation across facilities in unplanned hospital visits after outpatient same-day surgery.

Currently, there are no publicly available quality of care reports for providers or facilities that conduct same-day surgery in the hospital outpatient setting. Thus, this measure addresses an important quality measurement gap, and there is an opportunity to enhance the information available to patients choosing among hospitals that provide same-day outpatient surgery. Furthermore, providing outcome rates to hospitals will make visible to clinicians, meaningful quality differences and incentivize improvement.

This measure (MUC ID: 15–982) was included on a publicly available document titled ''MAP 2016 Considerations for Implementing Measures in Federal Programs: Hospitals'' on the NQF Web site at: *http://www.qualityforum.org/WorkArea/linkit.aspx?LinkIdentifier=id&ItemID=81688* (formerly referred to as the ''list of Measures Under Consideration'') in compliance with section 1890A(a)(2) of the Act.

The measure received NQF endorsement on September 3, 2015.[56] In addition, the MAP supported the measure for program use citing the vital importance of measures that help facilities reduce unnecessary hospital visits.[57] Some members cautioned that because the measure was endorsed by NQF before the start of the SDS trial period, the measure should be reexamined during maintenance to determine whether SDS adjustments are needed.[58]

We believe that this proposed measure reflects consensus among the affected parties because the measure was subject to public comment during the MAP and measure development processes, with public commenters agreeing with the MAP's conclusions on the measure.[59] As stated above, this measure also was endorsed by the NQF.

We understand the important role that SDS plays in the care of patients. However, we continue to have concerns about holding hospitals to different standards for the outcomes of their patients of diverse SDS because we do not want to mask potential disparities or minimize incentives to improve the outcomes of disadvantaged populations. For all our measures, we routinely monitor the impact of SDS on hospitals' results. We will continue to investigate methods to ensure all hospitals are treated as fairly as possible within the program.

The NQF is currently undertaking a 2-year trial period in which new measures and measures undergoing maintenance review will be assessed to determine if risk-adjusting for sociodemographic factors is appropriate. This trial entails temporarily allowing inclusion of sociodemographic factors in the risk-adjustment approach for some performance measures. At the conclusion of the trial, NQF will issue recommendations on future permanent inclusion of sociodemographic factors. During the trial, measure developers are expected to submit information such as analyses and interpretations as well as performance scores with and without sociodemographic factors in the risk adjustment model.

Furthermore, the Office of the Assistant Secretary for Planning and Evaluation (ASPE) is conducting research to examine the impact of SDS on quality measures, resource use, and other measures under the Medicare program as directed by the IMPACT Act. We will closely examine the findings of the ASPE reports and consider how they apply to our quality programs in future rulemaking, as appropriate and feasible. We look forward to working with stakeholders in this process.

(3) Data Sources

The proposed OP–36: Hospital Visits after Hospital Outpatient Surgery measure is a claims-based measure. It uses Part A and Part B Medicare administrative claims data from Medicare FFS beneficiaries with outpatient same-day surgery. The performance period for the measure is 1 year (that is, the measure calculation includes eligible outpatient same-day surgeries occurring within a one-year timeframe). For example, for the FY 2020 payment determination, the performance period would be CY 2018 (that is, January 1, 2018 through December 31, 2018).

(4) Measure Calculation

The measure outcome is any of the following hospital visits: (1) An inpatient admission directly after the surgery; or (2) an unplanned hospital visit (ED visits, observation stays, or unplanned inpatient admissions) occurring after discharge and within 7 days of the surgery. If more than one unplanned hospital visit occurs, only the first hospital visit within the outcome timeframe is counted in the outcome.

The facility-level measure score is a ratio of the predicted to expected number of post-surgical hospital visits among the hospital's patients. The numerator of the ratio is the number of hospital visits predicted for the hospital's patients accounting for its observed rate, the number of surgeries performed at the hospital, the case-mix, and the surgical procedure mix. The denominator of the ratio is the expected number of hospital visits given the hospital's case-mix and surgical procedure mix. A ratio of less than one indicates the hospital's patients were estimated as having fewer post-surgical visits than expected compared to hospitals with similar surgical procedures and patients; and a ratio of greater than one indicates the hospital's patients were estimated as having more visits than expected.

In order to ensure the accuracy of the algorithm for attributing claims data and the comprehensive capture of hospital surgeries potentially affected by the CMS 3-day payment window policy, we

[56] MAP 2016 Considerations for Implementing Measures in Federal Programs: Hospitals. Final Report. February 15, 2016. Available at: *http://www.qualityforum.org/WorkArea/linkit.aspx?LinkIdentifier=id&ItemID=81688.*

[57] Spreadsheet of MAP 2016 Final Recommendations. February 1, 2016. Available at: *http://www.qualityforum.org/WorkArea/linkit.aspx?LinkIdentifier=id&ItemID=81593.*

[58] Ibid.

[59] MAP 2016 Considerations for Implementing Measures in Federal Programs: Hospitals. Final Report. February 15, 2016. Available at: *http://www.qualityforum.org/WorkArea/linkit.aspx?LinkIdentifier=id&ItemID=81688.*

identified physician claims for same-day surgeries in the hospital setting from the Medicare Part B Standard Analytical Files (SAF) with an inpatient admission within 3 days and lacking a corresponding hospital facility claim. We then attribute the surgery identified as affected by this policy to the appropriate hospital facility using the facility provider identification from the inpatient claim.

For additional methodology details, we refer readers to the documents posted at: *http://www.cms.gov/Medicare/QualityInitiatives-Patient-AssessmentInstruments/HospitalQualityInits/Measure-Methodology.html* under ''Hospital Outpatient Surgery.''

(5) Cohort

The measure includes Medicare FFS patients aged 65 years and older undergoing same-day surgery (except eye surgeries) in hospitals.

''Same-day surgeries'' are substantive surgeries and procedures listed on Medicare's list of covered ASC procedures. Medicare developed this list to identify surgeries that can be safely performed as same-day surgeries and do not typically require an overnight stay. Surgeries on the ASC list of covered procedures do not involve or require major or prolonged invasion of body cavities, extensive blood loss, major blood vessels, or care that is either emergent or life-threatening.

Although Medicare developed this list of surgeries for ASCs, we use it for this hospital outpatient measure for two reasons. First, it aligns with our target cohort of surgeries that have a low to moderate risk profile and are safe to be performed as same-day surgeries. By only including surgeries on this list in the measure, we effectively do not include surgeries performed at hospitals that typically require an overnight stay which are more complex, higher risk surgeries. Second, we use this list of surgeries because it is annually reviewed and updated by Medicare, and includes a transparent public comment submission and review process for addition and/or removal of procedures codes. The list for 2016 is posted at: *https://www.cms.gov/Medicare/Medicare-Fee-for-Service-Payment/ASCPayment/ASC-Regulations-and-Notices-Items/CMS-1633-FC.html?DLPage=1&DLEntries=10&DLSort=2&DLSortDir=descending* (we refer readers to Addendum AA to this final rule with comment period, which is available via the Internet on the CMS Web site).

The measure cohort excludes eye surgeries. Although eye surgery is considered a substantive surgery, its risk profile is more representative of ''minor'' surgery, in that it is characterized by high volume and a low outcome ratio. The measure cohort also excludes procedures for patients who lack continuous enrollment in Medicare FFS Parts A and B in the 7 days after the procedure to ensure all patients have complete data available for outcome assessment.

(6) Risk Adjustment

The statistical risk-adjustment model includes 25 clinically relevant risk-adjustment variables that are strongly associated with risk of hospital visits within 7 days following outpatient surgery. The measure risk adjusts for surgical procedure complexity using two variables. First, it adjusts for surgical procedure complexity using the Work Relative Value Units (RVUs).[60] Work RVUs are assigned to each CPT procedure code and approximate procedure complexity by incorporating elements of physician time and effort. Second, it classifies each surgery into an anatomical body system group using the Agency for Healthcare Research and Quality (AHRQ) Clinical Classification System (CCS),[61] to account for organ-specific differences in risk and complications, which are not adequately captured by the Work RVU alone.

We invited public comment on our proposal to adopt the OP–36: Hospital Visits after Hospital Outpatient Surgery measure (NQF #2687) to the Hospital OQR Program for the CY 2020 payment determination and subsequent years as discussed above.

Comment: One commenter supported the proposed adoption of the OP–36: Adoption of Hospital Visits After Hospital Outpatient Surgery measure because it provides the opportunity for providers to improve their quality of care and lower the rate of preventable adverse events that occur after outpatient surgery.

Response: We thank the commenter for its support.

Comment: Many commenters recommended that OP–36 be reviewed by the NQF's SDS trial to determine whether there is a conceptual and empirical relationship between the measure's outcomes and SDS factors before it is publicly reported. Furthermore, commenters believed that OP–36 should be reviewed to determine if additional SDS risk adjustment are necessary. Some commenters were concerned that the measure may be heavily influenced by factors outside of the hospital's direct control. Many commenters specifically expressed concern that hospitals that serve a significant volume of patients in lower socioeconomic areas which may lack adequate infrastructure for appropriate follow-up care may be unfairly penalized as a result of this measure. Without the use of appropriate risk adjustment for this measure, many commenters asserted the clinical outcomes could be less reliable due to SDS confounding variables. In addition, many commenters expressed concern that patients with low SDS may have fewer options for managing their care and therefore may require additional hospital visits compared to patients with more resources. One commenter expressed concern that patient populations who do not have family or home care aides or ready access to pharmacies for medications may be more likely to return to the ED compared to patients with these benefits.

Response: We understand the important role that factors outside of the hospitals' direct control, for example socioeconomic and sociodemographic status, play in the care of patients. Patients with low SDS may have fewer options for managing their care and therefore, may require additional hospital visits compared to patients with more resources. In addition, patient populations that do not have family or home care aides, or ready access to pharmacies for medications, may be more likely to return to the ED compared to patients with these benefits, as commenter mentions. We routinely monitor the impact of sociodemographic status on hospitals' results. However, we do not believe that hospitals would necessarily be unfairly penalized as a result of this measure for reasons discussed below.

As stated previously, the Office of the Assistant Secretary for Planning and Evaluation (ASPE) is conducting research to examine the impact of sociodemographic status on quality measures, resource use, and other measures under the Medicare program as directed by the IMPACT Act. We will closely examine the findings of the ASPE reports and consider how they apply to our quality programs in future rulemaking, as appropriate and feasible. We look forward to working with stakeholders in this process.

[60] S. Coberly. The Basics; Relative Value Units (RVUs). National Health Policy Forum. January 12, 2015. Available at: *http://www.nhpf.org/library/the-basics/Basics_RVUs_01-12-15.pdf.*

[61] HCUP Clinical Classifications Software for Services and Procedures. Healthcare Cost and Utilization Project (HCUP). 2008. Agency for Healthcare Research and Quality, Rockville, MD. Available at: *https://www.hcup-us.ahrq.gov/toolssoftware/ccs_svcsproc/ccssvcproc.jsp.*

We also note that the NQF is currently undertaking a 2-year trial period in which new measures and measures undergoing maintenance review will be assessed to determine if risk adjusting for sociodemographic factors is appropriate. This trial entails temporarily allowing inclusion of sociodemographic factors in the risk-adjustment approach for some performance measures. At the conclusion of the trial, NQF will issue recommendations on future permanent inclusion of SDS factors. During the trial, measure developers are expected to submit information such as analyses and interpretations as well as performance scores with and without SDS factors in the risk-adjustment model. We intend to continue engaging in the NQF process as we consider the appropriateness of adjusting for sociodemographic factors in our outpatient quality reporting program measures.

This NQF trial period went into effect April 15, 2015,[62] meaning that projects with measure submission deadlines beforehand fell under NQF's previous policy on SDS adjustment,[63] while projects with measure submission deadlines after that date are subject to the NQF trial. Because the 2015 NQF Surgery Project's measure submission deadline was January 14, 2015, both the developer and the Surgery Standing Committee conformed to the pre-trial policy regarding inclusion of SDS factors in the risk-adjustment approach.[64] Thus, OP–36 was not part of NQF's SDS trial. At this time, we do not plan to resubmit the measure to be part of the SDS trial because the measure was already reviewed and endorsed by the NQF. We will further evaluate the role of SDS when the measure is under comprehensive reevaluation.

Consistent with the pre-trial NQF SDS guidance, we evaluated the potential effects of risk adjusting for two SDS indicators—Medicaid-dual eligibility and race. These variables are available in the CMS claims data and use of Medicaid eligibility status as a proxy for SDS is consistent with prior research as well as NQF recommendations.[65] Our results show that adjusting for these two factors at the patient level does little to change the measure scores. Unadjusted and adjusted OPD risk-standardized hospital visit (RSHV) ratios are highly correlated—Pearson correlation of 0.990 and 0.998 for adjustment for Medicaid-dual eligibility and race, respectively.[66] This suggests that including a patient-level risk adjuster for SDS will result in minimal difference in measure results after accounting for other factors already adjusted for in the model, such as age, comorbidities, and the complexity of the surgery. Thus, we are finalizing the measure as currently specified because the inclusion of SDS-related variables in the risk-adjustment model did not substantially affect measure results.

In addition, we continue to have concerns about holding hospitals to different standards for the outcomes of their patients of diverse SDS because we do not want to mask potential disparities or minimize incentives to improve the outcomes of disadvantaged populations.

In addition, we examined the distribution of measure scores by quartiles of both the percentage of dual-eligible patients and the percentage of African American patients in order to explore whether there might be differences in OPD RSHV ratios by the proportion of such patients treated at the facility. A ratio of less than one indicates the OPD's patients were estimated as having fewer post-surgical visits than expected compared to OPDs with similar surgical procedures and patients, and a ratio of greater than one indicates the OPD's patients were estimated as having more visits than expected. We do not expect the rate of hospital visits to be zero. Overall, our results showed a range of measure scores across quartiles of dual-eligible patients and of African American patients. The median RSHV ratio for all quartiles was <1 (indicating better than expected performance), demonstrating that, even among facilities with the highest proportion of dual-eligible and African American patients, many OPDs can and do perform well on the measure. Furthermore, even though the distribution of measure scores was shifted slightly higher in facilities with the highest proportion of such patients, the distributions for all quartiles are largely overlapping. Together, these two points suggest that hospitals that serve a significant volume of patients in lower socioeconomic areas that lack adequate infrastructure for appropriate follow-up care would not be unfairly penalized as a result of this measure. From these analyses, it is not clear what is causing the observed differences across hospitals with the highest and lowest proportions of dual-eligible and African American patients. One potential cause could be differences related to quality, and, as discussed above, we are particularly concerned about masking quality differences through SDS adjustments. Given these findings, we did not adjust the measure for SDS at this time. We believe that doing so will not appreciably change the measure scores and might contribute to masking disparities in care. However, as noted above, we will continue to assess the appropriateness of including SDS factors in risk adjustment to assess the reliability of the measure.

Reducing adverse outcomes is the joint responsibility of hospitals and other clinicians. Measuring hospital visits will create incentives to invest in interventions to improve outpatient care and improved transitions to post-procedure care. We recognize that the facility's performance might be affected by factors outside of the facility. However, all facilities have the opportunity to reduce the rate of hospital visits following surgeries. Because of the measure's intent to illuminate variation in quality of care across OPDs for same-day surgeries, inform patient choice, and drive quality improvement, we do not believe we should delay public reporting pending further analysis of the empirical relationship between the measure's outcomes and SDS factors.

Comment: A few commenters expressed concerns that this measure does not provide clear signals of quality or will create disincentives for seeking care in the ED when appropriate. Two commenters asserted that the measure combines admissions, observation stays and ED visits; each reflecting widely different approaches to patient-centered care and that it may not be reasonable to combine these types of hospital visits. Another commenter urged CMS to remove the ED visits and observation stays from the measure to focus only on inpatient admissions. One commenter asserted that the ''expected number of post-surgical hospital visits'' calculation will not provide sufficient assurance, particularly given issues related to risk-adjustment, that the current structure of the measure will avoid creating a disincentive for seeking appropriate

[62] National Quality Forum. Socioeconomic Status (SES) Trial period. Available at: *http://www.qualityforum.org/ProjectDescription.aspx?projectID=80124*.

[63] Under the previous policy, only clinical factors could be included in a measure's risk adjustment model.

[64] Email from Andrew Lyzenga at NQF, June 15, 2015.

[65] National Quality Forum. Patient Outcome Measures Phases 1 and 2. Available at: *http://www.qualityforum.org/projects/Patient_Outcome_Measures_Phases1-2.aspx*.

[66] Yale New Haven Health Services Corporation—Center for Outcomes Research and Evaluation. 2016 Measure Updates and Specifications Report: Hospital Visits after Hospital Outpatient Surgery Measure. June 2016. Available at: *https://www.cms.gov/Medicare/Quality-Initiatives-Patient-Assessment-Instruments/HospitalQualityInits/Downloads/Hospital-Visits-after-Hospital-Outpatient-Surgery-Measure.pdf*.

care in the emergency department. The commenter further asserted it will be methodologically difficult to come up with that expected number of visits, and further expressed that applying a measure such as this for patient-initiated services is a misstep in policy. One commenter advised CMS to monitor the use of the measure.

Response: We believe that patients with emergent medical needs will continue to seek care in an ED as needed. Providers should not have an incentive to discourage patients from seeking appropriate care for a medical problem that they feel needs to be addressed immediately since the goal of the measure is not to reach zero ED visits and the measure is risk adjusted so facilities with generally higher-risk patients will not be disadvantaged in the measure. In addition, it is not expected that patients undergoing same-day surgery would need to be placed in observation status after the procedure. We have designed the measure to capture all unplanned hospital visits that may be a signal of poor quality of care, and thereby encourage hospitals to minimize risk and the need for follow-up hospital services.

We disagree that combining admissions, observation stays and ED visits reflects widely different approaches to patient-centered care and that we should remove the ED visits and observation stays from the measure to focus only on inpatient admissions. We included ED visits and observation stays for a variety of reasons. First, hospital visits are a broad outcome that captures the full range of potentially serious adverse events related to preparing for, undergoing, and recovering from the surgery. Second, hospital visits are easily identifiable and measurable from claims data. Third, this broad outcome is consistent with a patient-centered view of care that prompts providers to fully account for and minimize to the fullest extent all acute complications, such as uncontrolled pain or urinary retention, not just those narrowly related to procedural technique. Finally, hospital visits are costly; reducing hospital visits following outpatient surgery may lead to substantial healthcare savings. As one commenter suggested, we will continue to reevaluate the measure and monitor its use.

One commenter asserted that it will be methodologically difficult to come up with the expected number of visits and will result in a misstep in policy. However, the measure's risk model is informed by the literature and expert review, and is designed to capture patient risk, not risk that might be related to quality. Our approaches to risk adjustment and calculating both predicted and expected values using hierarchical generalized linear modeling are tailored to, and appropriate for, a publicly reported outcome measure as articulated in published scientific guidelines.[67] [68] [69] In addition, these analytic methods have been widely used in other risk-adjusted outcome measures developed by CMS for quality measurement and public reporting.[70] As a result, we believe that the ''expected number of post-surgical hospital visits'' calculation is sound and will provide sufficient assurance and will not be a misstep in policy.

Comment: Two commenters asserted that beneficiaries will find procedure-specific outcome measures more valuable as beneficiaries choose outpatient facilities based on, in part, services and procedures offered.

Response: We disagree that a procedure-specific outcome measure would be more valuable. A broad range of surgical procedures are performed at OPDs, and the measure as specified provides consumers with a full picture of quality at a facility. This measure complements other outpatient quality measures already adopted in the Hospital OQR Program that focus on specific types of procedures or patients, for example the Facility 7-day Risk-Standardized Hospital Visit Rate after Outpatient Colonoscopy measure. For more information on that measure, we refer readers to the CY 2015 OPPS/ASC final rule with comment period (79 FR 66948 through 66955). In addition, as part of our standard procedures, we will provide facilities with case-level information, including the surgery performed as part of confidential preview reporting to provide facilities with actionable information for quality improvement. We believe that the measure, including the preview report, will encourage hospitals to implement systems of care that will ensure quality and reduce unplanned hospitals visits in the hospital as whole.

Comment: One commenter expressed concern that the measure does not distinguish if the procedure was provided at the same hospital where the patient has the unplanned visit, making hospitals accountable for the care provided somewhere else.

Response: The measure assigns the hospital visit outcome to the facility providing the same-day outpatient surgery, not to the facility (if different) where the hospital visit took place. We refer readers to the measure specifications at: *https://www.cms.gov/Medicare/Quality-Initiatives-Patient-Assessment-Instruments/HospitalQualityInits/Downloads/Hospital-Visits-after-Hospital-Outpatient-Surgery-Measure.pdf.*

Comment: Some commenters recommended that CMS hold providers in both hospital outpatient and ASC settings accountable by either adding outpatient surgeries performed in ASCs to OP–36 or simultaneously instituting a similar measure in the ASC setting. Commenters argued that holding providers in both settings accountable would negate the possibility of inappropriate favoring of one setting over another to avoid the negative consequence of an inpatient admission. Two commenters argued that the availability of data on complications from outpatient hospital surgeries without the corresponding data in ASC settings will negatively affect the reputation of hospitals.

Response: We thank the commenters for their suggestion to hold providers in both hospital outpatient and ASC settings accountable. We did not and do not intend to add outpatient surgeries performed in ASCs to OP–36, because ASCs are a diverse group of facilities that often specialize in very specific subspecialties and procedures, while OPDs often perform all types of surgeries across many subspecialties. Therefore, comparing ASCs to OPDs would not be fair as ASCs specializing only in orthopedic procedures, for example, may have substantially lower rates due to the nature of the procedures they perform, compared to an OPD that performs procedures across all subspecialties.

We agree that holding both hospital outpatient and ASC settings accountable would negate the possibility of inappropriate favoring of one setting over another to avoid the negative consequence of an inpatient admission. We also acknowledge that availability of

[67] Krumholz HM, Brindis RG, Brush JE, et al. Standards for Statistical Models Used for Public Reporting of Health Outcomes: An American Heart Association Scientific Statement From the Quality of Care and Outcomes Research Interdisciplinary Writing Group: Cosponsored by the Council on Epidemiology and Prevention and the Stroke Council Endorsed by the American College of Cardiology Foundation. Circulation. 2006; 113 (3): 456–462.

[68] Normand S–LT, Shahian DM. Statistical and Clinical Aspects of Hospital Outcomes Profiling. Stat Sci. 2007; 22 (2): 206–226.

[69] Centers for Medicare & Medicaid Services. Statistical Issues in Assessing Hospital Performance. January 27, 2012. Available at: *https://www.cms.gov/Medicare/Quality-Initiatives-Patient-Assessment-Instruments/HospitalQualityInits/Downloads/Statistical-Issues-in-Assessing-Hospital-Performance.pdf.*

[70] We refer readers to the CY 2015 OPPS/ASC final rule with comment period (79 FR 66949) for an example of a risk-adjusted outcome measure that used the hierarchical generalized linear modeling.

data on complications from outpatient hospital surgeries without the corresponding data in ASC settings might negatively affect the reputation of outpatient hospitals due to inappropriate favoring of one setting over another. To address these concerns, we are currently developing two new outcome measures that specifically assess hospital visits within 7 days following orthopedic and urology procedures performed at ASCs for the ASCQR Program. The measures went through the measure development public input period, and results are available at: *https://www.cms.gov/Medicare/Quality-Initiatives-Patient-Assessment-Instruments/MMS/CallforPublicComment.html*. To access the results scroll to the bottom of the page and select *ARCHIVED Public Comment Files between 08-18-2016 and 09-14-2016 [zip].* Once the zip file has downloaded open *Development-of-Facility-Level-Quality-Measures-of-Unplanned-Hospital-Visits-after-Selected-Ambulatory-Surgical-Center-Procedures.zip,* and select ''*TEP Summary Report for Measures of Hospital Visits after Selected ASC Procedures.pdf.*'' The measures are anticipated to undergo MAP review in December 2016. If/when these two new measures are adopted in the ASCQR Program, we believe that they will negate the possibility of inappropriate favoring of one setting over another.

Comment: One commenter expressed concerns that OP–36 does not appropriately identify planned versus unplanned readmissions. The commenter specifically noted that if, during the episode window, a planned surgery for a chronic condition resulted in the assignment of an additional acute diagnosis, the entire admission would be deemed unplanned. The commenter recommended against classifying clinically appropriate hospital admissions following outpatient surgery as low quality care.

Response: We disagree and believe that the measure appropriately identifies planned versus unplanned admissions following index procedures. We developed the algorithm that identifies planned readmissions, and applied this algorithm to the measure. We refer readers to *https://www.cms.gov/Medicare/Quality-Initiatives-Patient-Assessment-Instruments/HospitalQualityInits/Downloads/Hospital-Visits-after-Hospital-Outpatient-Surgery-Measure.pdf* for more details on this algorithm. To summarize, the algorithm uses procedure and principal discharge diagnosis codes on each hospital claim to identify admissions that are typically planned and may occur after hospital outpatient surgery. Generally, a planned admission is defined as a non-acute admission for a scheduled procedure (for example, total hip replacement or cholecystectomy). In addition, few specific and limited types of care are always considered planned (for example, major organ transplant, rehabilitation, or maintenance chemotherapy). The measure does not count planned hospital visits, or clinically appropriate visits, as an outcome because variation in planned admissions does not reflect quality differences; therefore, these visits will not signal low quality care. On the other hand, admissions for an acute illness or for complications of care, as well as all ED and observation stay hospital visits, are considered unplanned. We refer readers to the technical report for the full planned admission algorithm at: *https://www.cms.gov/Medicare/Quality-Initiatives-Patient-Assessment-Instruments/HospitalQualityInits/Downloads/Hospital-Visits-after-Hospital-Outpatient-Surgery-Measure.pdf*. We reassess this algorithm annually.

With regard to the commenter's concern that a planned admission might result in an acute discharge diagnosis—such as an infection from a planned procedure—and result in the hospital visit being counted as an outcome, the measure risk-adjusts for a wide variety of patient comorbidities, including chronic conditions that might increase the risk of a planned or unplanned hospital visit. We refer readers to *https://www.cms.gov/Medicare/Quality-Initiatives-Patient-Assessment-Instruments/HospitalQualityInits/Downloads/Hospital-Visits-after-Hospital-Outpatient-Surgery-Measure.pdf*.

In addition, we plan to conduct a dry run of this measure in 2017, and will assess feedback from hospitals including those related to the algorithm and planned admissions. Based on the feedback, we will consider adjusting the algorithm as needed for a future iteration of the measure.

Comment: One commenter expressed concerns regarding the proposed risk adjustment variables. The commenter stated the convoluted approach of adjusting for surgical procedure complexity using RVUs and the introduction of a complicated anatomical body system classification system make the risk-adjustment methodology unclear and difficult to understand. The commenter further expressed that the documentation of comorbid conditions on same-day surgery is very limited because of the nature of the service, and that it is problematic to depend upon extensive documentation in a same day surgery record to determine risk. This commenter asserted that surgeons who bring a patient in for a specific ambulatory-type procedure typically limit their documentation to conditions that are relevant to the specific body system related to the surgical procedure. Another commenter recommended CMS develop a more robust risk adjustment model with a higher c-statistic.

Response: We disagree that our approach of adjusting for surgical procedure complexity using RVUs and the introduction of a complicated anatomical body system classification system make the risk-adjustment methodology unclear and difficult to understand. Our approach to accounting for procedural complexity is well-documented in literature [71] and aligns with the established approach used for risk adjustment in the American College of Surgeons' National Surgical Quality Improvement Program (NSQIP).[72] To summarize, the measure risk adjusts for surgical procedural complexity using two variables. First, it adjusts for surgical procedural complexity using the Work RVUs of the procedure. Work RVUs are assigned to each CPT procedure code and approximate surgical procedural complexity by incorporating elements of physician time and effort. For patients with multiple concurrent CPT procedure codes, we risk adjust for the CPT code with the highest Work RVU value. Second, it classifies each surgery into an anatomical body system group using the AHRQ Clinical Classification System (CCS).[73] The measure uses the body system variable, in addition to the Work RVU of the surgery, to account for organ-specific difference in risk and complications which are not adequately captured by the Work RVU alone. We also collect all diagnoses from a patient's inpatient, outpatient, and physician claims from the year prior to identify comorbidities for adjustment (see page 14 of the technical report:

[71] Raval MV, Cohen ME, Ingraham AM, et al. Improving American College of Surgeons National Surgical Quality Improvement Program risk adjustment: Incorporation of a novel procedure risk score. Journal of the American College of Surgeons. Dec 2010;211(6):715–723.

[72] Raval MV, Cohen ME, Ingraham AM, et al. Improving American College of Surgeons National Surgical Quality Improvement Program risk adjustment: Incorporation of a novel procedure risk score. Journal of the American College of Surgeons. Dec 2010;211(6):715–723.

[73] Healthcare Cost and Utilization Project. Clinical Classifications Software (CCS) for Services and Procedures. Last Modified: February 3, 2016. Available at: *https://www.hcup-us.ahrq.gov/toolssoftware/ccs_svcsproc/ccssvcproc.jsp*.

https://www.cms.gov/Medicare/Quality-Initiatives-Patient-Assessment-Instruments/HospitalQualityInits/Downloads/Hospital-Visits-after-Hospital-Outpatient-Surgery-Measure.pdf). Therefore, that any potential limitation of the comorbidities listed on the say-day surgery claim itself—such as limited to the specific body system related to the surgery—will not impact our ability to collect a full comorbidity history for each patient.

We disagree that we should develop a more robust risk adjustment model with a higher c-statistic. The measure's final model c-statistic is 0.71, which already indicates good model discrimination.[74] According to NQF,[75] the purpose of the c-statistic is to capture patient risk, not perfectly predict the outcome. We did not adjust for other factors because patient risk, aside from mortality, is not associated with the measure outcome.

Comment: Some commenters expressed concern that OP–36 is a duplicative measure because they believe it overlaps with OP–32: Colonoscopy Measure: Facility 7-Day Risk-Standardized Hospital Visit Rate after Outpatient Colonoscopy. They urged CMS to limit the duplication of OP–32 and consider only one of the two measures for inclusion in this program.

Response: OP–36 is not duplicative and does not overlap with OP–32. OP–36 does not include the colonoscopy procedures that are included in OP–32. OP–32 was adopted in the CY 2015 OPPS/ASC final rule with comment period (79 FR 66948 through 66955) and measures facility 7-day risk-standardized hospital visit rate after outpatient colonoscopy. All endoscopy procedures (that is, low-risk colonoscopy procedures like those included in OP–32) are considered non-surgical procedures based on Medicare coding (GSI code 000) [76] and are not included in the outpatient surgery (OP–36) measure cohort.

Comment: A few commenters requested clarification regarding how the measure identifies qualifying stays, particularly inpatient admissions, immediately following surgery. Two commenters requested clarification regarding whether an inpatient admission that is planned for a patient with multiple comorbidities who is receiving outpatient surgery would be considered ''a hospital visit after an outpatient surgery.'' The commenters requested further clarification on how CMS would differentiate the patient with multiple comorbidities who is receiving outpatient surgery from the patient who has an outpatient surgery and then has an immediate complication and is admitted as an inpatient. The commenters asserted that, in both cases, the patient's inpatient admission began on the same day as the surgery and the timing of the admission (prior or after surgery) would not be apparent on the claim UB–04 form because the ICD–10–PCS procedure code will be reported for the surgery.

Response: We include admissions directly after surgery in the outcome because an admission is unexpected for the procedures included in the measure, and our overall goal is to illuminate variation in unplanned hospital visits following these same-day outpatient surgeries to improve quality.

The Medicare 3-day payment window policy affects some surgeries performed at OPDs. As discussed in the CY 2012 PFS final rule with comment period (76 FR 73279 through 73286), the policy deems outpatient services (including surgical procedures) provided by a hospital or an entity wholly owned or operated by a hospital (such as an OPD) in the 3 calendar days preceding the date of a beneficiary's inpatient admission as related to the admission. For outpatient surgical procedures affected, the OPD facility claim (for the technical portion of the surgical procedure) is bundled with the inpatient claim and is not recorded in the Medicare outpatient facility claims files; the Medicare physician claim for professional services furnished is still submitted separately.[77]

To capture outpatient surgeries that resulted in a same-day admission to inpatient status, we identify professional claims (formerly called carrier claims) for surgeries with an OPD place of service code that matches to an inpatient admission within 3 days, and lacks a corresponding OPD facility claim. We then attribute the surgery identified as affected by this policy to the appropriate OPD using the facility provider identification from the inpatient claim. The measure's target cohort includes low-risk to moderate-risk surgeries that can be safely performed as same-day surgeries and do not typically require an overnight stay or an inpatient admission. In the situation of a physician who admits the patient preoperatively because the patient has multiple comorbidities and his or her anticipated length of stay is over 2 midnights, we would expect the place of service on the inpatient claim to be coded as inpatient.[78] We will further assess the approach to identifying Medicare 3-day payment window situations during the dry run of this measure in 2017.

Comment: Two commenters asserted that using physician claims data to make determinations on where the surgeries occurred leads to inaccurate determinations because it relies on the ''place of service'' coding. These commenters stated that the ''place of service'' coding is often inaccurate and will allow physicians to receive payment for the surgery whether they code it as an inpatient or an outpatient surgery.

Response: We thank the commenters for their attention to the challenges in identifying hospital outpatient-based surgeries using place of service coding. Place of service coding is used on professional claims to specify the entity where service(s) were rendered.[79] Although we expect physicians to follow coding guidance and record the correct place of service according to the guidelines, we recognize that the place of service field may contain inaccuracies due to data entry errors (unrelated to fraud/abuse). We take the approach of first identifying surgeries from Part B professional claims with an outpatient place of service code to make sure we identify surgeries billed as inpatient under the 3-day payment window policy. This policy affects some surgeries (that is, those performed at wholly owned or wholly operated entities) performed at OPDs. As discussed in the CY 2012 MPFS final rule with comment period (76 FR 73279 through 73286), the policy deems outpatient services (including surgical procedures) provided by a hospital or an entity wholly owned or operated by a hospital (such as an OPD) in the 3 calendar days preceding the date of a beneficiary's inpatient admission as related to the admission. For outpatient surgical procedures affected, the OPD facility claim (for the technical portion

[74] Hosmer, D.W. and Lemeshow, S. (2000) Multiple Logistic Regression, in Applied Logistic Regression, Second Edition, John Wiley & Sons, Inc., Hoboken, NJ, USA. doi: 10.1002/0471722146.ch2.

[75] National Quality Forum. What Good Looks Like—Measure Submission Examples. Available at: *http://www.qualityforum.org/WorkArea/linkit.aspx?LinkIdentifier=id&ItemID=73367*.

[76] *https://www.cms.gov/Outreach-and-Education/Medicare-Learning-Network-MLN/MLNProducts/Downloads/GloballSurgery-ICN907166.pdf*.

[77] Centers for Medicare & Medicaid Services. Frequently Asked Questions (FAQs) on the 3-day Payment Window for Services Provided to Outpatients Who Later Are Admitted as Inpatients. December 2012. Available at: *https://www.cms.gov/Outreach-and-Education/Medicare-Learning-Network-MLN/MLNMattersArticles/downloads/SE1232.pdf*.

[78] CY 2016 OPPS/ASC final rule with comment period (80 FR 70538 through 70545).

[79] CY 2007 PFS proposed rule (71 FR 49062).

of the surgical procedure) is bundled with the inpatient claim and is not recorded in the Medicare hospital outpatient claims; however, the Medicare physician claim for professional services furnished is still submitted separately.[80]

The measure first attributes surgeries to an OPD if a claim is present in the Medicare Part B claims indicating an outpatient surgical procedure. We identify physician claims with outpatient hospital department or physician office place of service code in the Part B claims file. We then link Part B claims to outpatient facility claims to identify the OPD where the surgery took place. Based on prior findings by the OIG,[81] we allow the match of those with an office place of service to hospital outpatient claims for situations where a physician in a hospital-based practice assigns an office place of service. If we find no match for physician claims that indicate an outpatient place of service with outpatient facility claims, we then look for a match with inpatient claims to identify hospital admissions subject to the CMS 3-day payment policy. We identify in the professional claims surgeries in the OPD setting with an inpatient admission within 3 days and lacking a corresponding OPD facility claim. We then attribute the surgery identified as affected by this policy to the appropriate OPD using the facility provider identification from the inpatient claim.

We intend to further assess the approach to attributing outpatient surgeries during the dry run of this measure in 2017 and prior to measure implementation.

After consideration of the public comments we received, we are finalizing the adoption of the OP–36: Hospital Visits after Hospital Outpatient Surgery measure (NQF #2687) for the CY 2020 payment determination and subsequent years as proposed.

c. OP–37a-e: Outpatient and Ambulatory Surgery Consumer Assessment of Healthcare Providers and Systems (OAS CAHPS) Survey Measures

(1) Background

Currently, there is no standardized survey available to collect information on the patient's overall experience for surgeries or procedures performed within a hospital outpatient department. Some HOPDs are conducting their own surveys and reporting these results on their Web sites, but there is not one standardized survey in use to assess patient experiences with care in HOPDs that would allow valid comparisons across HOPDs. Patient-centered experience measures are a component of the 2016 CMS Quality Strategy, which emphasizes patient-centered care by rating patient experience as a means for empowering patients and improving the quality of their care.[82] In addition, information on patient experience with care at a provider/facility is an important quality indicator to help providers and facilities improve services furnished to their patients and to assist patients in choosing a provider/facility at which to seek care.

(2) Overview of Measures

The Outpatient and Ambulatory Surgery Consumer Assessment of Healthcare Providers and Systems (OAS CAHPS) Survey was developed as part of the U.S. Department of Health and Human Services' (HHS) Transparency Initiative to measure patient experiences with hospital outpatient care.[83] In 2006, CMS implemented the Hospital CAHPS (HCAHPS) Survey, which collects data from hospital inpatients about their experience with hospital inpatient care (71 FR 48037 through 48039). The HCAHPS Survey, however, is limited to data from patients who receive inpatient care for specific diagnosis-related groups for medical, surgical, and obstetric services; it does not include patients who received outpatient surgical care or procedures from ASCs or hospitals. We note that the OAS CAHPS Survey was developed to assess patients' experience of care following a procedure or surgery in a hospital outpatient department; therefore, the survey does not apply to emergency departments. Throughout the development of the OAS CAHPS Survey, CMS considered the type of data collected for HCAHPS and other existing CAHPS surveys as well as the terminology and question wording to maximize consistency across CAHPS surveys. CMS has developed similar surveys for other settings of care that are currently used in other quality reporting and value-based purchasing programs, such as the Hospital IQR Program (71 FR 68203 through 68204), the Hospital VBP Program (76 FR 26497, 26502 through 26503, and 26510), the ESRD QIP (76 FR 70269 through 70270), the HH QRP (80 FR 68709 through 68710), and the HQRP (80 FR 47141 through 47207).

The OAS CAHPS Survey contains 37 questions that cover topics such as access to care, communications, experience at the facility, and interactions with facility staff. The survey also contains two global rating questions and asks for self-reported health status and basic demographic information (race/ethnicity, educational attainment level, languages spoken at home, among others). The basic demographic information is captured in the OAS CAHPS Survey through standard AHRQ questions used to develop case-mix adjustment models for the survey. Furthermore, the survey development process followed the principles and guidelines outlined by AHRQ and its CAHPS Consortium®. The OAS CAHPS Survey received the registered CAHPS trademark in April 2015. OAS CAHPS Survey questions can be found at: *https://oascahps.org/Survey-Materials* under ''Questionnaire.''

In the CY 2017 OPPS/ASC proposed rule (81 FR 45716 through 45720), we proposed to adopt five survey-based measures derived from the OAS CAHPS Survey for the CY 2020 payment determination and subsequent years—three OAS CAHPS composite survey-based measures and two global survey-based measures (discussed below). We believe that these survey-based measures will be useful to assess aspects of care where the patient is the best or only source of information, and to enable objective and meaningful comparisons between HOPDs. We note that we made similar proposals in the ASCQR Program in section XIV.B.4.c. of the proposed rule. The three OAS CAHPS composite survey-based measures are:

- OP–37a: OAS CAHPS—About Facilities and Staff;
- OP–37b: OAS CAHPS—Communication About Procedure; and

[80] Centers for Medicare & Medicaid Services. Implementation of New Statutory Provision Pertaining to Medicare 3-Day Payment Window-Outpatient Services Treated ad Inpatient. August 9, 2010. Available at: *https://www.cms.gov/Medicare/Medicare-Fee-for-Service-Payment/AcuteInpatientPPS/Downloads/JSMTDL-10382-ATTACHMENT.pdf.*

[81] OIG, Incorrect Place-Of-Service Claims Resulted in Potential Medicare Overpayments Costing Millions (A–01–13–00506), issued May 2015 and available at: *https://oig.hhs.gov/oas/reports/region1/11300506.pdf.*

[82] CMS National Quality Strategy 2016. Available at: *https://www.cms.gov/medicare/quality-initiatives-patient-assessment-instruments/qualityinitiativesgeninfo/downloads/cms-quality-strategy.pdf.*

[83] U.S. Department of Health and Human Services. *HHS Strategic Plan, Strategic Goal 4: Ensure Efficiency, Transparency, Accountability, and Effectiveness of HHS Programs.* Feb. 2016. Available at: *http://www.hhs.gov/about/strategic-plan/strategic-goal-4/index.html.*

• OP–37c: OAS CAHPS—Preparation for Discharge and Recovery.

Each of the three OAS CAHPS composite survey-based measures consists of six or more questions.

Furthermore, the two global survey-based measures are:

• OP–37d: OAS CAHPS—Overall Rating of Facility; and

• OP–37e: OAS CAHPS—Recommendation of Facility.

The two global survey-based measures are comprised of a single question each and ask the patient to rate the care provided by the hospital and their willingness to recommend the hospital to family and friends. More information about these measures can be found at the OAS CAHPS Survey Web site (*https://oascahps.org*).

The five survey-based measures (MUC IDs: X3697; X3698; X3699; X3702; and X3703) we proposed were included on the CY 2014 MUC list,[84] and reviewed by the MAP.[85] The MAP encouraged continued development of these survey-based measures; however, we note that these measures had not been fully specified by the time of submission to the MUC List.[86] The MAP stated that these are high impact measures that will improve both quality and efficiency of care and be meaningful to consumers.[87] Further, the MAP stated that given that these measures are also under consideration for the ASCQR Program, they help to promote alignment across care settings.[88] It also stated that these measures would begin to fill a gap MAP has previously identified for this program including patient reported outcomes and patient and family engagement.[89] Several MAP workgroup members noted that CMS should consider how these measures are related to other existing ambulatory surveys to ensure that patients and facilities are not overburdened.[90]

These measures have been fully developed since being submitted to the MUC List. The survey development process followed the principles and guidelines outlined by the AHRQ[91] and its CAHPS Consortium[92] in developing a patient experience of care survey, such as: Reporting on actual patient experiences; standardization across the survey instrument; administration protocol; data analysis and reporting; and extensive testing with consumers. Development also included: Reviewing surveys submitted under a public call for measures; reviewing existing literature; conducting focus groups with patients who had recent outpatient surgery; conducting cognitive interviews with patients to assess their understanding and ability to answer survey questions; obtaining stakeholder input on the draft survey and other issues that may affect implementation; and conducting a field test.

In addition, we received public input from several modes. We published a request for information in the **Federal Register** on January 25, 2013 (78 FR 5460) requesting information regarding publicly available surveys, survey questions, and measures indicating patient experience of care and patient-reported outcomes from surgeries or other procedures for consideration in developing a standardized survey to evaluate the care received in these facilities from the patient's perspective. Stakeholder input was also obtained through communications with a TEP comprised of experts on outpatient surgery, including clinicians, providers, patient advocates, and accreditation organizations. The TEP provided input and guidance on issues related to survey development, and reviewed drafts of the survey throughout development.

After we determined that the survey instrument was near a final form, we tested the effect of various data collection modes (that is, mail-only, telephone-only, or mail with telephone follow-up of non-respondents) on survey responses. In addition, we began voluntary national implementation of the OAS CAHPS Survey in January 2016.[93] In addition, while the proposed OAS CAHPS Survey-based measures are not currently NQF-endorsed, they will be submitted to the NQF for endorsement under an applicable call for measures in the near future.

In section XIX. of this final rule with comment period, for the Hospital VBP Program, we are removing the HCAHPS Pain Management dimension (which consists of three questions) in the Patient- and Caregiver-Centered Experience of Care/Care Coordination domain. For more information about the pain management questions captured in the HCAHPS Survey and their use in the Hospital VBP Program, we refer readers to section XIX.B.3. of this final rule with comment period.

The OAS CAHPS Survey also contains two questions regarding pain management. We believe pain management is an important dimension of quality, but realize that there are concerns about these types of questions. We refer readers to section XIX. of this final rule with comment period for more information on stakeholders' concerns. However, the pain management questions in the OAS CAHPS Survey are very different from those contained in the HCAHPS Survey because they focus on communication regarding pain management rather than pain control and are part of a composite measure focusing on the preparation for discharge and recovery. Specifically, the OAS CAHPS Survey pain management communication questions read:

Q: Some ways to control pain include prescription medicine, over-the-counter pain relievers or ice packs. Did your doctor or anyone from the facility give you information about what to do if you had pain as a result of your procedure?

☐ A1: Yes, definitely.

☐ A2: Yes, somewhat.

☐ A3: No.

Q: At any time after leaving the facility, did you have pain as a result of your procedure?[94]

☐ A1: Yes.

☐ A2: No.

Unlike the HCAHPS pain management questions, which directly address the adequacy of the hospital's pain management efforts, the OAS CAHPS pain management communication questions focus on the information provided to patients regarding pain management following discharge from a hospital. We continue to believe that pain control is an appropriate part of routine patient care that hospitals should manage and is an important concern for patients, their families, and their caregivers. We also note that appropriate pain management includes communication with patients about pain-related issues, setting expectations about pain, shared decision-making, and proper prescription practices. However, we also

[84] National Quality Forum. *List of Measures under Consideration for December 1, 2014.* National Quality Forum, Dec. 2014. Available at: *https://www.qualityforum.org/Setting_Priorities/Partnership/Measures_Under_Consideration_List_2014.aspx.*

[85] National Quality Forum. *MAP 2015 Final Recommendations to HHS and CMS.* Rep. National Quality Forum, Jan. 2015. Available at: *http://www.qualityforum.org/WorkArea/linkit.aspx?LinkIdentifier=id&ItemID=78711.*

[86] Ibid.

[87] Ibid.

[88] Ibid.

[89] Ibid.

[90] Ibid.

[91] Agency for Healthcare Research and Quality. ''Principles Underlying CAHPS Surveys''. Available at: *https://cahps.ahrq.gov/about-cahps/principles/index.html.*

[92] Agency for Healthcare Research and Quality. ''The CAHPS Program.'' Available at: *https://cahps.ahrq.gov/about-cahps/cahps-program/index.html.*

[93] Outpatient and Ambulatory Surgery CAHPS Survey: ''National Implementation.'' Available at: *https://oascahps.org/General-Information/National-Implementation.*

[94] We note that this question is a control question only used to determine if the facility should have given a patient additional guidance on how to handle pain after leaving the facility. The facility is not scored based on this question.

recognize that questions remain about the ongoing prescription opioid epidemic. For these reasons, we proposed to adopt the OAS CAHPS Survey measures as described in this section, including the pain management communication questions, but will continue to evaluate the appropriateness and responsiveness of these questions to patient experience of care and public health concerns. We also welcomed feedback on these pain management communication questions for use in future revisions of the OAS CAHPS Survey.

(3) Data Sources

As discussed in the Protocols and Guidelines Manual for the OAS CAHPS Survey (*https://oascahps.org/Survey-Materials*), the survey has three administration methods: Mail-only; telephone-only; and mixed mode (mail with telephone follow-up of non-respondents). We refer readers to section XIII.D.4. of this final rule with comment period for an in-depth discussion of the data submission requirements associated with the proposed OAS CAHPS Survey measures. To summarize, to meet the OAS CAHPS Survey requirements for the Hospital OQR Program, we proposed that hospitals contract with a CMS-approved vendor to collect survey data for eligible patients at the hospitals on a monthly basis and report that data to CMS on the hospital's behalf by the quarterly deadlines established for each data collection period. Hospitals may elect to add up to 15 supplemental questions to the OAS CAHPS Survey. These could be questions hospitals develop or use from an existing survey. All supplemental questions must be placed after the core OAS CAHPS Survey questions (Questions 1 through 24). The list of approved vendors is available at: *https://oascahps.org*. We also proposed to codify the OAS CAHPS Survey administration requirements for hospitals and vendors under the Hospital OQR Program at 42 CFR 419.46(g), and refer readers to section XIII.D.4. of this final rule with comment period for more details. It should be noted that nondiscrimination requirements for effective communication with persons with disabilities and language access for persons with limited English proficiency should be considered in administration of the surveys. For more information, we refer readers to: *http://www.hhs.gov/civil-rights*.

We proposed that the data collection period for the OAS CAHPS Survey measures would be the calendar year 2 years prior to the applicable payment determination year. For example, for the CY 2020 payment determination, hospitals would be required to collect data on a monthly basis, and submit this collected data on a quarterly basis, for January 1, 2018–December 31, 2018 (CY 2018).

We further proposed that, as discussed in more detail below, hospitals will be required to survey a random sample of eligible patients on a monthly basis. A list of acceptable sampling methods can be found in the OAS CAHPS Protocols and Guidelines Manual (*https://oascahps.org/Survey-Materials*). We also proposed that hospitals would be required to collect at least 300 completed surveys over each 12-month reporting period (an average of 25 completed surveys per month). We acknowledge that some smaller hospitals may not be able to collect 300 completed surveys during a 12-month period; therefore, we proposed an exemption for facilities with lower patient censuses. Hospitals would have the option to submit a request to be exempted from performing the OAS CAHPS Survey-based measures if they treat fewer than 60 survey-eligible patients during the year preceding the data collection period. We refer readers to section XIII.B.5.c.(6) of this final rule with comment period for details on this proposal. However, we believe it is important to capture patients' experience of care at hospitals. Therefore, except as discussed in section XIII.B.5.c.(6) of this final rule with comment period below, we also proposed that smaller hospitals that cannot collect 300 completed surveys over a 12-month reporting period will only be required to collect as many completed surveys as possible, during that same time period, with surveying all eligible patients (that is, no sampling). For more information regarding these survey administration requirements, we refer readers to the OAS CAHPS Survey Protocols and Guidelines Manual at: *https://oascahps.org/Survey-Materials*.

Furthermore, we proposed that hospital eligibility to perform the OAS CAHPS Survey would be determined at the individual Medicare participating hospital level. In other words, all data collection and submission, and ultimately, also public reporting, for the OAS CAHPS Survey measures would be at the Medicare participating hospital level as identified by the hospital's CCN. Therefore, the reporting for a CCN would include all eligible patients from all eligible hospital locations of the Medicare participating hospital that is identified by the CCN.

(4) Measure Calculations

As noted above, we proposed to adopt three composite OAS CAHPS Survey-based measures (OP–37a, OP–37b, and OP–37c) and two global OAS CAHPS Survey-based measures (OP–37d and OP–37e). As with the other measures adopted for the Hospital OQR Program, a hospital's performance for a given payment determination year will be based upon the successful submission of all required data in accordance with the administrative, form, manner and timing requirements established for the Hospital OQR Program. Our proposals for OAS CAHPS data submission requirements are discussed in section XIII.D.4. of this final rule with comment period. Therefore, hospitals' scores on the OAS CAHPS Survey-based measures, discussed below, will not affect whether they are subject to the 2.0 percentage point payment reduction for hospitals that fail to report data required to be submitted on the measures selected by the Secretary, in the form and manner, and at a time, specified by the Secretary. These measure calculations will be used for public reporting purposes only.

(A) Composite Survey-Based Measures

Hospital rates on each composite OAS CAHPS Survey-based measure would be calculated by determining the proportion of ''top-box'' responses (that is ''Yes'' or ''Yes Definitely'') for each question within the composite and averaging these proportions over all questions in the composite measure. For example, to assess hospital performance on the composite measure OP–37a: OAS CAHPS—About Facilities and Staff, we would calculate the proportion of top-box responses for each of the measure's six questions, add those proportions together, and divide by the number of questions in the composite measure (that is, six).

As a specific example, we take a hospital that had 50 surveys completed and received the following proportions of ''top-box'' responses through sample calculations:

- 25 ''top-box'' responses out of 50 total responses on Question One
- 40 ''top-box'' responses out of 50 total responses on Question Two
- 50 ''top-box'' responses out of 50 total responses on Question Three
- 35 ''top-box'' responses out of 50 total responses on Question Four
- 45 ''top-box'' responses out of 50 total responses on Question Five
- 40 ''top-box'' responses out of 50 total responses on Question Six

Based on the above responses, we would calculate that hospital's measure score for public reporting as follows:

$$\text{Hospital Publicly Reported Score} = \frac{(0.5 + 0.8 + 1 + 0.7 + 0.9 + 0.8)}{6}$$

This calculation would give this example hospital a raw score of 0.78 or 78 percent for the OP–37a measure for purposes of public reporting. We note that each percentage would then be adjusted for differences in the characteristics of patients across hospitals as described in XIII.B.5.c.(7) of this final rule with comment period, below. As a result, the final percentages may vary from the raw percentage as calculated in the example above.

(B) Global Survey-Based Measures

We proposed to adopt two global OAS CAHPS Survey measures. OP–37d asks the patient to rate the care provided by the hospital on a scale of 0 to 10, and OP–37e asks about the patient's willingness to recommend the hospital to family and friends on a scale of ''Definitely No'' to ''Definitely Yes.'' Hospital performance on each of the two global OAS CAHPS Survey-based measures would be calculated by proportion of respondents providing high-value responses (that is, a 9–10 rating or ''Definitely Yes'') to the survey questions over the total number of respondents. For example, if a hospital received 45 9- and 10-point ratings out of 50 responses, this hospital would receive a 0.9 or 90 percent raw score, which would then be adjusted for differences in the characteristics of patients across hospitals as described in section XIII.B.5.c.(7) of this final rule with comment period below, for purposes of public reporting.

(5) Cohort

The OAS CAHPS Survey is administered to all eligible patients—or a random sample thereof—who had at least one outpatient surgery/procedure during the applicable month. Eligible patients, regardless of insurance or method of payment, can participate.

For purposes of each survey-based measure captured in the OAS CAHPS Survey, an ''eligible patient'' is a patient 18 years or older:

- Who had an outpatient surgery or procedure in a hospital, as defined in the OAS CAHPS Survey Protocols and Guidelines Manual (*https://oascahps.org/Survey-Materials*);
- Who does not reside in a nursing home;
- Who was not discharged to hospice care following their surgery;
- Who is not identified as a prisoner; and
- Who did not request that hospitals not release their name and contact information to anyone other than hospital personnel.

There are a few categories of otherwise eligible patients who are excluded from the measure as follows:

- Patients whose address is not a U.S. domestic address;
- Patients who cannot be surveyed because of State regulations;
- Patient's surgery or procedure does not meet the eligibility CPT or G-codes as defined in the OAS CAHPS Protocols and Guidelines Manual (*https://oascahps.org/Survey-Materials*); and
- Patients who are deceased.

(6) Exemption

We understand that hospitals with lower patient censuses may be disproportionately impacted by the burden associated with administering the survey and the resulting public reporting of OAS CAHPS Survey results. Therefore, we proposed that hospitals may submit a request to be exempted from participating in the OAS CAHPS Survey-based measures if they treat fewer than 60 survey-eligible patients during the ''eligibility period,'' which is the calendar year before the data collection period. All exemption requests will be reviewed and evaluated by CMS. For example, for the CY 2020 payment determination, this exemption request would be based on treating fewer than 60 survey-eligible patients in CY 2017, which is the calendar year before the data collection period (CY 2018) for the CY 2020 payment determination.

To qualify for the exemption, hospitals must submit a participation exemption request form, which will be made available on the OAS CAHPS Survey Web site (*https://oascahps.org*) on or before May 15 of the data collection calendar year. For example, the deadline for submitting an exemption request form for the CY 2020 payment determination would be May 15, 2018. We determined the May 15 deadline in order to align with the deadline for submitting Web-based measures, and because we believe this deadline allows hospitals sufficient time to review the previous years' patient lists and determine whether they are eligible for an exemption based on patient population size.

In addition, as discussed above, hospital eligibility to perform the OAS CAHPS Survey would be determined at the individual Medicare participating hospital level; therefore, an individual hospital that meets the exemption criteria outlined above may submit a participation exemption request form. CMS will then assess that hospital's eligibility for a participation exemption due to facility size. However, no matter the number of hospital locations of the Medicare participating hospital, all data collection and submission, and ultimately, also public reporting, for the OAS CAHPS Survey measures would be at the Medicare participating hospital level, as identified by its CCN. Therefore, the reporting for a CCN would include all eligible patients from all locations of the eligible Medicare participating hospital as identified by its CCN.

(7) Risk Adjustment

In order to achieve the goal of fair comparisons across all hospitals, we believe it is necessary and appropriate to adjust for factors that are not directly related to hospital performance, such as patient case-mix, for these OAS CAHPS Survey measures. The survey-based measures are adjusted for patient characteristics such as age, education, overall health status, overall mental health status, type of surgical procedure, and how well the patient speaks English. These factors influence how patients respond to the survey but are beyond the control of the hospital and are not directly related to hospital performance. For more information about patient-mix adjustment for these measures, we refer readers to: *https://oascahps.org/General-Information/Mode-Experiment*.

(8) Public Reporting

We will propose a format and timing for public reporting of OAS CAHPS Survey data in future rulemaking prior to implementation of the measures. Because CY 2016 is the first year of voluntary national implementation for the OAS CAHPS Survey, and we believe

using data from this voluntary national implementation will help inform the displays for public reporting of OAS CAHPS Survey data for the Hospital OQR Program, we did not propose a format or timing for public reporting of OAS CAHPS Survey data in the proposed rule.

As currently proposed, hospital locations that are part of the same Medicare participating hospital (operates under one Medicare provider agreement and one CCN) must combine data for collection and submission for the OAS CAHPS Survey across their multiple facilities. These results from multiple locations of the Medicare participating hospital would then be combined and publicly reported on the *Hospital Compare* Web site for the single Medicare participating hospital. To increase transparency in public reporting and improve the usefulness of the *Hospital Compare* Web site, we intend to note on the Web site instances where publicly reported measures combine results from two or more locations of a single multi-location Medicare participating hospital.

We invited public comments on our proposals as discussed above to adopt, for the CY 2020 payment determination and subsequent years, the five survey-based measures: (1) OP–37a: Outpatient and Ambulatory Surgery Consumer Assessment of Healthcare Providers and Systems (OAS CAHPS)—About Facilities and Staff; (2) OP–37b: OAS CAHPS—Communication About Procedure; (3) OP–37c: OAS CAHPS—Preparation for Discharge and Recovery; (4) OP–37d: OAS CAHPS—Overall Rating of Facility; and (5) OP–37e: OAS CAHPS—Recommendation of Facility.

Comment: Several commenters supported inclusion of the OP–37a-e OAS CAHPS Survey-based measures in the Hospital OQR Program. One commenter agreed with the MAP that these survey measures are ''high impact measures that will improve care quality and efficiency of care and be meaningful to consumers.'' This commenter also supported CMS' proposal to include the same measures for the ASCQR program to facilitate alignment between the programs. Another commenter supported the OAS CAHPS Survey-based measures because patient-reported outcomes are an integral part in understanding how the delivery system is performing and also helps to bridge a partnership with patients. One commenter agreed with CMS' reasons for proposing to adopt the OAS CAHPS Survey-based measures in the Hospital OQR Program, and asserted the importance of pain management communication, including communication with patients about pain-related issues, setting expectations about pain, shared decision-making and proper prescription practices. One commenter appreciated CMS' attempt to fill an important gap because there are currently no standardized surveys available to collect information on the patient's overall experience for surgeries or procedures performed within a hospital outpatient department. One commenter agreed that the OAS CAHPS Survey-based measures are an important quality indicator that can ultimately be used in combination with other measures to assist patients as they decide where to seek care, and has seen significant interest among HOPDs that want to begin collecting data voluntarily.

Response: We thank the commenters for their support.

Comment: A few commenters expressed concerns that there is very little publicly available information detailing the survey development. The commenters requested additional information regarding the OAS CAHPS Survey development process, and also requested clarification on whether the measures were developed with multi-stakeholder input.

Response: As discussed in the CY 2017 OPPS/ASC proposed rule (81 FR 45716 through 45718), background on the survey development process is publicly available on the OAS CAHPS Web site: *http://oascahps.org/*. The OAS CAHPS Survey development process followed the principles and guidelines outlined by the AHRQ [95] and its CAHPS Consortium [96] in developing a patient experience of care survey, such as: Reporting on actual patient experiences; standardization across the survey instrument; administration protocol; data analysis and reporting; and extensive testing with consumers. This process included: Reviewing surveys submitted under a public call for measures; reviewing existing literature; conducting focus groups with patients who had recent outpatient surgery; conducting cognitive interviews with patients to assess their understanding and ability to answer survey questions; obtaining stakeholder input on the draft survey and other issues that may affect implementation; conducting a field test; and conducting a test of the various data collection mode effects on survey responses .

We published a request for information on January 25, 2013 (78 FR 5459) requesting information regarding publicly available surveys, survey questions, and measures indicating patient experience of care and patient-reported outcomes from surgeries or other procedures for consideration in developing a standardized survey to evaluate the care received in these facilities from the patient's perspective. In 2013 and 2014, we conducted six focus groups with patients who had recent outpatient surgeries or procedures in an HOPD or ASC. Analysis of the focus group feedback [97] led to development of the final domain structure for the survey, and identified the following topic areas for assessment under a patient experience of care survey for these procedures: (1) Preparations for surgery; (2) check-in process; (3) facility environment; (4) staff communication; (5) discharge; (6) recovery and outcomes; and (7) overall experience.

We convened and consulted with two TEPs throughout the development and testing of the OAS CAHPS Survey.[98] In 2013, we established a 10-member TEP consisting of experts on outpatient surgery, including clinicians, providers, patient advocates, and representatives from other stakeholder organizations to provide preliminary guidance in the establishment of relevant topics and to comment on the draft versions for cognitive testing and the field test. Information about the TEP was documented in materials supporting an information collection request for the voluntary national implementation of the OAS CAHPS Survey published in the **Federal Register** (80 FR 2430 through 2431).[99] We established a second TEP in 2015 to solicit input and guidance related to national implementation protocols and the survey mode experiment.

We conducted three rounds of cognitive testing among patients who received outpatient surgery at an ASC or hospital outpatient department before finalizing the field test version of the OAS CAHPS Survey. With each round of testing, we modified the survey to

[95] Agency for Healthcare Research and Quality. ''Principles Underlying CAHPS Surveys.'' Available at: *https://cahps.ahrq.gov/about-cahps/principles/index.html*.

[96] Agency for Healthcare Research and Quality. ''The CAHPS Program.'' Available at: *https://cahps.ahrq.gov/about-cahps/cahps-program/index.html*.

[97] Hospital Outpatient Surgery Department/Ambulatory Surgery Center Experience of Care Survey Focus Group Report (Submitted to CMS June 2013).

[98] Information about feedback from the first TEP was documented in the **Federal Register** at 80 FR 2430.

[99] Available at: *https://www.cms.gov/Regulations-and-Guidance/Legislation/PaperworkReductionActof1995/PRA-Listing-Items/CMS-10500.html*.

reflect the comments from the previous round.

The survey was tested in both the outpatient and ASC setting in 2014 (field testing) and 2015 (mode testing) and found to be reliable. We refer readers to 80 FR 2430 and the OAS CAHPS Information Collection Request Paperwork Reduction Act Package [100] for more information about field and mode testing for these measures. The field test collected data through a mixed-mode design, which consisted of a mail survey with telephone follow-up of non-respondents. We recruited a total of 36 facilities for the field test: 18 hospital outpatient departments and 18 ASCs. Approximately 116 patient records were selected from each of the 36 facilities, for a total sample of 4,179 patients. The field test data collection yielded a 46-percent adjusted response rate, or 1,863 completed surveys (31 percent computer-assisted telephone interviewing, 68 percent mail, and 0.8 percent break-offs). Once partial surveys were removed from the analysis set, 1,849 total surveys were used in the evaluation. The field test data were evaluated and analyzed to identify item-level refinements necessary for the survey instrument. The field test psychometric analysis included evaluations of individual items and composite item sets. Individual items were analyzed to report item-level missing data and item response distributions (including ceiling and floor effects), which included response variance. Composite item sets were analyzed using factor analysis and item response theory (IRT) analysis to assess dimensionality, discriminability, dimensional coverage, and subgroup response differences. Internal consistency statistics (reliability) and correlational checks for composite validity were performed to evaluate the final composite item sets. The item-level recommendations for the field test were based on the findings from the factor analyses, the internal consistency checks, and the IRT analysis. As a result, 10 questions were recommended for deletion. Reliability of the remaining measures was assessed using the Cronbach's alpha coefficient, with an estimate range from zero to one. An estimate of zero indicated no measurement consistency and one indicates perfect consistency. The cutoff criterion for the examination was 0.70, which indicated adequate consistency.[101] The composites analytically derived maintained adequate internal consistency even when reduced to Top-Box scoring and across the facility types and modes of administration.

In 2015, we conducted a mode experiment for the OAS CAHPS Survey. We refer readers to *https://oascahps.org/General-Information/Mode-Experiment* for more details. The facility sample included hospital outpatient departments and ASCs that reflect industry characteristics and was sorted to achieve implicit stratification by four facility characteristics: Single specialty or multispecialty; facility size (large, medium, or small), facility location (urban or rural), and facility ownership (public, private, or other). A total of 70 facilities (38 hospital outpatient departments and 32 ASCs) participated in the mode experiment by providing a monthly patient information file for patients served during one or more of the three sample months (July, August, and September 2015). The patient sample consisted of 13,576 patients who had an eligible surgery or procedure during a sample month and who met other survey eligibility criteria. Data collection for each sample month began approximately 21 days after the sample month closed and ended within a 6-week period after the survey was initiated. The overall response rate (for all three modes) was 39 percent. The response rate for the mail-only mode was 37 percent, the telephone-only response rate was 34 percent, and the mixed-mode response rate was 50 percent.

We began voluntary national implementation of the OAS CAHPS Survey in January 2016 and refer readers to *https://oascahps.org/General-Information/National-Implementation* for more details. Preliminary data from the voluntary reporting period (Quarter 1 data), which included 24,201 sampled patients from 74 facilities, indicate a response rate of 33 percent for both telephone and mail modes. Voluntary national implementation is ongoing.

Comment: Several commenters recommended that CMS delay implementation of OAS CAHPS measures because the measures are not NQF-endorsed, and asserted that this will significantly limit hospitals' insight into whether the measures portray hospital performance in a fair and accurate manner until they are endorsed by the NQF.

Response: We disagree with commenters' recommendation that we should delay implementation of the OAS CAHPS measures in the Hospital OQR Program. We refer readers to our discussion above regarding measures that are not NQF endorsed. The OAS CAHPS Survey has undergone rigorous testing. As discussed in the measure description, the five survey-based measures (MUC IDs: X3697; X3698; X3699; X3702; and X3703) were included on the CY 2014 MUC list,[102] and reviewed by the MAP.[103] The MAP encouraged continued development of these survey-based measures; however, we note that these measures had not been fully specified by the time of submission to the MUC List.[104] The MAP stated that these are high impact measures that will improve both quality and efficiency of care and be meaningful to consumers.[105] Further, the MAP stated that given that these measures are also under consideration for the ASCQR Program, they help to promote alignment across care settings.[106] It also stated that these measures would begin to fill a gap MAP has previously identified for this program including patient reported outcomes and patient and family engagement.[107] Several MAP workgroup members noted that CMS should consider how these measures are related to other existing ambulatory surveys to ensure that patients and facilities are not overburdened.[108]

These measures have been fully developed since being submitted to the MUC List. The survey development process followed the principles and guidelines outlined by the AHRQ [109] and its CAHPS Consortium [110] in developing a patient experience of care survey, such as: Reporting on actual patient experiences; standardization across the survey instrument; administration protocol; data analysis

[100] OMB Control Number 0938–1240, ''Consumer Assessment of Healthcare providers and Systems Outpatient and Ambulatory Surgery (OAS CAHPS) Survey (CMS–10500).'' Available at: *https://www.reginfo.gov/public/do/PRAViewICR?ref_nbr=201510-0938-003*.

[101] Aron, A. and Aron, E.N. *Statistics for Psychology.* (1999) 2nd ed. New Jersey: Prentice Hall.

[102] National Quality Forum. *List of Measures under Consideration for December 1, 2014.* National Quality Forum, Dec. 2014. Available at: *https://www.qualityforum.org/Setting_Priorities/Partnership/Measures_Under_Consideration_List_2014.aspx*.

[103] National Quality Forum. *MAP 2015 Final Recommendations to HHS and CMS.* Rep. National Quality Forum, Jan. 2015. Available at: *http://www.qualityforum.org/WorkArea/linkit.aspx?LinkIdentifier=id&ItemID=78711*.

[104] Ibid.

[105] Ibid.

[106] Ibid.

[107] Ibid.

[108] Ibid.

[109] Agency for Healthcare Research and Quality. ''Principles Underlying CAHPS Surveys''. Available at: *https://cahps.ahrq.gov/about-cahps/principles/index.html*.

[110] Agency for Healthcare Research and Quality. ''The CAHPS Program.'' Available at: *https://cahps.ahrq.gov/about-cahps/cahps-program/index.html*.

and reporting; and extensive testing with consumers. Development also included: Reviewing surveys submitted under a public call for measures; reviewing existing literature; conducting focus groups with patients who had recent outpatient surgery; conducting cognitive interviews with patients to assess their understanding and ability to answer survey questions; obtaining stakeholder input on the draft survey and other issues that may affect implementation; and conducting a field test.

In addition, as discussed above, we received public input from several modes. We published a request for information in the **Federal Register** on January 25, 2013 (78 FR 5460) requesting information regarding publicly available surveys, survey questions, and measures indicating patient experience of care and patient-reported outcomes from surgeries or other procedures for consideration in developing a standardized survey to evaluate the care received in these facilities from the patient's perspective. As stated in more detail above, stakeholder input was also obtained through communications with a Technical Expert Panel (TEP) comprised of experts on outpatient surgery, including clinicians, providers, patient advocates, and accreditation organizations. The TEP provided input and guidance on issues related to survey development, and reviewed drafts of the survey throughout development.

After we determined that the survey instrument was near a final form, we tested the effect of various data collection modes (that is, mail-only, telephone-only, or mail with telephone follow-up of non-respondents) on survey responses. In addition, we began voluntary national implementation of the OAS CAHPS Survey in January 2016.[111]

Given these consensus-building efforts, we believe the measure reflects consensus among affected parties for a standardized instrument assessing patients' experience of care in the hospital setting. As such, we do not think it is necessary to delay implementation of the OAS CAHPS Survey until it achieves NQF endorsement. We believe the benefits of measure data for patients and hospitals outweigh waiting for NQF endorsement. We also note, however, that we intend to submit the OAS CAHPS Survey-based measures to NQF for endorsement under an applicable call for measures in the near future.

We also disagree with commenters' assertion that lack of NQF endorsement will limit hospitals' insight into whether the measures portray hospital performance in a fair and accurate manner. The survey was tested in both the outpatient and ASC setting in 2014 (field testing) and 2015 (mode testing) and found to be reliable. We refer readers to *https://oascahps.org/* for more information about field and mode testing for these measures. The OAS CAHPS Survey development process followed the principles and guidelines outlined by AHRQ and its CAHPS Consortium.[112] This process included reviewing existing literature; reviewing surveys submitted under a public call for measures; conducting focus groups with patients who had recent outpatient surgery; conducting cognitive interviews with patients to assess their understanding and ability to answer survey questions; obtaining stakeholder input on the draft survey and other issues that may affect implementation; conducting a field test; and conducting a test of the various data collection mode effects on survey responses.

In 2014, the field test data were evaluated and analyzed to identify item-level refinements necessary for the survey instrument. The field test psychometric analysis included evaluations of individual items and composite item sets. Individual items were analyzed to report item-level missing data and item response distributions (including ceiling and floor effects), which included response variance. Composite item sets were analyzed using factor analysis and item response theory (IRT) analysis to assess dimensionality, discriminability, dimensional coverage, and subgroup response differences. Internal consistency statistics (reliability) and correlational checks for composite validity were performed to evaluate the final composite item sets. The item-level recommendations for the field test were based on the findings from the factor analyses, the internal consistency checks, and the IRT analysis. As a result, 10 questions were recommended for deletion. Reliability of the remaining measures was assessed using the Cronbach's alpha coefficient, with an estimate range from zero to one. An estimate of zero indicated no measurement consistency and one indicates perfect consistency. The cutoff criterion for the examination was 0.70, which indicated adequate consistency.[113] The composites analytically derived maintained adequate internal consistency even when reduced to Top-Box scoring and across the facility types and modes of administration.

Based on the rigorous testing that was undertaken during the development process, we believe the OAS CAHPS Survey, and measure scores derived therefrom, are both reliable and valid. Therefore, we believe it is unnecessary to delay implementation of the OAS CAHPS Survey in the hospital outpatient setting.

Comment: Some commenters recommended CMS to convene stakeholder group of providers, consumers, venders, and other relevant parties to discuss the CAHPS survey questions holistically to address how these surveys should be distributed in the future, prioritize the development of these survey tools to a limited subset of provider settings, and determine how to manage the issue of overlapping care.

Response: We refer readers to our response above discussing measure development and stakeholder input. To reiterate, we received public input for the OAS CAHPS Survey from several modes. As stated above, we published a request for information in the **Federal Register** on January 25, 2013 (78 FR 5460). Stakeholder input was also obtained through communications with two TEPs and the MAP. However, moving forward, we will continue to seek stakeholder input on the appropriateness of procedures that are appropriate for the hospital setting as well as improving the quality of care provided in the hospital outpatient setting.

Comment: Commenters expressed concerns about the significant resources needed to collect the survey, and also expressed concerns that the CAHPS® program already includes multiple overlapping survey tools. The commenters asserted that the inclusion of another survey may lead to confusion among patients about which provider is being assessed and create excessive survey administration burden for hospitals.

Response: While we understand commenters' concerns regarding resources needed to collect the survey, and survey administration burden for hospitals, the OAS CAHPS Survey was developed for use in assessing patient experience of care for select outpatient surgical procedures. We are dedicated to

[111] Outpatient and Ambulatory Surgery CAHPS Survey: ''National Implementation.'' Available at: *https://oascahps.org/General-Information/National-Implementation.*

[112] Agency for Healthcare Research and Quality. ''The CAHPS Program.'' Available at: *https://ahrq.gov/cahps/index.html.*

[113] Aron, A. and Aron, E.N. *Statistics for Psychology.* (1999) 2nd ed. New Jersey: Prentice Hall.

improving the quality of care provided to patients, and believe patients are a vital source of information in assessing the quality of care provided at a hospital outpatient department. We believe that the benefits of this measure, such as giving patients the opportunity to compare and assess quality of care in the outpatient setting in a standardized and comparable manner, outweigh the burdens. Regarding confusion among patients and multiple overlapping survey tools, other CAHPS surveys, such as the HCAHPS Survey, are tailored to different aspects of care provided by hospitals, such as inpatient care. In addition, the survey introduction letter provided to patients includes the date and location of the surgery or procedure that the patient received at the facility. Furthermore, patients will also be reminded of the date and location of the surgery or procedure they received during the telephone interviews. For these reasons, we do not believe there will be issues associated with overlap or confusion for these surveys.

Comment: One commenter asserted that requiring hospitals to meet the proposed target minimum number of surveys (that is, 300 completed surveys) would be difficult for smaller facilities and recommended that the target minimum number of surveys instead be set at 100 completed surveys, in alignment with the requirements from the first year of the HCAHPS Survey's use in the inpatient setting. Another commenter expressed concerns that comparing an HOPD with a small patient population to a sample of a much larger HOPD's population may weaken the statistical reliability of the survey results and comparability of facilities' scores. This commenter recommended that facilities should be measured against comparable facility size and clinical make-up, and urged CMS to increase the number of survey-eligible patients a facility can have to qualify for the exception.

Response: We are committed to ensuring high reliability in publicly reported OAS CAHPS Survey results. To make abundantly clear our policies discussed in the proposed rule, hospital outpatient departments will fall into one of three categories based on their past and projected total patient volume, will fall into one of three scenarios. In order to determine its projected total patient volume, we recommend hospitals review their accounts receivable and payable records. From these accounting documents, a facility can determine its past patient volume and project future patient volume. Acceptable methods of sampling survey-eligible patients can be found in Chapter IV-Sampling Procedures of the Protocols and Guidelines Manual at *https://oascahps.org/Survey-Materials*.

The first category includes hospitals that estimate receiving more than 300 completed surveys during the 12-month reporting period based on its past and projected total patient volume. We note that in the CY 2017 OPPS/ASC proposed rule (81 FR 45718), we stated that ''hospitals will be required to survey a random sample of eligible patients on a monthly basis.'' We also note that elsewhere in the proposed rule (81 FR 45719), we also stated that, ''the OAS CAHPS Survey is administered to all eligible patients—or a random sample thereof—who had at least one outpatient surgery/procedure during the applicable month.'' We recognize that the language is confusing and are clarifying here that hospitals that anticipate receiving more than 300 surveys have a choice. They are required to either: (1) Randomly sample their eligible patient population, or (2) survey their entire OAS CAHPS eligible patient population. In other words, random sampling is optional.

We calculated the number 300 by using the reliability criterion for the OAS CAHPS Survey measures, which is 0.8 or higher.[114] This requires facilities with large patient populations to randomly sample a sufficient number of patients to yield at least 300 completed surveys over each 12-month reporting period. This criterion allows at least 80 percent power to detect a 10 percent difference for binary survey outcome at the 0.05 significance level.[115] A reliability criterion of 0.8 is the normal standard for random sample surveys.[116] The 300 completed surveys translates into approximately 25 completed surveys per month (25 completes x 12 months = 300 completes per year). At this time, there are no plans to adjust the threshold of the target minimum of 300 completed surveys for the OAS CAHPS Survey for larger facilities that have the option to undertake random sampling. To do so could decrease the reliability of the OAS CAHPS survey results. Survey data will be collected on a monthly basis and uploaded on a quarterly basis. As stated in the Protocols and Guideline Manual, survey vendors will report the ''total patient volume,'' ''total eligible patients,'' ''number of patients sampled,'' and the ''number of completed surveys'' for each reporting period.[117] These reported patient data will be used to ensure sampling requirements are followed.

Second, if a hospital does not anticipate receiving 300 completed surveys during the 12-month reporting period based on its past and projected total patient volume, it must survey all eligible patients served during the reporting period. In other words, these smaller facilities must undertake a census of all eligible patients served; there is no option to randomly sample. Smaller facilities' OAS CAHPS survey results are not affected by the reliability issues underlying the target minimum policy because conducting a census—surveying all eligible patients in a population, as opposed to sampling and administering the survey to a portion of that eligible patient population—measures the true value of the patient population by including all eligible patients at the facility in the survey population. However, we will continue to review the data from the voluntary implementation to identify and address any issues related to the reliability and comparability of OAS CAHPS Survey-based measure rates across facilities. Thus the OAS CAHPS results for the larger facilities and the smaller facilities both achieve the statistical precision of the reliability criterion. For example, if two different facilities with large patient volumes in a particular year, both randomly sample their eligible patients and receive 300 completed surveys, they would both have met the reliability criterion during that year. As a second example, if in a particular year, one facility estimates it will receive more than 300 completed surveys in that year and samples and obtains 300 completed surveys while, during that same year, a different facility does not anticipate receiving 300 completed surveys and undertakes a census of its entire survey-eligible patients, both facilities would achieve the statistical precision of the reliability criterion for that year. As a third example, for a facility that obtained 300 completed surveys from their 1500 total eligible patients served in one year, but experienced a change in patient volume during the next year, and surveyed their entire 200 eligible patients served the next year, the facility would have met the reliability criterion during both years.

Third, if in the prior year a hospital serves less than 60 survey eligible patients, the facility can request an exemption from the OAS CAHPS

[114] Cohen, Jacob. 1977. Statistical Power Analysis for the Behavioral Sciences. New York: Academic Press.

[115] Ibid.

[116] Ibid.

[117] Outpatient and Ambulatory Surgery CAHPS Survey: ''Protocol and Guidelines Manual.'' Available for download at: *https://oascahps.org/Survey-Materials*.

Survey administration requirement because these few surveys would not provide reliable data and the burden associated with administering the survey as well as the resulting public reporting of OAS CAHPS Survey results would be disproportionately burdensome. At this time, there are no plans to adjust the threshold for the exemption. This request and related deadlines will be available on the OAS CAHPS Survey Web site (*https://oascahps.org*) on or before May 15 of the data collection calendar year as discussed in the proposed rule (81 FR 45719).

The facility-level data for both large and small facilities will be adjusted to account for patient characteristics that impact response tendencies (that is, patient-mix) and ensure fair comparisons across all facilities. As discussed in the CY 2017 OPPS/ASC proposed rule (81 FR 45720), the survey-based measures are adjusted for patient characteristics such as age, education, overall health status, overall mental health status, type of surgical procedure, and how well the patient speaks English. We refer readers to the Protocols and Guidelines Manual, available at: *https://oascahps.org/Survey-Materials*, for more information regarding the patient-mix adjustment methodology. However, we do not adjust for facility-level characteristics that are under control of the facility, for example, specialty or geographic location. During the voluntary implementation of the survey, we will continue to review the data collected to identify and address any issues related to the reliability and comparability of measure rates across facilities as appropriate. In addition, we believe the 60 survey-eligible patient exemption policy appropriately balances the benefit of ensuring that patient experience of care data is collected and publicly reported for use by patients in making decisions about their health care against the burden of requiring facilities to administer the OAS CAHPS Survey. For this reason, we do not believe it would be appropriate to increase the exemption threshold at this time.

Comment: Many commenters expressed concerns regarding the length of the OAS CAHPS Survey. A number of commenters recommended that CMS shorten the OAS CAHPS Survey in order to increase the survey completion rates, and further recommended CMS allow each facility to have more choice in the questions they include in its survey. One commenter expressed concern that the OAS CAHPS Survey's length will limit the number of completed surveys a hospital receives because patients will be overwhelmed by the number of questions in the survey or otherwise unable to complete the survey, and in turn, impact the ability of the hospital to use the survey data in quality improvement activities.

Response: The OAS CAHPS Survey is comparable in length and survey response rate to other patient experience of care surveys. For example, the HCAHPS Survey is 32 questions long, (*http://www.hcahpsonline.org/surveyinstrument.aspx*), and the response rate for the HCAHPS Survey has generally been 32 to 33 percent, (for example see: *https://www.medicare.gov/hospitalcompare/details.html?msrCd=prnt1grp1&ID=220066&stCd=MA&stName=Massachusetts*). By comparison, the OAS CAHPS Survey is 37 questions long, and the survey's 2015 mode experiment showed an overall response rate of 39 percent.[118] The mode experiment, a final step in the measurement development process, was conducted in 2015 to test the OAS CAHPS Survey questions when administered by mail-only, telephone-only, and mixed-mode (mail with telephone follow-up).

In addition, the 24 core questions of the OAS CAHPS Survey are either directly actionable (that is, give feedback to hospitals) or inform the need for patients to answer subsequent questions that are actionable. For example, Question 10, which asks whether a patient received anesthesia, establishes whether a patient should respond to Question 11 and Question 12, which provide actionable feedback to hospitals with the patient about the anesthesia process and possible side effects. We also encourage hospitals to consider adding specific questions of interest to the OAS CAHPS Survey. As noted in the CY 2017 OPPS/ASC proposed rule (81 FR 45718), HOPDs may elect to add up to 15 supplemental questions to the OAS CAHPS Survey. These could be questions HOPDs develop specifically for use alongside the OAS CAHPS Survey, or questions from an existing survey.

However, we continue to evaluate the utility of individual questions as we collect new data from the survey's national implementation and will consider different options for shortening the OAS CAHPS Survey without the loss of important data in the future. Specifically, we are contemplating removing two demographic questions—the ''gender'' and ''age'' questions—from the OAS CAHPS Survey in its next update if we determine that it is feasible, when collecting information on survey-eligible patients from facility records, that gender and age information could also be collected via these records.

Comment: One commenter requested that CMS remove or revise two questions on the OAS CAHPS Survey asking whether a doctor or anyone from the facility: (1) Gave the patient all the information needed about their procedure; and/or (2) gave the patient easy to understand instructions about preparing for their procedure. This commenter asserted that patient education is solely within the purview of the doctor's office, not the facility, and should therefore be removed from a survey assessing patients' experience of care at the facility.

Response: We disagree with the commenter's assertion that patient education is solely within the purview of the doctor's office. We believe it is the facility's responsibility to ensure that a doctor, nurse, or other facility staff member provides the patient with information about preparing for their procedure, the procedure itself, and what to expect following discharge from the hospital. Furthermore, the OAS CAHPS Survey-based measures were reviewed by two 10-member TEPs comprised of experts on outpatient surgery, including clinicians, providers, patient advocates, and representatives from other stakeholder organizations. These TEPs provided guidance in the establishment of relevant topics for assessing patient experience of care at an outpatient facility, and commented on draft versions of the survey for cognitive and field testing. These TEPs agreed with the questions as drafted, including those regarding the facility's communication with patients. Therefore, we believe it is appropriate to include these important communications between the patient and the facility about their care in the OAS CAHPS Survey.

The OAS CAHPS Survey is focused on patients' experience of care received for their ambulatory surgery or procedure. A physician/surgeon who performs surgeries/procedures at a facility is a member of that facility with both rights and responsibilities. We believe it is the facility's responsibility to ensure that someone—whether the doctor, nurse, or other facility staff member—provide patients with information about preparing for their procedure, about the procedure itself, as well as what to expect following the procedure/surgery. Therefore, we believe it is appropriate to include these

[118] Outpatient and Ambulatory Surgery CAHPS Survey: ''Mode Experiment.'' Available at: *https://oascahps.org/General-Information/Mode-Experiment.*

important communications with patients in the OAS CAHPS Survey.

Comment: One commenter requested that CMS reconsider its position on respondent confidentiality for the OAS CAHPS Survey administration to align with the HCAHPS survey, which allows for the release of patient-level data for quality improvement purposes, with the stipulation that a patient's identity should not be shared with direct care staff.

Response: The administration protocols for OAS CAHPS follow protocols for other more recent CAHPS® Surveys, restricting the release of patient-level data if the patient has not consented. For example, the Home Health Care CAHPS (HHCAHPS) Survey protocol states: ''HHCAHPS Survey approved vendors can provide responses linked to a sample patient's name and other identifying information only if the sample patient gives his or her consent on the 'Consent to Share Identifying Information' question.'' [119] For the Hospital IQR Program, because hospitals can self-administer the HCAHPS Survey, we do not state that patients' responses and identifying information will not be shared with the hospital. However, HCAHPS Surveys administered via a third-party vendor are not linked to a sample patient's name unless the patient gives his or her consent, and we encourage hospitals to undertake measures to protect patient confidentiality when self-administering the survey. We note that facilities may choose to add the ''Consent to Share'' question [120] to the OAS CAHPS Survey. This question asks whether a patient gives permission for their name to be linked to their survey responses. However, we note that each facility should consult with its own counsel to ensure compliance with applicable privacy and security laws.

Comment: One commenter recommended that CMS align the OAS CAHPS Survey with the HCAHPS Survey by: (1) Adopting the same four-point scale used in the HCAHPS Survey for ratings questions (that is, ''Always; Usually; Sometimes; or Never'' responses); (2) separating questions about nurses and doctors treating a patient into two separate sets of questions; (3) adopting the same series of questions used in the HCAHPS Survey regarding interactions with doctors and nurses; and (4) adding the same new medication questions used in the HCAHPS Survey to the OAS CAHPS Survey (Question 15: ''During this hospital stay, were you given any medicine that you had not taken before?''; Question 16: ''Before giving you any new medicine, how often did hospital staff tell you what the medicine was for?''; Question 17: ''Before giving you any new medicine, how often did hospital staff describe possible side effects in a way you could understand?'').

Response: As part of the survey development process, the OAS CAHPS Survey was aligned as appropriate with other CAHPS Surveys, including the HCAHPS Survey. However, unlike HCAHPS, which assesses patients experience in the inpatient setting; the OAS CAHPS Survey assesses patient experience of care for outpatient surgical procedures, and therefore, takes the outpatient/ambulatory setting into account and captures information about the appropriate experiences of care for this particular setting.

We note that the four-point scale response set used for some HCAHPS Survey questions, ''Always; Usually; Sometimes; or Never,'' is appropriate to use when a question includes the phrase ''how often.'' This is appropriate in the inpatient setting, where patients stay in the hospital for a longer period of time. The OAS CAHPS Survey questions use a single point in time reference for an outpatient surgery or procedure because patients spend a significantly shorter period of time in the facility. Therefore, we believe the OAS CAHPS Survey questions and response options are worded appropriately (that is, for the majority of the OAS CAHPS Survey questions, the response categories are: ''Yes, definitely;'' ''Yes, somewhat;'' or ''No.'' Response categories for other questions are: ''Yes'' or ''No'' for this setting of care and treatment situation. The OAS CAHPS Survey instrument can be found at: *https://oascahps.org/Survey-Materials*.

In the OAS CAHPS Survey, references to the doctors, nurses, and other staff at the facility are grouped together for two reasons. First, grouping assessment of the health care personnel at a facility helps reduce the overall length of the survey so that similar questions are not repeated separately for doctors and nurses. Second, the questions under section I, II, III and IV (Before Your Procedure, Facility and Staff, Communications, and Recovery) include aspects of the patient's care that could be addressed by either the doctor or someone else at the facility. Combining these professionals under a single series of questions allows the patient to report that someone provided information and explained the process without having to recall the specific individual who gave the information. This is important because the OAS CAHPS Survey is intended to assess the patient's experience of care at the facility, including, but not separating out, all the staff that work at the facility.

For these reasons, we believe it is appropriate to ask these questions in a way that reflects the care provided by doctors, nurses, and other facility staff combined. We note that during the OAS CAHPS Survey field test conducted in 2014 and the mode experiment conducted in 2015, we did not receive any indications that the respondents had any difficulty answering these questions as they are currently written. The nonresponse, which is an indication of difficulty answering a question, was very low for the two questions that combine doctors and nurses (Question 7, which is about treating the patient with courtesy and respect and Question 8, which is about making sure the patient was a comfortable as possible). For the field test, less than 0.5 percent of the respondents did not respond to these questions while 99.5 percent were able to answer these questions. For the mode experiment just over 1 percent of the respondents did not respond to the questions while nearly 99 percent were able to answer them. These nonresponse rates were very similar to the questions that were about clerks and receptionists.

While there are no plans to add questions about new medications to the OAS CAHPS Survey at this time, we will take this recommendation into consideration during future updates to the survey.

Comment: One commenter requested clarification from CMS about why the OAS CAHPS Survey does not use same administration method as the HCAHPS Survey. One commenter recommended that CMS to align the outpatient version of patient's experience of care survey with the current inpatient version from a content, timeline and administration method standpoint, and requested CMS to review these requirements to prevent duplication of effort and provide a uniform process for patients. One commenter requested that CMS compare the OAS CAHPS Survey questions to the HCAHPS survey questions.

Response: Regarding survey content and questions, the OAS CAHPS survey was designed for the outpatient/ASC setting in order to more appropriately evaluate patient experience of care there. Therefore, the content should not be and is not the same as the HCAHPS survey. We refer readers to our discussion above regarding OAS CAHPS

[119] Home Health Care CAHPS Survey: ''Protocols and Guidelines Manual.'' Available at: *https://homehealthcahps.org/Portals/0/PandGManual.pdf*.

[120] Outpatient and Ambulatory Surgery CAHPS Survey: ''Survey Materials.'' Available at: *https://oascahps.org/Survey-Materials*.

survey development. Regarding administration method, the only difference between the HCAHPS and OAS CAHPS survey administration is that for the HCAHPS survey, hospitals are allowed to either self-administer or contract with a vendor. For the OAS CAHPS survey, on the other hand, hospitals must contract with a vendor. There is no option to self-administer. However, procedures related to vendors are aligned between both surveys. Therefore, we believe that processes streamline any duplication of efforts and processes for patients.

Comment: A few commenters expressed concerns that two existing CAHPS surveys, Clinician/Group CAHPS (CG–CAHPS) and the Surgical CAHPS (S–CAHPS), already capture the information that is being assessed in the OAS CAHPS Survey. One commenter recommended that the Hospital OQR Program to use the S–CAHPS survey for measurement of patient experience before, during, and after surgery.

Response: The CG–CAHPS survey [121] assesses patients' experiences with health care providers and staff in doctors' offices, and the focus of the S–CAHPS survey [122] is to obtain a patient's experience of care received specifically from a surgeon. Neither of those surveys focus on a patient's experience of care received from an HOPD or an ASC specifically, like the OAS CAHPS survey was designed to do. We do not believe the units of analyses are the same. However, we will take these suggestions into consideration for the future.

Comment: Some commenters urged CMS to make testing and revision of the Emergency Department Patient Experiences with Care (EDPEC) Survey a priority, and asserted that patient experiences in the ED setting require unique questions that are not necessarily reflected in the OAS CAHPS Survey. Another commenter recommended that CMS finalize the EDPEC Survey, and establish expectations for compliance across all hospitals first, including publishing results from the pilot, before requiring mandatory compliance with the OAS CAHPS. One commenter urged CMS to ensure the data collected from the EDPEC and OAS CAHPS Surveys accurately reflects the quality of care provided by physicians and facilities and accounts for the nuances and differences required when providing care in the emergency department.

Response: The Emergency Department Patient Experiences with Care (EDPEC) Survey is a survey tool that is currently under development at CMS that assesses patient experiences of care in the emergency department. We have made considerable investments in developing and testing the EDPEC Survey to measure experiences of patients (18 and older) with emergency department care specifically. The survey respondents include patients admitted to the hospital following their emergency department visit and those visiting the emergency department who are discharged to the community. For additional details regarding the EDPEC Survey, we refer readers to: *https://www.cms.gov/Research-Statistics-Data-and-Systems/Research/CAHPS/ed.html*. However, the EDPEC Survey cannot be finalized at this time, because it is still under development and would need to be reviewed by the MAP prior to CMS proposing the survey. We will take commenter's suggestion into consideration that the EDPAC accurately reflects the quality of care provided by physicians and facilities and accounts for the nuances and differences required when providing care in the emergency department.

In addition, to be abundantly clear, the OAS CAHPS Survey was developed to assess the quality of care provided to patients during select surgical outpatient procedures only. Therefore, the OAS CAHPS Survey should not be administered to ED patients. The EDPEC Survey can only be administered in the emergency department setting, and not in the hospital outpatient setting or ASC setting. Regarding the commenter's concern about the OAS CAHPS Survey accurately reflecting the quality of care provided by physicians and facilities, we believe the survey accurately does this and we point readers to our discussion above detailing the survey development process and TEP input. Regarding the comment about establishing expectations for compliance, we refer readers to our previous response above regarding the different categories of compliance for the OAS CAHPS Survey as well as the measure description in the proposed rule. We interpret commenter's request for CMS to publish results from the pilot to refer to the voluntary national implementation of the OAS CAHPS Survey, and we will publish results when available. However, we do not agree that we should delay implementation of this measure pending this publication, because the valuable information that this measure will provide to patients and hospitals outweighs waiting for these results.

Comment: One commenter requested clarification from CMS regarding the inclusion of pain management-related questions in the OAS CAHPS Survey. The commenter expressed concern that the pain management communication question may negatively influence patient perceptions about their overall care and, in turn, result in negative responses throughout the survey. Another commenter expressed concern that the OAS CAHPS Survey's questions regarding communication about pain management may not reflect the true perception patients have of their experience relative pain management, and recommended CMS continue to explore ways to ensure better measurement of patients' experience with pain management.

Response: The OAS CAHPS Survey pain management communication questions focus on the information provided to patients regarding pain management following discharge from a hospital outpatient department, not the hospital outpatient department's direct control or management of patients' pain. The hospital outpatient department is responsible for providing the patient with this information if there is a possibility that the patient might have pain as a result of the procedure. Communication about possible effects during recovery is important for patients. As discussed previously, the OAS CAHPS Survey underwent a rigorous survey development process, the results of which did not indicate any negative impact to overall survey responses resulting from the inclusion of these questions regarding pain management communication. In addition, we have no reason to believe that patients' responses to the pain management communication questions would not accurately reflect their experience with the facility. Therefore, we do not believe that the pain management communication question would negatively influence patient perceptions about their overall care, resulting in negative responses throughout the survey. However, as noted in the CY 2017 OPPS/ASC proposed rule (81 FR 45718), we will continue to evaluate the appropriateness and responsiveness of these questions to patient experience of care and public health concerns.

Comment: A number of commenters expressed concern regarding the OAS CAHPS Survey pain management communication question, ''Some ways to control pain include prescription medicine, over-the-counter pain relievers or ice packs. Did your doctor

[121] Clinician and Group Survey CAHPS. Available at: *http://www.pqrscahps.org/*.

[122] American College of Surgeons. ''S–CAHPS (Consumer Assessment of Healthcare Providers and Systems Surgical Care Survey).'' Available at: *https://www.facs.org/advocacy/quality/cahps*.

or anyone from the facility give you information about what to do if you had pain as a result of your procedure?'' One commenter recommended that CMS refine this question to be clear the survey is asking whether patients received pain management information that could be applied once they left the facility, and that the information could include, but is not limited to, information about pain management using appropriate medications. Another commenter recommended reorganizing the pain management methods listed in the first question to run from non-medication pain management to prescription pain medication treatment. Another commenter recommended that CMS expand this question to include other methods of pain management, such as physical therapy because the commenter believed using a more inclusive list of pain control methods would help to further combat the over prescription of opioids for pain management.

Some commenters also expressed concerns regarding the pain management communication control question, ''At any time after leaving the facility, did you have pain as a result of your procedure?'' Specifically, a few commenters requested that CMS revise the pain management communication control question to ask whether, at any time after leaving the facility, the patient experienced pain as a result of their procedure that they felt they could not manage based on the information they received from the facility or treating physician.

Response: We thank the commenters for their recommendations. As discussed previously, the OAS CAHPS Survey underwent a rigorous survey development process, the results of which indicated that patients understand these questions as presented, and that the questions were sufficiently developed for use in the survey.[123] As discussed previously, the OAS CAHPS Survey-based measures were reviewed by two 10-member TEPs comprised of experts on outpatient surgery, including clinicians, providers, patient advocates, and representatives from other stakeholder organizations. These TEPs provided guidance in the establishment of relevant topics for assessing patient experience of care at an outpatient facility, and commented on draft versions of the survey for cognitive and field testing.

The possible treatments for pain included in the survey reflect what is tested and reflected to work, and their order is not intended to reflect a preference for any single pain treatment method, only to provide examples of types of pain management a facility may discuss with a patient prior to discharge. The examples provided in this question are also not intended to be an exhaustive list, and we acknowledge that there are many methods for addressing pain following a procedure performed at a hospital outpatient department, including physical therapy. Because this is not an exhaustive list, we do not believe it is necessary to exclude, expand, or reorganize these questions at this time. However, we will take these suggestions, including reorganizing the pain management methods, into consideration for future iterations of the survey.

Comment: Two commenters expressed concerns that the pain management communication control question raises an unrealistic expectation regarding pain control, and may potentially encourage over prescription of opioids. These commenters therefore recommended removing the pain management communication control question from the OAS CAHPS Survey.

Response: We also note that Question 16 ''At any time after leaving the facility, did you have pain as a result of your procedure?'' is a control question; in other words, an answer of ''yes'' or of ''no'' would not affect provider scores on the OAS CAHPS survey questions. The scores are based on the previous Question 15, which asked if the doctor or anyone from the facility gave the patient information about what to do if the patient had pain as a result of the procedure. We will not publicly report the data from the control question that asks if the patient had pain as a result of the procedure, rather, that question is only used to determine if the previous question should be included in the score or not. For example, if the patient reported having had pain in Question 16, then the response to Question 15 would be included in the score that is reported for the hospital.

For example, the focus of Questions 15 and 16 is to determine whether a patient who is expected to experience pain as a result of a procedure was given information from the doctor or anyone from the facility about what to do about pain. If a patient experiences pain as a result of a procedure (Question 16), it is important that the patient was provided information as to what to do about the pain (Question 15). In these instances the response to Question 15 would be included in the score. However, for some procedures conducted in a hospital outpatient department (for example colonoscopies), there is little expectation that the patient will experience pain. In these instances, a doctor or anyone from the facility may not have given a patient information about what to do about pain because such information would not be relevant. In these latter instances, the response to Question 15 would not be included in the score unless the patient response is a top-box (that is, ''Yes, definitely'') response.

We do not believe a question asking whether patients experienced pain would have an undue influence on patients' responses to the OAS CAHPS Survey or warrant its removal from the OAS CAHPS Survey. As stated above, the OAS CAHPS Survey underwent a rigorous survey development process, the results of which did not indicate any negative impact to overall survey responses resulting from the inclusion of these questions regarding pain management communication. In addition, we have no reason to believe that patients' responses to the pain management communication questions would not accurately reflect their experience with the facility. Therefore, we do not believe that the pain management communication question would negatively influence patient perceptions about their overall care, resulting in negative responses throughout the survey.

Furthermore, as stated in the CY 2017 OPPS/ASC proposed rule at 81 FR 45717 through 45718, this control question will not affect scores on the OAS CAHPS survey. Rather, scores are based on the previous Question 15, which asks if the doctor or anyone from the facility gave the patient information about what to do if the patient had pain as a result of the procedure. However, we will review the data from the voluntary national implementation and continue to evaluate the appropriateness and responsiveness of these questions, particularly for any unintended consequences.

Comment: One commenter requested clarification about whether CMS intends to publicly report HOPD scores on the pain management communication control question.

Response: We interpret the comment to refer to Question 16. Question 16, ''At any time after leaving the facility, did you have pain as a result of your procedure?'' is a control question; in other words, an answer of ''yes'' or of ''no'' would not affect provider scores

[123] A description of the field test analysis of the survey questions was documented in the **Federal Register** notice (January 16, 2015; 80 FR 2430). *https://www.cms.gov/Regulations-and-Guidance/Legislation/PaperworkReductionActof1995/PRA-Listing-Items/CMS-10500.html.*

on the OAS CAHPS Survey questions. The scores are based on the previous Question 15, which asked if the doctor or anyone from the facility gave the patient information about what to do if the patient had pain as a result of the procedure.

Comment: One commenter recommended that CMS remove the questions on the OAS CAHPS Survey asking patients whether they experienced pain, nausea, or bleeding following a procedure because the commenter believes this information is not useful to facilities in quality improvement activities, as these are all risks associated with surgery.

Response: Question 17 (''Before you left the facility, did your doctor or anyone from the facility give you information about what to do if you had nausea or vomiting?'') and Question 18 (''At any time after leaving the facility, did you have nausea or vomiting as a result of either your procedure or the anesthesia?'') are intended to assess the information provided to patients regarding what to expect following a surgery/procedure. We believe it is the facility's responsibility to ensure that the patient is aware of the potential side effect of their treatment, and, therefore, believe these questions are indicative of quality of care. As above, we note that Question 18 is a control question, so an affirmative or negative response would not be included in the provider scores on the OAS CAHPS Survey, but rather is used to determine if the provider should have given guidance on how to handle nausea or vomiting (Question 17). The information will be useful to facilities because they will be able to ensure that the information that patients need during recovery is adequately addressed by the facility staff. These questions are not reporting whether the patients experienced pain, nausea, vomiting, bleeding or signs of infection; the questions are reporting if the patients were informed what to do if they had these outcomes.

For example, the focus of Questions 17 and 18 is to determine whether a patient who might likely experience nausea or vomiting as a result of a procedure was given information from the doctor or anyone from the facility about what to do to manage these outcomes. If a patient experiences these outcomes as a result of a procedure, it is important that the patient was provided information on how to manage these outcomes. In these instances, the response to Question 17 would be included in the score. However, for some procedures conducted in a hospital (for example laser surgeries), there is little expectation of the patient experiencing nausea or vomiting and in these instances a doctor or anyone from the facility may not have given a patient information on how to manage these outcomes as such information would not be relevant. In these latter instances, the responses to Question 17 would not be included in the score unless the patient response is a top-box (that is, ''Yes, definitely'') response.

Furthermore, as stated in the CY 2017 OPPS/ASC proposed rule (81 FR 45717 through 45718), this control question will not affect scores on the OAS CAHPS survey. Rather, scores are based on the previous Question 17, which asks if the doctor or anyone from the facility gave information about what to do if the patient had nausea or vomiting. However, we will review the data from the voluntary national implementation and continue to evaluate the appropriateness and responsiveness of these questions, particularly for any unintended consequences.

Comment: One commenter urged CMS to examine the necessity and utility of the OAS CAHPS measures and adjust for all factors (for example, limited English proficiency, low health literacy) that could influence how patients respond to the survey but are beyond the control of the hospital and not directly related to hospital performance.

Response: In order to achieve the goal of fair comparisons across all hospitals, the OAS CAHPS Survey-based measures risk-adjust for factors that are not directly related to facility performance. The measures are risk-adjusted for patient case-mix, which proved to be significant predictors: age; education; overall health status; overall mental health status; type of surgical procedure; and English proficiency. Health literacy is not one of the patient characteristics used because assessing a patient's health literacy would add significant burden to the survey. The self-reported education is used as a surrogate and only requires one additional question. We refer readers to *http://www.ahrq.gov/professionals/quality-patient-safety/quality-resources/tools/perfmeasguide/perfmeaspt2a.html* for more details about the risk-adjustment.

Comment: One commenter recommended the OAS CAHPS Survey be administered only to patients receiving surgeries and certain other procedures in the HOPD setting.

Response: We agree with the commenter and refer readers to section XIII.B.5.c.(5) of this final rule with comment period (Cohort) in the measure description above as well as in the CY 2017 OPPS/ASC proposed rule (81 FR 45719). As we stated there, a criterion to be an eligible patient is one ''who had an outpatient surgery or procedure in a hospital, as defined in the OAS CAHPS Survey Protocols and Guidelines Manual (*https://oascahps.org/Survey-Materials*).'' The OAS CAHPS Survey was specifically developed to assess patients' experience of care for selected outpatient surgical procedures. The surgeries and procedures eligible for the OAS CAHPS Survey measures fall within the Category I CPT–4 range Codes for Surgery (for example, CPT codes between 10021–69990) or one of the following Category II G-codes: G0104; G0105; G0121; or G0260. All other CPT codes are considered ineligible for the OAS CAHPS Survey-based measures. We refer readers to the OAS CAHPS Protocols and Guidelines Manual for more information, which is available at: *https://oascahps.org/Survey-Materials*.

Comment: One commenter expressed concerns that additional review and consideration is needed regarding the CPT codes involving the insertion/use of Foley catheters, 51701 and 51702.

Response: For the OAS CAHPS Survey, the primary criterion for determining eligible surgeries and procedures is the CPT code.[124] OAS CAHPS-eligible surgeries and procedures fall within the range Category I Codes for Surgery (that is, CPT codes between 10021 and 69990) or one of the following Category II G-codes: G0104; G0105; G0121; or G0260. Among the 60,000 surgeries and procedures documented in the Codes for Surgery range, there are some relatively minor procedures that fall within the range that are considered ineligible for OAS CAHPS. The OAS CAHPS protocol[125] documents the ineligible CPT codes that have been excluded, but because the codes are maintained by the American Medical Association and are subject to periodic updates, the list of exclusions must be open for expansion. CMS protocols for the OAS CAHPS Survey[126] allow survey vendors to work with hospital outpatient departments to submit for consideration other specific CPT codes to be considered for exclusion. As additional exclusions are approved, the survey protocols are updated and announced. The two CPT codes in question (51701 and 51702) are currently under consideration by CMS for exclusion.

Comment: One commenter recommended that CMS delay public

[124] CPT only copyright 2015 American Medical Association. All rights reserved.

[125] Outpatient and Ambulatory Surgery CAHPS Survey: ''Protocols and Guidelines Manual.'' Available at: *https://oascahps.org/Survey-Materials*.

[126] *https://oascahps.org/Survey-Materials*.

reporting of hospital outpatient department measure rates on the OAS CAHPS Survey-based measures for at least one year to allow hospitals to become familiar with the measures and survey administration.

Response: As stated in the CY 2017 OPPS/ASC proposed rule (81 FR 45720), this measure was proposed for the CY 2020 payment determination and subsequent years. Therefore, hospitals would not be required to submit OAS CAHPS Survey data until CY 2018. We refer readers to section XII.D.4. of this final rule with comment period for data submission requirements. This gives hospitals an additional year to become familiar with both the OAS CAHPS Survey and its administration requirements, as well as to contract with a third-party vendor to administer the survey. We refer hospitals to the list of CMS-approved survey vendors available on the OAS CAHPS Web site (*https://oascahps.org/General-Information/Approved-Survey-Vendors*) and encourage hospitals to compare prices across vendors, as they may vary. We believe this additional year is sufficient time for hospitals to become familiar with the measures and survey administration before it is a requirement of the Hospital OQR Program and before measures data is publicly reported. Furthermore, we encourage hospitals to participate in the voluntary national implementation of the OAS CAHPS Survey to gain experience. More information can be found at: *https://oascahps.org/*.

Moreover, as stated in the CY 2017 OPPS/ASC proposed rule (81 FR 45720), we will propose a format and timing for public reporting of OAS CAHPS Survey data in future rulemaking prior to implementation of the measures. Because CY 2016 is the first year of voluntary national implementation for the OAS CAHPS Survey, and we believe using data from this voluntary national implementation will help inform the displays for public reporting of OAS CAHPS Survey data for the Hospital OQR Program, we did not propose a format or timing for public reporting of OAS CAHPS Survey data in the proposed rule.

After consideration of the public comments we received, we are finalizing the adoption of the OP–37a–e: Outpatient and Ambulatory Surgery Consumer Assessment of Healthcare Providers and Systems (OAS CAHPS) Survey Measures for the CY 2020 payment determination and subsequent years as proposed with a clarification that hospitals that anticipate receiving more than 300 surveys are required to either: (1) Randomly sample their eligible patient population, or (2) survey their entire OAS CAHPS eligible patient population. We note that these measures are also being finalized in the ASCQR Program and refer readers to section XIV.B.4.c of this final rule with comment period for more details.

d. Summary of Previously Adopted and Newly Adopted Hospital OQR Program Measures for the CY 2020 Payment Determinations and Subsequent Years

The table below outlines the finalized Hospital OQR Program measure set for the CY 2020 payment determination and subsequent years, and includes both previously adopted measures and measures newly adopted in this final rule with comment period.

PREVIOUSLY FINALIZED AND NEWLY FINALIZED HOSPITAL OQR PROGRAM MEASURE SET FOR THE CY 2020 PAYMENT DETERMINATION AND SUBSEQUENT YEARS

NQF No.	Measure name
0287	OP–1: Median Time to Fibrinolysis.†
0288	OP–2: Fibrinolytic Therapy Received Within 30 Minutes of ED Arrival.
0290	OP–3: Median Time to Transfer to Another Facility for Acute Coronary Intervention.
0286	OP–4: Aspirin at Arrival.†
0289	OP–5: Median Time to ECG.†
0514	OP–8: MRI Lumbar Spine for Low Back Pain.
N/A	OP–9: Mammography Follow-up Rates.
N/A	OP–10: Abdomen CT—Use of Contrast Material.
0513	OP–11: Thorax CT—Use of Contrast Material.
N/A	OP–12: The Ability for Providers with HIT to Receive Laboratory Data Electronically Directly into their ONC-Certified EHR System as Discrete Searchable Data.
0669	OP–13: Cardiac Imaging for Preoperative Risk Assessment for Non-Cardiac, Low-Risk Surgery.
N/A	OP–14: Simultaneous Use of Brain Computed Tomography (CT) and Sinus Computed Tomography (CT).
0491	OP–17: Tracking Clinical Results between Visits.†
0496	OP–18: Median Time from ED Arrival to ED Departure for Discharged ED Patients.
N/A	OP–20: Door to Diagnostic Evaluation by a Qualified Medical Professional.
0662	OP–21: Median Time to Pain Management for Long Bone Fracture.
0499	OP–22: Left Without Being Seen.†
0661	OP–23: Head CT or MRI Scan Results for Acute Ischemic Stroke or Hemorrhagic Stroke who Received Head CT or MRI Scan Interpretation Within 45 minutes of ED Arrival.
N/A	OP–25: Safe Surgery Checklist Use.
N/A	OP–26: Hospital Outpatient Volume on Selected Outpatient Surgical Procedures.*
0431	OP–27: Influenza Vaccination Coverage among Healthcare Personnel.
0658	OP–29: Appropriate Follow-Up Interval for Normal Colonoscopy in Average Risk Patients.**
0659	OP–30: Colonoscopy Interval for Patients with a History of Adenomatous Polyps—Avoidance of Inappropriate Use.***
1536	OP–31: Cataracts: Improvement in Patient's Visual Function within 90 Days Following Cataract Surgery.***
2539	OP–32: Facility 7-Day Risk-Standardized Hospital Visit Rate after Outpatient Colonoscopy.
1822	OP–33: External Beam Radiotherapy for Bone Metastases.
N/A	OP–35: Admissions and Emergency Department (ED) Visits for Patients Receiving Outpatient Chemotherapy.****
2687	OP–36: Hospital Visits after Hospital Outpatient Surgery.****
N/A	OP–37a: OAS CAHPS—About Facilities and Staff.****
N/A	OP–37b: OAS CAHPS—Communication About Procedure.****
N/A	OP–37c: OAS CAHPS—Preparation for Discharge and Recovery.****
N/A	OP–37d: OAS CAHPS—Overall Rating of Facility.****
N/A	OP–37e: OAS CAHPS—Recommendation of Facility.****

† We note that NQF endorsement for this measure was removed.

* OP–26: Procedure categories and corresponding HCPCS codes are located at: *https://www.qualitynet.org/dcs/ContentServer?c=Page&pagename=QnetPublic%2FPage%2FQnetTier3&cid=1196289981244.*

** We note that measure name was revised to reflect NQF title.

*** Measure voluntarily collected as set forth in section XIII.D.3.b. of the CY 2015 OPPS/ASC final rule with comment period (79 FR 66946 through 66947).

**** New measure finalized for the CY 2020 payment determination and subsequent years.

6. Hospital OQR Program Measures and Topics for Future Consideration

In the CY 2017 OPPS/ASC proposed rule (81 FR 45721 through 45722), we sought public comment on future measure topics generally, electronic clinical quality (eCQM) measures implementation, and specifically the future measure concept, Safe Use of Opioids-Concurrent Prescribing eCQM, for future consideration in the Hospital OQR Program. These are discussed in detail below.

a. Future Measure Topics

We seek to develop a comprehensive set of quality measures to be available for widespread use for informed decision-making and quality improvement in the hospital outpatient setting. The current measure set for the Hospital OQR Program includes measures that assess process of care, imaging efficiency patterns, care transitions, ED throughput efficiency, the use of Health Information Technology (health IT), care coordination, patient safety, and volume. Through future rulemaking, we intend to propose new measures that help us further our goal of achieving better health care and improved health for Medicare beneficiaries who receive health care in hospital outpatient settings, while aligning quality measures across the Medicare program.

We are moving towards the use of outcome measures and away from the use of clinical process measures across the Medicare program. We invited public comments on possible measure topics for future consideration in the Hospital OQR Program. We specifically requested comment on any outcome measures that would be useful to add to the Hospital OQR Program as well as any clinical process measures that should be eliminated from the Hospital OQR Program.

Comment: One commenter requested that, in selecting future measures and topics, CMS streamline, align, focus, and collaborate on measures that matter most for improving patient care. The commenter also expressed its support for CMS' focus on outcome measures.

Response: We thank the commenter for its suggestion. As discussed in the CY 2012 OPPS/ASC final rule with comment period (76 FR 74458 through 74460), in general, when selecting measures for the Hospital OQR Program, we take into account several considerations and goals. These include: (a) Expanding the types of measures beyond process of care measures to include an increased number of outcome measures, efficiency measures, and patients' experience-of-care measures; (b) expanding the scope of hospital services to which the measures apply; (c) considering the burden on hospitals in collecting chart-abstracted data; (d) harmonizing the measures used in the Hospital OQR Program with other CMS quality programs to align incentives and promote coordinated efforts to improve quality; (e) seeking to use measures based on alternative sources of data that do not require chart abstraction or that utilize data already being reported by many hospitals, such as data that hospitals report to clinical data registries, or all-payer claims data bases; and (f) weighing the relevance and utility of the measures compared to the burden on hospitals in submitting data under the Hospital OQR Program. We also stated that we assign priority to quality measures that assess performance on: (a) Conditions that result in the greatest mortality and morbidity in the Medicare population; (b) conditions that are high volume and high cost for the Medicare program; and (c) conditions for which wide cost and treatment variations have been reported, despite established clinical guidelines (76 FR 74458 through 74459). To the extent possible, we seek to streamline reporting, align with other hospital quality reporting and performance programs, and focus on measures that have high impact and support national priorities as reflected in the NQS and the CMS Quality Strategy. We thank the commenter for its support of our move toward adopting more outcome-based measures in the future.

Comment: Several commenters recommended increasing the number of immunization measures, specifically, adult immunization measures, in the program, including: (1) A pneumococcal immunization measure, such as NQF #0043; (2) an influenza immunization measure, such as NQF #0041; (3) an HPV vaccination catch-up measure for females ages 19–26 years and for males 19–21 years; (4) a measure for Tdap/pertussis-containing vaccine for ages 19+ years; (5) a measure for Zoster vaccination for ages 60–64 years; and (6) a measure for Zoster vaccination for ages 65+ years. Commenters noted that several of these measures are already required by the PQRS Program. One commenter recommended that CMS address all Advisory Committee on Immunization Practices (ACIP)-recommended vaccines for adults. Other commenters also strongly supported maintaining the Influenza Vaccination Coverage among Healthcare Personnel measure in the Hospital OQR Program.

Response: We acknowledge commenters' suggestions that we should include additional immunization performance measures in the Hospital OQR Program to help ensure vaccines are routinely offered and administered to patients in the hospital outpatient setting. We also refer readers to the CY 2016 PFS final rule with comment period (80 FR 71216 through 71259) for measures currently included in the PQRS Program. We will take these suggestions into consideration for future rulemaking. We thank commenters for supporting the continued inclusion of OP–27: Influenza Vaccination Coverage among Healthcare Personnel.

b. Electronic Clinical Quality Measures

We are working toward incorporating electronic clinical quality measures (eCQMs) in the Hospital OQR Program in the future. We believe automated electronic extraction and reporting of clinical quality data, potentially including measure results calculated automatically by appropriately certified health IT, would significantly reduce the administrative burden on hospitals under the Hospital OQR Program. We recognize that considerable work needs to be done by measure stewards and developers to make this possible with respect to the clinical quality measures targeted for electronic specifications (e-specifications) for the outpatient setting. This includes completing e-specifications for measures, pilot testing, reliability and validity testing, submitting for endorsement of e-specified version (if applicable) and implementing such specifications into certified EHR technology to capture and calculate the results, and implementing the systems. We continue to work to ensure that eCQMs will be smoothly incorporated into the Hospital OQR Program.

We invited public comments on future implementation of eCQMs as well

as specific future eCQMs for the Hospital OQR Program.

Comment: Some commenters supported CMS' goal to incorporate electronic clinical quality measures (eCQMs) in the Hospital OQR Program in the future. One commenter asserted that eCQMs will help quantify healthcare processes and outcomes that are associated with the ability to provide high quality health care, and the development of eCQMs increases clinical data availability and improves measure quality and outcomes. One commenter agreed with the development of outpatient eCQMs because it would better align the outpatient and inpatient hospital quality reporting programs; this commenter asserted that the outpatient areas lag behind inpatient areas in the implementation of electronic health records. Another commenter encouraged CMS to make the transition to eCQM reporting a high priority to align with the Hospital IQR Program and The Joint Commission's ORYX® Reporting Program.

Response: We thank the commenters for their support of incorporating eCQMs in the Hospital OQR Program in the future. We are evaluating eCQM implementation in the Hospital IQR Program, as well as other Medicare payment programs, and will take lessons learned in that program into consideration when crafting policy for the Hospital OQR Program. Furthermore, we consider the alignment with the Hospital IQR Program and the Joint Commission's ORYX® Reporting Program a high priority for our transition to eCQM reporting in the Hospital OQR Program, and we will take this recommendation into consideration. For additional information regarding the Joint Commission's ORYX® Reporting Program, we refer readers to: *https://www.jointcommission.org/facts_about_oryx_for_hospitals/*. We also acknowledge the commenter's concerns that outpatient areas lag behind inpatient areas in the implementation of electronic health records, and we will consider this issue as we develop eCQMs for the Hospital OQR Program.

Comment: One commenter recommended a gradual start with one measure, and recommended the Hospital OQR Program start with the ED–3 measure (Median Time from ED Arrival to ED Departure for Discharge ED Patients). The commenter expressed concerns that CMS did not take advantage of eCQM ED–3 measure to begin accepting Quality Reporting Document Architecture (QRDA–1) files for CY 2017. The commenter strongly recommended CMS show continued support for ED–3 and add it to the list of future eCQM requirements.

Response: We acknowledge the commenter's concern regarding gradually including eCQMs in the Hospital OQR Program, beginning with the inclusion of the ED–3: Median Time from ED Arrival to ED Departure for Discharge ED Patients measure. In the CY 2011 OPPS/ASC final rule with comment period (75 FR 72074), we finalized OP–18: Median Time from ED Arrival to ED Departure for Discharged ED Patients (NQF #0496), the only measure in our current measure set which is currently specified as an eCQM; it is e-specified as ED–3. The e-specification for this measure is available at: *http://www.cms.gov/Regulations-and-Guidance/Legislation/EHRIncentivePrograms/Downloads/2014_eCQM_Specs_for_EH.zip* in the folder entitled: EH_CMS32v2_NQF0496_ED3_MedianTime. The ED-e measure could not be proposed or adopted previously due to the statutory limitations of the Hospital OQR Program. This e-measure would be required to undergo the prerulemaking process in accordance with section 1890A of the Act. This e-measure is currently on the 2016 MUC List, and we are considering it for future use in the program, because we believe it is important to encourage providers to submit this measure electronically.

Comment: A few commenters did not support CMS' goal to incorporate eCQMs in the Hospital OQR Program. One commenter asserted that requiring eCQM reporting in the quality programs would create a duplicative penalty for hospitals unable to meet Meaningful Use requirements. This commenter further argued there has not been sufficient development of eCQMs for the Hospital OQR Program. Another commenter expressed concerns that providers will not have sufficient time and information systems and technology resources to be fully prepared for reporting eCQMs. This commenter requested more flexibility from CMS, and requested decreasing required measures until the specifications have been tested and validated. This commenter also requested that data from eCQMs not be published in *Hospital Compare* until benchmarks for each measure are available.

Response: We disagree that any future requirements for electronic reporting in the Hospital OQR Program would duplicate penalties. Incorporating eCQMs is part of an effort to align various programs, including the Hospital IQR Program and Medicare and Medicaid EHR Incentive Programs, in order to reduce overall burden. Furthermore, we believe that it is appropriate to consider incorporating eCQMs because measures available now and those being developed for the future are increasingly based on electronic standards (80 FR 49696). In addition, as described in the FY 2017 IPPS/LTCH PPS final rule (81 FR 57156), we have observed the successes of hospitals meeting the meaningful use requirements and our data show that 95 percent of hospitals already attest to successful eCQM reporting under the EHR Incentive Program.

We acknowledge the commenter's concerns that providers will not have sufficient time and information systems and technology resources to be fully prepared for reporting eCQMs. We anticipate that as EHR technology evolves and more health IT infrastructure is operational, in cooperation with the efforts of the ONC Health IT Certification Program, data elements and information systems requirements will become more standardized. Reliable, accurate data and electronic reporting are all important priorities to us. We believe that, with the advancement of technology and the use of electronic measures, even more precise, accurate, and reliable data will be captured for analysis. We also acknowledge commenters' concerns and recommendations regarding the use of eCQMs in the Hospital OQR Program, such as decreasing required measures until the specifications have been tested and validated and delaying public reporting on Hospital Compare until benchmarks for each measure are available. In addition, we understand the commenter's concerns that there has not been sufficient development of eCQMs for the Hospital OQR Program. We aim to ease the transition to reporting of electronic clinical quality measures, but any policies regarding the specific timelines and requirements related to data submission would be proposed in future rulemaking. We will consider these comments and work with stakeholders to address their concerns evaluating any eCQMs we propose to adopt in future rulemaking.

Comment: One commenter recommended that, for anesthesia measures, eCQMs should communicate across the continuum of patient care, and disparate information systems should interface between offices, clinics, hospitals, and pharmacy platforms to communicate across the patient's experience to increase patient safety, improve outcomes and decrease cost of care. This commenter recommended that these anesthesia

measures should include standardized taxonomy and fields and require providers to use these measures across various platforms to optimize communication of care and interoperability. This commenter also asserted that free text fields are more complex and require dedicated staff to abstract charts for quality reporting instead of electronic capture from the EHR of specific data fields. This commenter therefore recommended CMS make data available to all interested parties to identify trends and opportunities for improvement as data is reported.

Response: We appreciate the commenter's recommendations regarding the inclusion of e-specified anesthesia-related measures in the Hospital OQR Program. Furthermore, we acknowledge concerns about disparate information systems and conflicting data elements resulting in issues of comparability, completeness, and accuracy of eCQM data as well as concerns that e-specified anesthesia measures should include standardized taxonomy and fields, and require providers to use these measures across various platforms to optimize communication of care and interoperability. In the future, if we consider adopting e-specified measures related to patients undergoing anesthesia, we will be mindful of these concerns. Furthermore, regarding making data available to all interested parties to identify trends and opportunities for improvement as data is reported, we will consider the feasibility of this within the constraints of the HIPAA Privacy and Security Rules and other data privacy laws.

Comment: One commenter recommended the following existing Hospital OQR Program measures be slated for future eCQM development: OP–1: Median Time to Fibrinolysis; OP–2: Fibrinolytic Therapy Received Within 30 Minutes of ED Arrival; OP–3: Median Time to Transfer to Another Facility for Acute Coronary Intervention; OP–5: Median Time to ECG; OP–20: Door to Diagnostic Evaluation by a Qualified Medical Professional; and OP–21: Median Time to Pain Management for Long Bone Fracture.

Response: We will share these suggested existing Hospital OQR Program measures with the measure developers for consideration as future eCQMs and will take these comments under consideration as we develop future eCQM policy for the Hospital OQR Program.

Comment: One commenter requested that, when referencing providers within eCQMs, CMS use provider-neutral language consistent with the language used by CMS that supports inter-professional team care delivery and outcomes.

Response: We interpret provider-neutral language as language that includes eligible professionals. As defined under section 1861(r) of the Act and finalized in the EHR Incentive Programs Stage 1 final rule (75 FR 44442), an eligible professional is a doctor of medicine or osteopathy; a doctor of dental surgery or dental medicine; a doctor of podiatric medicine; a doctor of optometry; or a chiropractor), nurse practitioners, physician assistants, and other health care practitioners as health care providers. We strive to use language that eliminates bias and minimizes assumptions in their writing. In addition, hospital measures are not generally reported on the individual-level (for example, by each physician); instead they are reported by CCN (for example, hospital-wide) in order to encourage coordinated care delivery.

Comment: One commenter expressed concerns that the size and scope of CMS testing and validation for eCQMs may be too narrow for an accurate review.

Response: We thank the commenter for sharing its suggestions and concerns regarding the testing and validation for eCQMs for the future measure concept. As we have not yet developed policy for Hospital OQR Program eCQM validation, we believe the commenter is referring to the Hospital IQR Program Validation Pilot for eCQMs that was finalized in the FY 2015 IPPS/LTCH PPS final rule (79 FR 50269 through 50273). We refer readers to FY 2015 IPPS/LTCH PPS final rule (79 FR 50269 through 50273) for our discussions of size and scope of Hospital IQR Program eCQM Validation Pilot. Additional details about the Hospital IQR Program 2015 eCQM Validation Pilot are available at: *https://www.qualitynet.org/dcs/ContentServer?c=Page&pagename=QnetPublic%2FPage%2FQnetTier3&cid=1140537256076*. We also refer readers to the FY 2017 IPPS/LTCH PPS final rule (81 FR 57173 through 57181), for a summary of results from the pilot test and our most recent eCQM validation policies in the Hospital IQR Program. We will consider these comments as we develop eCQM policy for the Hospital OQR Program.

c. Possible Future eCQM: Safe Use of Opioids-Concurrent Prescribing

Unintentional opioid overdose fatalities have become an epidemic in the last 20 years and a major public health concern in the United States.[127] HHS has made addressing opioid misuse, dependence, and overdose a priority. HHS is implementing evidence-based initiatives focused on informing prescribing practices to combat misuse and overdose deaths.[128] Several other organizations, including the Centers for Disease Control and Prevention (CDC), the Federal Interagency Workgroup for Opioid Adverse Drug Events, the National Action Plan for Adverse Drug Event Prevention, and the Substance Abuse and Mental Health Services Administration, have joined the effort. Prescribing opioids to patients already using an opioid or patients using benzodiazepines (sedation-inducing central nervous system depressant) increases their risk of respiratory depression and death.[129] These prescribing scenarios can occur in any setting including: Inpatient hospital; outpatient hospital practices; outpatient emergency departments; and other urgent care settings. With a limited evaluation focused on the patient's acute condition, the clinician in these settings may not know the patient's full medical history.[130] An analysis of national prescribing patterns shows that more than half of patients who received an opioid prescription in 2009 had filled another opioid prescription within the previous 30 days.[131] Studies of multiple claims and prescription databases have shown that between 5 and 15 percent of patients receive overlapping opioid prescriptions and 5 to 20 percent of patients receive

[127] Rudd, R., Aleshire, N., Zibbell, J., et al. ''Increases in Drug and Opioid Overdose Deaths—United States, 2000–2014''. MMWR, Jan 2016. 64(50);1378–82. Available at: *http://www.cdc.gov/mmwr/preview/mmwrhtml/mm6450a3.htm*.

[128] United States Department of Health and Human Services ''ASPE Issue Brief: Opioid Abuse in the U.S. and HHS Actions to Address Opioid-Drug Related Overdoses and Deaths''. March 2015. Available at: *https://aspe.hhs.gov/sites/default/files/pdf/107956/ib_OpioidInitiative.pdf*.

[129] Dowell, D., Haegerich, T., Chou, R. ''CDC Guideline for Prescribing Opioids for Chronic Pain—United States, 2016''. MMWR Recomm Rep 2016;65. Available at: *http://www.cdc.gov/media/dpk/2016/dpk-opioid-prescription-guidelines.html*.

[130] Governale, Laura. ''Outpatient Prescription Opioid Utilization in the U.S., Years 2000–2009.'' 2010. Drug Utilization Data Analysis Team Leader, Division of Epidemiology, Office of Surveillance and Epidemiology. Presentation for U.S. Food and Drug Administration. Available at: *http://www.fda.gov/downloads/AdvisoryCommittees/CommittesMeetingMaterials/Drugs/AnestheticAndLifeSupportDrugsAdvisoryCommittee/UCM220950.pdf*.

[131] National Institute on Drug Abuse. ''Analysis of opioid prescription practices finds areas of concern''. April 2011. Available at: *https://www.drugabuse.gov/news-events/news-releases/2011/04/analysis-opioid-prescription-practices-finds-areas-concern*.

overlapping opioid and benzodiazepine prescriptions across all settings.[132 133 134]

The 2016 *CDC Guideline for Prescribing Opioids for Chronic Pain*[135] recommends that providers avoid concurrently prescribing opioids and benzodiazepines because rates of fatal overdose are 10 times higher in patients who are co-dispensed opioid analgesics and benzodiazepines than opioids alone[136] and concurrent use of benzodiazepines with opioids was prevalent in 31 percent to 51 percent of fatal overdoses.[137] ED visit rates involving both opioid analgesics and benzodiazepines increased from 11.0 in 2004 to 34.2 per 100,000 population in 2011.[138] Opioid overdose events resulting in ED use can cost the United States approximately $800 million per year.[139]

To address concerns associated with overlapping or concurrent prescribing of opioids or opioids and benzodiazepines, we are in early development of a new electronic clinical quality measure for the Hospital IQR and OQR Programs that would capture the proportion of patients 18 years of age and older who have an active prescription for an opioid and have an additional opioid or benzodiazepine prescribed to them during the qualifying care encounter. This measure is being designed to reduce preventable deaths as well as reduce costs associated with the treatment of opioid-related ED use by encouraging providers to identify patients at high risk for overdose due to respiratory depression or other adverse drug events.

We requested public comments on this future measure concept specifically for the Hospital OQR Program setting.

In addition, in order to solicit further public comment from a wide variety of stakeholders, we will also post this measure concept to the CMS Measures Management System (MMS) Call for Public Comment Web page, available at: *https://www.cms.gov/Medicare/Quality-Initiatives-Patient-Assessment-Instruments/MMS/CallforPublicComment.html*. Readers can subscribe to receive updates through the MMS Listserv at: *https://www.cms.gov/Medicare/Quality-Initiatives-Patient-Assessment-Instruments/MMS/MMS-Listserv.html*.

Comment: Several commenters supported the future eCQM ''Safe Use of Opioids-Concurrent Prescribing'' measure concept currently under development for the Hospital OQR Program. One commenter specifically supported the development of measures to help address the opioid epidemic. Another commenter supported the future measure concept because the large number of people receiving health care who take multiple medications, and the resulting complexity of managing those medications, makes medication reconciliation an important safety process. This commenter further asserted that effective medication reconciliation programs require a complete understanding of what the patient was prescribed and what medications the patient is actually taking, and is particularly important when prescribing opioids.

Response: We thank commenters for their support of the development of a future measure addressing safe use of opioids and concurrent prescribing. We note that the measure is still under development. However, we will consider these recommendations in our ongoing measure development activities.

Comment: Several commenters disagreed with the scope and intention of the future opioid measure concept and asserted that measures that simply assess the proportion of adults with a prescription are inadequate because they do not consider if opioid prescriptions are appropriate. One commenter asserted that clinicians should be able to use their clinical judgment and should not be punished if the clinicians sincerely believed that prescribing both classes of medication together is more beneficial than prescribing only one class of medication alone.

Response: We thank the commenters for sharing their suggestions and concerns about the scope and intention of the future opioid measure. We understand commenters' concerns about measures that assess the proportion of adults with a prescription are inadequate, and will consider this issue while we develop this future measure. During initial development of this measure, experts were interviewed and recognized that there will be clinically necessary instances where a patient with an active opioid or benzodiazepine may require a short-term prescription for a second medication. However, the 2016 *CDC Guideline for Prescribing Opioids for Chronic Pain*[140] recommends that providers avoid concurrently prescribing opioids and benzodiazepines because rates of fatal overdose are 10 times higher in patients who are co-dispensed opioid analgesics and benzodiazepines than opioids alone[141] and concurrent use of benzodiazepines with opioids was prevalent in 31 percent to 51 percent of fatal overdoses.[142] We do not expect sites to have numerators of zero, but we do intend the measure to alert providers to the risks of concurrent opioid or opioid and benzodiazepine therapy. We will continue to engage with stakeholders, including clinicians, as we develop this future measure. We note that the measure is still under development, and we will consider these recommendations in our ongoing measure development and testing activities.

Comment: Some commenters expressed concerns that the measure concept may introduce unintended consequences such as under-treatment and placing undue accountability on acute settings for long-term pain management; patients on small doses of a benzodiazepine for a chronic problem (anxiety, insomnia) might not be able to be given opioids if they have an acute injury or fracture; and creating withdrawal in a patient who has been on long standing opioids with

[132] Liu, Y., Logan, J., Paulozzi, L., et al. ''Potential Misuse and Inappropriate Prescription Practices Involving Opioid Analgesics''. Am J Manag Care. 2013 Aug;19(8):648–65.

[133] Mack, K., Zhang, K., et al. ''Prescription Practices involving Opioid Analgesics among Americans with Medicaid, 2010,'' J Health Care Poor Underserved. 2015 Feb; 26(1): 182–198. Available at: *http://www.ncbi.nlm.nih.gov/pmc/articles/PMC4365785/*.

[134] Jena, A., et al. ''Opioid prescribing by multiple providers in Medicare: retrospective observational study of insurance claims,'' BMJ 2014; 348:g1393 doi: 10.1136/bmj.g1393. Available at: *http://www.bmj.com/content/348/bmj.g1393*.

[135] Dowell D, Haegerich TM, Chou R. CDC Guideline for Prescribing Opioids for Chronic Pain—United States, 2016. MMWR Recomm Rep 2016;65:1–49. DOI: *http://dx.doi.org/10.15585/mmwr.rr6501e1*.

[136] Dasgupta, N., et al. ''Cohort Study of the Impact of High-dose Opioid Analgesics on Overdose Mortality,'' Pain Medicine, Wiley Periodicals, Inc., 2015.

[137] Dowell, D., Haegerich, T., Chou, R. ''CDC Guideline for Prescribing Opioids for Chronic Pain—United States, 2016.'' MMWR Recomm Rep 2016;65. Available at: *http://www.cdc.gov/media/dpk/2016/dpk-opioid-prescription-guidelines.html*.

[138] Jones, CM., McAninch, JK. ''Emergency Department Visits and Overdose Deaths From Combined Use of Opioids and Benzodiazepines''. Am J Prev Med. 2015 Oct;49(4):493–501. doi: 10.1016/j.amepre.2015.03.040. Epub 2015 Jul 3. Available at: *http://www.ncbi.nlm.nih.gov/pubmed/26143953*.

[139] Inocencio, TJ., et al. ''The economic burden of opioid-related poisoning in the United States,'' October 2013. Available at: *http://www.ncbi.nlm.nih.gov/pubmed/23841538*.

[140] Dowell D, Haegerich TM, Chou R. CDC Guideline for Prescribing Opioids for Chronic Pain—United States, 2016. MMWR Recomm Rep 2016;65:1–49. DOI: *http://dx.doi.org/10.15585/mmwr.rr6501e1*.

[141] Dasgupta, N., et al. ''Cohort Study of the Impact of High-dose Opioid Analgesics on Overdose Mortality,'' Pain Medicine, Wiley Periodicals, Inc., 2015.

[142] Dowell, D., Haegerich, T., Chou, R. ''CDC Guideline for Prescribing Opioids for Chronic Pain—United States, 2016.'' MMWR Recomm Rep 2016;65. Available at: *http://www.cdc.gov/media/dpk/2016/dpk-opioid-prescription-guidelines.html*.

concurrent benzodiazepines. One commenter urged CMS to exercise caution when implementing measures that have the potential to inadvertently discourage providers from prescribing opioids to those patients who need them.

Response: We thank the commenters for sharing their suggestions and concerns about the potential of the future measure concept to introduce unintended consequences for patients using benzodiazepines. We also acknowledge commenters' concerns that the future measure concept may place undue accountability on facilities providing acute care for patients receiving long-term treatment for chronic pain, and we will take this issue into consideration as we develop the measure. We also believe it is important to understand and monitor the potential for unintended consequences, and we will take these issues into consideration to inform our ongoing measure development efforts.

Comment: One commenter recommended that CMS consider physician burden and time in developing this measure. This commenter further expressed concerns that emergency physicians do not always have access to the list of a patient's medications. Another commenter expressed concern that ED providers deliver episodic care and do not have control over the medications that their patients have been prescribed prior to arrival to the ED, and therefore performance on this measure is largely outside of the control of ED providers.

Response: We thank the commenters for sharing their concerns regarding ED physician burden and time, and concerns that performance on the measure may be largely outside the control of providers. The measure is not intended to hold facilities accountable for undocumented opioid or benzodiazepine prescriptions; if a patient's opioid or benzodiazepine medications are not recorded in the EHR because they could not be reconciled by the provider during the healthcare encounter, that patient will not be captured by the measure. While it may be difficult to gather a complete record of all medications from each patient during a healthcare encounter, we believe it is best practice to make reasonable efforts to determine what medications a patient is taking at the beginning of an encounter and document that in the clinical record. This approach aligns with The Joint Commission's National Patient Safety Goals which includes medication reconciliation as an important component of improving the safe use of medications.[143] We understand the importance of not developing and implementing measures that are overly burdensome regarding providers' time and burden, and we are committed to working with stakeholders, including providers, in developing this future measure. Although ED providers may face challenges that are unique to acute pain management, it is not reasonable to exclude them from this measure, due to the high rates of opioid prescriptions from ED settings. A study that analyzed data on ED discharges from the 2006 through 2010 National Hospital Ambulatory Medical Care Survey found that opioids were prescribed for 18.7 percent of all ED discharges, representing 21.7 million prescriptions per year.[144] Rates of opioids prescriptions in the outpatient settings may be high, but opioid prescription rates from the ED setting are also significant. Furthermore, discharge planning with the patient's primary care provider is a routine expectation for care coordination. We will consider these recommendations to inform our ongoing measure development and testing efforts.

Comment: Some commenters recommended that CMS explore the development and use of appropriate use criteria for opioid prescribing, and also recommended CMS explore measures of overuse; for example, the percentage of patients with more than a certain number of prescription fills over a time period.

Response: We appreciate the commenters' recommendations to explore appropriate use criteria for opioid prescribing, and we also will take into consideration the recommendation to explore measures of overuse in the Hospital OQR Program. We will consider these recommendations when developing a future measure addressing safe use of opioids and concurrent prescribing.

Comment: One commenter recommended that hospitals be held accountable for instances in which they initiate new combination opioid therapy or opioid-benzodiazepine therapy, and recommended that the measure not penalize hospitals for continuing home combination therapy. The commenter recommended that CMS establish a medication management plan, with pain management or primary care signing on, before sending a patient on combination therapy home.

Response: As we move through the development of this measure concept, we will consider the commenter's recommendations on holding hospitals accountable when they initiate new combination therapy, and not penalizing hospitals for continuing home combination therapy, which means treatment in which a patient is given two or more drugs (or other therapeutic agents) for a single disease. In addition, the recommendation to institute a medication management plan may help to inform our ongoing measure development.

Comment: One commenter requested clarification on how hypnotics will be viewed for purposes of this measure.

Response: We thank the commenter for requesting this clarification. Hypnotic drug products are a class of drugs used to induce and/or maintain sleep.[145] At this time, we are not including any non-benzodiazepine hypnotics in the scope of the measure. We are still developing this measure, and we will consider this comment to inform our ongoing measure development efforts.

Comment: Some commenters recommended that CMS exclude several groups from the measure, including hospice patients, cancer patients, and patients with sickle cell disease. One commenter recommended that the measure concept be limited to large quantities of medications because this would provide the option for emergency physicians to continue a patient's opioid, or opioid/benzodiazepine regimen, for a 5-day period. This commenter also encouraged CMS to consider alternative strategies that are more practical for the ED, such as better counseling on the risks and benefits of these medications, as well as investment in the development and promotion of clinical practice guidelines that focus on pain management and prescribing.

Response: We appreciate the commenters' recommendations on excluding certain populations from the measure, limiting the measure to cases involving large quantities of medications, and considering alternative strategies that are may be practical for the ED. We will take the commenters' recommendations into

[143] Joint Commission's National Patient Safety Goals. *https://www.jointcommission.org/assets/1/6/2016_NPSG_HAP.pdf.*

[144] Kea, B., Fu, R., Lowe, R., et al. (2016). Interpreting the National Hospital Ambulatory Medical Care Survey: United States Emergency Department Opioid Prescribing, 2006–2010. *American Emergency Medicine.* Wiley Periodicals, Inc. Retrieved [March 2016] from *http://onlinelibrary.wiley.com/doi/10.1111/acem.12862/abstract.*

[145] U.S. Food and Drug Administration. (2015). Sleep Disorder (Sedative-Hypnotic) Drug Information. Retrieved October 6, 2016, from *http://www.fda.gov/Drugs/DrugSafety/PostmarketDrugSafetyInformationforPatientsandProviders/ucm101557.htm.*

consideration in our measure development and testing efforts.

Comment: One commenter recommended removal of the following medication value sets: Benzodiazepines RXNORM Value Set and Schedule II and Schedule III Opioids RXNORM Value Set. This commenter expressed concerns regarding the feasibility of capturing the concept of ''medications that are active and do not end.'' The commenter also recommended that the measure solely address concurrent discharge medications.

Response: We interpret the concept of ''medications that are active and do not end'' as to refer to medications active on arrival or active home medications, which continue to remain on the patient's medications list at discharge if they were not discontinued by the provider, and that the commenter is concerned about how they would be captured in an eCQM value set. We interpret eCQM value sets as lists of specific values (terms and their codes) used to describe clinical and administrative concepts in the quality measures. They provide groupings of unique values along with a standard description or definition from one or more standard vocabularies used to describe the same clinical concept (for example, diabetes, clinical visit, demographics) within the quality measures. For more information about eCQM value sets, we refer readers to: *https://ecqi.healthit.gov/ecqm-tools/tool-library/value-set-authority-center-vsac*.

We will consider the most appropriate eCQM value sets for the measure specifications during feasibility testing. The measure concept is currently specified to address concurrent medication prescribing at discharge. We will consider these recommendations in our ongoing measure development efforts, and we thank the commenter for its suggestions.

Comment: One commenter recommended that a denominator exclusion is needed for ''Medical Reason'' for concurrent discharge medications; and to ensure accurate timeframes of data, the measurement period must be defined in the logic or within the Quality Data Model (QDM) variables.

Response: We thank the commenter for sharing its recommendation regarding excluding ''Medical Reason'' for concurrent discharge medications from the denominator and defining a measurement period in logic or QDM variables. As currently developed, the measurement period is defined as one year. We will take the commenter's recommendations into consideration in our measure development and testing efforts.

Comment: Some commenters expressed concern that the future measure concept is reliant on Prescription Drug Monitoring Programs (PDMP), and until coordinated PDMPs are in place, the measure should not be a part of a quality and patient safety initiative for emergency physician scoring. One commenter expressed concerns that the future measure concept is a poor measure for the ED given the ongoing lack of universal access to reliable PDMP data, the time it would take for ED physicians to gather this data, the potential for unintended consequences, and the relatively low number of opioid prescriptions linked to the ED setting. One commenter requested clarification on whether providers will be required to confirm opioid or benzodiazepine therapy through prescription monitoring programs, and how would this work for hospitals servicing patients from other States. Another commenter asserted that there needs to be a drug monitoring infrastructure that exchanges data with EHRs, dispensing pharmacies, and other relevant sources and compiles the data into one mechanism before CMS develops the concurrent prescribing of opioids measure. This commenter further asserted that implementing the future measure concept without taking in consideration the drug monitoring infrastructure would be premature, potentially confusing, and burdensome for facilities, and result in an inappropriate application of accountability.

Response: We interpret the commenters' use of the term PDMP to refer to a statewide electronic database, which collects designated data on substances dispensed in the State. We refer readers to *http://www.pdmpassist.org/* for information about PDMPs. We thank the commenters for sharing their concerns about the availability of PDMP data and that a drug monitoring infrastructure should be in place before we implement the proposed measure concept. The measure, as currently specified, uses data from the hospital EHR. We recognize that data on active prescriptions may not always be available, but the measure does not include undocumented prescriptions. This measure is intended to influence current prescribing practices to avoid concurrent prescriptions, but is not prescriptive of how hospitals approach this goal. The commenters' suggested practices of using PDMPs and interdisciplinary care teams are means to reach that goal. In addition, studies have shown that there are high rates of opioid prescriptions from ED settings. A study that analyzed data on ED discharges from the 2006 through 2010 National Hospital Ambulatory Medical Care Survey found that opioids were prescribed for 18.7 percent of all ED discharges, representing 21.7 million prescriptions per year.[146] Rates of opioids prescriptions in the outpatient settings may be high, but opioid prescription rates from the ED setting are also significant. We will consider these concerns to inform our ongoing measure development efforts.

Comment: One commenter urged CMS to leave the measure posted for stakeholder input for a substantial length of time (for example, more than 90 days) to allow stakeholders to conduct the necessary information-gathering. This commenter also recommended CMS engage with pharmacists in the future measure concept's development and implementation.

Response: We thank the commenter for its view and suggestion. We will continue to engage with stakeholders, including pharmacists, as we develop the future measure. We note that because this measure is still in development, additional public input opportunities exist prior to measure proposal in rulemaking, such as during MAP review and the NQF process. We also will consider allowing stakeholders more time to provide input into the development of the future measure concept.

Lastly, we invite all commenters to continue to actively engage in the measures development process for the Hospital OQR Program and other CMS quality reporting programs and encourage them to monitor the CMS Web site for future public input opportunities.

7. Maintenance of Technical Specifications for Quality Measures

CMS maintains technical specifications for previously adopted Hospital OQR Program measures. These specifications are updated as we continue to develop the Hospital OQR Program measure set. The manuals that contain specifications for the previously adopted measures can be found on the QualityNet Web site at: *https://www.qualitynet.org/dcs/ContentServer?c=*

[146] Kea, B., Fu, R., Lowe, R., et al. (2016). Interpreting the National Hospital Ambulatory Medical Care Survey: United States Emergency Department Opioid Prescribing, 2006–2010. *American Emergency Medicine.* Wiley Periodicals, Inc. Retrieved [October 2016] from *http://onlinelibrary.wiley.com/doi/10.1111/acem.12862/abstract.*

Page&pagename=QnetPublic%2FPage%2FQnetTier2&cid=1196289981244.

We refer readers to the CY 2013 OPPS/ASC final rule with comment period (77 FR 68469 through 68470), for a discussion of our policy for updating Hospital OQR Program measures, the same policy we adopted for updating Hospital IQR Program measures, which includes the subregulatory process for making updates to the adopted measures (77 FR 53504 through 53505). This policy expanded upon the subregulatory process for updating measures that we finalized in the CY 2009 OPPS/ASC final rule with comment period (73 FR 68766 through 68767). In the CY 2017 OPPS/ASC proposed rule (81 FR 45722), we did not propose any changes to our technical specifications policies.

8. Public Display of Quality Measures

Section 1833(t)(17)(E) of the Act, requires that the Secretary establish procedures to make data collected under the Hospital OQR Program available to the public. It also states that such procedures must ensure that a hospital has the opportunity to review the data that are to be made public, with respect to the hospital prior to such data being made public. In the CY 2017 OPPS/ASC proposed rule (81 FR 45722), we formalized our current public display practices regarding timing of public display and the preview period, as discussed in more detail below. We also proposed how we will announce the preview period timeframes.

In the CY 2014 OPPS/ASC proposed rule and final rule with comment period (78 FR 43645 and 78 FR 75092), we stated that we generally strive to display hospital quality measures data on the *Hospital Compare* Web site as soon as possible after measure data have been submitted to CMS. However, if there are unresolved display issues or pending design considerations, we may make the data available on other, non-interactive, CMS Web sites (78 FR 43645). Patient-level data that is chart-abstracted are updated on *Hospital Compare* quarterly, while data from claims-based measures and measures that are submitted using a Web-based tool are updated annually. Historically, preview for the April *Hospital Compare* data release typically occurs in January, preview for the July *Hospital Compare* data release typically occurs in April, preview for the October *Hospital Compare* data release typically occurs in July, and the preview for the December *Hospital Compare* data release typically occurs in October. During the preview period, hospitals have generally had approximately 30 days to preview their data.

In the proposed rule, therefore, we proposed to publicly display data on the *Hospital Compare* Web site, or other CMS Web site, as soon as possible after measure data have been submitted to CMS, consistent with current practice. In addition, we proposed that hospitals will generally have approximately 30 days to preview their data, also consistent with current practice. Lastly, moving forward, we proposed to announce the timeframes for the preview period starting with the CY 2018 payment determination on a CMS Web site and/or on our applicable listservs.

We invited public comments on our public display proposals as discussed above.

Comment: Some commenters supported CMS' proposal to formalize the current public display and reporting practices. One commenter expressed support of CMS' efforts to ensure consumers have adequate information with which to make informed health care decisions. This commenter further expressed that formalizing the current public display and reporting practices will not only help consumers make decisions about where to get their care, but will also encourage hospitals to ensure high quality of care. Another commenter applauded CMS' move toward a more transparent process for quality reporting. This commenter further asserted that making the publication of healthcare data more transparent will better educate both patients and providers, and lead to significant changes and improvement in the delivery system.

Response: We thank the commenters for their support.

Comment: One commenter did not support CMS' proposal to formalize current public display and reporting practices, and recommended CMS revise the preview timeframe from 30 to a minimum of 60 days to allow providers sufficient time to ensure information submitted is accurate.

Response: We believe 30 days is sufficient time for hospitals to preview their data in advance of the information being made public. We also note that the 30-day preview period practice is consistent with the preview period timeframe for publicly reporting program data with the Hospital IQR Program (77 FR 53505), the Hospital Readmissions Reduction Program (76 FR 51672 through 51673), the Hospital-Acquired Condition Reduction Program (78 FR 50727 through 50728), the PPS-Exempt Cancer Hospital Quality Reporting Program (77 FR 53562 through 53563), and the Inpatient Psychiatric Facility Quality Reporting Program (77 FR 53653 through 77 FR 53654). We also note that the ASCQR Program is finalizing a similar proposal in section XIV.B.7. of this final rule with comment period. We believe that this alignment across CMS quality programs will reduce burden on facilities (78 FR 50898). Furthermore, the complexity of measures and required calculations involve a significant amount of programming resources. Implementing a longer preview period would affect our ability to publish Hospital OQR Program data in a timely manner and result in substantial delays between hospital performance and the public reporting of measure data.

While we understand that a 60-day preview period would allow hospitals more time to review their Hospital OQR Program data prior to its publication, we believe 30 days provides an appropriate balance between sufficient time to review data and timely publication, providing patients with the most up to date information for use in making decisions about their care. Implementing a longer preview period would affect our ability to publish Hospital OQR Program data in a timely manner and likely result in longer delays between hospital performance and the public reporting of measure data because the complexity of these measures and the required calculations will involve a significant amount of programming resources.

After consideration of the public comments we received, we are finalizing, as proposed starting with the CY 2018 payment determination, our proposals to: (1) Publicly display data on the *Hospital Compare* Web site, or other CMS Web site, as soon as possible after measure data have been submitted to CMS; (2) provide hospitals with approximately 30 days to preview their data; and (3) announce the timeframes for the preview period on a CMS Web site and/or on our applicable listservs.

C. Administrative Requirements

1. QualityNet Account and Security Administrator

The QualityNet security administrator requirements, including setting up a QualityNet account and the associated timelines, are unchanged from those adopted in the CY 2014 OPPS/ASC final rule with comment period (78 FR 75108 through 75109). In that final rule with comment period, we codified these procedural requirements at 42 CFR 419.46(a). In the CY 2017 OPPS/ASC proposed rule (81 FR 45722), we did not propose any changes to these requirements.

2. Requirements Regarding Participation Status

We refer readers to the CY 2014 OPPS/ASC final rule with comment period (78 FR 75108 through 75109) and the CY 2016 OPPS/ASC final rule with comment period (80 FR 70519) for requirements for participation and withdrawal from the Hospital OQR Program. We also codified procedural requirements at 42 CFR 419.46(b). In the CY 2017 OPPS/ASC proposed rule (81 FR 45722), we did not propose any changes to our requirements regarding participation status.

D. Form, Manner, and Timing of Data Submitted for the Hospital OQR Program

1. Hospital OQR Program Annual Payment Determinations

In the CY 2014 OPPS/ASC final rule with comment period (78 FR 75110 through 75111) and the CY 2016 OPPS/ASC final rule with comment period (80 FR 70519 through 70520), we specified our data submission deadlines. We also codified our submission requirements at 42 CFR 419.46(c).

We also refer readers to the CY 2016 OPPS/ASC final rule with comment period (80 FR 70519 through 70520), where we finalized our proposal to shift the quarters upon which the Hospital OQR Program payment determinations are based. Those finalized deadlines for the CY 2017 payment determination and CY 2018 payment determination and subsequent years are illustrated in the tables below.

CY 2017 PAYMENT DETERMINATION (TRANSITION PERIOD)

Patient encounter quarter	Clinical data submission deadline
Q3 2015 (July 1–September 30)	2/1/2016
Q4 2015 (October 1–December 31)	5/1/2016
Q1 2016 (January 1–March 31)	8/1/2016

CY 2018 PAYMENT DETERMINATION AND SUBSEQUENT YEARS

Patient encounter quarter	Clinical data submission deadline
Q2 2016 (April 1–June 30)	11/1/2016
Q3 2016 (July 1–September 30)	2/1/2017
Q4 2016 (October 1–December 31)	5/1/2017
Q1 2017 (January 1–March 31)	8/1/2017

In the CY 2017 OPPS/ASC proposed rule (81 FR 45722 through 45723), we did not propose any changes to these policies.

2. Requirements for Chart-Abstracted Measures Where Patient-Level Data Are Submitted Directly to CMS for the CY 2019 Payment Determination and Subsequent Years

The following previously finalized Hospital OQR Program chart-abstracted measures require patient-level data to be submitted for the CY 2019 payment determination and subsequent years:

- OP–1: Median Time to Fibrinolysis (NQF #0287);
- OP–2: Fibrinolytic Therapy Received Within 30 Minutes of ED Arrival (NQF #0288);
- OP–3: Median Time to Transfer to Another Facility for Acute Coronary Intervention (NQF #0290);
- OP–4: Aspirin at Arrival (NQF #0286);
- OP–5: Median Time to ECG (NQF #0289);
- OP–18: Median Time from ED Arrival to ED Departure for Discharged ED Patients (NQF #0496);
- OP–20: Door to Diagnostic Evaluation by a Qualified Medical Professional;
- OP–21: Median Time to Pain Management for Long Bone Fracture (NQF #0662); and
- OP–23: Head CT Scan Results for Acute Ischemic Stroke or Hemorrhagic Stroke Patients who Received Head CT Scan Interpretation Within 45 Minutes of ED Arrival (NQF #0661).

We refer readers to the CY 2013 OPPS/ASC final rule with comment period (77 FR 68481 through 68484) for a discussion of the form, manner, and timing for data submission requirements of these measures for the CY 2014 payment determination and subsequent years.

In the CY 2017 OPPS/ASC proposed rule (81 FR 45723), we did not propose any changes to our policies regarding the submission of chart abstracted measure data where patient-level data are submitted directly to CMS.

3. Claims-Based Measure Data Requirements for the CY 2019 Payment Determination and Subsequent Years and CY 2020 Payment Determination and Subsequent Years

We refer readers to the CY 2014 OPPS/ASC final rule with comment period (78 FR 75111 through 75112), for a discussion of the general claims-based measure data submission requirements for the CY 2015 payment determination and subsequent years. In the CY 2017 OPPS/ASC proposed rule (81 FR 45723), we did not propose any changes to these policies for the CY 2019 payment determination.

However, in sections XIII.B.5.a. and b. of this final rule with comment period, we are adopting two claims-based measures beginning with the CY 2020 payment determination: OP–35: Admissions and Emergency Department Visits for Patients Receiving Outpatient Chemotherapy; and OP–36: Hospital Visits after Hospital Outpatient Surgery. The previously adopted submission requirements also apply to these measures.

There will be a total of nine claims-based measures for the CY 2020 payment determination and subsequent years:

- OP–8: MRI Lumbar Spine for Low Back Pain (NQF #0514);
- OP–9: Mammography Follow-Up Rates;
- OP–10: Abdomen CT—Use of Contrast Material;
- OP–11: Thorax CT—Use of Contrast Material (NQF #0513);
- OP–13: Cardiac Imaging for Preoperative Risk Assessment for Non-Cardiac, Low Risk Surgery (NQF #0669);
- OP–14: Simultaneous Use of Brain Computed Tomography (CT) and Sinus Computed Tomography (CT);
- OP–32: Facility 7-Day Risk-Standardized Hospital Visit Rate after Outpatient Colonoscopy (NQF #2539);
- OP–35: Admissions and Emergency Department Visits for Patients Receiving Outpatient Chemotherapy; and
- OP–36: Hospital Visits after Hospital Outpatient Surgery (NQF #2687).

In the CY 2017 OPPS/ASC proposed rule (81 FR 45723), we did not propose any changes to our claims-based measures submission policies for the CY 2020 payment determination and subsequent years.

4. Data Submission Requirements for the OP–37a–e: Outpatient and Ambulatory Surgery Consumer Assessment of Healthcare Providers and Systems (OAS CAHPS) Survey-Based Measures for the CY 2020 Payment Determination and Subsequent Years

As discussed in section XIII.B.5.c. of this final rule with comment period, we are adopting five survey-based measures derived from the OAS CAHPS Survey for the CY 2020 payment determination and subsequent years—three OAS CAHPS composite survey-based measures and two global survey-based measures. In this section, we proposed requirements related to survey administration and vendors. We note that we are adopting similar policies in

the ASCQR Program in section XIV.D.5. of this final rule with comment period.

a. Survey Requirements

The survey has three administration methods: Mail-only; telephone-only; and mixed mode (mail with telephone follow-up of nonrespondents). We refer readers to the Protocols and Guidelines Manual for the OAS CAHPS Survey (*https://oascahps.org/Survey-Materials*) for materials for each mode of survey administration.

For all three modes of administration, we proposed that data collection must be initiated no later than 21 days after the month in which a patient has a surgery or procedure at a hospital, and completed within 6 weeks (42 days) after initial contact of eligible patients begins. We proposed that hospitals, via their CMS-approved vendors (discussed below), must make multiple attempts to contact eligible patients unless the patient refuses or the hospital/vendor learns that the patient is ineligible to participate in the survey. In addition, we proposed that hospitals, via their CMS-approved survey vendor, collect survey data for all eligible patients using the timeline established above and report that data to CMS by the quarterly deadlines established for each data collection period unless the hospital has been exempted from the OAS CAHPS Survey requirements under the low volume exemption discussed in section XIII.B.5.c.(6) of this final rule with comment period, above. These submission deadlines would be posted on the OAS CAHPS Survey Web site (*https://oascahps.org*). Late submissions would not be accepted.

As discussed in more detail below, compliance with the OAS CAHPS Survey protocols and guidelines, including this monthly reporting requirement, will be overseen by CMS or its contractor that will receive approved vendors' monthly submissions, review the data, and analyze the results. As stated previously, all data collection and submission for the OAS CAHPS Survey measures is done at the Medicare participating hospital level, as identified by its CCN. All locations, that offer outpatient services, of each eligible Medicare participating hospital would be required to participate in the OAS CAHPS Survey. Therefore, the survey data reported using a Medicare participating hospital's CCN must include all eligible patients from all outpatient locations (whether the hospital outpatient department is on campus or off campus) of eligible Medicare participating hospital. Survey vendors acting on behalf of hospitals must submit data by the specified data submission deadlines. If a hospital's data are submitted after the data submission deadline, it will not fulfill the OAS CAHPS quality reporting requirements. We therefore strongly encourage hospitals to be fully appraised of the methods and actions of their survey vendors—especially the vendors' full compliance with OAS CAHPS Survey administration protocols—and to carefully inspect all data warehouse reports in a timely manner.

We note that the use of predictive or auto dialers in telephonic survey administration is governed by the Telephone Consumer Protection Act (TCPA) (47 U.S.C. 227) and subsequent regulations promulgated by the Federal Communications Commission (FCC) (47 CFR 64.1200) and Federal Trade Commission. We refer readers to the FCC's declaratory ruling released on July 10, 2015 further clarifying the definition of an auto dialer, available at: *https://apps.fcc.gov/edocs_public/attachmatch/FCC-15-72A1.pdf*. In the telephone-only and mixed mode survey administration methods, HOPDs and vendors must comply with the regulations discussed above, and any other applicable regulations. To the extent that any existing CMS technical guidance conflicts with the TCPA or its implementing regulations regarding the use of predictive or auto dialers, or any other applicable law, CMS expects vendors to comply with applicable law.

b. Vendor Requirements

To ensure that patients respond to the survey in a way that reflects their actual experiences with outpatient surgical care, and is not influenced by the hospital, we proposed that hospitals must contract with a CMS-approved OAS CAHPS Survey vendor to conduct or administer the survey. We believe that a neutral third-party should administer the survey for hospitals, and it is our belief that an experienced survey vendor will be best able to ensure reliable results. CAHPS survey approved vendors are also already used or required in the following CMS quality programs: the Hospital IQR Program (71 FR 68203 through 68204); the Hospital VBP Program (76 FR 26497, 26502 through 26503, and 26510); the ESRD QIP (76 FR 70269 through 70270); the HH QRP (80 FR 68709 through 68710); and the HQRP (80 FR 47141 through 47207).

Information about the list of approved survey vendors and how to authorize a vendor to collect data on a hospital's behalf is available through the OAS CAHPS Survey Web site at: *https://oascahps.org*. The Web portal has both public and secure (restricted access) sections to ensure the security and privacy of selected interactions. Hospitals will need to register on the OAS CAHPS Survey Web site (*https://oascahps.org*) in order to authorize the CMS-approved vendor to administer the survey and submit data on their behalf. Each hospital must then administer (via its vendor) the survey to all eligible patients treated during the data collection period on a monthly basis according to the guidelines in the Protocols and Guidelines Manual (*https://oascahps.org*) and report the survey data to CMS on a quarterly basis by the deadlines posted on the OAS CAHPS Survey Web site as stated above.

Moreover, we proposed to codify these OAS CAHPS Survey administration requirements for hospitals and survey vendors under the Hospital OQR Program at 42 CFR 419.46(g).

As stated previously, we encourage hospitals to participate in voluntary national implementation of the OAS CAHPS Survey that began in January 2016. This will provide hospitals the opportunity to gain first-hand experience collecting and transmitting OAS CAHPS data without the public reporting of results or Hospital OQR Program payment implications. For additional information, we refer readers to: *https://oascahps.org/General-Information/National-Implementation*.

We invited public comments on our proposals for the data submission requirements for the five proposed OAS CAHPS Survey measures for the CY 2020 payment determination and subsequent years as discussed above.

Comment: Many commenters recommended that CMS include an electronic method of administration, such as portal messages and/or email, for the OAS CAHPS Survey because electronic methods of survey administration would be more cost-effective for hospitals and more convenient for patients than administration via phone or standard mail. One commenter noted that electronic survey administration has allowed many hospitals to achieve significant cost savings in the administration of patient surveys, and asserted electronic administration may increase patient response rates. Some commenters expressed concerns that CMS has not explored and tested alternative data collection methods that may significantly decrease providers' cost in administering the survey and enhance patient participation. The commenters expressed concerns that CMS has not tested the OAS CAHPS

Survey in an online format as an alternative mode of administration of the survey.

Response: While email and Web-based survey administration modes are not available at this time, we are actively investigating these modes as possible new options for the future. This ongoing investigation includes, among other things, determining whether hospitals receive reliable email addresses from patients, whether there is adequate access to the Internet across all types of patients, and whether implementing a Web-based survey administration method would introduce bias into the survey administration process. However, we note that a previous study [147] investigating the suitability of speech-enabled interactive voice response (SE–IVR) and Web modes for publicly reported surveys of patients' experience of hospital care found lower response rates for mixed-mode administrations including a Web-based option than for mail-only and SE–IVR administrations. Portal messaging, like systems that are sometimes used to address patient questions, would require a Web portal that patients can access. If this were housed at the facility, patient confidentiality could potentially be an issue. Furthermore, as currently specified, the OAS CAHPS Survey requires that the survey be administered by an approved survey vendor. This is to ensure that patients respond to the survey in a way that reflects their actual experiences with outpatient surgical care, and is not influenced by the hospital. Removing vendors, neutral third parties, could raise issues of objectivity and bias. However, as stated above, we are actively investigating new modes of conducting this survey as possible options for the future. We believe that the data collected by this measure is so significant and important that collecting data and publicly reporting it sooner rather than later outweighs waiting for a Web-based survey administration method to be developed, tested, and implemented nationwide.

After consideration of the public comments we received, we are finalizing our proposals for the data submission requirements for the five OAS CAHPS Survey measures we are finalizing for the CY 2020 payment determination and subsequent years as proposed.

[147] Elliot, MN, Brown JA, Lehrman WG, Beckett MK, Hambarsoomian K, Giordano LA, Goldstein EH. A randomized experiment investigating the suitability of speech-enabled IVR and Web modes for publicly reported surveys of patients' experience of hospital care. Med Care Res Rev, 2013 April;70(2): 165–84.

5. Data Submission Requirements for Previously Finalized Measures for Data Submitted via a Web-Based Tool for the CY 2019 Payment Determination and Subsequent Years

The following Web-based quality measures previously finalized and retained in the Hospital OQR Program require data to be submitted via a Web-based tool (CMS' QualityNet Web site or CDC's NHSN Web site) for the CY 2018 payment determination and subsequent years:

- OP–12: The Ability for Providers with HIT to Receive Laboratory Data Electronically Directly into their ONC-Certified EHR System as Discrete Searchable Data (via CMS' QualityNet Web site);
- OP–17: Tracking Clinical Results between Visits (NQF #0491) (via CMS' QualityNet Web site);
- OP–22: Left Without Being Seen (NQF #0499) (via CMS' QualityNet Web site);
- OP–25: Safe Surgery Checklist Use (via CMS' QualityNet Web site);
- OP–26: Hospital Outpatient Volume on Selected Outpatient Surgical Procedures (via CMS' QualityNet Web site);
- OP–27: Influenza Vaccination Coverage among Healthcare Personnel (via the CDC NHSN Web site) (NQF #0431);
- OP–29: Appropriate Follow-up Interval for Normal Colonoscopy in Average Risk Patients (NQF #0658) (via CMS' QualityNet Web site);
- OP–30: Colonoscopy Interval for Patients with a History of Adenomatous Polyps—Avoidance of Inappropriate Use (NQF #0659) (via CMS' QualityNet Web site);
- OP–31: Cataracts: Improvement in Patient's Visual Function within 90 Days Following Cataract Surgery (NQF #1536) (via CMS' QualityNet Web site); and
- OP–33: External Beam Radiotherapy (EBRT) for Bone Metastases (NQF #1822) (via CMS' QualityNet Web site).

We refer readers to the CY 2014 OPPS/ASC final rule with comment period (78 FR 75112 through 75115) and the CY 2016 OPPS/ASC final rule with comment period (80 FR 70521) and the CMS QualityNet Web site (*https://www.qualitynet.org/dcs/ContentServer?c=Page&pagename=QnetPublic%2FPage%2FQnetTier2&cid=1205442125082*) for a discussion of the requirements for measure data submitted via the CMS QualityNet Web site for the CY 2017 payment determination and subsequent years. In addition, we refer readers to the CY 2014 OPPS/ASC final rule with comment period (78 FR 75097 through 75100) for a discussion of the requirements for measure data (specifically, the Influenza Vaccination Coverage Among Healthcare Personnel measure (NQF #0431)) submitted via the CDC NHSN Web site.

In the CY 2017 OPPS/ASC proposed rule (81 FR 45724 through 45725), we did not propose any changes to our policies regarding the submission of measure data submitted via a Web-based tool.

6. Population and Sampling Data Requirements for the CY 2019 Payment Determination and Subsequent Years

We refer readers to the CY 2011 OPPS/ASC final rule with comment period (75 FR 72100 through 72103) and the CY 2012 OPPS/ASC final rule with comment period (76 FR 74482 through 74483) for discussions of our policy that hospitals may voluntarily submit aggregate population and sample size counts for Medicare and non-Medicare encounters for the measure populations for which chart-abstracted data must be submitted.

In the CY 2017 OPPS/ASC proposed rule (81 FR 45725), we did not propose any changes to our population and sampling requirements.

7. Hospital OQR Program Validation Requirements for Chart-Abstracted Measure Data Submitted Directly to CMS for the CY 2019 Payment Determination and Subsequent Years

We refer readers to the CY 2013 OPPS/ASC final rule with comment period (77 FR 68484 through 68487) and the CY 2015 OPPS/ASC final rule with comment period (79 FR 66964 through 66965) for a discussion of finalized policies regarding our validation requirements. We also refer readers to the CY 2013 OPPS/ASC final rule with comment period (77 FR 68486 through 68487), for a discussion of finalized policies regarding our medical record validation procedure requirements. We codified these policies at 42 CFR 419.46(e). For the CY 2018 payment determination and subsequent years, validation is based on four quarters of data ((validation quarter 1 (January 1–March 31), validation quarter 2 (April 1–June 30), validation quarter 3 (July 1–September 30), and validation quarter 4 (October 1–December 31)) (80 FR 70524).

In the CY 2017 OPPS/ASC proposed rule (81 FR 45725), we did not propose any changes to our validation requirements.

8. Extension or Exemption Process for the CY 2019 Payment Determination and Subsequent Years

We refer readers to the CY 2013 OPPS/ASC final rule with comment period (77 FR 68489), the CY 2014 OPPS/ASC final rule with comment period (78 FR 75119 through 75120), the CY 2015 OPPS/ASC final rule with comment period (79 FR 66966), the CY 2016 OPPS/ASC final rule with comment period (80 FR 70524), and 42 CFR 419.46(d) for a complete discussion of our extraordinary circumstances extension or exception process under the Hospital OQR Program.

In the CY 2017 OPPS/ASC proposed rule (81 FR 45725), we proposed to update our extraordinary circumstances exemption (ECE) policy to extend the ECE request deadline for both chart-abstracted and Web-based measures from 45 days following an event causing hardship to 90 days following an event causing hardship. This proposal would become effective with ECEs requested on or after January 1, 2017. In the past, we have allowed hospitals to submit an ECE request form for measures within 45 days following an event that causes hardship and prevents them from providing data for measures (76 FR 74478 through 74479). In certain circumstances, however, it may be difficult for hospitals to timely evaluate the impact of certain extraordinary events within 45 days. We believe that extending the deadline to 90 days would allow hospitals more time to determine whether it is necessary and appropriate to submit an ECE request and to provide a more comprehensive account of the extraordinary circumstance in their ECE request form to CMS. For example, if a hospital has suffered damage due to a hurricane on January 1, it would have until March 31 to submit an ECE form via the QualityNet Secure Portal, mail, email, or secure fax as instructed on the ECE form.

This timeframe (90 calendar days) also aligns with the ECE request deadlines for the Hospital VBP Program (78 FR 50706), the Hospital-Acquired Condition Reduction Program (80 FR 49580), and the Hospital Readmissions Reduction Program (80 FR 49542 through 49543). We note that in the FY 2017 IPPS/LTCH PPS final rule (81 FR 57181 through 81 FR 57182; 81 FR 57230 through 57231), we finalized a deadline of 90 days following an event causing hardship for the Hospital IQR Program (in non-eCQM circumstances) and for the LTCH QRP Program. In section XIV.D.6. of this final rule with comment period, we also are also finalizing a deadline of 90 days following an event causing hardship for the ASCQR Program.

We invited public comments on our proposal to extend the submission deadline for an extraordinary circumstances extension or exemption to within 90 days of the date that the extraordinary circumstance occurred, effective January 1, 2017, for the CY 2019 payment determination and subsequent years, as discussed above.

Comment: Commenters supported CMS' proposal to change the extraordinary circumstances extension request deadline from 45 days to 90 days following an event causing hardship. The commenters asserted that extending the deadline for filing from 45 to 90 days will allow facilities to respond to the event and ensure patient safety before submitting the request for an extension or exemption.

Response: We thank the commenters for their support.

After consideration of the public comments received, we are finalizing our proposal to extend the submission deadline for requests for an extraordinary circumstances extension or exemption to within 90 days of the date that the extraordinary circumstance occurred, effective January 1, 2017, for the CY 2019 payment determination and subsequent years, as proposed.

9. Hospital OQR Program Reconsideration and Appeals Procedures for the CY 2019 Payment Determination and Subsequent Years—Clarification

We are making one clarification to our reconsideration and appeals procedures. We refer readers to the CY 2013 OPPS/ASC final rule with comment period (77 FR 68487 through 68489), the CY 2014 OPPS/ASC final rule with comment period (78 FR 75118 through 75119), and the CY 2016 OPPS/ASC final rule with comment period (80 FR 70524) for a discussion of our reconsideration and appeals procedures. Currently, a hospital must submit a reconsideration request to CMS via the QualityNet Web site no later than the first business day of the month of February of the affected payment year (78 FR 75118 through 75119). A hospital that is dissatisfied with a decision made by CMS on its reconsideration request may file an appeal with the Provider Reimbursement Review Board (78 FR 75118 through 75119). Beginning with the CY 2018 payment determination, however, hospitals must submit a reconsideration request to CMS via the QualityNet Web site by no later than the first business day on or after March 17 of the affected payment year (80 FR 70524). We codified the process by which participating hospitals may submit requests for reconsideration at 42 CFR 419.46(f). We also codified language at § 419.46(f)(3) regarding appeals with the Provider Reimbursement Review Board.

In the CY 2017 OPPS/ASC proposed rule (81 FR 45725), we clarified our policy regarding appeals procedures. Specifically, if a hospital fails to submit a timely reconsideration request to CMS via the QualityNet Web site by the applicable deadline, then the hospital will not subsequently be eligible to file an appeal with the Provider Reimbursement Review Board. This clarification will be effective January 1, 2017 for the CY 2017 payment determination and subsequent years.

We did not receive any public comments on our clarification to our reconsideration and appeals procedures. In summary, for the CY 2017 payment determination and subsequent years, we clarify that if a hospital fails to submit a timely reconsideration request to CMS via the QualityNet Web site by the applicable deadline, then the hospital will not subsequently be eligible to file an appeal with the Provider Reimbursement Review Board.

E. Payment Reduction for Hospitals That Fail To Meet the Hospital OQR Program Requirements for the CY 2017 Payment Determination

1. Background

Section 1833(t)(17) of the Act, which applies to subsection (d) hospitals (as defined under section 1886(d)(1)(B) of the Act), states that hospitals that fail to report data required to be submitted on the measures selected by the Secretary, in the form and manner, and at a time, specified by the Secretary will incur a 2.0 percentage point reduction to their Outpatient Department (OPD) fee schedule increase factor; that is, the annual payment update factor. Section 1833(t)(17)(A)(ii) of the Act specifies that any reduction applies only to the payment year involved and will not be taken into account in computing the applicable OPD fee schedule increase factor for a subsequent payment year.

The application of a reduced OPD fee schedule increase factor results in reduced national unadjusted payment rates that apply to certain outpatient items and services provided by hospitals that are required to report outpatient quality data in order to receive the full payment update factor and that fail to meet the Hospital OQR Program requirements. Hospitals that meet the reporting requirements receive the full OPPS payment update without

the reduction. For a more detailed discussion of how this payment reduction was initially implemented, we refer readers to the CY 2009 OPPS/ASC final rule with comment period (73 FR 68769 through 68772).

The national unadjusted payment rates for many services paid under the OPPS equal the product of the OPPS conversion factor and the scaled relative payment weight for the APC to which the service is assigned. The OPPS conversion factor, which is updated annually by the OPD fee schedule increase factor, is used to calculate the OPPS payment rate for services with the following status indicators (listed in Addendum B to the proposed rule, which is available via the Internet on the CMS Web site): ''J1,'' ''J2,'' ''P,'' ''Q1,'' ''Q2,'' ''Q3,'' ''R,'' ''S,'' ''T,'' ''V,'' or ''U.'' Payment for all services assigned to these status indicators will be subject to the reduction of the national unadjusted payment rates for hospitals that fail to meet Hospital OQR Program requirements, with the exception of services assigned to New Technology APCs with assigned status indicator ''S'' or ''T.'' We refer readers to the CY 2009 OPPS/ASC final rule with comment period (73 FR 68770 through 68771) for a discussion of this policy.

The OPD fee schedule increase factor is an input into the OPPS conversion factor, which is used to calculate OPPS payment rates. To reduce the OPD fee schedule increase factor for hospitals that fail to meet reporting requirements, we calculate two conversion factors—a full market basket conversion factor (that is, the full conversion factor), and a reduced market basket conversion factor (that is, the reduced conversion factor). We then calculate a reduction ratio by dividing the reduced conversion factor by the full conversion factor. We refer to this reduction ratio as the ''reporting ratio'' to indicate that it applies to payment for hospitals that fail to meet their reporting requirements.

Applying this reporting ratio to the OPPS payment amounts results in reduced national unadjusted payment rates that are mathematically equivalent to the reduced national unadjusted payment rates that would result if we multiplied the scaled OPPS relative payment weights by the reduced conversion factor. For example, to determine the reduced national unadjusted payment rates that applied to hospitals that failed to meet their quality reporting requirements for the CY 2010 OPPS, we multiplied the final full national unadjusted payment rate found in Addendum B of the CY 2010 OPPS/ASC final rule with comment period by the CY 2010 OPPS final reporting ratio of 0.980 (74 FR 60642).

In the CY 2009 OPPS/ASC final rule with comment period (73 FR 68771 through 68772), we established a policy that the Medicare beneficiary's minimum unadjusted copayment and national unadjusted copayment for a service to which a reduced national unadjusted payment rate applies would each equal the product of the reporting ratio and the national unadjusted copayment or the minimum unadjusted copayment, as applicable, for the service. Under this policy, we apply the reporting ratio to both the minimum unadjusted copayment and national unadjusted copayment for services provided by hospitals that receive the payment reduction for failure to meet the Hospital OQR Program reporting requirements. This application of the reporting ratio to the national unadjusted and minimum unadjusted copayments is calculated according to § 419.41 of our regulations, prior to any adjustment for a hospital's failure to meet the quality reporting standards according to § 419.43(h). Beneficiaries and secondary payers thereby share in the reduction of payments to these hospitals.

In the CY 2009 OPPS/ASC final rule with comment period (73 FR 68772), we established the policy that all other applicable adjustments to the OPPS national unadjusted payment rates apply when the OPD fee schedule increase factor is reduced for hospitals that fail to meet the requirements of the Hospital OQR Program. For example, the following standard adjustments apply to the reduced national unadjusted payment rates: The wage index adjustment; the multiple procedure adjustment; the interrupted procedure adjustment; the rural sole community hospital adjustment; and the adjustment for devices furnished with full or partial credit or without cost. Similarly, OPPS outlier payments made for high cost and complex procedures will continue to be made when outlier criteria are met. For hospitals that fail to meet the quality data reporting requirements, the hospitals' costs are compared to the reduced payments for purposes of outlier eligibility and payment calculation. We established this policy in the OPPS beginning in the CY 2010 OPPS/ASC final rule with comment period (74 FR 60642). For a complete discussion of the OPPS outlier calculation and eligibility criteria, we refer readers to section II.G. of this final rule with comment period.

2. Reporting Ratio Application and Associated Adjustment Policy for CY 2017

In the CY 2017 OPPS/ASC proposed rule (81 FR 45726 through 45727), we proposed to continue our established policy of applying the reduction of the OPD fee schedule increase factor through the use of a reporting ratio for those hospitals that fail to meet the Hospital OQR Program requirements for the full CY 2017 annual payment update factor. For the CY 2017 OPPS, the proposed reporting ratio is 0.980, calculated by dividing the proposed reduced conversion factor of 73.411 by the proposed full conversion factor of 74.909. We proposed to continue to apply the reporting ratio to all services calculated using the OPPS conversion factor. For the CY 2017 OPPS, we proposed to apply the reporting ratio, when applicable, to all HCPCS codes to which we have proposed status indicator assignments of ''J1,'' ''J2,'' ''P,'' ''Q1,'' ''Q2,'' ''Q3,'' ''Q4,'' ''R,'' ''S,'' ''T,'' ''V,'' and ''U'' (other than new technology APCs to which we have proposed status indicator assignment of ''S'' and ''T''). We proposed to continue to exclude services paid under New Technology APCs. We proposed to continue to apply the reporting ratio to the national unadjusted payment rates and the minimum unadjusted and national unadjusted copayment rates of all applicable services for those hospitals that fail to meet the Hospital OQR Program reporting requirements. We also proposed to continue to apply all other applicable standard adjustments to the OPPS national unadjusted payment rates for hospitals that fail to meet the requirements of the Hospital OQR Program. Similarly, we proposed to continue to calculate OPPS outlier eligibility and outlier payment based on the reduced payment rates for those hospitals that fail to meet the reporting requirements.

We invited public comments on these proposals. We did not receive any public comments on these proposals. In this final rule with comment period, we are clarifying that the reporting ratio does not apply to codes with status indicator ''Q4'' because services and procedures coded with status indicator ''Q4'' are either packaged or paid through the Clinical Laboratory Fee Schedule and are never paid through the OPPS. Otherwise, we are finalizing application of the reporting ratio as proposed. For the CY 2017 OPPS, the final reporting ratio is 0.980, calculated by dividing the final reduced conversion factor of $75.001 by the final full conversion factor of $73.501.

XIV. Requirements for the Ambulatory Surgical Center Quality Reporting (ASCQR) Program

A. Background

1. Overview

We refer readers to section XIII.A.1. of this final rule with comment period for a general overview of our quality reporting programs.

2. Statutory History of the ASCQR Program

We refer readers to section XIV.K.1. of the CY 2012 OPPS/ASC final rule with comment period (76 FR 74492 through 74494) for a detailed discussion of the statutory history of the ASCQR Program.

3. Regulatory History of the ASCQR Program

We refer readers to section XV.A.3. of the CY 2014 OPPS/ASC final rule with comment period (78 FR 75122), section XIV.4. of the CY 2015 OPPS/ASC final rule with comment period (79 FR 66966 through 66987), and section XIV. of the CY 2016 OPPS/ASC final rule with comment period (80 FR 70526 through 70537) for an overview of the regulatory history of the ASCQR Program.

B. ASCQR Program Quality Measures

1. Considerations in the Selection of ASCQR Program Quality Measures

We refer readers to the CY 2013 OPPS/ASC final rule with comment period (77 FR 68493 through 68494) for a detailed discussion of the priorities we consider for ASCQR Program quality measure selection. In the CY 2017 OPPS/ASC proposed rule (81 FR 45727), we did not propose any changes to this policy.

2. Policies for Retention and Removal of Quality Measures From the ASCQR Program

We previously adopted a policy that quality measures adopted for an ASCQR Program measure set for a previous payment determination year be retained in the ASCQR Program for measure sets for subsequent payment determination years, except when they are removed, suspended, or replaced as indicated (76 FR 74494 and 74504; 77 FR 68494 through 68495; 78 FR 75122; 79 FR 66967 through 66969). In the CY 2017 OPPS/ASC proposed rule (81 FR 45727), we did not propose any changes to this policy.

We refer readers to the CY 2015 OPPS/ASC final rule with comment period (79 FR 66967 through 66969) and 42 CFR 416.320 for a detailed discussion of the process for removing adopted measures from the ASCQR Program. In the CY 2017 OPPS/ASC proposed rule (81 FR 45727), we did not propose any changes to this process.

3. ASCQR Program Quality Measures Adopted in Previous Rulemaking

In the CY 2012 OPPS/ASC final rule with comment period (76 FR 74492 through 74517), we implemented the ASCQR Program effective with the CY 2014 payment determination. In the CY 2012 OPPS/ASC final rule with comment period (76 FR 74496 through 74511), we adopted five claims-based measures for the CY 2014 payment determination and subsequent years, two measures with data submission directly to CMS via an online data submission tool for the CY 2015 payment determination and subsequent years, and one process of care, preventive service measure submitted via an online data submission tool to CDC's National Health Safety Network (NHSN) for the CY 2017 payment determination and subsequent years. In the CY 2014 OPPS/ASC final rule with comment period (78 FR 75124 through 75130), we adopted three chart-abstracted measures with data submission to CMS via an online data submission tool for the CY 2017 payment determination and subsequent years. In the CY 2015 OPPS/ASC final rule with comment period (79 FR 66984 through 66985), we excluded one of these measures, ASC–11: Cataracts: Improvement in Patient's Visual Function within 90 Days Following Cataract Surgery (NQF #1536), from the CY 2017 payment determination measure set and allowed for voluntary data collection and reporting for the CY 2017 payment determination and subsequent years. In the CY 2015 OPPS/ASC final rule with comment period (79 FR 66970 through 66979), we adopted one additional claims-based measure for the CY 2018 payment determination and subsequent years. In the CY 2016 OPPS/ASC final rule with comment period (80 FR 70526 through 70537), we did not adopt any additional measures for the CY 2019 payment determination and subsequent years.

The previously finalized measure set for the ASCQR Program for the CY 2019 payment determination and subsequent years is listed below.

ASCQR Program Measure Set Previously Finalized for the CY 2019 Payment Determination and Subsequent Years

ASC No.	NQF No.	Measure name
ASC–1	0263	Patient Burn.
ASC–2	0266	Patient Fall.
ASC–3	0267	Wrong Site, Wrong Side, Wrong Patient, Wrong Procedure, Wrong Implant.
ASC–4	†0265	All-Cause Hospital Transfer/Admission.
ASC–5	† 0264	Prophylactic Intravenous (IV) Antibiotic Timing.
ASC–6	N/A	Safe Surgery Checklist Use.
ASC–7	N/A	ASC Facility Volume Data on Selected ASC Surgical Procedures.*
ASC–8	0431	Influenza Vaccination Coverage Among Healthcare Personnel.
ASC–9	0658	Endoscopy/Polyp Surveillance: Appropriate Follow-Up Interval for Normal Colonoscopy in Average Risk Patients.
ASC–10	0659	Endoscopy/Polyp Surveillance: Colonoscopy Interval for Patients with a History of Adenomatous Polyps—Avoidance of Inappropriate Use.
ASC–11	1536	Cataracts: Improvement in Patient's Visual Function within 90 Days Following Cataract Surgery.**
ASC–12	2539	Facility 7-Day Risk-Standardized Hospital Visit Rate after Outpatient Colonoscopy.

† We note that NQF endorsement for this measure was removed.

* Procedure categories and corresponding HCPCS codes are located at: *http://qualitynet.org/dcs/ContentServer?c=Page&pagename=QnetPublic%2FPage%2FQnetTier2&cid=1228772475754*.

** Measure voluntarily collected effective beginning with the CY 2017 payment determination as set forth in section XIV.E.3.c. of the CY 2015 OPPS/ASC final rule with comment period (79 FR 66984 through 66985).

4. ASCQR Program Quality Measures for the CY 2020 Payment Determination and Subsequent Years

We refer readers to the CY 2014 OPPS/ASC final rule with comment period (78 FR 75124) for a detailed discussion of our approach to measure selection for the ASCQR Program. In the CY 2017 OPPS/ASC proposed rule (81 FR 45728 through 45734), we proposed to adopt a total of seven measures for the CY 2020 payment determination and subsequent years: Two measures collected via a CMS online data submission tool and five Outpatient and Ambulatory Surgery Consumer Assessment of Healthcare Providers and Systems (OAS CAHPS) Survey-based measures. The two measures that require data to be submitted directly to CMS via an online data submission tool are: (1) ASC–13: Normothermia Outcome; and (2) ASC–14: Unplanned Anterior Vitrectomy. The five proposed survey-based measures (ASC–15a–e) are collected via the OAS CAHPS Survey. These measures are discussed in detail below.

a. ASC–13: Normothermia Outcome

(1) Background

Impairment of thermoregulatory control due to anesthesia may result in perioperative hypothermia. Perioperative hypothermia is associated with numerous adverse outcomes, including: Cardiac complications; [148] surgical site infections; [149] impaired coagulation; [150] and colligation of drug effects; [151] as well as post-anesthetic shivering and thermal discomfort. When intraoperative normothermia is maintained, patients experience fewer adverse outcomes and their overall care costs are lower.[152] Several methods to maintain normothermia are available. While there is no literature currently available on variation in rates of normothermia among ASC facilities, variability in maintaining normothermia has been demonstrated in other clinical care settings.[153] This measure provides the opportunity for ASCs to improve quality of care and lower the rates of anesthesia-related complications in the ASC setting.

(2) Overview of Measure

We believe it is important to monitor the rate of anesthesia-related complications in the ASC setting because many surgical procedures performed at ASCs involve anesthesia. Therefore, we proposed to adopt the ASC–13: Normothermia Outcome measure, which is based on aggregate measure data collected by the ASC and submitted via a CMS online data submission tool (QualityNet), in the ASCQR Program for the CY 2020 payment determination and subsequent years. We expect the measure will promote improvement in patient care over time, because measurement coupled with transparency in publicly reporting of measure information would make patient outcomes following procedures performed under general or neuraxial anesthesia more visible to ASCs and patients and incentivize ASCs to incorporate quality improvement activities to reduce perioperative hypothermia and associated complications where necessary.

Section 1890A of the Act requires the Secretary to establish a prerulemaking process with respect to the selection of certain categories of quality and efficiency measures. Under section 1890A(a)(2) of the Act, the Secretary must make available to the public by December 1 of each year a list of quality and efficiency measures that the Secretary is considering for the Medicare program. The proposed ASC–13 measure was included on a publicly available document entitled ''List of Measures under Consideration for December 1, 2014.'' [154] The MAP reviewed the measure (MUC ID: X3719) and conditionally supported it for the ASCQR Program, pending completion of reliability testing and NQF review and endorsement.[155] The MAP agreed that this measure is highly impactful and meaningful to patients. It stated that anesthetic-induced thermoregulatory impairment may cause perioperative hypothermia, which is associated with adverse outcomes including significant morbidity (decrease in tissue metabolic rate, myocardial ischemia, surgical site infections, bleeding diatheses, prolongation of drug effects) and mortality. As an intermediate outcome measure, the workgroup agreed that this measure moves towards an outcome measure that fills the workgroup identified gap of anesthesia-related complications.[156]

Furthermore, sections 1833(i)(7)(B) and 1833(t)(17)(C)(i) of the Act, when read together, require the Secretary, except as the Secretary may otherwise provide, to develop measures appropriate for the measurement of the quality of care furnished by ASCs that reflect consensus among affected parties and, to the extent feasible and practicable, that include measures set forth by one or more national consensus building entities. However, we note that section 1833(i)(7)(B) of the Act does not require that each measure we adopt for the ASCQR Program be endorsed by a national consensus building entity, or by the NQF specifically. Further, under section 1833(i)(7)(B) of the Act, section 1833(t)(17)(C)(i) of the Act applies to the ASCQR Program, except as the Secretary may otherwise provide. Under this provision, the Secretary has further authority to adopt non-endorsed measures. As stated in the CY 2012 OPPS/ASC final rule with comment period (76 FR 74465 and 74505), we believe that consensus among affected parties can be reflected through means other than NQF endorsement, including consensus achieved during the measure development process, consensus shown through broad acceptance and use of measures, and consensus through public comment. We believe this proposed measure meets these statutory requirements.

The proposed ASC–13 measure is not NQF-endorsed. However, this measure is maintained by the ASC Quality Collaboration,[157] an entity recognized within the community as an expert in measure development for the ASC setting. We believe that this measure is appropriate for the measurement of quality care furnished by ASCs, because procedures using anesthesia are commonly performed in ASCs and, as discussed above, maintenance of

[148] Frank SM, Fleisher LA, Breslow MJ, et al. Perioperative maintenance of normothermia reduces the incidence of morbid cardiac events: A randomized clinical trial. *JAMA.* 1997;277(14): 1127–1134.

[149] Kurz A, Sessler DI, Lenhardt R. Perioperative normothermia to reduce the incidence of surgical-wound infection and shorten hospitalization: Study of wound infection and temperature group. *N Engl J Med.* 1996;334(19): 1209–1215.

[150] Rajagopalan S, Mascha E, Na J, Sessler DI. The effects of mild hypothermia on blood loss and transfusion requirements during total hip arthroplasty. *Lancet.* 1996;347(8997):289–292.

[151] Kurz A. Physiology of thermoregulation. *Best Pract Res Clin Anaesthesiol.*2008;22(4):627–644.

[152] Mahoney CB, Odom J. Maintaining intraoperative normothermia: A meta-analysis of outcomes with costs. *AANA Journal.* 1999;67(2): 155–164.

[153] Frank SM, Beattie C, Christopherson R, et al. Unintentional Hypothermia is associated with Postoperative Myocardial Ischemia: The Perioperative Ischemia Randomized Anesthesia Trial Study Group. Anesthesiology 1993;78(3):468–476.

[154] National Quality Forum. *List of Measures under Consideration for December 1, 2014.*National Quality Forum, Dec. 2014. Available at: *https://www.qualityforum.org/Setting_Priorities/Partnership/Measures_Under_Consideration_List_2014.aspx.*

[155] National Quality Forum. *MAP 2015 Final Recommendations to HHS and CMS.* Rep. National Quality Forum, Jan. 2015. Available at: *http://www.qualityforum.org/WorkArea/linkit.aspx?LinkIdentifier=id&ItemID=78711.*

[156] Ibid.

[157] ASC Quality Collaboration. ''ASC Quality Collaboration.'' Available at: *http://www.ascquality.org/.*

perioperative normothermia can signify important issues in the care being provided by ASCs. While the Normothermia Outcome measure is not NQF-endorsed, we believe this measure reflects consensus among affected parties, because the MAP, which represents stakeholder groups, reviewed and conditionally supported the measure for use in the ASCQR Program. The MAP agreed that this measure ''is highly impactful and meaningful to patients'' and that, as an intermediate outcome measure, the Normothermia Outcome measure moves towards an outcome measure that fills the workgroup-identified gap of anesthesia-related complications. Moreover, we believe this measure is reliable because reliability testing completed by the measure steward comparing ASC-reported normothermia rates and re-abstracted normothermia rates found the difference from originally submitted and re-abstracted normothermia rates ranged from -1.6 percent to 0.9 percent, with a 95 percent confidence interval of -0.9 percent, 0.5 percent. Because this confidence interval includes zero, there is no evidence that the submitted and abstracted rates are statistically different at the $p = 0.05$ level. Therefore, we believe there is strong evidence that the Normothermia Outcome measure is reliable.

(3) Data Sources

This measure is based on aggregate measure data collected via chart-abstraction by the ASC and submitted via a CMS online data submission tool (that is, QualityNet).

We proposed that the data collection period for the proposed ASC–13 measure would be the calendar year 2 years prior to the applicable payment determination year. For example, for the CY 2020 payment determination, the data collection period would be CY 2018. We also proposed that ASCs submit these data to CMS during the time period of January 1 to May 15 in the year prior to the affected payment determination year. For example, for the CY 2020 payment determination, the submission period would be January 1, 2019 to May 15, 2019. We refer readers to section XIV.D.3.b. of this final rule with comment period for a more detailed discussion of the requirements for data submitted via a CMS online data submission tool.

(4) Measure Calculation

The outcome measured in the proposed ASC–13 measure is the percentage of patients having surgical procedures under general or neuraxial anesthesia of 60 minutes or more in duration who are normothermic within 15 minutes of arrival in the post-anesthesia care unit (PACU). The numerator is the number of surgery patients with a body temperature equal to or greater than 96.8 degrees Fahrenheit/36 degrees Celsius recorded within 15 minutes of arrival in the PACU. The denominator is all patients, regardless of age, undergoing surgical procedures under general or neuraxial anesthesia of greater than or equal to 60 minutes in duration.

(5) Cohort

The measure includes all patients, regardless of age, undergoing surgical procedures under general or neuraxial anesthesia of greater than or equal to 60 minutes' duration.

The measure excludes: Patients who did not have general or neuraxial anesthesia; patients whose length of anesthesia was less than 60 minutes; and patients with physician/advanced practice nurse/physician assistant documentation of intentional hypothermia for the procedure performed. Additional methodology and measure development details are available at: *http://www.ascquality.org/qualitymeasures.cfm* under ''ASC Quality Collaboration Measures Implementation Guide.''

(6) Risk Adjustment

The measure is not risk-adjusted.

We invited public comments on our proposal to adopt the ASC–13: Normothermia Outcome measure for the CY 2020 payment determination and subsequent years as discussed above.

Comment: Many commenters supported adoption of the proposed ASC–13 measure because impairment of thermoregulatory control due to anesthesia may result in perioperative hypothermia, which has been associated with numerous adverse outcomes, and commenters believe this measure would promote improvement in patient care outcomes. Some commenters supported adoption of the proposed ASC–13 measure because the commenters believe this measure will promote improvement in patient care over time, and incentivize ASCs to engage in more quality improvement activities through public reporting of measure performance data.

Response: We thank commenters for their support.

Comment: A number of commenters did not support adoption of the proposed ASC–13 measure because they believe there is a lack of evidence of a performance gap in this area for ASCs.

Response: While we acknowledge there is currently a lack of evidence regarding a performance gap in normothermia outcomes, we believe the serious adverse outcomes associated with perioperative hypothermia, coupled with the frequency of procedures using anesthesia being performed in ASCs, warrant proactive monitoring of normothermia outcomes in the ASC setting. In addition, we note that some evidence suggests variability in normothermia maintenance in other clinical settings.[158] We also believe the resulting publicly reported data on normothermia outcomes will help inform patient decision-making, and incentivize ASCs to engage in quality improvement efforts.

Comment: A few commenters did not support adoption of the proposed ASC–13 measure because the measure is chart-abstracted and because the measure is not NQF-endorsed.

Response: In selecting measures for the ASCQR Program, we weigh the relevance and utility of measures against the potential burden to ASCs resulting from the measure's adoption. While we understand the commenters' concerns regarding the burden of chart-abstracting measures, we believe the benefits of including it in the ASCQR Program and publicly reporting normothermia outcome data for use in patient decision-making and incentivizing ASCs to engage in quality improvement efforts to reduce rates of perioperative hypothermia outweigh the burden associated with collecting aggregate data on patients treated at an ASC.

In addition, as we discuss above, section 1833(t)(17)(C)(i) of the Act does not require that each measure we adopt for the ASCQR Program be endorsed by a national consensus building entity, or the NQF specifically. Further, under section 1833(i)(7)(B) of the Act, section 1833(t)(17)(C)(i) of the Act applies to the ASCQR Program, except as the Secretary may otherwise provide. Under this provision, the Secretary has further authority to adopt non-endorsed measures. While we strive to adopt NQF-endorsed measures when possible, we believe the requirement that measures reflect consensus among affected parties can be achieved in other ways, including through the measure development process, through broad acceptance and use of the measure, and through public comments. As noted in the CY 2017 OPPS/ASC proposed rule (81 FR 45728), ASC–13 is maintained by

[158] Frank SM, Beattie C, Christopherson R, et al. Unintentional Hypothermia is associated with Postoperative Myocardial Ischemia: The Perioperative Ischemia Randomized Anesthesia Trial Study Group. Anesthesiology 1993;78(3):468–476.

the ASC Quality Collaboration, an entity recognized within the community as an expert in measure development for the ASC setting. In addition, this measure is already publicly reported as part of the ASC Quality Collaboration's quarterly Quality Report. Furthermore, the MAP, which represents stakeholder groups, reviewed and conditionally supported the measure for use in the ASCQR Program. Therefore, we believe the measure reflects consensus among affected parties.

Comment: One commenter asserted that, because the proposed ASC–13 measure only tracks post-operative temperature and not perioperative temperature, it is an inappropriate or imprecise quality measure, and therefore, should not be included in the ASCQR Program measure set.

Response: We disagree with the commenter's assertion that only tracking patient temperature immediately following anesthesia end time results in an imprecise or inappropriate quality measure. The field testing conducted for the ASC–13 measure found that, under its current specifications, the measure is able to distinguish levels of performance across facilities, thereby demonstrating its precision as a quality measure. We therefore believe the measure as currently specified is appropriate for use in the ASCQR Program, because we believe it will incentivize ASCs to engage in quality improvement efforts around patients' return to normothermia. One of the central goals of the ASCQR Program is to drive improvement in the quality of care provide in the ASC setting, and we, therefore, believe the measure's focus on return to normothermia within 15 minutes of arrival in the PACU is appropriate for assessing ASC performance on this measure. However, we will continue to assess the appropriateness and precision of this measure as currently specified as a driver of quality improvement.

Comment: One commenter noted that a similar measure was previously used for inpatient surgical procedures and subsequently retired based on sustained improvement in normothermia following general anesthesia. The commenter recommended that the ASCQR Program take a similar approach by adopting the proposed ASC–13 measure and then retiring the measure once there is validation of sustained normothermia compliance.

Response: We thank the commenter for its recommendation and note that the ASCQR Program has previously adopted policies regarding the retention and removal of quality measures (76 FR 74494 and 74504; 77 FR 68494 through 68495; 78 FR 75122; 79 FR 66967 through 66969). One of these criteria is an assessment of whether a measure is ''topped out,'' or when measure performance is so high and unvarying that meaningful distinctions and improvements in performance can no longer be made (79 FR 66968). As we noted in the CY 2016 OPPS/ASC final rule with comment period (80 FR 70527), the benefits of removing a measure from the ASCQR Program will be assessed on a case-by-case basis. We will evaluate all measures adopted for the ASCQR Program against these criteria as a whole in determining whether to suspend or remove a previously adopted measure from the ASCQR Program measure set.

Comment: One commenter urged CMS to ensure that the proposed ASC–13 measure population exclude procedures where propofol is administered because propofol is not general anesthesia. The commenter further recommended that CMS exclude non-surgical procedures, such as endoscopy, from this measure.

Response: Depending on the dose administered, propofol may in fact be used for moderate sedation, monitored anesthesia care, and the induction/maintenance of general anesthesia. The ASC–13 measure only includes procedures performed under general or neuraxial anesthesia of 60 minutes or more in duration and, as a result, only procedures in which propofol is used as a general anesthetic for 60 minutes or more would be included in this measure. We refer readers to the measure methodology where this is discussed, *http://www.ascquality.org/qualitymeasures.cfm*, under ''ASC Quality Collaboration Measures Implementation Guide.'' While these instances may be rare, we believe it is appropriate to include procedures where propofol is used as a general anesthetic in this measure, because those procedures are subject to the same patient outcome concerns regarding maintenance of normothermia as procedures performed using other anesthetics. We also note that the majority of endoscopy procedures do not involve general anesthesia, and would, therefore, be excluded from the measure. However, nonsurgical procedures performed under general or neuraxial anesthesia of 60 minutes or more in duration would be included in the measure. Again, while these procedures may be rare, we believe it is important to capture patient outcome data for these procedures in order to incentivize quality improvement among ASCs in normothermia maintenance.

Comment: One commenter noted that the 2015 Surgical Standing Committee convened by NQF approved a change in the definition of normothermia from 36 degrees Celsius/96.8 degrees Fahrenheit to 35.5 degrees Celsius/95.9 degrees Fahrenheit, and that NQF endorsed this changed definition in September 2015. The commenter also expressed concern that adopting the Normothermia Outcome measure in the ASCQR Program using a less current definition of ''normothermia'' may result in misalignment in quality measurement across federal healthcare quality programs. The commenter therefore recommended CMS adopt the proposed Normothermia Outcome measure with one modification, to use the more current definition of ''normothermia.''

Response: We thank the commenter for its recommendation. We believe the commenter is referring to the 2014 Surgery Project at NQF, which released its final report in December of 2015. This report is available at: *http://www.qualityforum.org/WorkArea/linkit.aspx?LinkIdentifier=id&ItemID=81394*. We interpret the commenter's reference to a ''change in the definition of normothermia'' to refer to a different, recently endorsed measure, NQF #2681: Perioperative Temperature Management, which uses a temperature threshold of 35.5 degrees Celsius/95.9 degrees Fahrenheit, as opposed to the 36 degrees Celsius/96.8 degree Fahrenheit threshold used in the ASC–13 measure. We believe using the higher temperature threshold for normothermia is still clinically appropriate. This higher temperature threshold has been used as the definition of normothermia in a number of journal articles and best practices reviews,[159] and is maintained in the American Society of PeriAnesthesia Nurses' Clinical Guideline for the Prevention of Unplanned Perioperative Hypothermia.[160] Furthermore, we believe maintaining a higher temperature threshold for normothermia under the ASC–13 measure will provide greater incentive for ASCs to engage in quality improvement in this area by encouraging facilities to engage in more proactive perioperative temperature maintenance in order to shorten patients' time for return to normothermia. In addition, the MAP agreed that this measure ''is highly impactful and meaningful to patients.''

[159] Kurz, A. Thermal care in the perioperative period. *Best Pract Res Clin Anesthesiol.* 2008;22:39–62.

[160] Hoover VD et al. ASPAN's evidence-based clinical practice guideline for the promotion of perioperative normothermia: Second edition. *J Perianesth Nurs.* 2010 Dec; 25(6):346–365.

Therefore, we believe finalizing the measure along with the measure's definition of normothermia as proposed is appropriate. However, we appreciate commenters' concerns that this measure may have an unclear performance gap and that this measure's lower bound for normothermia does not match the lower bound for normothermia in NQF #2681, a measure we recently finalized for inclusion in the quality category of the Merit-based Incentive Payment System. We will engage the measure steward in harmonization efforts. We will discuss our continued evaluation of this measure in a future year's rulemaking.

After consideration of the public comments we received, we are finalizing our proposal to adopt the ASC–13: Normothermia Outcome measure for the ASCQR Program for the CY 2020 payment determination and subsequent years as proposed. We will discuss our continued evaluation of this measure in a future year's rulemaking.

b. ASC–14: Unplanned Anterior Vitrectomy

(1) Background

An unplanned anterior vitrectomy is performed when vitreous inadvertently prolapses into the anterior segment of the eye during cataract surgery. Cataracts are a leading cause of blindness in the United States, with 24.4 million cases in 2010.[161] Each year, approximately 1.5 million patients undergo cataract surgery to improve their vision.[162] While unplanned anterior vitrectomy rates are relatively low, complications from this procedure may result in poor visual outcomes and other complications, including retinal detachment.[163] Cataract surgery is the most common surgery performed in ASCs; therefore, this measure is of interest to the ASC Program.[164]

(2) Overview of Measure

Based on the prevalence of cataract surgery in the ASC setting, we believe it is important to minimize adverse patient outcomes associated with cataract surgery. Therefore, we proposed to adopt the ASC–14: Unplanned Anterior Vitrectomy measure in the ASCQR Program for the CY 2020 payment determination and subsequent years. We expect the measure would promote improvement in patient care over time, because measurement coupled with transparency in publicly reporting measure information would make the rate of this unplanned procedure at ASCs more visible to both ASCs and patients and would incentivize ASCs to incorporate quality improvement activities to reduce the occurrence of unplanned anterior vitrectomies. The measure also addresses the MAP-identified priority measure area of procedure complications for the ASCQR Program.[165]

The ASC–14 measure we proposed was included on a publicly available document entitled ''List of Measures under Consideration for December 1, 2014.'' [166] The MAP reviewed this measure (MUC ID: X3720) and conditionally supported it for the ASCQR Program, pending completion of reliability testing and NQF review and endorsement.[167] The MAP agreed that this measure is highly impactful and meaningful to patients.[168] It stated that according to the National Eye Institute report in 2002, more than half of U.S. residents over 65 years have a cataract.[169] Furthermore, cataracts are a leading cause of blindness, with more than 1.5 million cataract surgeries performed annually to improve the vision of those with cataracts.[170] Unplanned anterior vitrectomy is a recognized adverse intraoperative event during cataract surgery occurring in two to four percent of all cases,[171] with some research showing that rates of unplanned anterior vitrectomy are higher among less experienced surgeons.[172] The MAP continued to state that an anterior vitrectomy, the repair of a rupture in a mainly liquid portion of the eye, is generally an unplanned complication of a cataract surgery.[173] The MAP agreed that this is an outcome measure that fills the workgroup identified priority gap of procedure complications.[174]

The proposed ASC–14 measure is not NQF-endorsed. However, this measure is maintained by the ASC Quality Collaboration,[175] an entity recognized within the community as an expert in measure development for the ASC setting of care. We believe that this measure is appropriate for the measurement of quality care furnished by ASCs, because cataract surgery is commonly performed in ASCs and, as discussed above, complications such as unplanned anterior vitrectomy can signify important issues in the care being provided by ASCs. While the Unplanned Anterior Vitrectomy measure is not NQF endorsed, we believe this measure reflects consensus among affected parties, because the MAP, which represents stakeholder groups, reviewed and conditionally supported the measure for use in the ASCQR Program. The MAP stated that the Unplanned Anterior Vitrectomy measure is ''highly impactful and meaningful to patients'' because cataracts are a leading cause of blindness among Americans and an unplanned anterior vitrectomy is a generally unplanned complication of the surgery intended to help restore patients' vision. Furthermore, we believe the measure is reliable because reliability testing performed by the measure steward found that the difference from originally submitted and re-abstracted vitrectomy rates was zero for 92 percent of ASCs reviewed. Therefore, we believe there is strong evidence that the Unplanned Anterior Vitrectomy measure is reliable.

[161] National Eye Institute. ''Cataracts.'' *Cataracts.* National Institutes of Health, n.d. Available at: *https://www.nei.nih.gov/eyedata/cataract#1.*

[162] ''Measure Application Partnership Hospital Workgroup'', National Quality Forum. Dec. 2014, Transcript. Available at: *http://www.qualityforum.org/ProjectMaterials.aspx?projectID=75369.*

[163] Chen M, Lamattina KC, Patrianakos T, Dwarakanathan S. Complication rate of posterior capsule rupture with vitreous loss during phacoemulsification at a Hawaiian cataract surgical center: A clinical audit. *Clin Ophthamlol.* 2014 Feb 5;8:375–378.

[164] ''Measure Application Partnership Hospital Workgroup'', National Quality Forum. Dec. 2014, Transcript. Available at: *http://www.qualityforum.org/ProjectMaterials.aspx?projectID=75369.*

[165] National Quality Forum. *MAP 2015 Considerations for Selection of Measures for Federal Programs: Hospitals.* Rep. National Quality Forum, Feb. 2015. Available at: *http://www.qualityforum.org/Publications/2015/02/MAP_Hospital_Programmatic_Deliverable_-_Final_Report.aspx.*

[166] National Quality Forum. *List of Measures under Consideration for December 1, 2014.* National Quality Forum, Dec. 2014. Available at: *https://www.qualityforum.org/Setting_Priorities/Partnership/Measures_Under_Consideration_List_2014.aspx.*

[167] National Quality Forum. *MAP 2015 Final Recommendations to HHS and CMS.* Rep. National Quality Forum, Jan. 2015. Available at: *http://www.qualityforum.org/WorkArea/linkit.aspx?LinkIdentifier=id&ItemID=78711.*

[168] Ibid.

[169] Ibid.

[170] Ibid.

[171] Schein OD, Steinberg EP, Javitt JC, et al. Variation in cataract surgery practice and clinical outcomes. *Ophthalmology* 1994;101:1142–1152; Tan JHY and Karawatowski. Phacoemulsification cataract surgery and unplanned anterior vitrectomy—is it bad news?. *Eye.* 2002 March;16:117–120.

[172] Tan JHY and Karawatowski. Phacoemulsification cataract surgery and unplanned anterior vitrectomy—is it bad news? *Eye.* 2002 March;16:117–120.

[173] National Quality Forum. *MAP 2015 Final Recommendations to HHS and CMS.* Rep. National Quality Forum, Jan. 2015. Available at: *http://www.qualityforum.org/WorkArea/linkit.aspx?LinkIdentifier=id&ItemID=78711.*

[174] Ibid.

[175] ASC Quality Collaboration. ''ASC Quality Collaboration.'' Available at: *http://www.ascquality.org/.*

(3) Data Sources

This measure is based on aggregate measure data collected via chart-abstraction by the ASC and submitted via a CMS online data submission tool (that is, QualityNet).

We proposed that the data collection period for the proposed ASC–14 measure would be the calendar year 2 years prior to the applicable payment determination year. For example, for the CY 2020 payment determination, the data collection period would be CY 2018. We also proposed that ASCs submit these data to CMS during the time period of January 1 to May 15 in the year prior to the affected payment determination year. For example, for the CY 2020 payment determination, the submission period would be January 1, 2019 to May 15, 2019. We refer readers to section XIV.D.3.b. of this final rule with comment period for a more detailed discussion of the requirements for data submitted via a CMS online data submission tool.

(4) Measure Calculation

The outcome measured in the proposed ASC–14 measure is the percentage of cataract surgery patients who have an unplanned anterior vitrectomy. The numerator for this measure is all cataract surgery patients who had an unplanned anterior vitrectomy. The denominator is all cataract surgery patients.

(5) Cohort

There are no additional inclusion or exclusion criteria for the proposed ASC–14 measure. Additional methodology and measure development details are available at: *http://www.ascquality.org/qualitymeasures.cfm,* under ''ASC Quality Collaboration Measures Implementation Guide.''

(6) Risk Adjustment

This measure is not risk-adjusted.

We invited public comments on our proposal to adopt the ASC–14: Unplanned Anterior Vitrectomy measure for the CY 2020 payment determination and subsequent years as discussed above.

Comment: Many commenters supported adoption of the proposed ASC–14 measure because cataract surgery is frequently performed in the ASC setting, and adoption of this measure will promote improvement in patient care over time and incentivize ASCs to engage in more quality improvement activities through public reporting of measure performance data. Some commenters asserted this measure has significant potential to reduce the rate of unplanned vitrectomies by encouraging ASCs to arrange mentoring relationships between newer and more senior doctors practicing at the ASC in order to engage in knowledge-sharing and, in turn, improve performance. Commenters also noted there is little burden associated with reporting on the measure, because the patient is still in the ASC when the complication occurs and the patient's ASC record will include the relevant information that will be reported.

Response: We thank the commenters for their support.

Comment: Some commenters did not support adoption of the proposed ASC–14 measure because the commenters believe chart-abstracted measures are too burdensome for ASCs and the measure is not NQF-endorsed. One commenter recommended that CMS focus on higher priority measures that impact a greater number of ASC patients.

Response: In selecting measures for the ASCQR Program, we weigh the relevance and utility of measures against the potential burden to ASCs resulting from the measure's adoption. We refer readers to the CY 2013 OPPS/ASC final rule with comment period (77 FR 68493 through 68494) for a detailed discussion of the priorities we consider for ASCQR Program quality measure selection. While we understand the commenters' concerns regarding the burden of chart-abstracting measures, we believe the benefits of including the measure in the ASCQR Program and publicly reporting unplanned anterior vitrectomy data for use in patient decision-making and incentivizing ASCs to engage in quality improvement efforts to reduce rates of unplanned anterior vitrectomy outweigh the burden associated with collecting aggregate data on patients treated at an ASC.

In addition, as we discuss above, section 1833(t)(17)(C)(i) of the Act does not require that each measure we adopt for the ASCQR Program be endorsed by a national consensus building entity, or the NQF specifically. Further, under section 1833(i)(7)(B) of the Act, section 1833(t)(17)(C)(i) of the Act applies to the ASCQR Program, except as the Secretary may otherwise provide. Under this provision, the Secretary has further authority to adopt non-endorsed measures. While we strive to adopt NQF-endorsed measures when possible, we believe the requirement that measures reflect consensus among affected parties can be achieved in other ways, including through the measure development process, through broad acceptance and use of the measure, and through public comments. As noted in the CY 2017 OPPS/ASC proposed rule (81 FR 45730), ASC–14 is maintained by the ASC Quality Collaboration, an entity recognized within the community as an expert in measure development for the ASC setting. In addition, this measure is already publicly reported as part of the ASC Quality Collaboration's quarterly Quality Report. Furthermore, the MAP, which represents stakeholder groups, reviewed and conditionally supported the measure for use in the ASCQR Program. We therefore believe the measure reflects consensus among affected parties.

We further believe this measure addresses a high-priority concern affecting a large number of ASC patients. As noted previously, cataracts are a leading cause of blindness in the United States. As stated at in the proposed rule (81 FR 45729), each year, approximately 1.5 million patients undergo cataract surgery to improve their vision, and cataract surgery is the most common surgery performed in ASCs. In addition, as stated in the proposed rule (81 FR 45729), the MAP stated that the Unplanned Anterior Vitrectomy measure is ''highly impactful and meaningful to patients'' because cataracts are a leading cause of blindness among Americans and an unplanned anterior vitrectomy is a generally unplanned complication of the surgery intended to help restore patients' vision. While rates of unplanned anterior vitrectomy are relatively low, we believe that the severity of the complications associated with this unplanned procedure, combined with the frequency of cataract surgery in the ASC setting, highlights the importance of tracking and preventing these outcomes for patients treated in the ASC setting.

Comment: One commenter recommended CMS revise the CPT coding for this procedure to distinguish between planned and unplanned anterior vitrectomies rather than adopting a chart-abstracted measure on this issue.

Response: We appreciate the commenter's recommendation to collect unplanned anterior vitrectomy data through a set of modified CPT codes, but believe collecting this measure data through chart abstraction will enable us to provide patients with this data more quickly and without undertaking the time-intensive and resource-intensive process of modifying and implementing modified CPT codes.

After consideration of the public comments we received, we are finalizing our proposal to adopt the ASC–14: Unplanned Anterior Vitrectomy measure for the ASCQR

Program for the CY 2020 payment determination and subsequent years as proposed.

c. ASC–15a–e: Outpatient and Ambulatory Surgery Consumer Assessment of Healthcare Providers and Systems (OAS CAHPS) Survey Measures

(1) Background

Currently, there is no standardized survey available to collect information on the patient's overall experience for surgeries or procedures performed within an ASC. Some ASCs are conducting their own surveys and reporting these results on their Web sites, but there is not one standardized survey in use to assess patient experiences with care in ASCs that would allow valid comparisons across ASCs. Patient-centered experience of care measures are a component of the 2016 CMS Quality Strategy, which emphasizes patient-centered care by rating patient experience as a means for empowering patients and improving the quality of their care.[176] In addition, information on patient experience with care at a provider/facility is an important quality indicator to help providers and facilities improve services furnished to their patients and to assist patients in choosing a provider/facility at which to seek care.

(2) Overview of Measures

The OAS CAHPS Survey was developed as part of HHS' Transparency Initiative to measure patient experiences with ASC care.[177] In 2006, CMS implemented the Hospital CAHPS (HCAHPS) Survey, which collects data from hospital inpatients about their experience with hospital inpatient care (71 FR 48037 through 48039). The HCAHPS Survey, however, is limited to data from patients who receive inpatient care for specific diagnosis-related groups for medical, surgical, and obstetric services; it does not include patients who received outpatient surgical care from ASCs or HOPDs. Throughout the development of the OAS CAHPS Survey, CMS considered the type of data collected for HCAHPS and other existing CAHPS surveys as well as the terminology and question wording to maximize consistency across CAHPS surveys. CMS has developed similar surveys for other settings of care that are currently used in other quality reporting and value-based purchasing programs, such as the Hospital IQR Program (71 FR 68203 through 68204), the Hospital VBP Program (76 FR 26497, 26502 through 26503, and 26510), the ESRD QIP (76 FR 70269 through 70270), the Home Health QRP (80 FR 68709 through 68710), and the Hospice QRP (80 FR 47141 through 47207).

The OAS CAHPS Survey contains 37 questions that cover topics such as access to care, communications, experience at the facility, and interactions with facility staff. The survey also contains two global rating questions and asks for self-reported health status and basic demographic information (race/ethnicity, educational attainment level, languages spoken at home, among others). The basic demographic information captured in the OAS CAHPS Survey are standard AHRQ questions used to develop case-mix adjustment models for the survey. Furthermore, the survey development process followed the principles and guidelines outlined by the AHRQ and its CAHPS® Consortium. The OAS CAHPS Survey received the registered CAHPS trademark in April 2015. OAS CAHPS Survey questions can be found at: *https://oascahps.org/Survey-Materials* under ''Questionnaire.''

We proposed to adopt five survey-based measures derived from the OAS CAHPS Survey for the CY 2020 payment determination and subsequent years: Three OAS CAHPS composite survey-based measures and two global survey-based measures (discussed below). We believe that these survey-based measures will be useful to assess aspects of care where the patient is the best or only source of information, and to enable objective and meaningful comparisons between ASCs. We note that we made similar proposals in the Hospital OQR Program in section XIII.B.5.c. of the proposed rule. The three OAS CAHPS composite survey-based measures are:

- ASC–15a: OAS CAHPS—About Facilities and Staff;
- ASC–15b: OAS CAHPS—Communication About Procedure; and
- ASC–15c: OAS CAHPS—Preparation for Discharge and Recovery.

Each of the three OAS CAHPS composite survey-based measures consists of six or more questions. Furthermore, the two global survey-based measures are:

- ASC–15d: OAS CAHPS—Overall Rating of Facility; and
- ASC–15e: OAS CAHPS—Recommendation of Facility.

The two global survey-based measures are comprised of a single question each and ask the patient to rate the care provided by the ASC and their willingness to recommend the ASC to family and friends. More information about these measures can be found at the OAS CAHPS Survey Web site (*https://oascahps.org*).

The five survey-based measures (MUC IDs: X3697; X3698; X3699; X3702; and X3703) we proposed were included on the CY 2014 MUC list,[178] and reviewed by the MAP.[179] The MAP encouraged continued development of these survey-based measures; however, we note that these measures had not been fully specified by the time of submission to the MUC List.[180] The MAP stated that these are high impact measures that will improve both quality and efficiency of care and be meaningful to consumers.[181] Further, the MAP stated that given that these measures are also under consideration for the Hospital OQR Program, they help to promote alignment across care settings.[182] It also stated that these measures would begin to fill a gap MAP has previously identified for this program including patient-reported outcomes and patient and family engagement.[183] Several MAP workgroup members noted that CMS should consider how these measures are related to other existing ambulatory surveys to ensure that patients and facilities aren't overburdened.[184]

These measures have been fully developed since submission to the MUC List. The survey development process followed the principles and guidelines outlined by the AHRQ[185] and its CAHPS® Consortium[186] in developing a patient experience of care survey, such as: Reporting on actual patient experiences; standardization across the

[176] CMS National Quality Strategy 2016. Available at: *https://www.cms.gov/medicare/quality-initiatives-patient-assessment-instruments/qualityinitiativesgeninfo/downloads/cms-quality-strategy.pdf.*

[177] U.S. Department of Health and Human Services. *HHS Strategic Plan, Strategic Goal 4: Ensure Efficiency, Transparency, Accountability, and Effectiveness of HHS Programs.* Feb. 2016. Available at: *http://www.hhs.gov/about/strategic-plan/strategic-goal-4/index.html*

[178] National Quality Forum. *List of Measures under Consideration for December 1, 2014.* National Quality Forum, Dec. 2014. Available at: *https://www.qualityforum.org/Setting_Priorities/Partnership/Measures_Under_Consideration_List_2014.aspx.*

[179] National Quality Forum. *MAP 2015 Final Recommendations to HHS and CMS.* Rep. National Quality Forum, Jan. 2015. Available at: *http://www.qualityforum.org/WorkArea/linkit.aspx?LinkIdentifier=id&ItemID=78711.*

[180] Ibid.

[181] Ibid.

[182] Ibid.

[183] Ibid.

[184] Ibid.

[185] Agency for Healthcare Research and Quality. ''Principles Underlying CAHPS Surveys.'' Available at: *https://cahps.ahrq.gov/about-cahps/principles/index.html.*

[186] Agency for Healthcare Research and Quality. ''The CAHPS Program.'' Available at: *https://cahps.ahrq.gov/about-cahps/cahps-program/index.html.*

survey instrument, administration protocol, data analysis, and reporting; and extensive testing with consumers. Development also included: Reviewing surveys submitted under a public call for measures; reviewing existing literature; conducting focus groups with patients who had recent outpatient surgery; conducting cognitive interviews with patients to assess their understanding and ability to answer survey questions; obtaining stakeholder input on the draft survey and other issues that may affect implementation; and conducting a field test.

In addition, we received public input from several modes. We published a request for information in the **Federal Register** on January 25, 2013 (78 FR 5460) requesting information regarding publicly available surveys, survey questions, and measures indicating patient experience of care and patient-reported outcomes from surgeries or other procedures for consideration in developing a standardized survey to evaluate the care received in these facilities from the patient's perspective. Stakeholder input was also obtained through communications with a TEP comprised of experts on outpatient surgery, including clinicians, providers, patient advocates, and accreditation organizations. The TEP provided input and guidance on issues related to survey development, and reviewed drafts of the survey throughout development.

After we determined that the survey instrument was near a final form, we tested the effect of various data collection modes (that is, mail-only, telephone-only, or mail with telephone follow-up of nonrespondents) on survey responses. We began voluntary national implementation of the OAS CAHPS Survey in January 2016.[187]

In addition, while the proposed OAS CAHPS Survey-based measures are not currently NQF-endorsed, they will be submitted to the NQF for endorsement under an applicable call for measures in the near future.

In section XIX. of the proposed rule (81 FR 45755 through 45757), for the Hospital VBP Program, we proposed to remove the three Pain Management dimension questions of the HCAHPS Survey from the total Hospital VBP Program performance score. For more information about the pain management questions captured in the HCAHPS Survey and their use in the Hospital VBP Program, we refer readers to section XIX.B.3. of this final rule with comment period.

The OAS CAHPS Survey also contains two questions regarding pain management. We believe pain management is an important dimension of quality, but realize that there are concerns about these types of questions. However, the pain management questions in the OAS CAHPS Survey are very different from those contained in the HCAHPS Survey because they focus on communication regarding pain management rather than pain control and are part of a composite measure focusing on the preparation for discharge and recovery. Specifically, the OAS CAHPS Survey pain management communication questions read:

Q: Some ways to control pain include prescription medicine, over-the-counter pain relievers or ice packs. Did your doctor or anyone from the facility give you information about what to do if you had pain as a result of your procedure?

☐ A1: Yes, definitely.

☐ A2: Yes, somewhat.

☐ A3: No.

Q: At any time after leaving the facility, did you have pain as a result of your procedure?[188]

☐ A1: Yes.

☐ A2: No.

Unlike the HCAHPS pain management questions, which directly address the adequacy of the hospital's pain management efforts, such as prescribing opioids, the OAS CAHPS pain management communication questions focus on the information provided to patients regarding pain management following discharge from an ASC. We continue to believe that pain control is an appropriate part of routine patient care that ASCs should manage and is an important concern for patients, their families, and their caregivers. We also note that appropriate pain management includes communication with patients about pain-related issues, setting expectations about pain, shared decision-making, and proper prescription practices. For these reasons, we proposed to adopt the OAS CAHPS Survey measures as described in this section, including the pain management communication questions, but will continue to evaluate the appropriateness and responsiveness of these questions to patient experience of care and public health concerns. We also welcomed feedback on these pain management communication questions for use in future revisions of the OAS CAHPS Survey.

(3) Data Sources

As discussed in the Protocols and Guidelines Manual for the OAS CAHPS Survey (*https://oascahps.org/Survey-Materials*), the survey has three administration methods: Mail-only; telephone-only; and mixed mode (mail with telephone follow-up of non-respondents). We refer readers to section XIV.D.5. of this final rule with comment period for an in-depth discussion of the data submission requirements associated with the proposed OAS CAHPS Survey measures. To summarize, to meet the OAS CAHPS Survey requirements for the ASCQR Program, we proposed that ASCs contract with a CMS-approved vendor to collect survey data for eligible patients at the ASCs on a monthly basis and report that data to CMS on the ASC's behalf by the quarterly deadlines established for each data collection period. ASCs may elect to add up to 15 supplemental questions to the OAS CAHPS Survey. These could be questions ASCs develop or use from an existing survey. All supplemental questions must be placed after the core OAS CAHPS Survey questions (Questions 1 through 24). The list of approved vendors is available at: *https://oascahps.org*.

We also proposed to codify the OAS CAHPS Survey administration requirements for ASCs and vendors under the ASCQR Program at 42 CFR 416.310(e), and refer readers to section XIV.D.5. of this final rule with comment period for more details. It should be noted that non-discrimination requirements for effective communication with persons with disabilities and language access for persons with limited English proficiency should be considered in administration of the surveys. For more information, we refer readers to: *http://www.hhs.gov/civil-rights*.

We proposed that the data collection period for the OAS CAHPS Survey measures would be the calendar year 2 years prior to the applicable payment determination year. For example, for the CY 2020 payment determination, ASCs would be required to collect data on a monthly basis, and submit this collected data on a quarterly basis, for January 1, 2018–December 31, 2018 (CY 2018).

We further proposed that, as discussed in more detail below, ASCs will be required to survey a random sample of eligible patients on a monthly basis. A list of acceptable random sampling methods can be found in the OAS CAHPS Protocols and Guidelines

[187] Outpatient and Ambulatory Surgery CAHPS Survey. ''National Implementation'' Available at: *https://oascahps.org/General-Information/National-Implementation*.

[188] We note that this question is a control question only used to determine if the facility should have given a patient additional guidance on how to handle pain after leaving the facility. The facility is not scored based on this question.

Manual (*https://oascahps.org/Survey-Materials*). We also proposed that ASCs would be required to collect at least 300 completed surveys over each 12-month reporting period (an average of 25 completed surveys per month). We acknowledge that some smaller ASCs may not be able to collect 300 completed surveys during a 12-month period; therefore, we proposed an exemption for facilities with lower patient censuses. ASCs would have the option to submit a request to be exempted from performing the OAS CAHPS Survey if they treat fewer than 60 survey-eligible patients during the year preceding the data collection period. We refer readers to section XIV.B.4.c.(6) of this final rule with comment period for details on this proposal. However, we believe it is important to capture patients' experience of care at ASCs. Therefore, except as discussed in section XIV.B.4.c.(6) of this final rule with comment period, below, we also proposed that smaller ASCs that cannot collect 300 completed surveys over a 12-month reporting period will only be required to collect as many completed surveys as possible during that same time period, with surveying all eligible patients (that is, no sampling). For more information regarding these survey administration requirements, we refer readers to the OAS CAHPS Survey Protocols and Guidelines Manual (*https://oascahps.org/Survey-Materials*).

Furthermore, we proposed that ASC eligibility to perform the OAS CAHPS Survey would be determined at the individual ASC level. In other words, an individual ASC that meets the exemption criteria outlined in section XIV.B.4.c.(6) of this final rule with comment period, below, may submit a participation exemption request form, regardless of whether it operates under an independent CCN or shares a CCN with other facilities. CMS will then assess that ASC's eligibility for a participation exemption due to facility size independent of any other facilities sharing its CCN. However, all data collection and submission, and ultimately, also public reporting, for the OAS CAHPS Survey measures would be at the CCN level. Therefore, the reporting for a CCN would include all eligible patients from all eligible ASCs covered by the CCN.

(4) Measure Calculations

As noted above, we proposed to adopt three composite OAS CAHPS Survey-based measures (ASC–15a, ASC–15b, and ASC–15c) and two global survey-based measures (ASC–15d and ASC–15e). An ASC's performance for a given payment determination year will be based upon the successful submission of all required data in accordance with the data submission requirements discussed in section XIV.D.5. of this final rule with comment period. Therefore, ASCs' scores on the OAS CAHPS Survey-based measures, discussed below, will not affect whether they are subject to the 2.0 percentage point payment reduction for ASCs that fail to meet the reporting requirements of the ASCQR Program. These measure calculations will be used for public reporting purposes only.

(A) Composite Survey-Based Measures

ASC rates on each composite OAS CAHPS Survey-based measure would be calculated by determining the proportion of ''top-box'' responses (that is, ''Yes'' or ''Yes Definitely'') for each question within the composite and averaging these proportions over all questions in the composite measure. For example, to assess ASC performance on the composite measure ASC–15a: OAS CAHPS—About Facilities and Staff, we would calculate the proportion of top-box responses for each of the measure's six questions, add those proportions together, and divide by the number of questions in the composite measure (that is, six).

As a specific example, we take an ASC that had 50 surveys completed and received the following proportions of ''top-box'' responses through sample calculations:

- 25 ''top-box'' responses out of 50 total responses on Question One
- 40 ''top-box'' responses out of 50 total responses on Question Two
- 50 ''top-box'' responses out of 50 total responses on Question Three
- 35 ''top-box'' responses out of 50 total responses on Question Four
- 45 ''top-box'' responses out of 50 total responses on Question Five
- 40 ''top-box'' responses out of 50 total responses on Question Six

Based on the above responses, we would calculate that facility's measure score for public reporting as follows:

$$\text{ASC Publicly Reported Score} = \frac{(0.5 + 0.8 + 1 + 0.7 + 0.9 + 0.8)}{6}$$

This calculation would give this example ASC a raw score of 0.78 or 78 percent for the ASC–15a measure for purposes of public reporting. We note that each percentage would then be adjusted for differences in the characteristics of patients across ASCs as described in section XIV.B.4.c.(7) of this final rule with comment period. As a result, the final ASC percentages may vary slightly from the raw percentage as calculated in the example above.

(B) Global Survey-Based Measures

We also proposed to adopt two global OAS CAHPS Survey measures. ASC–15d asks the patient to rate the care provided by the ASC on a scale of 0 to 10, and ASC–15e asks about the patient's willingness to recommend the ASC to family and friends on a scale of ''Definitely No'' to ''Definitely Yes.''

ASC performance on each of the two global OAS CAHPS Survey-based measures would be calculated by proportion of respondents providing high-value responses (that is, a 9–10 rating or ''Definitely Yes'') to the survey questions over the total number of respondents. For example, if an ASC received 45 9- and 10-point ratings out of 50 responses, this ASC would receive a 0.9 or 90 percent raw score, which would then be adjusted for differences in the characteristics of patients across ASCs as described in section XIV.B.4.c.(7) of this final rule with comment period, for purposes of public reporting.

(5) Cohort

The OAS CAHPS Survey is administered to all eligible patients—or a random sample thereof—who had at least one outpatient surgery/procedure during the applicable month. Eligible patients, regardless of insurance or method of payment, can participate. For purposes of each survey-based measure captured in the OAS CAHPS Survey, an ''eligible patient'' is a patient 18 years or older:

- Who had an outpatient surgery or procedure in an ASC, as defined in the OAS CAHPS Survey administration manual (*https://oascahps.org/Survey-Materials*);
- Who does not reside in a nursing home;

- Who was not discharged to hospice care following their surgery;
- Who is not identified as a prisoner; and
- Who did not request that ASCs not release their name and contact information to anyone other than ASC personnel.

There are a few categories of otherwise eligible patients who are excluded from the measure as follows:

- Patients whose address is not a U.S. domestic address;
- Patients who cannot be surveyed because of State regulations;
- Patient's surgery or procedure does not meet the eligibility CPT or G-codes as defined in the OAS CAHPS Survey Protocols and Guidelines Manual (*https://oascahps.org/Survey-Materials*) (referred to in the proposed rule as the ''OAS CAHPS Survey Manual administration manual''); and
- Patients who are deceased.

(6) Exemption

We understand that facilities with lower patient censuses may be disproportionately impacted by the burden associated with administering the survey and the resulting public reporting of OAS CAHPS Survey results. Therefore, we proposed that ASCs may submit a request to be exempted from performing the OAS CAHPS Survey-based measures if they treat fewer than 60 survey-eligible patients during the ''eligibility period,'' which is the calendar year before the data collection period. For example, for the CY 2020 payment determination, this exemption request would be based on treating fewer than 60 survey-eligible patients in CY 2017, which is the calendar year before the data collection period (CY 2018) for the CY 2020 payment determination. All exemption requests will be reviewed and evaluated by CMS.

To qualify for the exemption, we proposed that ASCs must submit a participation exemption request form, which will be made available on the OAS CAHPS Survey Web site (*https://oascahps.org*) on or before May 15 of the data collection year. For example, the deadline for submitting an exemption request form for the CY 2020 payment determination would be May 15, 2018. We determined the May 15 deadline in order to align with the deadline for submitting Web-based measures, and because we believe this deadline allows ASCs sufficient time to review the previous years' patient lists and determine whether they are eligible for an exemption based on patient population size.

We note that ASCs with fewer than 240 Medicare claims (Medicare primary and secondary payer) per year during an annual reporting period for a payment determination year are not required to participate in the ASCQR Program for the subsequent annual reporting period for that applicable payment determination year (42 CFR 416.305(c)). For example, an ASC as identified by National Provider Identifier (NPI) with fewer than 240 Medicare claims in CY 2017 (for the CY 2019 payment determination year) would not be required to participate in the ASCQR Program in CY 2018 (for the CY 2020 payment determination year).

In addition, as discussed above, ASC eligibility to perform the OAS CAHPS Survey would be determined at the individual ASC level. In other words, an individual ASC that meets the exemption criteria outlined in section XIV.B.4.c.(6) of this final rule with comment period, below, may submit a participation exemption request form, regardless of whether it operates under an independent CCN or shares a CCN with other facilities. However, all data collection and submission, and ultimately, also public reporting, for the OAS CAHPS Survey measures would be at the CCN level. Therefore, the reporting for a CCN would include all eligible patients from all eligible ASCs covered by the CCN.

(7) Risk Adjustment

In order to achieve the goal of fair comparisons across all ASCs, we believe it is necessary and appropriate to adjust for factors that are not directly related to ASC performance, such as patient case-mix, for these OAS CAHPS Survey measures. The survey-based measures are adjusted for patient characteristics such as age, education, overall health status, overall mental health status, type of surgical procedure, and how well the patient speaks English. These factors influence how patients respond to the survey, but are beyond the control of the ASC and are not directly related to ASC performance. For more information about risk adjustment for these measures, we refer readers to: *https://oascahps.org/General-Information/Mode-Experiment*.

(8) Public Reporting

We will propose a format and timing for public reporting of OAS CAHPS Survey data in future rulemaking prior to implementation of the measures. Because CY 2016 is the first year of voluntary national implementation for the OAS CAHPS Survey, and we believe using data from this voluntary national implementation will help inform the displays for public reporting of OAS CAHPS Survey data for the ASCQR Program, we did not propose a format or timing for public reporting of OAS CAHPS Survey data in the proposed rule.

As currently proposed, ASCs that share the same CCN must combine data for collection and submission for the OAS CAHPS Survey across their multiple facilities. These results would then be publicly reported on the *Hospital Compare* Web site as if they apply to a single ASC. To increase transparency in public reporting and improve the usefulness of the *Hospital Compare* Web site, we intend to note on the Web site instances where publicly reported measures combine results from two or more ASCs.

We invited public comments on our proposals as discussed above to adopt for the CY 2020 payment determination and subsequent years, the five survey-based measures: (1) ASC–15a: Outpatient and Ambulatory Surgery Consumer Assessment of Healthcare Providers and Systems (OAS CAHPS)—About Facilities and Staff; (2) ASC–15b: OAS CAHPS—Communication About Procedure; (3) ASC–15c: OAS CAHPS—Preparation for Discharge and Recovery; (4) ASC–15d: OAS CAHPS—Overall Rating of Facility; and (5) ASC–15e: OAS CAHPS—Recommendation of Facility.

Comment: Many commenters supported adoption of the proposed ASC–15a–e survey-based measures based on an understanding that these measures capture patient experience of care data, apply to ASCs broadly, and are also proposed for adoption in the ASCQR Program. Some commenters noted adopting these measures will establish a baseline for standardized collection of patient experience of care data, and allow for meaningful comparisons across ASCs on patient experience of care. Commenters also noted that the ASC–15a–e survey-based measures are important quality indicators that can be used in combination with other measures to assist patients in deciding where to seek care. One commenter expressed specific support for the inclusion of risk-adjustment factors in the OAS CAHPS Survey-based measures.

Response: We thank the commenters for their support.

Comment: One commenter requested additional information regarding the OAS CAHPS Survey development process.

Response: As discussed in the CY 2017 OPPS/ASC proposed rule (for example, 81 FR 45730 through 45732), background on the OAS CAHPS Survey, including the survey development process, is publicly available on the

OAS CAHPS Web site: *http://oascahps.org/*. The OAS CAHPS Survey development process followed the principles and guidelines outlined by the AHRQ [189] and its CAHPS Consortium [190] in developing a patient experience of care survey, such as: Reporting on actual patient experiences; standardization across the survey instrument; administration protocol; data analysis and reporting; and extensive testing with consumers. This process included reviewing existing literature; reviewing surveys submitted under a public call for measures; conducting focus groups with patients who had recent outpatient surgery; conducting cognitive interviews with patients to assess their understanding and ability to answer survey questions; obtaining stakeholder input on the draft survey and other issues that may affect implementation; conducting a field test; and conducting a test of the various data collection mode effects on survey responses.

We published a request for information on January 25, 2013 (78 FR 5459) requesting information regarding publicly available surveys, survey questions, and measures indicating patient experience of care and patient-reported outcomes from surgeries or other procedures for consideration in developing a standardized survey to evaluate the care received in these facilities from the patient's perspective. In 2013 and 2014, we conducted six focus groups with patients who had recent outpatient surgeries or procedures in a hospital outpatient department or ASC. Analysis of the focus group feedback [191] led to development of the final domain structure for the survey, and identified the following topic areas for assessment under a patient experience of care survey for these procedures: (1) Preparations for surgery; (2) check-in process; (3) facility environment; (4) staff communication; (5) discharge; (6) recovery and outcomes; and (7) overall experience.

We convened and consulted with two TEPs throughout the development and testing of the OAS CAHPS Survey.[192] In 2013, we established a 10-member TEP consisting of experts on outpatient surgery, including clinicians, providers, patient advocates, and representatives from other stakeholder organizations to provide preliminary guidance in the establishment of relevant topics and to comment on the draft versions for cognitive testing and the field test. Information about the TEP was documented in materials supporting an information collection request for the voluntary national implementation of the OAS CAHPS Survey published in the **Federal Register** (80 FR 2430 through 2431).[193] We established a second TEP in 2015 to solicit input and guidance related to national implementation protocols and the survey mode experiment.

We conducted three rounds of cognitive testing among patients who received outpatient surgery at an ASC or hospital outpatient department before finalizing the field test version of the OAS CAHPS Survey. With each round of testing, we modified the survey to reflect the comments from the previous round.

The survey was tested in both the outpatient and ASC setting in 2014 (field testing) and 2015 (mode testing) and found to be reliable. We refer readers to 80 FR 2430 and the OAS CAHPS Information Collection Request Paperwork Reduction Act Package [194] for more information about field and mode testing for these measures. The field test collected data through a mixed-mode design, which consisted of a mail survey with telephone follow-up of non-respondents. We recruited a total of 36 facilities for the field test: 18 Hospital outpatient departments and 18 ASCs. Approximately 116 patient records were selected from each of the 36 facilities, for a total sample of 4,179 patients. The field test data collection yielded a 46 percent adjusted response rate, or 1,863 completed surveys (31 percent computer-assisted telephone interviewing, 68 percent mail, and 0.8 percent break-offs). Once partial surveys were removed from the analysis set, 1,849 total surveys were used in the evaluation. The field test data were evaluated and analyzed to identify item-level refinements necessary for the survey instrument. The field test psychometric analysis included evaluations of individual items and composite item sets. Individual items were analyzed to report item-level missing data and item response distributions (including ceiling and floor effects), which included response variance. Composite item sets were analyzed using factor analysis and item response theory (IRT) analysis to assess dimensionality, discriminability, dimensional coverage, and subgroup response differences. Internal consistency statistics (reliability) and correlational checks for composite validity were performed to evaluate the final composite item sets. The item-level recommendations for the field test were based on the findings from the factor analyses, the internal consistency checks, and the IRT analysis. As a result, 10 questions were recommended for deletion. Reliability of the remaining measures was assessed using the Cronbach's alpha coefficient, with an estimate range from zero to one. An estimate of zero indicated no measurement consistency and one indicates perfect consistency. The cutoff criterion for the examination was 0.70, which indicated adequate consistency.[195] The composites analytically derived maintained adequate internal consistency even when reduced to Top-Box scoring and across the facility types and modes of administration.

In 2015, we conducted a mode experiment for the OAS CAHPS Survey. We refer readers to *https://oascahps.org/General-Information/Mode-Experiment* for more details. The facility sample included hospital outpatient departments and ASCs that reflect industry characteristics and was sorted to achieve implicit stratification by four facility characteristics: Single specialty or multispecialty; facility size (large, medium, or small), facility location (urban or rural), and facility ownership (public, private, or other). A total of 70 facilities (38 hospital outpatient departments and 32 ASCs) participated in the mode experiment by providing a monthly patient information file for patients served during one or more of the three sample months (July, August, and September 2015). The patient sample consisted of 13,576 patients who had an eligible surgery or procedure during a sample month and who met other survey eligibility criteria.

[189] Agency for Healthcare Research and Quality. ''Principles Underlying CAHPS Surveys.'' Available at: *https://cahps.ahrq.gov/about-cahps/principles/index.html*.

[190] Agency for Healthcare Research and Quality. ''The CAHPS Program.'' Available at: *https://cahps.ahrq.gov/about-cahps/cahps-program/index.html*.

[191] Hospital Outpatient Surgery Department/Ambulatory Surgery Center Experience of Care Survey Focus Group Report (Submitted to CMS June 2013).

[192] Information about feedback from the first TEP was documented in the **Federal Register** at 80 FR 2430 (See Section A.1 of the Supporting Statement).

[193] Available at: *https://www.cms.gov/Regulations-and-Guidance/Legislation/PaperworkReductionActof1995/PRA-Listing-Items/CMS-10500.html*.

[194] OMB Control Number 0938–1240, ''Consumer Assessment of Healthcare providers and Systems Outpatient and Ambulatory Surgery (OAS CAHPS) Survey (CMS–10500).'' Available at: *https://www.reginfo.gov/public/do/PRAViewICR?ref_nbr=201510-0938-003*.

[195] Aron, A. and Aron, E.N. *Statistics for Psychology*. (1999) 2nd ed. New Jersey: Prentice Hall.

Data collection for each sample month began approximately 21 days after the sample month closed and ended within a 6-week period after the survey was initiated. The overall response rate (for all three modes) was 39 percent. The response rate for the mail-only mode was 37 percent, the telephone-only response rate was 34 percent, and the mixed-mode response rate was 50 percent.

We began voluntary national implementation of the OAS CAHPS Survey in January 2016 and refer readers to *https://oascahps.org/General-Information/National-Implementation* for more details. Preliminary data from the voluntary reporting period (Quarter 1 data), which included 24,201 sampled patients from 74 facilities, indicate a response rate of 33 percent for both telephone and mail modes. Voluntary national implementation is ongoing.

Comment: Some commenters did not support adoption of the proposed ASC–15a–e survey-based measures because these measures have not been endorsed by a consensus-based measurement evaluation body. The commenters asserted that moving forward with the non-endorsed measures could result in publication of unreliable measure scores, and urged CMS to delay implementation of these measures until NQF endorsement is received. One commenter recommended CMS implement the OAS CAHPS Survey in the Hospital OQR Program first to demonstrate its reliability before requiring ASCs to implement the survey.

Response: We note that section 1833(t)(17)(C)(i) of the Act does not require that each measure we adopt for the ASCQR Program be endorsed by a national consensus building entity, or the NQF specifically. Further, under section 1833(i)(7)(B) of the Act, section 1833(t)(17)(C)(i) of the Act applies to the ASCQR Program, except as the Secretary may otherwise provide. Under this provision, the Secretary has further authority to adopt non-endorsed measures. While we strive to adopt NQF-endorsed measures when possible, we believe the requirement that measures reflect consensus among affected parties can be achieved in other ways, including through the measure development process, through broad acceptance and use of the measure, and through public comments. As discussed in the measure description above, the MAP has reviewed the measure.

In addition, we received public input from several modes. We published a request for information in the **Federal Register** on January 25, 2013 (78 FR 5460) requesting information regarding publicly available surveys, survey questions, and measures indicating patient experience of care and patient-reported outcomes from surgeries or other procedures for consideration in developing a standardized survey to evaluate the care received in these facilities from the patient's perspective. As stated in more detail above, stakeholder input was also obtained through communications with a TEP comprised of experts on outpatient surgery, including clinicians, providers, patient advocates, and accreditation organizations. The TEP provided input and guidance on issues related to survey development, and reviewed drafts of the survey throughout development. Given these consensus-building efforts, we believe the measure reflects consensus among affected parties for a standardized instrument assessing patients' experience of care in the ASC setting. As such, we do not think it is necessary to delay implementation of the OAS CAHPS Survey until it achieves NQF endorsement. We also believe it is unnecessary to delay implementation of the OAS CAHPS Survey in the ASC setting until its reliability is demonstrated in the hospital outpatient department setting, because the survey was tested in both settings in 2014 (field testing) and 2015 (mode testing) and found to be reliable, as discussed above and again below. We also note, however, that we intend to submit the OAS CAHPS Survey-based measures to NQF for endorsement under an applicable call for measures in the near future.

We also disagree with the commenters' assertion that moving forward with a non-endorsed measure could result in publication of unreliable measure scores. The survey was tested in both the outpatient and ASC setting in 2014 (field testing) and 2015 (mode testing) and found to be reliable. We refer readers to *https://oascahps.org/* for more information about field and mode testing for these measures. The OAS CAHPS Survey development process followed the principles and guidelines outlined by AHRQ and its CAHPS Consortium.[196] This process included reviewing existing literature; reviewing surveys submitted under a public call for measures; conducting focus groups with patients who had recent outpatient surgery; conducting cognitive interviews with patients to assess their understanding and ability to answer survey questions; obtaining stakeholder input on the draft survey and other issues that may affect implementation; conducting a field test; and conducting a test of the various data collection mode effects on survey responses.

In 2014, the field test data were evaluated and analyzed to identify item-level refinements necessary for the survey instrument. The field test psychometric analysis included evaluations of individual items and composite item sets. Individual items were analyzed to report item-level missing data and item response distributions (including ceiling and floor effects), which included response variance. Composite item sets were analyzed using factor analysis and item response theory (IRT) analysis to assess dimensionality, discriminability, dimensional coverage, and subgroup response differences. Internal consistency statistics (reliability) and correlational checks for composite validity were performed to evaluate the final composite item sets. The item-level recommendations for the field test were based on the findings from the factor analyses, the internal consistency checks, and the IRT analysis. As a result, 10 questions were recommended for deletion. Reliability of the remaining measures was assessed using the Cronbach's alpha coefficient, with an estimate range from zero to one. An estimate of zero indicated no measurement consistency and one indicates perfect consistency. The cutoff criterion for the examination was 0.70, which indicated adequate consistency.[197] The composites analytically derived maintained adequate internal consistency even when reduced to Top-Box scoring and across the facility types and modes of administration.

Based on the rigorous testing that was undertaken during the development process, we believe the OAS CAHPS Survey, and measure scores derived therefrom, are both reliable and valid. Therefore, we believe it is unnecessary to delay implementation of the OAS CAHPS Survey in the ASC setting.

Comment: Many commenters asserted that requiring ASCs to meet the proposed target minimum number of surveys (that is, 300 completed surveys) would be difficult for participating ASCs because they are small businesses and implementing a high target minimum will require ASCs to ramp up quickly to administer the OAS CAHPS Survey. Other commenters stated that past experience with facility-specific surveys indicates ASCs will experience

[196] Agency for Healthcare Research and Quality. ''The CAHPS Program.'' Available at: *https://ahrq.gov/cahps/index.html.*

[197] Aron, A. and Aron, E.N. *Statistics for Psychology.* (1999) 2nd ed. New Jersey: Prentice Hall.

low completion rates on the OAS CAHPS Survey. The commenters therefore recommended CMS consider lowering this target minimum or, in the alternative, consider implementing scaled target minimums based on facility size. A number of commenters recommended that the target minimum instead be set at 100 completed surveys, in alignment with the requirements from the first year of the HCAHPS Survey's use in the inpatient setting. One commenter recommended CMS assess ASCs' performance based on the number of surveys sent to patients. A number of commenters recommended that CMS increase the threshold for an exception to administering the OAS CAHPS Survey based on a small patient population from 60 survey-eligible patients to 100 survey eligible-patients in the year preceding the performance period.

Other commenters recommended that CMS remove the proposed 60 survey-eligible patient threshold from the OAS CAHPS Survey proposals. The commenters noted an ASC is exempt from the requirements of the ASCQR Program if it submits fewer than 240 Medicare primary and secondary claims per year, and requested CMS clarify the circumstances under which this proposal would exclude an ASC eligible to participate in the ASCQR Program from the requirement to administer the OAS CAHPS Survey.

Two commenters asserted that comparing an ASC with a small patient population to a sample of a much larger ASC's population may weaken the statistical reliability of the survey results and comparability of facilities' scores.

Response: We are committed to ensuring high reliability in publicly reported OAS CAHPS Survey results. To make abundantly clear our policies discussed in the proposed rule, ASCs will fall into one of three categories based on their past and projected total patient volume. In order to determine its projected total patient volume, we recommend ASCs review their accounts receivable and payable records. From these accounting documents, a facility can determine its past patient volume and project future patient volume. Acceptable methods of sampling survey-eligible patients can be found in Chapter IV-Sampling Procedures of the Protocols and Guidelines Manual at *https://oascahps.org/Survey-Materials*.

The first category includes ASCs that estimate receiving more than 300 completed surveys during the 12-month reporting period based on its past and projected total patient volume. We note that in the proposed rule (81 FR 45732), we stated that ''ASCs will be required to survey a random sample of eligible patients on a monthly basis.'' We also note that elsewhere in the proposed rule (81 FR 45733), we also stated that, ''the OAS CAHPS Survey is administered to all eligible patients—or a random sample thereof—who had at least one outpatient surgery/procedure during the applicable month.'' We recognize that the language is confusing and are clarifying here that ASCs that anticipate receiving more than 300 surveys have a choice. They are required to either: (1) randomly sample their eligible patient population, or (2) survey their entire OAS CAHPS eligible patient population. In other words, random sampling is optional.

We calculated the number 300 by using the reliability criterion for the OAS CAHPS Survey measures, which is 0.8 or higher.[198] This which requires facilities with large patient populations to randomly sample a sufficient number of patients to yield at least 300 completed surveys over each 12-month reporting period. This criterion allows at least 80 percent power to detect a 10 percent difference for binary survey outcome at the 0.05 significance level.[199] A reliability criterion of 0.8 is the normal standard for random sample surveys.[200] The 300 completed surveys translates into approximately 25 completed surveys per month (25 completes × 12 months = 300 completes per year). At this time, there are no plans to adjust the threshold of the target minimum of 300 completed surveys for the OAS CAHPS Survey for larger facilities that have the option to undertake random sampling. To do so could decrease the reliability of the OAS CAHPS survey results. Survey data will be collected on a monthly basis and uploaded on a quarterly basis. Survey vendors will report the ''total patient volume,'' ''total eligible patients,'' ''number of patients sampled,'' and the ''number of completed surveys'' for each reporting period.[201] These reported patient data will be used to ensure sampling requirements are followed.

Second, if an ASC does not anticipate receiving 300 completed surveys during the 12-month reporting period based on its past and projected total patient volume, it must survey all eligible patients served during the reporting period. In other words, these smaller facilities must undertake a census of all eligible patients served; there is no option to randomly sample. Smaller facilities' OAS CAHPS survey results are not affected by the reliability issues underlying the target minimum policy because conducting a census—surveying all eligible patients in a population, as opposed to sampling and administering the survey to a portion of that eligible patient population—measures the true value of the patient population by including all eligible patients at the facility in the survey population. However, we will continue to review the data from the voluntary implementation to identify and address any issues related to the reliability and comparability of OAS CAHPS Survey-based measure rates across facilities. Thus, the OAS CAHPS results for the larger facilities and the smaller facilities both achieve the statistical precision of the reliability criterion. For example, if two different facilities with large patient volumes in a particular year both randomly sample their eligible patients and receive 300 completed surveys, they would both have met the reliability criterion during that year. If in a particular year one facility estimates it will receive more than 300 completed surveys in that year and samples and obtains 300 completed surveys while, during that same year, a different facility does not anticipate receiving 300 completed surveys and undertakes a census of its entire survey-eligible patients, both facilities would achieve the statistical precision of the reliability criterion for that year. As a third example, for a facility that obtained 300 completed surveys from their 1500 total eligible patients served in one year, but experienced a change in patient volume during the next year and surveyed their entire 200 total eligible patients served the next year, the facility would have met the reliability criterion during both years.

Third, if in the prior year an ASC serves less than 60 survey eligible patients, the facility can request an exemption from the OAS CAHPS Survey administration requirement because these few surveys would not provide reliable data and the burden associated with administering the survey as well as the resulting public reporting of OAS CAHPS Survey results would be disproportionately burdensome. At this time, there are no plans to adjust the threshold for the exemption. This request and related deadlines will be available on the OAS CAHPS Survey Web site (*https://oascahps.org*) on or before May 15 of the

[198] Cohen, Jacob. 1977. Statistical Power Analysis for the Behavioral Sciences. New York: Academic Press.

[199] Ibid.

[200] Ibid.

[201] Outpatient and Ambulatory Surgery CAHPS Survey: ''Protocol and Guidelines Manual.'' Available for download at: *https://oascahps.org/Survey-Materials*.

data collection calendar year as discussed in the proposed rule (81 FR 45733).

However, we agree with the commenters that the proposed 60 survey-eligible patient threshold is unlikely to exclude ASCs that would otherwise be eligible for the ASCQR Program from the OAS CAHPS Survey administration requirements. As noted by commenters, ASCs with fewer than 240 Medicare claims (Medicare primary and secondary payer) per year during an annual reporting period for a payment determination year are not required to participate in the ASCQR Program for the subsequent annual reporting period for that applicable payment determination year (42 CFR 416.305(c)). Therefore, it is unlikely that an ASC would qualify for an exemption from the OAS CAHPS Survey without also being exempted from the ASCQR Program. However, this would also likely be the case if we adopted a 100 survey-eligible patient threshold. We currently lack data regarding the interaction between the ASCQR Program's programmatic threshold and the OAS CAHPS Survey's survey-eligible patient threshold. Because it may be possible for an ASC to treat enough patients to be eligible for the ASCQR Program but not treat 60 survey-eligible patients, we believe it is appropriate to maintain the OAS CAHPS Survey administration threshold at this time. To be clear, an ASC that would not need to report data for any measures in the ASCQR Program if it has less than 240 Medicare claims (Medicare primary and secondary payer) in the year prior to the data collection year for the applicable payment determination, would also not be required to submit a participation exemption request form or administer the OAS CAHPS Survey for the same time period.

The facility-level data for both large and small facilities will be adjusted to account for patient characteristics that impact response tendencies (that is, patient-mix) and ensure fair comparisons across all facilities. As discussed in the CY 2017 OPPS/ASC proposed rule (81 FR 45720), the survey-based measures are adjusted for patient characteristics such as age, education, overall health status, overall mental health status, type of surgical procedure, and how well the patient speaks English. We refer readers to the Protocols and Guidelines Manual, available at: *https://oascahps.org/Survey-Materials* for information regarding the patient-mix adjustment methodology. However, we do not adjust for facility-level characteristics that are under control of the facility, for example, specialty or geographic location. During the voluntary implementation of the survey, we will continue to review the data collected to identify and address any issues related to the reliability and comparability of measure rates across facilities as appropriate. In addition, we believe the proposed 60 survey-eligible patient exemption policy appropriately balances the benefit of ensuring that patient experience of care data is collected and publicly reported for use by patients in making decisions about their health care against the burden of requiring facilities to administer the OAS CAHPS Survey. For this reason, we do not believe it would be appropriate to increase the exemption threshold at this time.

Comment: A number of commenters did not support adoption of the proposed OAS CAHPS Survey-based measures due to the administrative and financial burdens associated with implementing the OAS CAHPS Survey. The commenters asserted that ASCs, as small businesses, cannot afford the staff needed to gather the required measure data, and that diverting available resources to address these reporting requirements may result in diminishing quality of care for ASCs' patients or cause ASCs to withdraw from the ASCQR Program. One commenter noted that ASCs are already paid at lower rates than hospital outpatient departments for the same procedures and this requirement would further reduce ASCs' resources available for quality improvement activities. Commenters asserted that most ASCs will treat more than 60 but fewer than 300 survey-eligible patients in a given year, and as a result, smaller ASCs will incur significant costs to administer the survey and receive far fewer completed surveys than the target minimum.

Response: In selecting measures for the ASCQR Program, we weigh the relevance and utility of measures against the potential burden to ASCs resulting from the measure's adoption. We refer readers to the CY 2013 OPPS/ASC final rule with comment period for a discussion of our considerations in the selection of ASCQR Program quality measures (77 FR 68493 through 68494). While we understand the commenters' concerns regarding the administrative and financial burdens associated with implementing the OAS CAHPS Survey and OAS CAHPS Survey-based measures in the ASCQR Program, we believe the benefits of capturing patient experience of care data in the ASC setting outweigh the administrative burden associated with administering the survey. We are dedicated to improving the quality of care provided to patients, and believe patients are a vital source of information in assessing the quality of care provided at an ASC.

Furthermore, collection of the patient's perspectives of care data is similar for other CAHPS surveys, such as the Home Health Care CAHPS (HHCAHPS) Survey,[202] In-Center Hemodialysis CAHPS (ICH CAHPS),[203] and Hospice CAHPS.[204] ASCs would follow the same model where providers contract with approved survey vendors for the data collection and implementation of the survey. We post the list of the approved OAS CAHPS vendors on *https://oascahps.org*, and we encourage ASCs to contact vendors for cost and service information pertaining to OAS CAHPS as there may be differences among vendors. In addition, as discussed in the proposed rule (81 FR 45737), the survey has three administration methods: mail-only; telephone-only; and mixed mode (mail with telephone follow-up of non-respondents). We refer readers to the Protocols and Guidelines Manual for the OAS CAHPS Survey (*https://oascahps.org/Survey-Materials*) for materials for each mode of survey administration. While ASCs/vendors must make multiple attempts to contact eligible patients unless the patient refuses or the ASC/vendor learns that the patient is ineligible to participate in the survey, ASCs/vendors may conduct the OAS CAHPS survey in one or more of the survey modes of telephone only, mail only, or mail with telephone follow-up. We note that generally, the mail only mode is the most economical choice.

Comment: Some commenters noted that many ASCs already have a different survey in place to assess patient satisfaction and quality of care, and stated their belief that adding another survey requiring the ASC to contract with a third party vendor would not improve the quality control measures already in place at the ASC. One commenter requested clarification as to whether ASCs may continue to administer their own facility-specific patient experience of care surveys using the same tools and administration

[202] Home Health Care CAHPS Survey: ''Protocol and Guidelines Manual.'' Available for download at: *https://homehealthcahps.org/Portals/0/PandGManual.pdf.*

[203] In-Center Hemodialysis CAHPS Survey: ''Protocol and Guidelines Manual.'' Available for download at: *https://ichcahps.org/Portals/0/ICH_SurveyAdminManual.pdf.*

[204] Hospice CAHPS Survey: ''Quality Assurance Guidelines.'' Available for download at: *http://www.hospicecahpssurvey.org/en/quality-assurance-guidelines/.*

methods they use now if the ASC–15a-e survey-based measures are finalized.

Response: Currently, there is no standardized survey available to collect information on the patient's overall experience for surgeries or procedures performed within an ASC. Some ASCs are conducting their own surveys and reporting these results on their Web sites, but there is not one standardized survey in use to assess patient experiences with care in ASCs that would allow valid comparisons across ASCs. Patient-centered experience of care measures are a component of the 2016 CMS Quality Strategy, which emphasizes patient-centered care by rating patient experience as a means for empowering patients and improving the quality of their care.[205]

Through inclusion in the ASCQR Program and public reporting of survey results, both ASCs and patients will be able to learn. ASCs can assess their own quality and see how their quality compares to other ASCs, and patients can compare measures and make informed decisions about their healthcare. We believe this provides additional incentives for ASCs to engage in quality improvement activities.

While an ASC may continue to administer its own facility-specific patient experience of care survey, that survey administration would not satisfy the requirements of the ASC–15a-e survey-based measures. In order to meet the survey administration requirements for these measures, the ASC must administer the OAS CAHPS Survey in accordance with the requirements listed in the OAS CAHPS Survey Protocols and Guidelines Manual.[206]

We encourage ASCs to consider adding specific questions of interest to the OAS CAHPS Survey instead, rather than administering a second, standalone, survey to patients. As noted in the CY 2017 OPPS/ASC proposed rule (81 FR 45732), ASCs may elect to add up to 15 supplemental questions to the OAS CAHPS Survey. These could be questions ASCs develop specifically for use alongside the OAS CAHPS Survey, or questions from an existing survey. All supplemental questions must be placed after the core OAS CAHPS Survey questions (Questions 1 through 24).

Comment: Another commenter suggested that CMS delay public reporting of ASC measure rates for at least one year to allow ASCs to become familiar with the measures and survey administration.

Response: As stated in the CY 2017 OPPS/ASC proposed rule (81 FR 45728), this measure was proposed for the CY 2020 payment determination and subsequent years. Therefore, ASCs would not be required to submit OAS CAHPS Survey results until CY 2018. This gives ASCs an additional year to become familiar with both the OAS CAHPS Survey and its administration requirements, as well as contract with a third-party vendor to administer the survey. We refer ASCs to the list of CMS-approved survey vendors available on the OAS CAHPS Web site (*https://oascahps.org/General-Information/Approved-Survey-Vendors*) and encourage ASCs to compare prices across vendors, as they may vary. We believe this additional year is sufficient time for ASCs to become familiar with the measures and survey administration before it is a requirement of the ASCQR Program and is publicly reported. Furthermore, we encourage ASCs to participate in the voluntary national implementation of the OAS CAHPS Survey to gain experience. More information can be found at: *https://oascahps.org*.

Moreover, as stated in the proposed rule (81 FR 45734), we will propose a format and timing for public reporting of OAS CAHPS Survey data in future rulemaking prior to implementation of the measures. Because CY 2016 is the first year of voluntary national implementation for the OAS CAHPS Survey, and we believe using data from this voluntary national implementation will help inform the displays for public reporting of OAS CAHPS Survey data for the ASCQR Program, we did not propose a format or timing for public reporting of OAS CAHPS Survey data in the proposed rule.

Comment: One commenter recommended that CMS instead provide ASCs with a sample survey document to use in their practices, which ASCs could enter into a CMS database for review. The commenter believed such an alternative would provide CMS with patient experience of care data without imposing undue burdens on ASCs, and give ASCs greater control over the data submission process.

Response: At present, there is no standardized survey available to collect information on the patient's overall experience for surgeries or procedures performed within an ASC. Implementing the OAS CAHPS Survey in the ASCQR Program will enable patients to compare patient experience of care data across multiple ASCs as part of their healthcare decision-making. In addition, we believe implementing the OAS CAHPS Survey in the ASCQR Program will incentivize ASCs to factor patient experience of care into their quality improvement efforts more proactively. Implementing a shorter ''sample survey'' would not enable the same apples-to-apples comparison as a fully tested survey, and we believe allowing ASCs to administer the survey by any means chosen rather than according to the OAS CAHPS Protocol and Guidelines Manual[207] could affect the reliability of a facility's scores. As currently specified, the OAS CAHPS Survey requires that the survey be administered by an approved survey vendor. This is to ensure that patients respond to the survey in a way that reflects their actual experiences with ASC care, and is not influenced by the ASC. Removing vendors, neutral third parties, could raise issues of objectivity and bias.

Comment: One commenter did not support adoption of the proposed ASC–15a–e survey-based measures because the commenter believes the OAS CAHPS Survey assesses only patient satisfaction with their care, not the quality of care provided, and is therefore inappropriate for use in the ASCQR Program.

Response: We disagree with the commenter's assertion that the OAS CAHPS Survey does not assess the quality of care provided at a facility. Studies show a relationship between the clinical quality of care provided at a facility and patients' experience of care.[208] [209] The OAS CAHPS Survey is specifically designed to measure patient experience of care in the hospital outpatient and ambulatory surgical center settings, and we believe patient experience of care is an important indicator of the quality of care provided at a facility. As noted above, patients are the best source for certain information about the quality of care.

Comment: One commenter requested additional information regarding the definition of ''completed surveys'' for the OAS CAHPS Survey.

Response: We refer readers to Exhibit 9.1 ''Steps for Determining Whether a

[205] CMS National Quality Strategy 2016. Available at: *https://www.cms.gov/medicare/quality-initiatives-patient-assessment-instruments/qualityinitiativesgeninfo/downloads/cms-quality-strategy.pdf*.

[206] Outpatient and Ambulatory Surgery CAHPS Survey: ''Protocol and Guidelines Manual.'' Available for download at: *https://oascahps.org/Survey-Materials*.

[207] Outpatient and Ambulatory Surgery CAHPS Survey: ''Protocol and Guidelines Manual.'' Available for download at: *https://oascahps.org/Survey-Materials*.

[208] Isaac, T., Zaslavsky, A.M., Cleary, P.D., and Landon, B.E. The Relationship Between Patients' Perception of Care and Measures of Hospital Quality and Safety. *Health Services Research*. 2010;45:1024–1040.

[209] Anhang, P. *et al*. Examining the Role of Patient Experience Surveys in Measuring Health Care Quality. *Med Care Res Rev*. 2014;71(5):552–554.

Questionnaire Meets Completeness Criteria'' on in the Protocol and Guidelines manual, available at: *https://oascahps.org/Survey-Materials.*

Exhibit 9.1
Steps for Determining Whether a Questionnaire Meets Completeness Criteria

Sum the number of questions that have been answered by the respondent that are applicable to all patients. These include questions 1–10 and 13–24.

R = total number of questions answered

Divide the total number of questions answered by 22, which is the total number of questions applicable to all patients, and then multiple by 100 to determine the percentage.

Percentage Complete = (R / 22) x 100

If the Percentage Complete is greater than or equal to 50 percent, then assign the applicable survey completed disposition code (code 110 or 120) to indicate that the case meets the definition of a completed survey. Otherwise, assign the disposition code for breakoff (code 310) to the case.

A survey administered under the OAS CAHPS Survey Protocols and Guidelines is considered to be ''complete'' if the patient answered at least half of the questions applicable to all patients.[210] There are a total of 22 questions that are applicable to all patients—Questions 1 through 10 and Questions 13 through 24. A survey is considered complete when at least 11 of these questions are answered by the patient.

Comment: One commenter expressed concerns about using the survey results in payment determinations, particularly in instances where a facility has a low response rate. A few commenters stated that patient response is out of the control of the facility, and asserted that facilities should not be penalized for patients' decision not to complete the survey.

Response: We agree with commenters that patient response is largely out of the control of the facility. However, we clarify we did not propose to penalize ASCs for patients' decision not to complete the survey. Payment implications under the ASCQR Program are tied to the successful and timely reporting of required quality measure data. An ASC will not receive a payment reduction based on performance under the ASC–15a–e measures if the ASC administers the survey according to the OAS CAHPS Survey Protocol and Guidelines Manual[211] and submits that data to CMS by the data submission deadline, regardless of the number of completed surveys the facility receives. Results will be used for public reporting only.

Comment: One commenter noted that the patient population for ASCs is different than that of hospitals, and there is little data available about this population's willingness to complete CAHPS surveys.

Response: We acknowledge the commenter's concern regarding the current lack of data on ASC patient response rates to patient experience of care surveys. As noted previously (81 FR 45730), before development of the OAS CAHPS Survey, there was no standardized survey available to collect information on the patient's overall experience for surgeries or procedures performed within an ASC. However, the field and mode testing of the OAS CAHPS Survey, as discussed in the above responses, indicates that ASCs will receive a reasonable response rate. For the mode experiment in 2015, which included 13,576 patients from 70 facilities (38 hospital outpatient departments and 32 ASCs), the overall response rate across all modes tested was 39 percent. The response rate for ASCs was slightly higher (39.6 percent) than the response rates for the hospital outpatient departments (38.6 percent) for the mode experiment. The response rate for the mail-only mode was 37 percent; the telephone-only response rate was 34 percent; and the mixed-mode response rate was 50 percent. For the field test in 2014, which was mixed-mode only and included 4, 179 patients from 36 facilities (18 hospital outpatient departments and 18 ASCs), the response rate was 46 percent. The overall response rate for the 18 participating ASCs was slightly higher (47 percent) than the response rate for the hospital outpatient departments.[212] Therefore, we believe ASCs will receive a reasonable response rate under the OAS CAHPS Survey.

Comment: One commenter expressed concern that the survey administration period for the OAS CAHPS Survey extends too far beyond the time after a patient's procedure.

Response: Both the field test (2014) and the mode experiment (2015) were conducted using monthly survey administration. The monthly sampling ensures that patient records are evenly distributed throughout the year without possible seasonal bias. As stated in the proposed rule (81 FR 45738), to meet the OAS CAHPS Survey requirements for the ASCQR Program, we proposed that ASCs contract with a CMS approved vendor to collect survey data for eligible patients at the ASCs on a monthly basis and report that data to CMS on the ASC's behalf by the

[210] Outpatient and Ambulatory Surgery CAHPS Survey: ''Protocol and Guidelines Manual.'' Available for download at: *https://oascahps.org/Survey-Materials.*

[211] Outpatient and Ambulatory Surgery CAHPS Survey: ''Protocol and Guidelines Manual.'' Available for download at: *https://oascahps.org/Survey-Materials.*

[212] *https://oascahps.org/General-Information/Mode-Experiment.*

quarterly deadlines established for each data collection period. While we require that the OAS CAHPS Survey be collected on a monthly basis, we are clarifying here that facilities can sample and implement the survey more frequently than monthly as long as the reporting of data is provided based on a monthly sampling plan. Information on sampling more frequently than monthly can be found in the OAS CAHPS Protocols and Guidelines Manual which is available at: *https://oascahps.org/Survey-Materials*. Under the OAS CAHPS Protocols and Guidelines Manual,[213] ASCs may choose to have their vendors select the sample and implement the survey more frequently as long as the monthly targets are met and the patient sample is distributed throughout the month. Therefore, if ASCs are concerned with the timeframe, they may survey more frequently.

Comment: One commenter recommended that CMS align the OAS CAHPS Survey with the HCAHPS Survey by: (1) Adopting the same four-point scale used in the HCAHPS Survey for ratings questions (that is, ''Always; Usually; Sometimes; or Never'' responses); and (2) adopting the same new medication questions used in the HCAHPS Survey to the OAS CAHPS Survey (Question 15: ''During this hospital stay, were you given any medicine that you had not taken before?''; Question 16: ''Before giving you any new medicine, how often did hospital staff tell you what the medicine was for?''; Question 17: ''Before giving you any new medicine, how often did hospital staff describe possible side effects in a way you could understand?'').

Response: As part of the survey development process, the OAS CAHPS Survey was aligned as appropriate with other CAHPS Surveys, including the HCAHPS Survey. However, the OAS CAHPS Survey assesses patient experience of care for outpatient surgical procedures, and therefore, takes the outpatient/ambulatory setting into account and captures information about the appropriate experiences of care for this particular setting.

We note that the four-point scale response set used for some HCAHPS Survey questions, ''Always; Usually; Sometimes; or Never,'' is appropriate to use when a question includes the phrase ''how often.'' This is appropriate in the inpatient setting, where patients stay in the hospital for a longer period of time. The OAS CAHPS Survey questions use a single point in time reference for an outpatient surgery or procedure because patients spend a significantly shorter period of time in the facility. Therefore, we believe the OAS CAHPS Survey questions and response options are worded appropriately (that is, for the majority of the OAS CAHPS Survey questions, the response categories are: ''Yes, definitely,'' ''Yes, somewhat,'' or ''No.'' Response categories for other questions are: ''Yes'' or ''No'' for this setting of care and treatment situation.

While there are no plans to add questions about new medications to the OAS CAHPS Survey at this time, we will take this recommendation into consideration during future updates to the survey.

Comment: One commenter expressed concern that the OAS CAHPS Survey groups patients' assessment of care provided by doctors and nurses together because the commenter believes this will provide less meaningful information to providers and patients. The commenter recommended that CMS develop separate questions regarding nurses' care, focusing on the nursing staff's effect on the patient's surgical experience and discharge instructions to better measure the role of nurses in patient experience of care.

Response: In the OAS CAHPS Survey, references to the doctors, nurses, and other staff at the facility are grouped together for two reasons. First, grouping assessment of the healthcare personnel at a facility helps reduce the overall length of the survey so that similar questions are not repeated separately for doctors and nurses. Second, the questions listed under sections I, II, III, and IV (Before Your Procedure; Facility and Staff; Communications; and Recovery) include aspects of the patient's care that could be addressed by either the doctor or another healthcare professional at the facility. Combining these professionals under a single series of questions allows the patient to report that someone provided information and explained the process without having to recall the specific individual who gave the information. This is important because the OAS CAHPS Survey is intended to assess the patient's experience of care at the facility, including, but not separating out, all the staff that work at the facility. For these reasons, we believe it is appropriate to ask these questions in a way that reflects the care provided by doctors, nurses, and other facility staff combined. We note that during the OAS CAHPS Survey field test conducted in 2014 and the mode experiment conducted in 2015, we did not receive any indications that the respondents had any difficulty answering these questions as they are currently written. The nonresponse, which is an indication of difficulty answering a question, was very low for the two questions that combine doctors and nurses (Question 7, which is about treating the patient with courtesy and respect and Question 8, which is about making sure the patient was a comfortable as possible). For the field test, less than 0.5 percent of the respondents did not respond to these questions while 99.5 percent were able to answer these questions. For the mode experiment just over 1 percent of the respondents did not respond to the questions while nearly 99 percent were able to answer them. These nonresponse rates were very similar to the questions that were about clerks and receptionists.

Comment: One commenter expressed concern that CMS did not propose to include the Consumer Assessment of Healthcare Providers and Systems Surgical Care Survey (S–CAHPS) in the ASCQR Program alongside the OAS CAHPS Survey. The commenter stated the S–CAHPS Survey, developed by AHRQ in collaboration with a broad array of surgical groups, addresses critical gaps in the assessment of surgical care such as informed consent, shared decision-making, anesthesia care, post-operative instructions, and access, all of which are issues consumers find to be very important in seeking surgical care. The commenter therefore recommended CMS include the S–CAHPS Survey in the ASCQR Program in addition to the OAS CAHPS Survey. Another commenter recommended CMS adopt the S–CAHPS Survey for the ASCQR Program instead of the OAS CAHPS Survey because the S–CAHPS Survey is NQF-endorsed for the measurement of patient experience of care before, during, and after surgery.

Response: The focus of S–CAHPS is to obtain a patient's experience of care received from a surgeon,[214] whereas the focus of OAS CAHPS is to obtain data on a patient's experience of care received from a facility, specifically from an ambulatory surgery center or an ASC. Therefore, the units of analyses are not the same. We also refer readers to our discussions above regarding non-NQF endorsed measures. Furthermore, in order for a measure to be proposed for adoption into the ASCQR Program, it must first be put on the MUC list and reviewed by the MAP. The S–CAHPS

[213] Outpatient and Ambulatory Surgery CAHPS Survey: ''Protocol and Guidelines Manual.'' Available for download at: *https://oascahps.org/Survey-Materials*.

[214] American College of Surgeons. ''S–CAHPS (Consumer Assessment of Healthcare Providers and Systems Surgical Care Survey).'' Available at: *https://www.facs.org/advocacy/quality/cahps*.

Survey has not been submitted to the MAP for consideration as a measure for the ASCQR Program, and therefore, cannot be proposed or adopted for the program at this time. However, we will take these recommendations into consideration for the future.

Comment: Two commenters requested that CMS reconsider its position on respondent confidentiality for the OAS CAHPS Survey administration to align with the HCAHPS survey, which allows for the release of patient-level data for quality improvement purposes, with the stipulation that a patient's identity should not be shared with direct care staff. One commenter stated that very few patients return to an ASC for another surgical procedure within three months of the index surgery, and that ASC patients should therefore not be considered to have an ''ongoing relationship'' with the ASC where they received care. Another commenter noted that maintaining this confidentiality would pose challenges to identification and formal investigation of potential grievances and limit facilities' ability to map specific ratings to other patient-level encounter variables for quality improvement initiatives. Commenter asserted that ASCs must be able to work confidentially with the OAS CAHPS Survey results in order to study the patient experience and drive quality improvement efforts.

Response: The administration protocols for OAS CAHPS follow protocols for other more recent CAHPS® Surveys, restricting the release of patient-level data if the patient has not consented. For example, the Home Health Care CAHPS (HHCAHPS) Survey protocol states: ''HHCAHPS Survey approved vendors can provide responses linked to a sample patient's name and other identifying information only if the sample patient gives his or her consent on the 'Consent to Share Identifying Information' question.'' [215] For the Hospital IQR Program, because hospitals can self-administer the HCAHPS Survey, we do not state that patients' responses and identifying information will not be shared with the hospital. However, HCAHPS Surveys administered via a third-party vendor are not linked to a sample patient's name unless the patient gives his or her consent, and we encourage hospitals to undertake measures to protect patient confidentiality when self-administering the survey. We note that facilities may choose to add the ''Consent to Share'' question [216] to the OAS CAHPS Survey. This question asks whether a patient gives permission for their name to be linked to their survey responses. However, we note that each facility should consult with its own counsel to ensure compliance with applicable privacy and security laws.

Comment: Two commenters expressed concern that if the OAS CAHPS Survey results are reported at the CCN level, the results will be more difficult for patients to use in selecting a facility for their care, and of less value to individual facilities for performance improvement purposes. The commenters recommended that CMS collect and report ASC–15a-e measure data at the NPI level, as is done for other ASCQR Program measures.

Response: Survey results are collected and reported at the CCN level because the OAS CAHPS Survey was tested at the CCN level. However, we thank the commenters for their recommendation to report OAS CAHPS Survey-based measure data at the NPI level for patient ease and individual facility performance improvement purposes. We will consider the feasibility of requiring ASCs to collect and report OAS CAHPS Survey data at the NPI level in future rulemaking.

Comment: Many commenters expressed concerns regarding the length of the OAS CAHPS Survey. A number of commenters asserted that the OAS CAHPS Survey's length impairs ASCs' ability to add their own questions to the survey because the resulting survey would be too long to receive a reasonable response rate. The commenters also expressed concern that the OAS CAHPS Survey's length will limit the number of completed surveys an ASC receives because patients will be overwhelmed by the number of questions in the survey or otherwise unable to complete the survey, and in turn impact the ability of the ASC to use the survey data in quality improvement activities.

These commenters recommended CMS shorten the OAS CAHPS Survey in order to increase survey completion rates, and further recommended CMS allow each facility to have more choice in the questions they include in their survey. A number of commenters specifically recommended that CMS shorten the required patient experience items to allow ASCs to add their own questions and collect targeted information to enhance patient experience at their own facilities. Numerous commenters also recommended that CMS shorten the ''About You'' section of the OAS CAHPS Survey to include only those items either required by law or collected for use in patient-mix adjustment.

Response: The OAS CAHPS Survey is comparable in length and survey response rate to other patient experience of care surveys. For example, the HCAHPS Survey is 32 questions long,[217] and the response rate for the HCAHPS Survey has generally been 32 to 33 percent.[218] By comparison, the OAS CAHPS Survey is 37 questions long, and the survey's 2015 mode experiment showed an overall response rate of 39 percent.[219] The mode experiment was conducted to test the OAS CAHPS Survey questions when administered by mail-only, telephone-only, and mixed-mode (mail with telephone follow-up).

With regard to the concern that response rates would be negatively affected by any supplemental questions, we found that the response rates for the field test in 2014 were good for ASCs (47 percent for the mixed-mode) and that earlier version of the survey included 12 additional questions that have since been removed from the OAS CAHPS Survey.

While we appreciate commenters' recommendation that facilities be allowed to choose which questions to administer, the survey instrument was developed in order to provide a more complete picture of patients' experience of care in the ASC setting. We believe allowing facilities to administer a selection of the survey items to patients would impair the assessment of a facility's quality of care, and would also inhibit the comparison of performance across facilities and the reliability of a facility's scores. As currently specified, the OAS CAHPS Survey requires that the survey be administered by an approved survey vendor. As previously discussed, this is to ensure that patients respond to the survey in a way that reflects their actual experiences with ASC care, and is not influenced by the ASC. Removing vendors, neutral third parties, could raise issues of objectivity and bias. In addition, the 24 core questions of the OAS CAHPS Survey are either directly actionable (that is, give feedback to hospitals) or inform the need for patients to answer subsequent

[215] Home Health Care CAHPS Survey: ''Protocols and Guidelines Manual.'' Available at: *https://homehealthcahps.org/Portals/0/PandGManual.pdf.*

[216] Outpatient and Ambulatory Surgery CAHPS Survey: ''Survey Materials.'' Available at: *https://oascahps.org/Survey-Materials.*

[217] *http://www.hcahpsonline.org/survey instrument.aspx.*

[218] For example, see: *https://www.medicare.gov/hospitalcompare/details.html?msrCd=prnt1grp1&ID=220066&stCd=MA&stName=Massachusetts.*

[219] Outpatient and Ambulatory Surgery CAHPS Survey: ''Mode Experiment.'' Available at: *https://oascahps.org/General-Information/Mode-Experiment.*

questions that are actionable. For example, Question 10, which asks whether a patient received anesthesia, establishes whether a patient should respond to Questions 11 and 12, which provide actionable feedback to ASCs regarding their communication with the patient about the anesthesia process and possible side effects. We also encourage ASCs to consider adding specific questions of interest to the OAS CAHPS Survey. As noted in the CY 2017 OPPS/ASC proposed rule (81 FR 45732), ASCs may elect to add up to 15 supplemental questions to the OAS CAHPS Survey. These could be questions ASCs develop specifically for use alongside the OAS CAHPS Survey, or questions from an existing survey.

However, we also acknowledge commenters' concerns about the length of the OAS CAHPS Survey and their recommendations to shorten sections of the survey, such as the ''About You'' section. We continue to evaluate the utility of individual questions as we collect new data from the survey's voluntary national implementation, and will consider different options for shortening the OAS CAHPS Survey without the loss of important data in the future. Specifically, we are contemplating removing two demographic questions—the ''gender'' and ''age'' questions—from the OAS CAHPS Survey in its next update, if we determine that it is feasible, when collecting information on survey-eligible patients from facility records, that gender and age information could also be collected via these records.

Comment: One commenter requested that CMS remove or revise two questions on the OAS CAHPS Survey asking whether a doctor or anyone from the facility: (1) Gave the patient all the information needed about their procedure; and/or (2) gave the patient easy to understand instructions about preparing for their procedure. The commenter asserted that patient education is solely within the purview of the doctor's office, not the facility, and should therefore be removed from a survey assessing patients' experience of care at the facility.

Response: We disagree with the commenter's assertion that patient education is solely within the purview of the doctor's office. We believe it is the facility's responsibility to ensure that a doctor, nurse, or other facility staff member provides the patient with information about preparing for their procedure, the procedure itself, and what to expect following discharge from the ASC. The OAS CAHPS Survey-based measures were reviewed by two 10-member TEPs comprised of experts on outpatient surgery, including clinicians, providers, patient advocates, and representatives from other stakeholder organizations. These TEPs provided guidance in the establishment of relevant topics for assessing patient experience of care at an outpatient facility, and commented on draft versions of the survey for cognitive and field testing. These TEPs agreed with the questions as drafted, including those regarding the facility's communication with patients. Therefore, we believe it is appropriate to include these important communications between the patient and the facility about their care in the OAS CAHPS Survey.

The OAS CAHPS Survey is focused on patients' experience of care received for their ambulatory surgery or procedure. A physician/surgeon who performs surgeries/procedures at a facility is a member of that facility with both rights and responsibilities. We believe it is the facility's responsibility to ensure that someone—whether the doctor, nurse, or other facility staff member—provide patients with information about preparing for their procedure, about the procedure itself, as well as what to expect following the procedure/surgery. Therefore, we believe it is appropriate to include these important communications with patients in the OAS CAHPS Survey.

Comment: One commenter requested clarification from CMS regarding the inclusion of pain management-related questions in the OAS CAHPS Survey. The commenter expressed concern that the pain management communication questions may negatively influence patient perceptions about their overall care and, in turn, result in negative responses throughout the survey. Another commenter expressed concern that the OAS CAHPS Survey's questions regarding communication about pain management may not reflect the true perception patients have of their experience relative to pain management, and recommended CMS continue to explore ways to ensure better measurement of patients' experience with pain management.

Response: The OAS CAHPS Survey pain management communication questions focus on the information provided to patients regarding pain management following discharge from an ASC, not the ASC's direct control or management of patients' pain. The ASC is responsible for providing the patient with this information if there is a possibility that the patient might have pain as a result of the procedure. Communication about possible effects during recovery is an important factor for patients. As discussed previously, the OAS CAHPS Survey underwent a rigorous survey development process, the results of which did not indicate any negative impact to overall survey responses resulting from the inclusion of these questions regarding pain management communication. In addition, we have no reason to believe that patients' responses to the pain management communication questions would not accurately reflect their experience with the facility. Therefore, we do not believe that the pain management communication question would negatively influence patient perceptions about their overall care, resulting in negative responses throughout the survey. However, as noted in the CY 2017 OPPS/ASC proposed rule (81 FR 45732), we will continue to evaluate the appropriateness and responsiveness of these questions to patient experience of care and public health concerns.

Comment: A number of commenters expressed concern regarding the OAS CAHPS Survey pain management communication question, ''Some ways to control pain include prescription medicine, over-the-counter pain relievers or ice packs. Did your doctor or anyone from the facility give you information about what to do if you had pain as a result of your procedure?'' One commenter recommended that CMS refine this question to be clear the survey is asking whether patients received pain management information that could be applied once they left the facility, and that the information could include, but is not limited to, information about pain management using appropriate medications. Another commenter recommended reorganizing the pain management methods listed in the first question to run from non-medication pain management to prescription pain medication treatment. One commenter recommended that CMS expand this question to include other methods of pain management, such as physical therapy, because the commenter believed using a more inclusive list of pain control methods would help to further combat the over prescription of opioids for pain management.

Some commenters also expressed concerns regarding the pain management communication control question, ''At any time after leaving the facility, did you have pain as a result of your procedure?'' Specifically, a few commenters requested that CMS revise the pain management communication control question to ask whether, at any time after leaving the facility, the patient experienced pain as a result of their procedure that they felt they could

not manage based on the information they received from the facility or treating physician.

Response: We thank the commenters for their recommendations. As discussed previously, the OAS CAHPS Survey underwent a rigorous survey development process, the results of which indicated that patients understand these questions as presented, and that the questions sufficiently developed for use in the survey.[220] As discussed previously, the OAS CAHPS Survey-based measures were reviewed by two 10-member TEPs comprised of experts on outpatient surgery, including clinicians, providers, patient advocates, and representatives from other stakeholder organizations. These TEPs provided guidance in the establishment of relevant topics for assessing patient experience of care at an ASC, and commented on draft versions of the survey for cognitive and field testing. The possible treatments for pain included in the survey reflect what is tested and reflected to work, and their order is not intended to reflect a preference for any single pain treatment method, only to provide examples of types of pain management a facility may discuss with a patient prior to discharge. The examples provided in this question are also not intended to be an exhaustive list, and we acknowledge that there are many methods for addressing pain following a procedure performed at an ASC, including physical therapy. Because this is not an exhaustive list, we do not believe it is necessary to exclude, expand, or reorganize these questions at this time. However, we will take these suggestions, including reorganizing the pain management methods, into consideration for future iterations of the survey.

Comment: Two commenters expressed concerns that the pain management communication control question raises an unrealistic expectation regarding pain control, and may potentially encourage over prescription of opioids. These commenters therefore recommended removing the pain management communication control question from the OAS CAHPS Survey.

Response: We also note that Question 16 ''At any time after leaving the facility, did you have pain as a result of your procedure?'' is a control question; in other words, an answer of ''yes'' or of ''no'' would not affect provider scores on the OAS CAHPS survey questions. The scores are based on the previous Question 15, which asked if the doctor or anyone from the facility gave the patient information about what to do if the patient had pain as a result of the procedure. We will not publicly report the data from the control question that asks if the patient had pain as a result of the procedure, rather, that question is only used to determine if the previous question should be included in the score or not. For example, if the patient reported having had pain in Question 16, then the response to Question 15 would be included in the score that is reported for the ASC.

For example, the focus of Questions 15 and 16 is to determine whether a patient who is expected to experience pain as a result of a procedure was given information from the doctor or anyone from the facility about what to do about pain. If a patient experiences pain as a result of a procedure (Question 16), it is important that the patient was provided information as to what to do about the pain (Question 15). In these instances, the response to Question 15 would be included in the score. However, for some procedures conducted in an ASC (for example colonoscopies), there is little expectation of the patient experiencing pain. In these instances, a doctor or anyone from the facility may not have given a patient information about what to do about pain as such information would not be relevant. In these latter instances, the response to Question 15 would not be included in the score unless the patient response is a top-box (that is, ''Yes, definitely'') response.

We do not believe a question asking whether patients experienced pain would have an undue influence on patients' responses to the OAS CAHPS Survey or warrant its removal from the OAS CAHPS Survey. As stated above, the OAS CAHPS Survey underwent a rigorous survey development process, the results of which did not indicate any negative impact to overall survey responses resulting from the inclusion of these questions regarding pain management communication. In addition, we have no reason to believe that patients' responses to the pain management communication questions would not accurately reflect their experience with the facility. Therefore, we do not believe that the pain management communication question would negatively influence patient perceptions about their overall care, resulting in negative responses throughout the survey.

Furthermore, as stated in the proposed rule (81 FR 45732), this control question will not affect scores on the OAS CAHPS survey. Rather, scores are based on the previous Question 15, which asks if the doctor or anyone from the facility gave the patient information about what to do if the patient had pain as a result of the procedure. However, we will review the data from the voluntary national implementation and continue to evaluate the appropriateness and responsiveness of these questions, particularly for any unintended consequences.

Comment: One commenter requested clarification about whether CMS intends to publicly report ASC scores on the pain management communication control question.

Response: We interpret the comment to refer to Question 16, ''At any time after leaving the facility, did you have pain as a result of your procedure?'' As stated above, this question is a control question, meaning that an answer of ''yes'' or ''no'' would not affect scores on the OAS CAHPS survey questions. Rather, scores are based on the previous Question 15, which asks if the doctor or anyone from the facility gave the patient information about what to do if the patient had pain as a result of the procedure.

Comment: One commenter recommended that CMS remove the questions on the OAS CAHPS Survey asking patients whether they experienced pain, nausea, or bleeding following a procedure, because the commenter believes this information is not useful to facilities in quality improvement activities, as these are all risks associated with surgery.

Response: Question 17 (''Before you left the facility, did your doctor or anyone from the facility give you information about what to do if you had nausea or vomiting?'') and Question 18 (''At any time after leaving the facility, did you have nausea or vomiting as a result of either your procedure or the anesthesia?'') are intended to assess the information provided to patients regarding what to expect following a surgery/procedure. We believe it is the facility's responsibility to ensure that the patient is aware of the potential side effect of their treatment, and, therefore, believe these questions are indicative of quality of care. As above, we note that Question 18 is a control question, so an affirmative or negative response would not be included in the provider scores on the OAS CAHPS Survey, but rather is used to determine if the provider should have given guidance on how to handle nausea or vomiting (Question

[220] A description of the field test analysis of the survey questions was documented in the **Federal Register** notice on January 16, 2015 (80 FR 2430 through 2431). Available at: *https://www.cms.gov/Regulations-and-Guidance/Legislation/PaperworkReductionActof1995/PRA-Listing-Items/CMS-10500.html.*

17). The information will be useful to facilities because they will be able to ensure that the information that patients need during recovery is adequately addressed by the facility staff. These questions are not reporting whether the patients experienced pain, nausea, vomiting, bleeding or signs of infection; the questions are reporting if the patients were informed what to do if they had these outcomes.

For example, the focus of questions 17 and 18 is to determine whether a patient who might likely experience nausea or vomiting as a result of a procedure was given information from the doctor or anyone from the facility about what to do to manage these outcomes. If a patient experiences these outcomes as a result of a procedure, it is important that the patient was provided information on how to manage these outcomes. In these instances, the response to Question 17 would be included in the score. However, for some procedures conducted in an ASC (for example laser surgeries), there is little expectation of the patient experiencing nausea or vomiting and in these instances a doctor or anyone from the facility may not have given a patient information on how to manage these outcomes as such information would not be relevant. In these latter instances the responses to Question 17 would not be included in the score unless the patient response is a top-box (that is, ''Yes, definitely'') response.

Furthermore, as stated in the proposed rule (81 FR 45732), this control question will not affect scores on the OAS CAHPS survey. Rather, scores are based on the previous Question 17, which asks if the doctor or anyone from the facility gave information about what to do if the patient had nausea or vomiting. However, we will review the data from the voluntary national implementation and continue to evaluate the appropriateness and responsiveness of these questions, particularly for any unintended consequences.

Comment: One commenter recommended that CMS include an item in the OAS CAHPS Survey assessing whether patients felt they were provided sufficient and timely access to medical innovation and technology during their care in the ASC setting.

Response: We thank the commenter for its recommendation as well as similar concerns from other commenters and will take this recommendation into consideration while balancing the survey's length during the next OAS CAHPS Survey update.

After consideration of the public comments we received, we are finalizing our proposal to adopt the ASC–15a–e: Outpatient and Ambulatory Surgery Consumer Assessment of Healthcare Providers and Systems (OAS CAHPS) Survey-based measures for the ASCQR Program for the CY 2020 payment determination and subsequent years as proposed with a clarification that ASCs that anticipate receiving more than 300 surveys are required to either: (1) randomly sample their eligible patient population, or (2) survey their entire OAS CAHPS eligible patient population. We note that these measures are also being finalized in the Hospital OQR Program and refer readers to section XIII.B.5.c. of this final rule with comment period for more details.

Including the proposals we are finalizing, the measure set for the ASCQR Program CY 2020 payment determination and subsequent years is listed below.

ASCQR Program Measure Set Previously Finalized and Newly Finalized for the CY 2020 Payment Determination and Subsequent Years

ASC #	NQF #	Measure name
ASC–1	0263	Patient Burn.
ASC–2	0266	Patient Fall.
ASC–3	0267	Wrong Site, Wrong Side, Wrong Patient, Wrong Procedure, Wrong Implant.
ASC–4	† 0265	All-Cause Hospital Transfer/Admission.
ASC–5	† 0264	Prophylactic Intravenous (IV) Antibiotic Timing.
ASC–6	N/A	Safe Surgery Checklist Use.
ASC–7	N/A	ASC Facility Volume Data on Selected ASC Surgical Procedures.*
ASC–8	0431	Influenza Vaccination Coverage among Healthcare Personnel.
ASC–9	0658	Endoscopy/Polyp Surveillance: Appropriate Follow-Up Interval for Normal Colonoscopy in Average Risk Patients.
ASC–10	0659	Endoscopy/Polyp Surveillance: Colonoscopy Interval for Patients with a History of Adenomatous Polyps-Avoidance of Inappropriate Use.
ASC–11	1536	Cataracts: Improvement in Patient's Visual Function within 90 Days Following Cataract Surgery.**
ASC–12	2539	Facility 7-Day Risk-Standardized Hospital Visit Rate after Outpatient Colonoscopy.
ASC–13	N/A	Normothermia Outcome.***
ASC–14	N/A	Unplanned Anterior Vitrectomy.***
ASC–15a	N/A	OAS CAHPS—About Facilities and Staff.***
ASC–15b	N/A	OAS CAHPS—Communication About Procedure.***
ASC–15c	N/A	OAS CAHPS—Preparation for Discharge and Recovery.***
ASC–15d	N/A	OAS CAHPS—Overall Rating of Facility.***
ASC–15e	N/A	OAS CAHPS—Recommendation of Facility.***

† We note that NQF endorsement for this measure was removed.

* Procedure categories and corresponding HCPCS codes are located at: *http://qualitynet.org/docs/ContentServer?c=Page&pagename=QnetPublic%2FPage%2QnetTier2&cid=1228772475754.*

** Measure voluntarily collected effective beginning with the CY 2017 payment determination as set forth in section XIV.E.3.c. of the CY 2015 OPPS/ASC final rule with comment period (79 FR 66984 through 66985).

***New measure finalized for the CY 2020 payment determination and subsequent years.

5. ASCQR Program Measure for Future Consideration

In the CY 2013 OPPS/ASC final rule with comment period, we set forth our considerations in the selection of ASCQR Program quality measures (77 FR 68493 through 68494). We seek to develop a comprehensive set of quality measures to be available for widespread use for making informed decisions and quality improvement in the ASC setting (77 FR 68496). We also seek to align these quality measures with the National Quality Strategy (NQS), the CMS Strategic Plan (which includes the

CMS Quality Strategy), and our other quality reporting and value-based purchasing (VBP) programs, as appropriate. Accordingly, as we stated in the CY 2015 OPPS/ASC final rule with comment period (79 FR 66979), in considering future ASCQR Program measures, we are focusing on the following NQS and CMS Quality Strategy measure domains: Make care safer by reducing harm caused in the delivery of care; strengthen person and family engagement as partners in their care; promote effective communication and coordination of care; promote effective prevention and treatment of chronic disease; work with communities to promote best practices of healthy living; and make care affordable.

In the CY 2017 OPPS/ASC proposed rule (81 FR 45735), we invited public comments on one measure developed by the ASC Quality Collaboration for potential inclusion in the ASCQR Program in future rulemaking: the Toxic Anterior Segment Syndrome (TASS) measure.

TASS, an acute, noninfectious inflammation of the anterior segment of the eye, is a complication of anterior segment eye surgery that typically develops within 24 hours after surgery.[221] The TASS measure assesses the number of ophthalmic anterior segment surgery patients diagnosed with TASS within 2 days of surgery. Although most cases of TASS can be treated, the inflammatory response associated with TASS can cause serious damage to intraocular tissues, resulting in vision loss.[222] Prevention requires careful attention to solutions, medications, and ophthalmic devices and to cleaning and sterilization of surgical equipment because of the numerous potential etiologies.[223] Despite a recent focus on prevention, cases of TASS continue to occur, sometimes in clusters.[224] With millions of anterior segment surgeries being performed in the United States each year, measurement and public reporting have the potential to serve as an additional tool to drive further preventive efforts.

This issue is of interest to the ASCQR Program because cataract surgery is an anterior segment surgery commonly performed at ASCs. In addition, the TASS measure addresses the MAP-identified priority measure area of procedure complications for the ASCQR Program.

The TASS measure was included on the 2015 MUC list[225] and reviewed by the MAP. The MAP conditionally supported the measure (MUC ID: 15–1047), noting the high value and urgency of this measure, given many new entrants to the ambulatory surgical center space, as well as the clustering outbreaks of TASS. The MAP cautioned that the measure should be reviewed and endorsed by NQF before adoption into the ASCQR Program, so that a specialized standing committee can evaluate the measure for scientific acceptability.[226] A summary of the MAP recommendations can be found at: *http://www.qualityforum.org/Projects/i-m/MAP/2016_Final_Recommendations.aspx*.

The TASS measure is used to assess the number of ophthalmic anterior segment surgery patients diagnosed with TASS within 2 days of surgery. The numerator for this measure is all anterior segment surgery patients diagnosed with TASS within 2 days of surgery. The denominator for this measure is all anterior segment surgery patients. The specifications for this measure for the ASC setting can be found at: *http://www.ascquality.org/qualitymeasures.cfm*, under ''Implementation Guide.''

We invited public comments on the possible inclusion of this measure in the ASCQR Program measure set in the future.

Comment: A number of commenters agreed that TASS is a serious complication of anterior segment eye surgery, and that the high volume of eye procedures performed in the United States each year highlights the importance of measures that can support best practices in instrument sterilization and reprocessing. The commenters also noted that incidences of TASS are attributable to the ASC, prevention is actionable by the facility, and published guidelines regarding cleaning and sterilizing of surgical instruments to help improve quality and prevent TASS are available. The commenters also stated that measuring the incidence of TASS may aid in better tracking and understanding the prevalence of TASS.

Response: We thank the commenters for their comments and insights regarding future inclusion of the TASS measure in the ASCQR Program. We will take these comments into consideration if we propose to adopt the TASS measure for the ASCQR Program in the future.

Comment: A few commenters did not support future adoption of the TASS measure because the occurrence of TASS is not necessarily attributable to the ASC, and as a result ASCs may lack the ability to reduce cases of TASS. Some commenters recommended that CMS wait until the NQF has reviewed and endorsed the TASS measure before adopting this measure for the ASCQR Program.

Response: We thank the commenters for sharing their concerns regarding future inclusion of the TASS measure in the ASCQR Program. As stated above, we believe that ASCs could reduce cases of TASS by prevention, which requires careful attention to solutions, medications, and ophthalmic devices and to cleaning and sterilization of surgical equipment because of the numerous potential etiologies.[227] With millions of anterior segment surgeries being performed in the United States each year, we believe that measurement and public reporting have the potential to serve as an additional tool to drive further preventive efforts. However, we will take these comments into consideration if we propose to adopt the TASS measure for the ASCQR Program in the future.

6. Maintenance of Technical Specifications for Quality Measures

We refer readers to the CY 2012 OPPS/ASC final rule with comment period (76 FR 74513 through 74514), where we finalized our proposal to follow the same process for updating the ASCQR Program measures that we adopted for the Hospital OQR Program measures, including the subregulatory process for making updates to the adopted measures. In the CY 2013 OPPS/ASC final rule with comment period (77 FR 68496 through 68497), the CY 2014 OPPS/ASC final rule with comment period (78 FR 75131), and the

[221] Centers for Disease Control and Prevention. Toxic Anterior Segment Syndrome after Cataract Surgery—Maine, 2006. MMWR Morb Mortal Wkly Rep. 2007 Jun 29;56(25):629–630.

[222] Breebaart AC, Nuyts RM, Pels E, Edelhauser HF, Verbraak FD. Toxic Endothelial Cell Destruction of the Cornea after Routine Extracapsular Cataract Surgery. Arch Ophthalmol 1990; 108:1121–1125.

[223] Hellinger WC, Bacalis LP, Erdhauser HF, Mamalis N, Milstein B, Masket S. ASCRS Ad Hoc Task Force on Cleaning and Sterilization of Intraocular Instruments: Recommended Practices for Cleaning and Sterilizing Intraocular Surgical Instruments. J Cataract Refract Surg. 2007 Jun;33(6):1095–1100.

[224] Moyle W, Yee RD, Burns JK, Biggins T. Two Consecutive Clusters of Toxic Anterior Segment Syndrome. Optom Vis Sci. 2013 Jan;90(1):e11–23.

[225] Available at: *http://www.qualityforum.org/2015_Measures_Under_Consideration.aspx*, under ''2015 Measures Under Consideration List (PDF).''

[226] Available at: *https://www.qualityforum.org/WorkArea/linkit.aspx?LinkIdentifier=id&ItemID=81593*.

[227] Hellinger WC, Bacalis LP, Erdhauser HF, Mamalis N, Milstein B, Masket S. ASCRS Ad Hoc Task Force on Cleaning and Sterilization of Intraocular Instruments: Recommended Practices for Cleaning and Sterilizing Intraocular Surgical Instruments. J Cataract Refract Surg. 2007 Jun;33(6):1095–1100.

CY 2015 OPPS/ASC final rule with comment period (79 FR 66981), we provided additional clarification regarding the ASCQR Program policy in the context of the previously finalized Hospital OQR Program policy, including the processes for addressing nonsubstantive and substantive changes to adopted measures. In the CY 2016 OPPS/ASC final rule with comment period (80 FR 70531), we provided clarification regarding our decision to not display the technical specifications for the ASCQR Program on the CMS Web site, but stated that we will continue to display the technical specifications for the ASCQR Program on the QualityNet Web site. In addition, our policies regarding the maintenance of technical specifications for the ASCQR Program are codified at 42 CFR 416.325. In the CY 2017 OPPS/ASC proposed rule (81 FR 45735), we did not propose any changes to our policies regarding the maintenance of technical specifications for the ASCQR Program.

7. Public Reporting of ASCQR Program Data

In the CY 2012 OPPS/ASC final rule with comment period (76 FR 74514 through 74515), we finalized a policy to make data that an ASC submitted for the ASCQR Program publicly available on a CMS Web site after providing an ASC an opportunity to review the data to be made public. In the CY 2016 OPPS/ASC final rule with comment period (80 FR 70531 through 70533), we finalized our policy to publicly display data by the National Provider Identifier (NPI) when the data are submitted by the NPI and to publicly display data by the CCN when the data are submitted by the CCN. In addition, we codified our policies regarding the public reporting of ASCQR Program data at 42 CFR 416.315 (80 FR 70533). In this final rule with comment period, we are formalizing our current public display practices regarding timing of public display and the preview period, as discussed in more detail below and finalizing how we will announce the preview period timeframes.

Our regulations at 42 CFR 416.315 state that data that an ASC submits for the ASCQR Program will be made publicly available on a CMS Web site. We currently make the data available on at least a yearly basis and strive to publicly display data as soon as possible. Furthermore, as previously stated in the CY 2012 OPPS/ASC final rule with comment period (76 FR 74514 through 74515), we are required to give ASCs an opportunity to preview their data before it is made public. Historically, preview for the April *Hospital Compare* data release typically occurs in January, preview for the July *Hospital Compare* data release typically occurs in April, preview for the October *Hospital Compare* data release typically occurs in July, and the preview for the December *Hospital Compare* data release typically occurs in October. During the preview period, ASCs have generally had approximately 30 days to preview their data. In the CY 2017 OPPS/ASC proposed rule (81 FR 45735 through 45736), therefore, we proposed to publicly display data on the *Hospital Compare* Web site, or other CMS Web site, as soon as possible after measure data have been submitted to CMS, consistent with current practice. In addition, we proposed that ASCs will generally have approximately 30 days to preview their data, also consistent with current practice.

Lastly, moving forward, we proposed to announce the timeframes for each preview period starting with the CY 2018 payment determination on a CMS Web site and/or on our applicable listservs.

We invited public comments on our proposals regarding the timing of public display and the preview period as discussed above.

Comment: A number of commenters supported CMS' proposal to give ASCs 30 days to preview their quality data before it is publicly reported on Hospital Compare because commenters agree doing so will increase data transparency and better educate patients and providers regarding ASC's performance under the ASCQR Program. The commenters encouraged CMS to publicly display ASCQR Program data as soon as possible, because doing so will help consumers make more informed decisions about their care and encourage facilities to ensure high quality of care.

Response: We thank the commenters for their support.

Comment: One commenter urged CMS to align preview period policies across its inpatient and outpatient quality reporting programs in order to reduce confusion and frustration of providers participating in more than one quality reporting program.

Response: By adopting a 30-day preview period, the ASCQR Program will align the duration of its preview period for publicly reporting program data with the Hospital IQR Program (77 FR 53505), the Hospital Readmissions Reduction Program (76 FR 51672 through 51673), the Hospital-Acquired Condition Reduction Program (78 FR 50727 through 50728), the PPS-Exempt Cancer Hospital Quality Reporting Program (77 FR 53562 through 53563), and the Inpatient Psychiatric Facility Quality Reporting Program (77 FR 53654). We also note that we are finalizing a similar proposal under the Hospital OQR Program and refer readers to section XIII.C.8. of this final rule with comment period for more details.

Comment: One commenter urged CMS to finalize a preview period that is reliably and consistently 30 days in length because ASCs need predictability in the preview period in order to appropriately plan staffing and ensure the data are accessed quickly and distributed to the appropriate parties for review in a timely fashion. Another commenter recommended that CMS establish a set timeline for the release of preview reports and consistent preview periods, because doing so will ensure greater quality in data reporting and reduce unnecessary costs for facilities in reviewing program data.

Response: We agree with the commenters, and believe adopting a consistent preview period will benefit ASCs' planning and review of ASCQR Program measure data. We also understand commenters' concern that allowing variability in the duration of the preview period may impact ASCs' ability to plan and prepare for the preview period. While we currently intend to provide a consistent 30-day preview period for ASCQR Program data year-after-year, we believe that retaining some flexibility in this timeline is important in order to ensure that measure data are available for public reporting in a timely fashion. While there may be some variability in the specific dates of a preview period due to data processing and report development issues, we currently publish notifications regarding the availability of preview reports for facilities' review before publication of ASCQR Program measure data through the QualityNet Web site (*https://www.qualitynet.org/dcs/ContentServer?c=Page&pagename=QnetPublic%2FPage%2FQnetTier1&cid=1138115987249*) and direct communication to ASCs. We intend to continue providing ASCs with this advance notice of the preview period because we believe doing so provides ASCs with sufficient time to identify and procure resources needed to ensure timely and accurate review of their ASCQR Program data.

Comment: One commenter suggested that CMS allow a preview period of 60 days for ASCs, rather than the proposed 30-day preview period, because ASCs are generally small providers without dedicated quality measurement personnel on staff. The commenter stated that a 60-day preview period would allow a more appropriate amount

of time for ASCs to retrieve reports and review their data before its publication.

Response: While we understand that a 60-day preview period would allow ASCs more time to review their ASCQR Program data prior to its publication, we believe 30 days provides balance between sufficient time for ASCs to review their data and timely publication. Implementing a longer preview period would affect our ability to publish ASCQR Program data in a timely manner, and likely result in longer delays between ASC performance and public reporting of measure data. We believe that implementing a 30-day preview period, in conjunction with the revised May 15 data submission deadline for data submitted via a CMS online data submission tool (discussed in more detail below), will enable us to publicly report ASCs' performance data significantly faster, providing patients with the most up-to-date information for use in making decisions about their care. Furthermore, 30 days aligns the ASCQR Program with other CMS quality reporting programs as discussed above.

Comment: One commenter requested that CMS provide additional information on the length of time it takes to appeal a misclassification and how CMS intends to address misclassifications within the 30-day preview period.

Response: We interpret the commenter's reference to ''misclassifications'' to mean errors in an ASC's ASCQR Program data. With regards to errors spotted during the preview period, ASCs are directed to contact CMS if there are inaccuracies with regards to measure calculations. ASCs are responsible for ensuring that the underlying measure data are accurate, however, because the preview period is not an opportunity to make corrections to the underlying data.

While the preview period does not serve as a corrections period, ASCs can edit any measure data submitted via an online data submission tool up until the data submission deadline for that measure (80 FR 70533). In addition, although we understand that ASCs cannot currently change QDCs on claims once submitted, or edit measure quality data submitted via an online data submission tool after the submission deadline was passed, we believe it is the responsibility of each ASC to ensure that its data, as reported to CMS, are accurate (80 FR 70533).

After consideration of the public comments we received, we are finalizing our proposals regarding the timing of public display and the preview period for the ASCQR Program as proposed.

C. Administrative Requirements

1. Requirements Regarding QualityNet Account and Security Administrator

We refer readers to the CY 2014 OPPS/ASC final rule with comment period (78 FR 75132 through 75133) for a detailed discussion of the QualityNet security administrator requirements, including setting up a QualityNet account, and the associated timelines, for the CY 2014 payment determination and subsequent years. In the CY 2016 OPPS/ASC final rule with comment period (80 FR 70533), we codified the administrative requirements regarding maintenance of a QualityNet account and security administrator for the ASCQR Program at 42 CFR 416.310(c)(1)(i). In the CY 2017 OPPS/ASC proposed rule (81 FR 45736), we did not propose any changes to these policies.

2. Requirements Regarding Participation Status

We refer readers to the CY 2014 OPPS/ASC final rule with comment period (78 FR 75133 through 75135) for a complete discussion of the participation status requirements for the CY 2014 payment determination and subsequent years. In the CY 2016 OPPS/ASC final rule with comment period (80 FR 70534), we codified these requirements regarding participation status for the ASCQR Program at 42 CFR 416.305. In the CY 2017 OPPS/ASC proposed rule (81 FR 45736), we did not propose any changes to these policies.

D. Form, Manner, and Timing of Data Submitted for the ASCQR Program

1. Requirements Regarding Data Processing and Collection Periods for Claims-Based Measures Using Quality Data Codes (QDCs)

We refer readers to the CY 2014 OPPS/ASC final rule with comment period (78 FR 75135) for a complete summary of the data processing and collection periods for the claims-based measures using QDCs for the CY 2014 payment determination and subsequent years. In the CY 2016 OPPS/ASC final rule with comment period (80 FR 70534), we codified the requirements regarding data processing and collection periods for claims-based measures using QDCs for the ASCQR Program at 42 CFR 416.310(a)(1) and (2). In the CY 2017 OPPS/ASC proposed rule (81 FR 45736), we did not propose any changes to these requirements.

2. Minimum Threshold, Minimum Case Volume, and Data Completeness for Claims-Based Measures Using QDCs

We refer readers to the CY 2014 OPPS/ASC final rule with comment period (78 FR 75135 through 75137) for a complete discussion of the minimum thresholds, minimum case volume, and data completeness for successful reporting for the CY 2014 payment determination and subsequent years. In the CY 2016 OPPS/ASC final rule with comment period (80 FR 75035), we codified our policies regarding the minimum threshold and data completeness for claims-based measures using QDCs for the ASCQR Program at 42 CFR 416.310(a)(3). We also codified our policy regarding the minimum case volume at 42 CFR 416.305(c). In the CY 2017 OPPS/ASC proposed rule (81 FR 45736), we did not propose any changes to these policies.

3. Requirements for Data Submitted Via an Online Data Submission Tool

In the CY 2017 OPPS/ASC proposed rule (81 FR 45736 through 45737), we proposed changes to requirements for data submitted via a CMS online data submission tool (*QualityNet.org*). In the CY 2017 OPPS/ASC proposed rule (81 FR 45736), we did not propose any changes to our policies regarding data submitted via a non-CMS online data submission tool (CDC NHSN Web site), but are summarizing those policies for context below.

a. Requirements for Data Submitted Via a Non-CMS Online Data Submission Tool

We refer readers to CY 2014 OPPS/ASC final rule with comment period (78 FR 75139 through 75140) and CY 2015 OPPS/ASC final rule with comment period (79 FR 66985 through 66986) for our requirements regarding data submitted via a non-CMS online data submission tool (CDC NHSN Web site). We codified our existing policies regarding the data collection time periods for measures involving online data submission and the deadline for data submission via a non-CMS online data submission tool at 42 CFR 416.310(c)(2). Currently, we only have one measure (ASC–8: Influenza Vaccination Coverage among Healthcare Personnel) that is submitted via a non-CMS online data submission tool.

In the CY 2015 OPPS/ASC final rule with comment period, we finalized a submission deadline of May 15 of the year when the influenza season ends for ASC–8: Influenza Vaccination Coverage among Healthcare Personnel (79 FR 66985 through 66986). In the CY 2017

OPPS/ASC proposed rule (81 FR 45736), we did not propose any changes to these requirements.

b. Requirements for Data Submitted Via a CMS Online Data Submission Tool

We refer readers to the CY 2014 OPPS/ASC final rule with comment period (78 FR 75137 through 75139) for our requirements regarding data submitted via a CMS online data submission tool. We are currently using the QualityNet Web site as our CMS online data submission tool: *https://www.qualitynet.org/dcs/ContentServer?c=Page&pagename=QnetPublic%2FPage%2FQnetHomepage&cid=1120143435383*.

In the CY 2014 OPPS/ASC final rule with comment period (78 FR 75137 through 75139), we finalized the data collection time period for quality measures for which data are submitted via a CMS online data submission tool to cover services furnished during the calendar year 2 years prior to the payment determination year. We also finalized our policy that these data will be submitted during the time period of January 1 to August 15 in the year prior to the affected payment determination year. In the CY 2016 OPPS/ASC final rule with comment period, we codified our existing policies regarding the data collection time periods for measures involving online data submission and the deadline for data submission via a CMS online data submission tool at 42 CFR 416.310(c)(1)(ii). In the CY 2017 OPPS/ASC proposed rule (81 FR 45737), we proposed to change the submission deadline from August 15 in the year prior to the affected payment determination year to May 15 in the year prior to the affected payment determination year for all data submitted via a CMS online data submission tool in the ASCQR Program for the CY 2019 payment determination and subsequent years. We also proposed to make a corresponding change to the regulation text at § 416.310(c)(1)(ii) to reflect this policy.

We previously proposed a similar policy to adopt a May 15 submission deadline for all data submitted via a CMS online data submission tool in the CY 2016 OPPS/ASC proposed rule (80 FR 38345). However, we did not finalize that proposal due to public comments received indicating that a May 15 deadline would increase ASC administrative burden by giving ASCs less time to collect and report data, and noting previous technical issues with data submission that required extension of the data submission deadline (80 FR 70535).

However, we believe the May 15 data submission deadline would align the ASCQR Program with the Hospital OQR Program submission deadline (80 FR 70521 through 70522) for data submitted via a CMS online data submission tool. Furthermore, the proposed submission deadlines for measures submitted via a CMS online data submission tool would align the above-listed measures with the submission deadline for ASC–8, resulting in a single deadline for all data submitted via an online data submission tool by ASCs (via CMS and non-CMS online data submission tools). We believe this single deadline would reduce the administrative burden associated with submitting and tracking multiple data submission deadlines for the ASCQR Program. In addition, we believe implementing the proposed May 15 deadline will enable public reporting of these data by December of the same year, thereby enabling us to provide the public with more up-to-date information for use in making decisions about their care. Thus, we believe the benefits of implementing the proposed May 15 submission deadline for data submitted via a CMS online data submission tool outweigh previously stated stakeholder concerns with this deadline.

Therefore, we proposed that data collected for a quality measure for which data are submitted via a CMS online data submission tool must be submitted during the time period of January 1 to May 15 in the year prior to the payment determination year for the CY 2019 payment determination and subsequent years. For example, for the CY 2017 data collection period, ASCs have January 1, 2018 through May 15, 2018 to submit their data for the CY 2019 payment determination.

This policy would apply to the following measures for the CY 2019 payment determination and subsequent years:

- ASC–6: Safe Surgery Checklist Use;
- ASC–7: ASC Facility Volume Data on Selected ASC Surgical Procedures;
- ASC–9: Endoscopy/Polyp Surveillance: Appropriate Follow-Up Interval for Normal Colonoscopy in Average Risk Patients (NQF #0658);
- ASC–10: Endoscopy/Polyp Surveillance: Colonoscopy Interval for Patients with a History of Adenomatous Polyps-Avoidance of Inappropriate Use (NQF #0659); and
- ASC–11: Cataracts: Improvement in Patient's Visual Function within 90 Days Following Cataract Surgery (NQF #1536).[228]

In addition, this policy would apply to the following measures for the CY 2020 payment determination and subsequent years that we finalized above:

- ASC–13: Normothermia Outcome, and
- ASC–14: Unplanned Anterior Vitrectomy.

Lastly, we also proposed to make corresponding changes to the regulation at 42 CFR 416.310(c)(1)(ii) to replace the date ''August 15'' with the date ''May 15.''

We invited public comments on our proposals to change the data submission time period and make corresponding changes to the regulation text for data submitted via a CMS online data submission tool as discussed above.

Comment: Some commenters supported CMS' proposal to move the reporting deadlines for data submitted via a CMS online data submission tool to May 15 because doing so would make ASC quality data available to the public as soon as possible each year and would therefore help stakeholders compare quality among facilities.

Response: We thank the commenters for their support.

Comment: Some commenters did not support the proposal to adopt a May 15 deadline for all data submitted via a CMS online data submission tool for the CY 2019 payment determination and subsequent years, because the commenters believe shortening the data submission time period for these measures will increase ASCs' burden and lead to confusion for ASCs. These commenters further asserted that changing the longstanding data submission deadline for measure data submitted during CY 2017 in this rulemaking may lead to ASCs inadvertently missing the earlier deadline and thereby forfeiting their full payment update. Commenters recommended that CMS retain the current data submission deadlines for data submitted via a CMS online data submission tool or, in the alternative, align the data submission deadline for measures submitted via a CMS online data submission tool on August 15.

Response: While we acknowledge that ASCs may undergo a period of adjustment while changing their reporting processes to meet the May 15 data submission deadline, we believe that aligning the data submission deadlines for measure data submitted via a CMS online data submission tool

[228] We note that ASC–11 is a voluntary measure for the CY 2017 payment determination and subsequent years. This proposal would mean that ASCs that choose to submit data for this measure also would need to submit such data between January 1 and May 15 for the CY 2019 payment determination and subsequent years.

will ultimately streamline and reduce administrative burden on ASCs by reducing the total number of data submission deadlines under the ASCQR Program. Furthermore, one of the primary goals of the ASCQR Program is to publicly report ASC performance data, and moving the data submission deadline for all data submitted via a CMS online data submission tool to May 15 will enable us to publicly report ASCs' performance data by December of the same year. We believe this modified public reporting timeline will provide patients with the most up-to-date information for use in making decisions about their care. Therefore, we believe that any associated burden will be outweighed by the importance of making the public aware of performance data as timely as possible.

We also understand commenters' concerns that shortening the data submission time period for these measures may lead to some confusion for ASCs, but note that this policy affects data submitted for CY 2019 payment determinations, which will be reported during CY 2018. To be clear, this policy will not affect data collected during CY 2016 data collection period and reported during CY 2017 for CY 2018 payment determinations. Therefore, ASCs have an additional year under the current August 15 data submission deadline before the updated May 15 deadline will go into effect. As stated in the CY 2017 OPPS/ASC proposed rule (81 FR 45737), for example, for the CY 2017 data collection period, ASCs have January 1, 2018 through May 15, 2018 to submit their data for the CY 2019 payment determination. We believe this delay will provide ASCs with sufficient time to become familiar with the updated deadline and adjust their data reporting processes accordingly.

Comment: One commenter noted that technical difficulties have delayed ASC reporting in the past, and this commenter was concerned that similar issues could arise each time new measures are incorporated into ASC reporting.

Response: We acknowledge that we have delayed reporting deadlines for the ASCQR Program in the past due to technical issues.[229] However, we have since resolved those concerns, and do not anticipate any further technical issues as a result of expanding the ASCQR Program measure set.

After consideration of the public comments we received, we are finalizing our proposals to change the submission deadline to May 15 in the year prior to the affected payment determination year for all data submitted via a CMS online data submission tool in the ASCQR Program for the CY 2019 payment determination and subsequent years as proposed. We are also finalizing corresponding changes to the regulation at 42 CFR 416.310(c)(1)(ii) to replace the date ''August 15'' with the date ''May 15'' as proposed.

4. Claims-Based Measure Data Requirements for the CY 2019 Payment Determination and Subsequent Years

We refer readers to the CY 2015 OPPS/ASC final rule with comment period (79 FR 66985) and the CY 2016 OPPS/ASC final rule with comment period (80 FR 70536) for our previously adopted policies regarding data processing and collection periods for claims-based measures for the CY 2018 payment determination and subsequent years. In addition, in the CY 2016 OPPS/ASC final rule with comment period (80 FR 70536), we codified these policies at 42 CFR 416.310(b). In the CY 2017 OPPS/ASC proposed rule (81 FR 45737), we did not propose any changes to these requirements.

5. Data Submission Requirements for ASC–15a–e: Outpatient and Ambulatory Surgery Consumer Assessment of Healthcare Providers and Systems (OAS CAHPS) Survey-Based Measures for the CY 2020 Payment Determination and Subsequent Years

As discussed in section XIV.B.4.c. of this final rule with comment period, above, we are adopting five survey-based measures derived from the OAS CAHPS Survey for the CY 2020 payment determination and subsequent years: Three OAS CAHPS composite survey-based measures and two global survey-based measures. In this section of the CY 2017 OPPS/ASC proposed rule (81 FR 45737 through 45738), we proposed requirements related to survey administration and vendors. We note that we are adopting similar policies in the Hospital OQR Program in section XIII.B.5.c. of this final rule with comment period.

a. Survey Requirements

The survey has three administration methods: mail-only; telephone-only; and mixed mode (Mail with telephone follow-up of non-respondents). We refer readers to the Protocols and Guidelines Manual for the OAS CAHPS Survey (*https://oascahps.org/Survey-Materials*) for materials for each mode of survey administration.

For all three modes of administration, we proposed that data collection must be initiated no later than 21 days after the month in which a patient has a surgery or procedure at an ASC and completed within 6 weeks (42 days) after initial contact of eligible patients begins. We proposed that ASCs, via their CMS-approved vendors (discussed below), must make multiple attempts to contact eligible patients unless the patient refuses or the ASC/vendor learns that the patient is ineligible to participate in the survey. In addition, we proposed that ASCs, via their CMS-approved survey vendor, collect survey data for all eligible patients—or a random sample thereof—using the timeline established above and report that data to CMS by the quarterly deadlines established for each data collection period unless the ASC has been exempted from the OAS CAHPS Survey requirements under the low volume exemption discussed in section XIV.B.4.c.(6) of this final rule with comment period, above. These submission deadlines will be posted on the OAS CAHPS Survey Web site (*https://oascahps.org*). Late submissions will not be accepted.

Compliance with the OAS CAHPS Survey protocols and guidelines, including this monthly reporting requirement, will be overseen by CMS or its contractor that will receive approved vendors' monthly submissions, review the data, and analyze the results. As stated previously, all data collection and submission for the OAS CAHPS Survey measures is done at the CCN level, and all eligible ASCs in a CCN would be required to participate in the OAS CAHPS Survey. Therefore, the survey data reported for a CCN must include all eligible patients from all eligible ASCs covered by the CCN. Survey vendors acting on behalf of ASCs must submit data by the specified data submission deadlines. If an ASC's data are submitted after the data submission deadline, it will not fulfill the OAS CAHPS quality reporting requirements. Therefore, we encourage ASCs to be fully appraised of the methods and actions of their survey vendors—especially the vendors' full compliance

[229] ''2013–16–ASC: ASC Web-Based Measures Deadline Extended to August 23.'' Published July 18, 2013. Available at: *https://www.qualitynet.org/dcs/ContentServer?c=Page&pagename=QnetPublic%2FPage%2FQnetTier3&cid=1228772879036.* (Delay due to obtaining access to the QualityNet Secure Portal and going through security requirements. Deadline extended by seven days). ''2015–39–ASC: Important Update—Submission Deadline Extended for Reporting Data Online into QualityNet and NHSN.'' Published July 31, 2015. Available at: *https://www.qualitynet.org/dcs/ContentServer?c=Page&pagename=QnetPublic%2FPage%2FQnetTier3&cid=1228774593984.* (Delay because program is in initial implementation years).

with OAS CAHPS Survey Administration protocols—and to carefully inspect all data warehouse reports in a timely manner.

We note that the use of predictive or auto dialers in telephonic survey administration under certain circumstances is governed by the Telephone Consumer Protection Act (TCPA) (47 U.S.C. 227) and subsequent regulations promulgated by the Federal Communications Commission (FCC) (47 CFR 64.1200) and Federal Trade Commission. We refer readers to the FCC's declaratory ruling released on July 10, 2015 further clarifying the definition of an auto dialer, available at: *https://apps.fcc.gov/edocs_public/attachmatch/FCC-15-72A1.pdf*. In the telephone-only and mixed mode survey administration methods, ASCs and vendors must comply with the regulations discussed above, and any other applicable regulations. To the extent that any existing CMS technical guidance conflicts with the TCPA or its implementing regulations regarding the use of predictive or auto dialers, or any other applicable law, CMS expects vendors to comply with applicable law.

b. Vendor Requirements

To ensure that patients respond to the survey in way that reflects their actual experiences with outpatient surgical care, and are not influenced by the ASC, we proposed that ASCs must contract with a CMS-approved OAS CAHPS Survey vendor to conduct or administer the survey. We believe that a neutral third-party should administer the survey for ASCs and it is our belief that an experienced survey vendor will be best able to ensure reliable results. OAS CAHPS Survey-approved vendors are also already used or required in the following CMS quality programs: The Hospital IQR Program (71 FR 68203 through 68204), the Hospital VBP Program (76 FR 26497, 26502 through 26503, and 26510), the ESRD QIP (76 FR 70269 through 70270), the HH QRP (80 FR 68709 through 68710), and the HQRP (70 FR 47141 through 47207).

Information about the list of approved survey vendors and how to authorize a vendor to collect data on an ASC's behalf is available through the OAS CAHPS Survey Web site at: *https://oascahps.org*. The Web portal has both public and secure (restricted access) sections to ensure the security and privacy of selected interactions. ASCs will need to register on the OAS CAHPS Survey Web site (*https://oascahps.org*) in order to authorize the CMS-approved vendor to administer the survey and submit data on their behalf. Each ASC must then administer (via its vendor) the survey to all eligible patients treated during the data collection period on a monthly basis according to the guidelines in the Protocols and Guidelines Manual (*https://oascahps.org/Survey-Materials*) and report the survey data to CMS on a quarterly basis by the deadlines posted on the OAS CAHPS Survey Web site as stated above.

Moreover, we also proposed to codify these OAS CAHPS Survey administration requirements for ASCs and survey vendors under the ASCQR Program at 42 CFR 416.310(e).

As stated previously, we encourage ASCs to participate in voluntary national implementation of the OAS CAHPS Survey that began in January 2016. This will provide ASCs the opportunity to gain first-hand experience collecting and transmitting OAS CAHPS data without the public reporting of results or ASCQR Program payment implications. For additional information, we refer readers to: *https://oascahps.org/General-Information/National-Implementation*.

We invited public comments on our proposals for the data submission requirements for the five proposed OAS CAHPS Survey-based measures for the CY 2020 payment determination and subsequent years as discussed above.

Comment: One commenter expressed concern that under the proposed ASC–15a–e survey-based measures, an ASC could meet its obligations under the measure by contracting with a CMS-approved, third-party vendor to administer the survey but still receive a reduction in their reimbursements if that vendor does not administer the survey properly or submit the required data to CMS by the data submission deadline.

Response: We acknowledge that it is possible an ASC could fail to meet the requirements under the ASC–15a–e survey-based measures if its vendor fails to administer the survey properly or submit the required data to CMS by the data submission deadline. However, we continue to believe that a neutral third-party should administer the survey for ASCs and it is our belief that an experienced survey vendor will be best able to ensure reliable results. We encourage all ASCs to be fully apprised of the methods and actions of their survey vendors—especially the vendors' full compliance with the OAS CAHPS Survey Administration protocols—and to carefully inspect all data warehouse reports in a timely manner. After the survey vendor submits the data to the OAS CAHPS Data Center, we strongly recommend that hospitals promptly review their two OAS CAHPS feedback reports and submit corrections under the process outlined in the OAS CAHPS Protocol and Guidelines Manual.[230] These reports enable a hospital to ensure that its survey vendor has submitted the data on time, the data has been accepted into the OAS CAHPS Data Center, and the data accepted into the OAS CAHPS Data Center are complete and accurate.

Finally, we note that submission of complete, accurate, and timely data is the responsibility of the ASC. ASCs should check-in regularly with survey vendors to ensure that vendors are properly submitting timely survey data.

Comment: Many commenters recommended that CMS include an electronic method of administration, such as portal messages and/or email, for the OAS CAHPS Survey because electronic methods of survey administration would be more cost effective for ASCs and more convenient for patients than administration via phone or standard mail. One commenter noted electronic survey administration has allowed many ASCs to achieve significant cost savings in the administration of patient surveys, and asserted electronic administration may increase patient response rates. Another commenter noted that recent releases by the U.S. Census Bureau and the National Telecommunications & Information Administration of the U.S. Department of Commerce show that the use of information technology is already prevalent and expanding rapidly amongst all Americans regardless of age, sex, educational attainment, household income, and employment status. One commenter noted that many survey vendors already offer electronic survey options to their customers.

One commenter expressed concern that the proposed OAS CAHPS Survey administration methods may result in biased reporting because older patients are more likely to respond to mail-based or telephone-based surveys than younger patients. The commenter also noted electronic survey administration can reduce facility costs with the reduction of paper use and postage requirements, while also decreasing the time to receiving feedback from patients following their treatment at an ASC. The commenter therefore recommended CMS include electronic administration methods, portal messages and/or email as a method of administration for the OAS CAHPS Survey.

[230] Outpatient and Ambulatory Surgery CAHPS Survey: ''Protocol and Guidelines Manual.'' Available for download at: *https://oascahps.org/Survey-Materials*.

Response: While email and Web-based survey administration modes are not available at this time, we are actively investigating these modes as possible new options for the future. This ongoing investigation includes, among other things, determining whether ASCs receive reliable email addresses from patients, whether there is adequate access to the Internet across all types of patients, and whether implementing a Web-based survey administration method would introduce bias into the survey administration process. However, we note that a previous study investigating the suitability of speech-enabled interactive voice response (SE–IVR) and Web modes for publicly reported surveys of patients' experience of hospital care found lower response rates for mixed-mode administrations including a Web-based option than for mail-only and SE–IVR administration modes.[231] Portal messaging, like systems that are sometimes used to address patient questions, would require a Web portal that patients can access. If this were housed at the facility, patient confidentiality could potentially be an issue. Furthermore, as currently specified, the OAS CAHPS Survey requires that the survey be administered by an approved survey vendor. This is to ensure that patients respond to the survey in a way that reflects their actual experiences with outpatient surgical care, and is not influenced by the hospital. Removing vendors, neutral third parties, could raise issues of objectivity and bias. However, as stated above, we are actively investigating new modes of conducting this survey as possible options for the future. We believe that the data collected by this measure is so significant and important that collecting data and publicly reporting it sooner rather than later outweighs waiting for a Web-based survey administration method to be developed, tested, and implemented nationwide.

Comment: A few commenters expressed concerns regarding the proposed survey administration requirements. One commenter stated that requiring survey vendors make multiple calls to patients regarding the OAS CAHPS Survey may be excessively intrusive to patients, particularly when coupled with a mailed survey. Another commenter asserted that requiring multiple mailings would add considerable expense to survey costs incurred by ASCs in administering the OAS CAHPS Survey. One commenter expressed concern that the OAS CAHPS Survey administration requirement that ASCs, via their CMS-approved vendor, contact a patient multiple times would be very burdensome for ASCs with a diminishing return. These commenters recommended that CMS remove the requirement that ASCs attempt to contact a patient multiple times from the survey administration requirements in order to minimize the burden imposed on ASCs.

Response: As stated in the proposed rule (81 FR 45737), we proposed that ASCs, via their CMS-approved vendors, must make multiple attempts to contact eligible patients unless the patient refuses or the ASC/vendor learns that the patient is ineligible to participate in the survey. We are finalizing this proposal in section XIV.C.5.a. of this final rule with comment period, above. This is also reflected in the OAS CAHPS Survey Protocols and Guidelines. Under the telephone-only and mixed mode survey administration requirements, the vendor does not leave a message for the patient when calling to administer the survey. Further, under the mixed mode with telephone follow-up survey administration, only one follow-up telephone call is made. We believe these administration requirements impose minimal survey response burdens on patients or burdens on ASCs.

The use of a second mailing to improve response rates and reduce survey error comes from survey methodological literature,[232] and is the standard for CAHPS Survey implementation.[233] Data from the OAS CAHPS Survey Mode Experiment in 2015 showed that in a sample size of 3,510 patients, including both mail-only and mixed-mode survey administration, the response rate to the first mailing was approximately 25 percent. By contrast, the final response rate for the mail-only sample after the second mailing was 37 percent. We believe this 12-percent increase highlights the importance of requiring a second mailing in improving survey response rates. In addition to lowering response rates, which can lead to potential bias in the data, we believe implementing a single mailing survey administration option would require increases in the initial sample size for survey administration in order to achieve 300 completed surveys. Thus, we believe the cost savings from not requiring a second mailing would be reduced due to the need for an increased sample size for the initial mailing for reliability.

After consideration of the public comments we received, we are finalizing our proposals for the data submission requirements for the five OAS CAHPS Survey-based measures for the CY 2020 payment determination and subsequent years, as proposed. We also are finalizing, as proposed, to codify these OAS CAHPS Survey administration requirements for ASCs and survey vendors under the ASCQR Program at 42 CFR 416.310(e).

6. Extraordinary Circumstances Extensions or Exemptions for the CY 2019 Payment Determination and Subsequent Years

We refer readers to the FY 2013 IPPS/LTCH PPS final rule (77 FR 53642 through 53643) and the CY 2014 OPPS/ASC final rule with comment period (78 FR 75140 through 75141) for a complete discussion of the ASCQR Program's procedures for extraordinary circumstance extensions or exemptions (ECE) requests for the submission of information required under the ASCQR Program.[234] In the CY 2016 OPPS/ASC final rule with comment period (80 FR 70537), we codified our policies regarding extraordinary circumstances extensions or exemptions at 42 CFR 416.310(d).

In the CY 2017 OPPS/ASC proposed rule (81 FR 45738 through 45739), we proposed one modification to the ASCQR Program's extraordinary circumstances extensions or exemptions policy for the CY 2019 payment determination and subsequent years. Specifically, we proposed to extend the time to submit a request form from within 45 days of the date that the extraordinary circumstance occurred to within 90 days of the date that the extraordinary circumstance occurred. We believe this extended deadline is necessary, because in certain circumstances it may be difficult for ASCs to timely evaluate the impact of an extraordinary event within 45 calendar days. We believe that extending the deadline to 90 calendar days will allow ASCs more time to determine whether it is necessary and appropriate to submit an ECE request and to provide a more comprehensive account of the ''event'' in their forms to

[231] Elliott MN, Brown JA, Lehrman WG, Beckett MK, Hambarsoomian K, Giordano LA, Goldstein EH. A Randomized Experiment Investigating the Suitability of Speech-Enabled IVR and Web Modes for Publicly Reported Surveys of Patients' Experience of Hospital Care. Med Res Rev. 2013 April;70(2):165–184.

[232] Dillman, D. A. 1978. *Mail and Telephone Surveys: The Total Design Method.* New York: Wiley & Sons.

[233] ''Outpatient and Ambulatory Surgery.'' Available at: *https://oascahps.org.*

[234] In the CY 2015 OPPS/ASC final rule with comment period (79 FR 66987), we stated that we will refer to the process as the ''Extraordinary Circumstances Extensions or Exemptions'' process rather than the ''Extraordinary Circumstances Extensions or Waivers'' process.

CMS. For example, if an ASC has suffered damage due to a hurricane on January 1, it would have until March 31 (90 days) to submit an ECE form via the QualityNet Secure Portal, mail, email, or secure fax as instructed on the ECE form. This proposed timeframe (90 calendar days) also aligns with the ECE request deadlines for the Hospital VBP Program (78 FR 50706), the HAC Reduction Program (80 FR 49580), and the Hospital Readmissions Reduction Program (80 FR 48542). We note that, in the FY 2017 IPPS/LTCH PPS final rule (81 FR 57181 through 57182; 81 FR 57231), we finalized a deadline of 90 days following an event causing hardship for the Hospital IQR Program (in non-eCQM circumstances) and for the LTCH QRP Program. In section XIII.D.8. of this final rule with comment period, we are also finalizing a similar deadline of 90 days following an event causing hardship for the Hospital OQR Program.

In addition, we proposed to make a corresponding change to the regulation text at 42 CFR 416.310(d)(1). Specifically, we proposed to state that ASCs may request an extension or exemption within 90 days of the date that the extraordinary circumstance occurred.

We invited public comments on our proposals to extend the submission deadline for an extraordinary circumstances extension or exemption and make corresponding changes to the regulation text to reflect this policy as discussed above.

Comment: Commenters supported CMS' proposal to extend the deadline for submission of an ECE request from within 45 days of the extraordinary event to within 90 days of the extraordinary event because this proposal would give ASCs more time to determine whether it is appropriate to submit a request and would align the ASCQR Program with many of CMS' other quality reporting and value-based purchasing programs.

Response: We thank the commenters for their support.

After consideration of the public comments we received, we are finalizing our proposal to extend the time to submit a request form to within 90 days of the date that the extraordinary circumstance occurred for the CY 2019 payment determination and subsequent years as proposed. We also are finalizing, as proposed, a corresponding change to the regulation text at 42 CFR 416.310(d)(1).

7. ASCQR Program Reconsideration Procedures

We refer readers to the FY 2013 IPPS/LTCH PPS final rule (77 FR 53643 through 53644) and the CY 2014 OPPS/ASC final rule with comment period (78 FR 75141) for a complete discussion of the ASCQR Program's requirements for an informal reconsideration process. In the CY 2016 OPPS/ASC final rule with comment period (80 FR 70537), we finalized one modification to these requirements: that ASCs must submit a reconsideration request to CMS by no later than the first business day on or after March 17 of the affected payment year. We codified this policy at 42 CFR 416.330. In the CY 2017 OPPS/ASC proposed rule (81 FR 45736), we did not propose any changes to this policy.

E. Payment Reduction for ASCs That Fail To Meet the ASCQR Program Requirements

1. Statutory Background

We refer readers to section XV.C.1. of the CY 2014 OPPS/ASC final rule with comment period (78 FR 75131 through 75132) for a detailed discussion of the statutory background regarding payment reductions for ASCs that fail to meet the ASCQR Program requirements.

2. Reduction to the ASC Payment Rates for ASCs That Fail To Meet the ASCQR Program Requirements for a Payment Determination Year

The national unadjusted payment rates for many services paid under the ASC payment system equal the product of the ASC conversion factor and the scaled relative payment weight for the APC to which the service is assigned. Currently, the ASC conversion factor is equal to the conversion factor calculated for the previous year updated by the multifactor productivity (MFP)-adjusted CPI–U update factor, which is the adjustment set forth in section 1833(i)(2)(D)(v) of the Act. The MFP-adjusted CPI–U update factor is the Consumer Price Index for all urban consumers (CPI–U), which currently is the annual update for the ASC payment system, minus the MFP adjustment. As discussed in the CY 2011 MPFS final rule with comment period (75 FR 73397), if the CPI–U is a negative number, the CPI–U would be held to zero. Under the ASCQR Program, any annual update will be reduced by 2.0 percentage points for ASCs that fail to meet the reporting requirements of the ASCQR Program. This reduction applied beginning with the CY 2014 payment rates. For a complete discussion of the calculation of the ASC conversion factor, we refer readers to section XII.G. of this final rule with comment period.

In the CY 2013 OPPS/ASC final rule with comment period (77 FR 68499 through 68500), in order to implement the requirement to reduce the annual update for ASCs that fail to meet the ASCQR Program requirements, we finalized our proposal that we would calculate two conversion factors: a full update conversion factor and an ASCQR Program reduced update conversion factor. We finalized our proposal to calculate the reduced national unadjusted payment rates using the ASCQR Program reduced update conversion factor that would apply to ASCs that fail to meet their quality reporting requirements for that calendar year payment determination. We finalized our proposal that application of the 2.0 percentage point reduction to the annual update may result in the update to the ASC payment system being less than zero prior to the application of the MFP adjustment.

The ASC conversion factor is used to calculate the ASC payment rate for services with the following payment indicators (listed in Addenda AA and BB to the proposed rule, which are available via the Internet on the CMS Web site): ''A2,'' ''G2,'' ''P2,'' ''R2,'' and ''Z2,'' as well as the service portion of device-intensive procedures identified by ''J8.'' We finalized our proposal that payment for all services assigned the payment indicators listed above would be subject to the reduction of the national unadjusted payment rates for applicable ASCs using the ASCQR Program reduced update conversion factor.

The conversion factor is not used to calculate the ASC payment rates for separately payable services that are assigned status indicators other than payment indicators ''A2,'' ''G2,'' ''J8,'' ''P2,'' ''R2,'' and ''Z2.'' These services include separately payable drugs and biologicals, pass-through devices that are contractor-priced, brachytherapy sources that are paid based on the OPPS payment rates, and certain office-based procedures, certain radiology services and diagnostic tests where payment is based on the MPFS nonfacility PE RVU-based amount, and a few other specific services that receive cost-based payment. As a result, we also finalized our proposal that the ASC payment rates for these services would not be reduced for failure to meet the ASCQR Program requirements because the payment rates for these services are not calculated using the ASC conversion factor and, therefore, not affected by reductions to the annual update.

Office-based surgical procedures (performed more than 50 percent of the time in physicians' offices) and separately paid radiology services (excluding covered ancillary radiology services involving certain nuclear medicine procedures or involving the use of contrast agents) are paid at the lesser of the MPFS nonfacility PE RVU-based amounts or the amount calculated under the standard ASC ratesetting methodology. Similarly, in section XII.D.2.b. of the CY 2015 OPPS/ASC final rule with comment period (79 FR 66933 through 66934), we finalized our proposal that payment for the new category of covered ancillary services (that is, certain diagnostic test codes within the medical range of CPT codes for which separate payment is allowed under the OPPS and when they are integral to an ASC covered surgical procedure) will be at the lesser of the MPFS nonfacility PE RVU-based amounts or the rate calculated according to the standard ASC ratesetting methodology. In the CY 2013 OPPS/ASC final rule with comment period (77 FR 68500), we finalized our proposal that the standard ASC ratesetting methodology for this type of comparison would use the ASC conversion factor that has been calculated using the full ASC update adjusted for productivity. This is necessary so that the resulting ASC payment indicator, based on the comparison, assigned to these procedures or services is consistent for each HCPCS code, regardless of whether payment is based on the full update conversion factor or the reduced update conversion factor.

For ASCs that receive the reduced ASC payment for failure to meet the ASCQR Program requirements, we believe that it is both equitable and appropriate that a reduction in the payment for a service should result in proportionately reduced coinsurance liability for beneficiaries. Therefore, in the CY 2013 OPPS/ASC final rule with comment period (77 FR 68500), we finalized our proposal that the Medicare beneficiary's national unadjusted coinsurance for a service to which a reduced national unadjusted payment rate applies will be based on the reduced national unadjusted payment rate.

In that final rule with comment period, we finalized our proposal that all other applicable adjustments to the ASC national unadjusted payment rates would apply in those cases when the annual update is reduced for ASCs that fail to meet the requirements of the ASCQR Program (77 FR 68500). For example, the following standard adjustments would apply to the reduced national unadjusted payment rates: the wage index adjustment; the multiple procedure adjustment; the interrupted procedure adjustment; and the adjustment for devices furnished with full or partial credit or without cost. We believe that these adjustments continue to be equally applicable to payment for ASCs that do not meet the ASCQR Program requirements.

In the CY 2014, CY 2015, and CY 2016 OPPS/ASC final rules with comment periods (78 FR 75132; 79 FR 66981 through 66982; and 80 FR 70537 through 70538, respectively), we did not make any changes to these policies.

In the CY 2017 OPPS/ASC proposed rule (81 FR 45739 through 45740), we did not propose any changes to these policies.

XV. Transplant Outcomes: Restoring the Tolerance Range for Patient and Graft Survival

A. Background

Solid organ transplant programs in the United States are subject to a specialized system of oversight that includes: (1) An organized national system of organ donation and allocation, including a national database that allows for the tracking of transplants and transplant outcomes; (2) formalized policy development, program inspection, and peer review processes under the aegis of the Organ Procurement and Transplantation Network (OPTN); (3) Medicare Conditions of Participation (CoPs) that hold transplant programs accountable for patient and graft (organ) survival for at least 1 year after each recipient's transplant; and (4) a CMS system of onsite survey and certification for Medicare-participating transplant centers. These features mean that transplant programs have been in the vanguard of efforts to hold health care providers accountable not only for acceptable processes, but for patient outcomes as well.

Congress established the framework for a national organ transplantation system in 1984, and the Health Resources and Services Administration (HRSA) and CMS then operationalized the system as a national model of accountable care in the area of solid organ transplantation.[235] The 1984 National Organ and Transplantation Act (NOTA)[236] created the OPTN and Organ Procurement Organizations (OPOs), among other provisions. NOTA also required the establishment of a registry that includes such information respecting patients and transplant procedures as the Secretary deems necessary to an ongoing evaluation of the scientific and clinical status of organ transplantation.[237] The Scientific Registry of Transplant Recipients (SRTR) has served this purpose since 1987. The registry supports the ongoing evaluation of the scientific and clinical status of solid organ transplantation, including kidney, heart, liver, lung, intestine, and pancreas. Data in the SRTR are collected by the OPTN from hospitals and OPOs. The SRTR contains current and past information about the full continuum of transplant activity related to organ donation and wait-list candidates, transplant recipients, and survival statistics. This information is used to help develop evidence-based policy, to support analysis of transplant programs and OPOs, and to encourage research on issues of importance to the transplant community.[238]

The SRTR contains detailed information regarding: (1) Donor characteristics (for example, age, hypertension, diabetes, stroke, and body mass index); (2) organ characteristics (for example, both warm and cold ischemic time); and (3) recipient characteristics (for example, age, race, gender, body mass index, and hypertension status). The SRTR is administered by the Chronic Disease and Research Group of the Minneapolis Medical Research Foundation under a contract with HRSA. The SRTR data are then used to construct the risk profile of a transplant program's organ transplants. The risk models allow the SRTR to calculate an expected survival rate for both patients and grafts (organs) over various periods of time.

Every 6 months, the SRTR publishes a Program Specific Report (PSR) for each transplant program. Each report covers a rolling, retrospective, 2.5-year period. For example, the PSR reports the aggregate number of patient deaths and graft failures that occurred within 1 year after each transplant patient's receipt of an organ. The PSR also compares the actual number of such events with the risk-adjusted number that would be expected, and reports the resulting ratio of observed to expected events (O/E). An O/E ratio of 1.0, for example, means that the transplant program's outcomes were equal to the national outcomes for a patient, donor, and organ risk profile that reasonably matched the risk profile of that particular transplant program, for

[235] Hamilton, T.E. 2009, ''Accountability in Health Care—Transplant Community Offers Leadership,'' *American Journal of Transplantation,* Vol. 9, pp. 1287–1293.

[236] National Organ Transplant Act (NOTA; Pub. L. 98–507), codified at 42 U.S.C. 274, ''Organ procurement and transplantation network.''

[237] 42 U.S.C. 274a, ''Scientific registry.''

[238] Available at: *http://srtr.org/who.aspx.*

the time period under consideration. An O/E ratio of 1.5 means that the patient deaths or graft failures were 150 percent of the risk-adjusted expected number.[239]

On March 30, 2007, we issued a final rule that set out CoPs for solid organ transplant programs (''Medicare Program: Hospital Conditions of Participation: Requirements for Approval and Re-approval of Transplant Centers to Perform Organ Transplants'' (72 FR 15198)). The CoPs for data submission, clinical experience, and outcome requirements are codified at 42 CFR 482.80 and 482.82. The regulations specified that a program would not be in compliance with the CoPs for patient and graft survival if three thresholds were all crossed: (1) The O/E ratio exceeded 1.5; (2) the results were statistically significant (p<.05); and (3) the results were numerically meaningful (that is, the number of observed events minus the expected number is greater than 3). If all three thresholds were crossed over in a single SRTR report, the program was determined to not be in compliance with the CMS standard.

The above three criteria were the same as those used at that time by the OPTN to ''flag'' programs that the OPTN considered to merit deeper inquiry with regard to transplant program performance. However, we implemented the Medicare outcomes requirements in a manner that would assure that a flagged transplant program would first have an opportunity to become engaged with the OPTN peer review process, and improve outcomes, before there was significant CMS involvement. We did so by classifying outcomes that crossed over all three thresholds in a single (most recent) SRTR report (that is, a ''single flag'') as a lower level deficiency (that is, a ''standard-level'' deficiency in CMS terms). A standard-level deficiency requires a hospital to undertake improvement efforts, but continued Medicare participation is not at risk solely due to a single standard-level deficiency. Only programs flagged twice (in two SRTR reports, including the most recent report) within a 2.5-year period have been cited for a ''condition-level'' deficiency where Medicare termination is at risk. Approximately 79 (29.3 percent) of the 270 transplant programs (of all types of solid organs) that were flagged once in the 8-year period from the July 2007 SRTR report through the July 2015 report were not flagged again within a 2.5-year period. The CMS ''two-flag'' approach for citation of a condition-level deficiency allowed an opportunity for the OPTN to take timely action after the first time a program was flagged, and allowed the transplant programs some time to work with the OPTN peer review process and possibly improve outcomes quickly. As a result, almost a third of once flagged programs (29.3 percent) did not require any significant CMS involvement because they were not flagged a second time within a rolling 2.5 year period.

We also determined to make quality improvement the cornerstone of CMS' enforcement of the outcomes standard.[240] Through the ''mitigating factors'' provisions in the regulations for transplant programs at 42 CFR 488.61(g), we allowed a 210-day period for transplant programs with a condition-level outcomes deficiency to implement substantial improvements and demonstrate compliance with more recent data than the data in the available SRTR reports. Further, for programs that were unable to demonstrate compliance by the end of the 210-day period, but were on the right track and had strong institutional support from the hospital to make the necessary improvements for achieving compliance, we generally offered to enter into a voluntary ''Systems Improvement Agreement'' (SIA) with that hospital. An SIA provides a transplant program with additional time (generally 12 months) during which the hospital engages in a structured regimen of quality improvement. The transplant program also has an opportunity to demonstrate compliance with the CMS outcomes requirements before the end of the SIA period. In the FY 2015 IPPS/LTCH PPS final rule (79 FR 50334 through 50344 and 50359 through 50361), we further defined the mitigating factors and SIA processes at 42 CFR 488.61(f), (g), and (h). (We note that, in section XVII.B. of this final rule with comment period, we discuss finalization of a proposal to make additional revisions to § 488.61(h)(2) to clarify provisions relating to a signed SIA remaining in force.)

Through July 2015, we completed the mitigating factors review process for 145 programs that had been cited for condition-level patient or graft volume or outcome requirements that fell below the relevant CMS standards. Of that number, 83 programs (57.2 percent) were approved by the end of the 210-day review process on the basis of program improvements, combined with recent outcomes from which CMS concluded that the program was in present-day compliance. Another 45 programs (31.0 percent) were offered and completed a year-long SIA, while 17 programs (11.7 percent) terminated Medicare participation. CMS tracking data indicate that approximately 90 percent of programs that engaged in an SIA were able to complete the quality improvement regimen and continue Medicare participation after the end of the SIA period.

One-year post-transplant outcomes have improved since 2007 for all organ types, resulting in 1-year post-transplant survival rates that are among the highest in U.S. history for all types of solid organs. For adult kidneys, 1-year graft survival increased nationally from 92.9 percent in CY 2007 to 94.8 percent in 2014, while 1-year patient survival increased nationally from 96.4 percent to 96.9 percent. During this time, 1-year patient survival increased nationally for heart recipients from 88.5 percent to 89.5 percent, for liver recipients from 87.7 percent to 90.8 percent, and for lung recipients from 80.4 percent to 85.7 percent.

Because the CMS outcomes requirement is based on a transplant program's outcomes in relation to the risk-adjusted national average, as national outcomes have improved, it has become much more difficult for an individual transplant program to meet the CMS outcomes standard. This is explained in more detail in section XVI. of this final rule with comment period. We are concerned that transplant programs may elect not to use certain available organs out of fear that such use would adversely affect their outcome statistics, despite the risk adjustment model accounting for differences in both donor organ quality and recipient health. We observed, for example, that the percent of adult kidneys donated and recovered—but not used—increased from 16.6 percent in CY 2006 to 18.3 percent in CY 2007 to 18.7 percent in CY 2014 and 19.3 percent in CY 2015. Even if the number of recovered adult kidneys had remained the same, these percentages of unused kidneys would be of concern. However, the number of recovered kidneys is also increasing, thereby enlarging the impact of the discard rate. The combined effect of (a) more recoveries and (b) a higher percent of unused organs means that the absolute number of recovered but unused adult kidneys increased from 2,632 in CY 2007, for example, to 2,888 in CY 2014 and to 3,159 in CY 2015.

We appreciate that some of the single-year sharp increase in the percent of

[239] Dickinson, D.M., Arrington, C.J., *et al.*, 2008, ''SRTR program-specific reports on outcomes: A guide for the new reader,'' *American Journal of Transplantation,* Vol. 8 (4 PART 2), pp. 1012–1026.

[240] Hamilton, T.E. 2008, ''Improving Organ Transplantation in the U.S.—A Regulatory Perspective,'' *American Journal of Transplantation.* Vol. 8 (12), pp. 2404–2405.

unused adult kidneys that occurred between CY 2006 and CY 2007 (from a previously consistent 16.6 percent rate in the 3 years prior to 2007, to 18.3 percent in 2007) may have been due to many factors, and not just any potential impact that the new CMS outcomes CoP may have had. The CMS regulation, for example, was gradually phased in. The regulation did not take effect until June 28, 2007, and transplant programs had until December 26, 2007 to register with CMS for certification under the new regulation. Other changes also occurred in 2007 that may have had a substantial impact.

In particular, in December 2006, the UNOS, under contract with HRSA, made a new OPTN organ donor data collection and matching system available for voluntary use and improved the data in the system. The OPTN voted to make such use mandatory effective April 30, 2007. The stated goal of the system was to ''facilitate and expedite organ placement.''[241] The system provided for a national list to be generated for each organ, with offers made to patients at transplant centers based on the order of patients on this list. The design of the system made it possible to send multiple offers simultaneously to different transplant programs, in priority order. As the authors of a later study concluded, ''This initially led to an extraordinary increase in the volume of unwanted offers to many centers.''[242]

However, with substantial feedback from transplant programs, the system was improved and provided transplant programs with much more information regarding the available organs and donor characteristics. For example, the system allowed for programs to add more screening criteria, such as differentiation between local and import (for example, national) values, and screening for donors after cardiac death (DCD) with differentiation between local and import offers. In 2008, additional screening features were added, such as maximum acceptable cold ischemic time (CIT), maximum donor body mass index (BMI), and donor history of hypertension, diabetes, and coronary artery disease, among others. Such improvements were designed to allow centers to restrict organ offers to those individuals who the program was most likely to accept. After the introduction of such additional system improvements, the percent of adult kidneys from deceased donors, that were not used, held at an average of 18.2 percent over the next 4 years. More recently, however, the average discard rate has resumed an upward trend, rising to 18.7 percent in CY 2014 and 19.3 percent in CY 2015. We are not aware of any studies that have specifically examined transplant program organ acceptance and discard patterns in relation to their perceptions regarding the CMS organ transplant CoPs. However, we believe that the increased percent of unused adult kidneys, combined with an increase in the number of recovered organs, creates an imperative to action, given the lifesaving benefits of organ transplantation.

Further concerns arise when we examine the use of what historically have been known as ''expanded criteria donor (ECD)'' organs. ECD organs are organs that are deemed transplantable but experience lower rates of functional longevity compared to most other organs. For instance, with the ECD kidneys, characteristics that historically defined an ECD kidney include age of donor at or greater than 60 years, or kidneys from donors who were aged 50–59 years who also had experienced two of the following: Cerebrovascular accident as the cause of death; preexisting hypertension; or terminal serum creatinine greater than 1.5 mg/dl.

Although the SRTR risk-adjustment methods take into account the factors that comprise an ECD designation, ECD kidneys have been the only category of adult kidneys that experienced a decline in the number that were recovered for organ transplantation, from 3,249 in CY 2007 to 2,833 in CY 2015. Acceptance rates for ECD kidneys also declined, from 56.2 percent in CY 2007 to 51.0 percent in CY 2015. There is some evidence that this decline is influenced by other factors, such as the higher costs to the hospital that are associated with ECD kidney use. ECD kidney selection also requires greater sophistication on the part of a transplant program to be able, in a timely manner, to distinguish between the finer features of an ECD kidney that might be appropriate to use compared with one that involves too much risk. Therefore, ECD kidney use may have been a particularly sensitive indicator of risk aversion. We note that, in 2014, the OPTN replaced the ECD kidney designations and implemented a more sophisticated system of adult kidney classification (the kidney donor profile index, KDPI). We believe this new system should help in the decision-making process for kidney acceptance, but may have limited effect on undue risk aversion.

B. Revisions to Performance Thresholds

For the reasons described above, in the CY 2017 OPPS/ASC proposed rule (81 FR 45742 through 45743), we proposed to change the performance threshold at §§ 482.80(c)(2)(ii)(C) and 482.82(c)(2(ii)(C) from 1.5 to 1.85. We stated in the preamble of the March 30, 2007 final rule (72 FR 15220) that ''If we determine in the future that any of the three thresholds is too low or too high, we will propose changes in the threshold through the rulemaking process.'' In the proposed rule, we followed through on that commitment.

The current relevant standard specifies that outcomes would not be acceptable if the ratio of observed patient deaths or graft failures divided by the risk-adjusted expected number, or ''O/E,'' exceeds 1.5. The expected number is based on the national average, adjusted for the patient, organ, and donor risk profile of a transplant program's actual clientele for individuals who received a transplant in the 2.5-year period under consideration in each SRTR report. As the national performance has improved, it has become more difficult for transplant programs to maintain compliance with this CoP. In 2007, for example, an adult kidney transplant program was in compliance with the CMS outcomes standard if there were no more than 10.7 graft losses within 1 year out of 100 transplants. By 2014, that number had decreased to 7.9, a 26-percent reduction in graft losses 7 years later. Similarly, the number of patient deaths that could occur while maintaining compliance with the CoP declined from 5.4 to 4.6 out of every 100 adult kidney transplant recipients. We believe that a change in the threshold from 1.5 to 1.85 would restore the approximate compliance levels for adult kidney transplants that were allowed in 2007 when national performance was not so high. More specifically, a 1.85 threshold would mean that up to 9.7 graft losses out of 100 transplants (within 1 year of transplant) would remain within the new CMS outcomes range (which is slightly fewer than the 10.7 allowed in 2007 but more than the 7.9 allowed in 2015), and up to 5.7 patient deaths out of 100 transplants (within 1 year of transplant) would remain within the CMS range (compared to 5.4 in 2007 and 4.6 in 2015). Through restoring rough parity to 2007 graft failure rates, we hope to encourage transplant centers

[241] Massie AB, Zeger SL, Montgomery RA, Segev DL. The effects of DonorNet 2007 on kidney distribution equity and efficiency. *American Journal of Transplantation,* Vol. 9, pp. 1550–1557.

[242] Gerber DA., Arrington CJ, Taranto SE., Baker T, Sung RS. DonorNet and the Potential Effects on Organ Utilization. *American Journal of Transplantation,* Vol. 10, pp. 1081–1089. Article first published online: 22 MAR 2010. DOI: 10.1111/j.1600–6143.2010.03036.x.

to use more of the increasing number of viable organs.

For consistency and to avoid unneeded complexity, we proposed to use the same 1.85 threshold for all organ types and for both graft and patient survival. We appreciate that a case could instead be made for having different thresholds for different organ types, or a different threshold for graft versus patient survival. For example, if the only consideration was to restore the 2007 effective impact, the threshold for patient survival on the part of heart transplant recipients would be changed to 1.63, while the liver and lung threshold would be 2.00. Similarly, the new threshold for adult kidney graft survival would be 2.02 but for adult kidney patient survival a new threshold would be 1.77. Arguments also may be made for a variety of other thresholds, such as keeping the 1.5 threshold for heart, liver, and lung, on the grounds that there is more statistical room for improvement in outcomes for those types of organs compared to rates for adult kidney survival (which are already quite high). However, instead of a myriad of thresholds, we proposed to adopt a consistent 1.85 threshold for all organ types, and for both graft and patient survival. This is a number that is approximately mid-range between the number that would restore the adult kidney graft tolerance range to the 2007 level, and the number that would do so for adult kidney patient survival. We believe this approach is less confusing than the alternatives, and that it would be advisable to implement the new 1.85 threshold now in a consistent and clear manner, and then to study the effects, before proceeding further. For future consideration, we also may explore other approaches that are aimed at optimizing the effective use of available organs instead of adjusting the CMS outcomes threshold further, such as the potential that a balancing measure (focused specifically on effective use of organs) may be appropriate (which we discuss in section XXIII. (Economic Analyses) of this final rule with comment period).

We also note that the OPTN is examining its own flagging criteria under its new Bayesian methodology, out of concern that the OPTN may be flagging an excessive number of programs for review and contributing to undue risk aversion. The OPTN flagging criteria, both before and after adoption of the new Bayesian methodology, have resulted in more programs being flagged than are cited by CMS. We view this as a purposeful and desirable positioning of CMS as a backstop to the OPTN. We believe that our proposed change would help ensure that, if OPTN also changed its criteria for outcomes review and as a result flagged fewer programs, those programs that are then flagged would still have the opportunity to first engage with the peer review process of the OPTN and might never be in a situation of being cited by CMS.

We invited public comment on this issue. Specifically, we invited comment on whether this proposal is effectively balancing our dual goals of improved beneficiary outcomes and increased beneficiary access. We also reiterate our statement from the March 30, 2007 final rule, that if we find that the thresholds are too low or too high, we will propose changes in future rulemaking.

Comment: Many commenters supported CMS' proposal to raise the threshold for observed/expected events (1-year patient deaths and graft failures) from 1.5 to 1.85 for all organ types. One commenter believed that changing the threshold to 1.85 would appropriately balance the need for outcome requirements standards in the transplant CoPs, while ensuring that the thresholds do not hinder beneficiary access to available organs. Other commenters stated that the proposed change would encourage greater access to transplantation for higher-risk patients who could still benefit from a transplant, thereby improving health outcomes and quality of life and decreasing costs. One commenter stated that the change would help to make solid organs available to patients who need them by not penalizing hospitals that perform higher-risk transplant procedures. Another commenter stated that this proposal is consistent with the OPTN's evaluation of proposed revisions to its criteria for performance review as part of an effort to reduce disincentives to transplant and encourage innovation. One commenter stated that the original threshold was based on the threshold for OPTN Membership and Professional Standards Committee (MPSC) peer review of potentially underperforming transplant centers, was never intended as a regulatory criterion, and that the threshold has always been too stringent, resulting in a high number of false positive citations. This commenter also supported CMS' decision not to adopt the SRTR Bayesian methodology for flagging underperforming transplant centers.

Response: We appreciate the commenters' support for our proposal to increase the threshold for observed/expected events from 1.5 to 1.85 for all organ types in the transplant outcome requirements standards.

Comment: One commenter believed that the proposed changes would bring relevant OPTN policies and CMS standards into alignment. The commenter urged CMS to continue to develop policies and requirements that align current or future standards in an expeditious manner and/or develop regulatory provisions in alignment with OPTN policy that would ensure that changes to OPTN policy are automatically reflected in CMS' standards. The commenter believed that this action would allow the transplant community to ensure that limited resources are focused more on efforts to successfully complete transplants for candidates on a waiting list than on ensuring compliance with multiple, inconsistent standards and requirements.

Response: We appreciate the commenter's support. We agree that future coordination between CMS and OPTN, where appropriate, will support efforts toward more successful transplantations.

Comment: A few commenters stated that a recent study documented a ''survival benefit'' for transplants as opposed to dialysis, even in transplant centers with low performance ratings. One commenter requested that CMS acknowledge this study and use the information to support the development of policies that reduce barriers that currently limit transplant centers in this and future rulemakings. Another commenter believed that transplant outcomes should be considered in the context of patient outcomes in the absence of transplantation. The commenter opined that variations in transplant center performance ratings are clinically insignificant when compared with the outcomes of patients who are not transplanted. The commenter further stated that, for this reason, any regulation that has the potential to reduce access to transplantation, whether by increasing risk aversion or otherwise, warrants careful scrutiny.

Response: We acknowledge the significant issues that are associated with dialysis treatment. We note that the outcome measures within the CoPs establish minimum quality standards for protecting the health and safety of transplant recipients in Medicare-certified facilities.

Comment: A few commenters believed that the proposed increase in the O/E threshold to 1.85 continues to limit access to transplantations. One commenter expressed concern that the proposed change would only impact a few transplant programs and that the increase in the threshold would not

provide a meaningful increase in access to transplantations. Some commenters requested that CMS increase the threshold to at least 2.0. One commenter stated that the threshold of 2.0 more closely approximates the performance threshold for graft survival in 2007. Other commenters opined that the O/E threshold adopted in 2007 has always been too stringent, and that a threshold of at least 2.0 strikes a suitable balance.

Response: At this time, we believe that it is most advisable to implement the proposed 1.85 threshold and study the impacts and effects of that revision. We will consider further changes in the future if data suggest that the threshold is too low or too high.

Comment: A few commenters expressed support for a recent Survey and Certification Memorandum (S & C 16–24—Hospitals) that provided guidance that Medicare approval will generally not be at risk solely due to noncompliance with the outcome standards at 42 CFR 482.80 and 482.82, as long as a transplant program's O/E ratio is within 185 percent of the risk-adjusted expected number.

Response: We believe that this comment is outside the scope of the proposed rule. However, we note that the requirements of this finalized provision will supersede this Survey and Certification Memorandum, and we will consider issuing an updated memorandum in the future if necessary.

Comment: A few commenters stated that, while they supported the proposal to revise the transplant outcome requirements standards, clear data will be required to assess the effects of this change both on organ utilization and patient outcomes. Another commenter noted that future analysis will be required to assess whether the change results in increases in the number of organs transplanted and decreases in organ wastage.

Response: We agree with the commenters.

Comment: One commenter stated that multiple published reports highlight the impact of regulatory thresholds on risk aversion and reduced rates of transplantation and patient listing. The commenter also stated that reports of regulatory oversight reveal a sustained negative impact on transplant activity with no identified decrease in outcomes based on the flagging methodologies.

Response: We understand that these perceptions are present in the transplant community. We proposed the change to the outcome requirements standard in part to address and acknowledge these perceptions regarding risk aversion. However, on a whole, the outcome measures for transplant centers do provide minimal standards of acceptable quality to protect the health and safety of beneficiaries.

Comment: One commenter stated that CMS should work with HRSA to ensure that less egregious deviations from expected practice are handled through the OPTN review process.

Response: We appreciate the commenter's recommendation. However, we believe this comment is outside the scope of the proposed rule.

Comment: One commenter appreciated that CMS acknowledged the need to ensure that SRTR and CMS' requirements are consistent and supported the proposed changes. The commenter recommended that additional attention be given to the current ''disconnect'' between OPO and transplant center outcome measures. The commenter believed that CMS' regulations indirectly discourage OPOs from increasing the recovery of organs from older, ''marginal donors'' because this practice reduces organs transplanted per donor, which will reduce the incentive to aggressively pursue all donors. The commenter stated that these regulations incentivize OPOs to maximize organ retrieval from multi-organ donors, without consideration of whether the organs retrieved are appropriate for transplantation or whether transplantation of these organs will result in positive patient outcomes. The commenter stated that, by contrast, transplant centers are required to meet stringent post-transplant recipient outcome requirements, regardless of donor organ quality. The commenter believed that acceptance of these organs that result in a higher transplant rate, while good for OPOs and patients, may actually hurt the centers if the rate of graft failure is excessive.

Response: We appreciate the commenter's observations. However, we believe that these issues and observations are outside the scope of the proposed rule.

After consideration of the public comments we received, we are finalizing our proposal, without modification, to revise the performance threshold specified at §§ 482.80(c)(2)(ii)(C) and 482.82(c)(2(ii)(C) from 1.5 to 1.85.

XVI. Organ Procurement Organizations (OPOs): Changes to Definitions; Outcome Measures; and Documentation Requirements

A. Background

1. Organ Procurement Organizations (OPOs)

Organ procurement organizations (OPOs) are vital partners in the procurement, distribution, and transplantation of human organs in a safe and equitable manner for all potential transplant recipients. The role of OPOs is critical to ensuring that the maximum possible number of transplantable human organs are available to seriously ill patients who are on a waiting list for an organ transplant. OPOs are responsible for the identification of eligible donors, recovering organs from deceased donors, reporting information to the UNOS and OPTN, and compliance with all CMS outcome and process performance measures.

2. Statutory Provisions

Section 1138(b) of the Act provides the statutory qualifications and requirements that an OPO must meet in order for organ procurement costs to be paid under the Medicare program or the Medicaid program. Among other provisions, section 1138(b) of the Act also specifies that an OPO must operate under a grant made under section 371(a) of the Public Health Service Act (PHS Act) or must be certified or recertified by the Secretary as meeting the standards to be a qualified OPO within a certain time period. Congress has provided that payment may be made for organ procurement cost ''only if'' the OPO meets the performance related standards prescribed by the Secretary. Under these authorities, we established Conditions for Coverage (CfCs) for OPOs that are codified at 42 CFR part 486 and set forth the certification and recertification processes for OPOs.

Section 1102 of the Act gives the Secretary the authority to make and publish such rules and regulations as may be necessary to the efficient administration of the functions that the Secretary is charged with performing under the Act. Moreover, section 1871 of the Act gives the Secretary broad authority to establish regulations that are necessary to carry out the administration of the Medicare program.

3. HHS Initiatives Related to OPO Services

The Advisory Committee on Organ Transplantation (ACOT) was established under the authority of section 222 of the

PHS Act, as amended, and regulations under 42 CFR 121.12. A 2012 recommendation by ACOT stated: ''ACOT recognizes that the current CMS and HRSA/OPTN structure creates unnecessary burdens and inconsistent requirements on transplant centers (TCs) and organ procurement organizations (OPOs) and that the current system lacks responsiveness to advances in TC and OPO performance metrics. The ACOT recommends that the Secretary direct CMS and HRSA to confer with the OPTN, SRTR, the OPO community, and TC representatives to conduct a comprehensive review of regulatory and other requirements, and to promulgate regulatory and policy changes to requirements for OPOs and TCs that unify mutual goals of increasing organ donation, improving recipient outcomes, and reducing organ wastage and administrative burden on TCs and OPOs. These revisions should include, but not be limited to, improved risk adjustment methodologies for TCs and a statistically sound method for yield measures for OPOs.'' [243]

4. Requirements for OPOs

To be an OPO, an entity must meet the applicable requirements of both the Social Security Act and the PHS Act. Among other requirements, the OPO must be certified or recertified by the Secretary as an OPO. To receive payment from the Medicare and Medicaid programs for organ procurement costs, the entity must have an agreement with the Secretary. In addition, under section 1138(b) of the Act, an OPO must meet performance standards prescribed and designated by the Secretary. Among other things, the Secretary is required to establish outcome and process performance measures based on empirical evidence, obtained through reasonable efforts, of organ donor potential and other related factors in each service area of the qualified OPO. An OPO must be a member of and abide by the rules and requirements of the OPTN that have been approved by the Secretary (section 1138(b)(1)(D) of the Act; 42 CFR 486.320).

B. Proposed and Finalized Provisions

1. Definition of ''Eligible Death''

Transplant hospitals and OPOs report data to the OPTN and those data are transmitted on a monthly basis to the SRTR contractor. The OPTN establishes the types and frequencies of the data to be submitted by the OPOs to the SRTR through its policies. The OPTN and SRTR collect and analyze the data pursuant to the HRSA mission to increase organ donation and transplantation. Periodically, the OPTN revises its OPO data reporting policies based on methodologies and clinical practice improvements that enable them to draw more accurate conclusions about donor and organ suitability for transplantation. When the CMS OPO regulations were published on May 31, 2006, the definition for ''eligible death'' at § 486.302 was in alignment with the OPTN definitions at that time. This ''eligible death'' definition has been used by CMS since May 31, 2006 to calculate and determine compliance with the OPO outcomes measures at § 486.318.

The OPTN has approved changes to its ''eligible death'' definition, which is scheduled to go into effect on January 1, 2017. The changes to the OPTN definition [244] are predicted to increase the availability of transplantable organs by: Increasing the maximum age for donation from 70 years of age to 75; replacing the automatic exclusion of patients with Multi-System Organ Failure (MSOF) with clinical criteria for each organ type that specifies such type's suitability for procurement; and implementing policies allowing recovery and transplantation of organs from an HIV positive donor into an HIV positive recipient, consistent with the HIV Organ Policy Equity Act (HOPE Act) (November 21, 2013, Pub. L. 113–51).

The existing definition of ''eligible death'' under the May 31, 2006 CfCs (71 FR 31046 through 31047; 42 CFR 486.302) would not be consistent with this OPTN revised definition. Existing § 486.302 defines this term as ''the death of a patient 70 years old or younger, who ultimately is legally declared brain dead according to hospital policy, independent of family decision regarding donation or availability of next-of-kin, independent of medical examiner or coroner involvement in the case, and independent of local acceptance criteria or transplant center practice . . . ,'' and who does not exhibit active infections or other conditions, including HIV. The definition also sets out several additional general exclusion criteria, including MSOF. If there are inconsistent definitions, the resultant changes in data reported to the OPTN by the OPOs, would inhibit the SRTR's ability to produce the data required by CMS to evaluate OPOs' conformance with § 486.318.

Therefore, in order to ensure more consistent requirements, in the CY 2017 OPPS/ASC proposed rule (81 FR 45743 through 45744), we proposed to replace the current definition for ''eligible death'' at § 486.302 with the upcoming revised OPTN definition of ''eligible death.'' The CMS definition would be revised to include donors up to the age of 75 and replace the automatic exclusion of potential donors with MSOF with the clinical criteria listed in the definition, that specify the suitability for procurement. We requested public comments on our proposed definition. We indicated that if, as a result of the public comments we receive on the proposal, additional changes are necessary to this definition, we will work with the OPTN to harmonize the definition.

Comment: One commenter noted that the changes to the ''eligible death'' definition were approved by the OPTN Board of Directors in June 2013. According to the commenter, following the passage of the HOPE Act on November 21, 2013, a workgroup was formed to review OPTN policies and make recommendations for policy changes to allow for research as outlined in the HOPE Act. The commenter stated that this workgroup considered including patients with HIV as part of the ''eligible death'' definition. However, according to the commenter, because the components of the ''eligible death'' definitions were developed as a comparative metric for OPO performance and are not intended to affect acceptance or allocation, the workgroup recommended no changes to the ''eligible death'' definition components. The commenter believed that the definitions will not impact the use of HIV organs within a HOPE Act research study.

Response: We appreciate the commenter's input. We have retained an exclusion for HIV if the organ is not being recovered for an HIV positive transplant recipient under the definition of ''eligible death.'' We have added the phrase ''consistent with the HIV Organ Policy Equity Act (the HOPE Act)'' to paragraph (8) of the definition of ''eligible death'' under § 486.302 for clarity.

Comment: Several commenters supported the proposed revision to the definition of ''eligible death'' at § 486.302 to be consistent with the revised OPTN definition of ''eligible death.''

Response: We appreciate the commenters' support.

[243] Available at: *http://www.organdonor.gov/legislation/acotrecs55.html.*

[244] Alcorn, James B. (2013). ''Summary of actions taken at OPTN/UNOS Board of Directors Meeting: June 24–25, 2013.'' Available at: *https://optn.transplant.hrsa.gov/media/1277/policynotice_20130701.pdf.*

Comment: One commenter, while supporting the overall effort to align definitions, stated that the new definition of ''eligible death'' is intended to improve reporting consistency and clinical refinement in determination of organ suitability for transplantation. However, the commenter believed that the associated measure itself falls short of meeting the statutory requirements for recertification based on performance measures because the commenter believed that the proposed outcome measures may not be based on empirical data as required by the statute.

Response: We appreciate the commenter's overall support. However, we do not agree that adoption of the OPTN yield metric falls short of statutory requirements for performance measures for OPOs. We believe that the revised measure is based on empirical evidence and will enable more precise measurement of OPO performance because of the multiple risk adjustments that are applied to each individual donation service area (DSA), including environmental factors and patient population.

Comment: Several commenters supported CMS' proposed regulatory changes, which would extend the benefits of transplantation to individuals with both HIV and ESRD by allowing recovery and transplantation of kidneys from HIV positive donors into HIV positive recipients. One commenter stated that the possibility of renal transplantation in HIV donors was explored by an association several years ago and that it was recently suggested that there is potential for approximately 500 people on the donor list who are HIV positive to receive organs from HIV positive people every year.

Response: We appreciate the commenters' support.

Comment: One commenter believed that the proposed changes will promote consistency in requirements between OPTN and CMS and ultimately allow for more transplantable organs and clear requirements between the two organizations. Several commenters stated that the proposed changes to the ''eligible death'' definition (as well as the proposed aggregate donor yield metric and transport documentation) are necessary updates to reflect advances in technology and promote greater utilization of organs.

Response: We appreciate the commenters' support.

Comment: One commenter stated that the donation rate metric is a fundamentally appropriate measure of OPO performance and supported efforts to identify a measure that is an accurate and validated measure. The commenter also supported data collection under the new definition of ''eligible death,'' but disagreed with the proposed adoption of this measure for OPO performance assessment.

Response: We appreciate the commenter's input. The commenter did not provide specifics as to why the commenter disagreed with the proposed adoption of the measure. Therefore, we are unable to respond to the commenter's disagreement.

Comment: One commenter recommended that CMS adopt a donation rate metric defined as a ratio of actual donors over a surrogate measure for the pool of possible organ donors. The commenter believed that the best donation rate measure currently available is the proposed OPTN measure of donation rate and supported the use of this measure while current efforts of OPTN, SRTR, and AOPO members are completed. The commenter noted that the potential for stronger measures of donation rate are on the horizon, and suggested that the measure be named, but not defined in the regulations. The commenter believed that this would allow for a more fluid adoption of improved measures once completed and established by the donation and transplant community.

Response: We appreciate the commenter's recommendation. However, we did not propose to include a donation rate metric as a new outcome measure, and therefore consider this comment to be outside the scope of the proposed rule. We will continue to evaluate the effectiveness of the performance measures for OPOs and will propose changes to the regulations if necessary.

Comment: One commenter supported any regulatory proposals for OPOs that would encourage or expect them to evaluate all potential deaths as a possibility for organ donation regardless of the definition of ''eligible death'' or the number of organs that can be recovered. The commenter requested that CMS continue to reevaluate OPO metrics for performance because organ recovery is so variable throughout the country.

Response: We appreciate the commenter's support. We will continue to evaluate OPO performance measures.

After consideration of the public comments we received, we are finalizing our proposal to replace the current definition of ''eligible death'' at § 486.302 with the revised OPTN definition of ''eligible death.'' The CMS revised definition includes donors up to the age of 75 and replaces the automatic exclusion of potential donors with MSOF with the clinical criteria listed in the definition, that specify the suitability for procurement.

2. Aggregate Donor Yield for OPO Outcome Performance Measures

At the time of publication of the May 31, 2006 OPO regulations, outcome measures specified at §§ 486.318(a)(3)(i) and (ii) and §§ 486.318(b)(3)(i) and (ii) were consistent with yield calculations then utilized by the SRTR. These CMS standards measure the number of organs transplanted per standard criteria donor and expanded criteria donor (donor yield). We have received feedback that the use of this measure has created a hesitancy on the part of OPOs to pursue donors for only one organ due to the impact on the CMS yield measure.

In 2012 (incorrectly referenced in the proposed rule as ''2014''), the SRTR, based upon the use of empirical data, changed the way it calculates aggregate donor yield after extensive research and changes to risk-adjustment criteria. The revised metric, currently in use by the OPTN/SRTR, risk-adjusts based on 29 donor medical characteristics and social complexities. We believe the OPTN/SRTR yield metric accurately predicts the number of organs that may be procured per donor, and each OPO is measured based on the donor pool in its DSA. This methodology is a more accurate measure for organ yield performance and accounts for differences between donor case-mixes across DSAs.

Therefore, in the CY 2017 OPPS/ASC proposed rule (81 FR 45744), we proposed to revise our regulations at § 486.318(a)(3) and § 486.318(b)(3) to be consistent with the current OPTN/SRTR aggregate donor yield metric. We also stated that we intend to revisit and revise the other OPO measures at a future date.

Comment: One commenter noted that the date for the implementation of SRTR's OPO donor yield models was incorrect and stated that this was first produced and used by the OPTN in 2012.

Response: We appreciate the commenter for recognizing the misstatement. We have revised the preamble language of this final rule with comment period to reflect the 2012 date.

Comment: Several commenters supported consistency between the OPTN and CMS in the use of the current SRTR donor yield metric to evaluate OPO performance. The commenters encouraged CMS to operationalize the use of these measures in a way that would provide the OPTN sufficient time to work with an OPO to improve donor yield after they are initially flagged, but

prior to engagement with CMS. The commenters believed that this action would be consistent with the current application of CMS' performance requirements for transplant programs.

Response: We appreciate the commenters' support. While we also appreciate the suggested operationalization for use of these measures, we must measure OPO performance as specified by the regulations. There is delay between our publication of the final rule and its effective date in order to provide an opportunity for OPOs to prepare for the new standard. In addition to the aggregate donor yield measure, there are two other outcome measures pertaining to the donation rate within the OPO CfCs. Measure one is the donation rate of eligible donors as a percentage of eligible deaths, and measure two is the observed donation rate compared to the expected donation rate. We will continue to evaluate our OPO performance measures and will propose additional changes in the future if we believe additional changes are warranted.

Comment: Several commenters supported the proposed methodology for more accurate measures for organ yield performance and accounting for differences between donor case-mixes across DSAs.

Response: We appreciate the commenters' support.

Comment: One commenter expressed concern regarding the utilization of the OPTN proposed definition of ''eligible death'' as a measure of donation potential. The commenter stated that the utilization of these data as part of an overall donation metric does not adhere to the requirement to use empirical evidence to measure OPO potential and performance.

Response: We disagree that the OPTN Yield Metric does not meet the statutory requirement for the development of OPO measures utilizing empirical data. The OPTN Yield Metric was developed based upon, and utilizes, actual data submitted by the OPOs to the OPTN and, therefore, is based on observation or experience.

Comment: One commenter noted that current OPO outcome measures one and two utilize eligible death as part of the calculation and believed the implementation of a revised definition mid-cycle impairs the ability for an OPO to track and adjust its performance as needed to remain compliant. The commenter supported inclusion of the proposed donation metric outlined, but requested that this measure be defined in subregulatory documents to allow for refinement as needed based on changes in the donation and transplantation community.

Response: We appreciate the commenter's support. While we also appreciate the suggested operationalization for use of these measures, we must measure OPO performance as specified in the regulations. There is a delay between our publication of the final rule and its effective date in order to provide an opportunity for OPOs to prepare for the new standard. In addition to the aggregate donor yield measure, there are two other outcome measures pertaining to the donation rate within the OPO CfCs. Measure one is the donation rate of eligible donors as a percentage of eligible deaths, and measure two is the observed donation rate compared to the expected donation rate. We will continue to evaluate our OPO performance measures and will propose additional changes in the future if we believe additional changes are warranted.

Comment: One commenter stated that the current certification cycle for OPOs will be complete in 2018 and, therefore, the new definitions will be implemented within an existing performance cycle. The commenter believed that the required timeframes for data review and evaluation would not be met, based on the adoption of a new definition of ''eligible death'' and a new yield metric for the current certification cycle. The commenter requested clarification on how the data collection timeframes and designation cycle would be reconciled.

Response: We understand that the OPO community has concerns with the implementation of a new definition in the middle of a certification cycle. However, we believe that the change is imperative to support increased organ availability, and we will make any needed adjustments in interpretation through the mid-cycle change. OPOs will continue to receive 6-month data reports indicating compliance and noncompliance with the outcome measures. Each OPO's performance will be measured based on the current definition and yield measures for the time period ending December 31, 2016. The new definition and yield measure will be effective on January 1, 2017. The June 2017 OPO data reports will be based on the new definition and yield metric. OPOs will receive two data reports based on the new definition and yield measure prior to the 2018 survey cycle. We will review both reports during the 2018 survey cycle.

Comment: One commenter requested clarification of the update to the final rule published in December 2013, which changed requirements for OPOs to meet only two of the three outcome measures. The commenter stated that it was unclear if this requirement will remain in place for this next review certification cycle with the proposed revised measures and requested that these facts be considered prior to formalizing changes that may impact the donation and transplantation community in a negative manner.

Another commenter questioned whether, under the proposed revisions, the existing requirement to meet two of the three measures would continue. The commenter supported the CMS 2013 final rule (78 FR 74826) that modified the requirement at § 486.318 to specify that two of the three measures must be met for recertification. The commenter agreed with CMS' statement in that final rule that the requirement to automatically decertify an OPO for failure to meet all three measures was unnecessarily stringent. The commenter stated that, in the absence of a process to review mitigating factors or consider corrective action, as well as given ongoing concerns about the outcome measures themselves, a threshold of compliance with two of the three measures was appropriate.

Response: We appreciate the commenters' concern. The proposed change to Measure 3 will not impact the requirement at § 486.318(a) that states that ''with the exception of OPOs operating exclusively in noncontiguous States, Commonwealths, Territories, or possessions, an OPO must meet two out of the three outcome measures.'' The proposed change also will not impact the requirement at § 486.318(b) that states that ''for OPOs operating exclusively in noncontiguous States, Commonwealths, Territories, or possessions, an OPO must meet two out of the three outcome measures.''

Comment: One commenter believed that CMS intended to replace the three current yield measures with one proposed O/E measure and requested that this be clarified in the final rule with comment period. The commenter noted that current regulations require OPOs to meet two out of three yield measures defined as: (1) The number of organs transplanted per standard criteria donor; (2) the number of organs transplanted per expanded criteria donor; and (3) the number of organs used for research per donor. The commenter supported the concept of replacing these three yield measures with an aggregate O/E measure. However, the commenter also urged CMS to adopt larger regulatory reform that includes process improvement and corrective action opportunities. The

commenter supported, in the context of such a regulatory structure, a CMS requirement that OPOs meet both the donation rate and the yield measures to remain in compliance.

Response: We thank the commenter for expressing this concern. In the proposed rule, we did not clearly articulate our intention to retain the requirement that the number of organs for research per donor continues to be included as one of the yield measure criteria. It was not our intention to eliminate this requirement, and we have revised the regulation text in this final rule with comment period to retain the number of organs for research per donor as a yield measure criterion. The requirements in the 2006 final rule at §§ 486.318(a)(3)(iii) and (b)(3)(iii) have been renumbered as §§ 486.318(a)(3)(ii) and (b)(3)(ii), respectively, in this final rule with comment period due to the reduction in the total number of yield measure criteria included in §§ 486.318(a)(3) and (b)(3). Because there will only be two yield measure criteria under §§ 486.318(a)(3) and (b)(3), the language in the proposed rule that ''at least 2 of the 3 yield measures specified are more than 1 standard deviation below the national mean'' has been removed and replaced with language that now reads ''The OPO data reports, averaged over the 4 years of the recertification cycle, must meet the rules and requirements of the most current OPTN aggregate donor yield measure.'' In response to the commenter's request for CMS to adopt larger regulatory reform, while we understand the concerns raised by the commenter, we believe that the recommendations are outside the scope of the proposed rule.

Comment: One commenter recommended that CMS' definition of the yield measure refer to the OPTN Observed to Expected Risk-Adjusted Process and not to a detailed description of the current methodology.

Response: We appreciate the commenter's observation regarding the detailed description of the components of the revised definition. In accordance with statutory requirements, we must include outcome measures as a regulation.

Comment: One commenter recommended that the number of organs used for research be eliminated from the performance measures. The commenter stated that the measure is imprecisely defined, influenced by physical proximity to research clearinghouse agencies, and conflicts with the organ yield measure.

Response: We appreciate the commenter's input. In the proposed rule (81 FR 45776), our proposed amendments to §§ 486.318(a)(3) and (b)(3) did not propose to eliminate the performance measure on research. Our regulation is consistent with the Pancreatic Islet Cell Transplantation Act which requires that pancreata used for islet cell research be counted for OPO certification.

Comment: One commenter stated that the current proposed changes present modest progress in improving definitions for and measures of OPO performance. However, the commenter believed that the most pressing and significant components of regulatory reform have not been addressed. The commenter further stated that regulatory change was needed to develop and implement outcome measures that have technical integrity, are meaningful and understandable, and drive towards increasing the number of transplants that save more lives, through a defined process for continuous improvement in establishing risk-adjusted, verifiable and meaningful measures of performance, that are not misaligned with transplant program outcome measures.

Specifically, the commenter recommended that CMS:

- Establish a process of continuous OPO performance measurement and monitoring over a rolling 36-month period, updated in 6 month intervals.
- Establish a preemptive review and corrective action process to be implemented before an OPO falls out of compliance with outcome measures.
- Establish a process for OPOs that fall out of compliance with outcome measures, to include the ability to request a review of mitigating factors and/or the ability to enter a formal corrective action process.
- Define two distinct OPO outcome measures in the regulation (the Donation Measure and the Yield Measure). Define the methodology for calculating the outcome measures outside of the regulation to allow for future refinement and adjustment of the calculation as needed and as the data and science advance.
- Establish OPTN/SRTR oversight responsibilities for development, ongoing review and refinement of the two OPO outcome measure algorithms and calculations, with enhanced OPO representation. This oversight group should include equal OPO and transplant representation.

Response: While we understand the concerns raised by the commenter, we believe that the recommendations are outside the scope of the proposed rule. However, we will consider these comments for future rulemaking.

Comment: One commenter stated that the current yield metrics provide alternative performance thresholds for OPOs operating exclusively in noncontiguous U.S. States, commonwealths, territories, or possessions. The commenter expressed concern that, while the proposed OPTN/SRTR yield metric includes in the risk model a variable for geographic location, the unique challenges faced by these OPOs may not be sufficiently identified and accounted for in the current risk model. The commenter asked what provisions CMS would include for appropriate evaluation for OPOs operations exclusively in these regions.

Response: Due to the specificity of the risk adjustments in the proposed yield metric, which are based on 29 risk factors regarding donor medical characteristics and social complexities, the metric accurately predicts the number of organs that may be procured per donor, and each OPO is measured based on the donor pool in its DSA. This methodology is a more accurate measure for organ yield performance and accounts for differences among donor case-mixes across DSAs.

Comment: One commenter stated that the proposed changes would further advance efforts to foster quality improvement by modernizing the quantitative criteria for both performance standards for transplant centers and the conditions of participation for OPOs.

Response: We appreciate the commenter's support.

Comment: One commenter noted that the OPTN system compares each OPO's actual donor yield with its expected donor yield, given the characteristics of the OPO's donor pool and that the OPTN's Membership and Professional Standards Committee will monitor results and review OPOs that meet each of the following three criteria:

- Observed (O) transplants per 100 donors minus Expected (E) transplants per 100 donors is less than -10, that is, more than 10 fewer organs transplanted than expected per 100 donors.
- O divided by E (O/E) is less than 0.9, that is, more than 10 percent fewer transplanted organs than expected.
- O/E is statistically significantly lower than 1.0 using a two-sided p-value of less than 0.05.

Response: We appreciate the commenter's input.

Comment: One commenter recommended that measures be defined outside of the regulations to allow for refinement as needed, based on changes in the donation and transplantation community. The commenter also

requested that donor yield measures and its utilization of this measure should include the ability for OPOs to submit corrective action plans similar to what is allowed in the OPTN construct, noting mitigating factors as needed if found to be noncompliant.

Response: We appreciate the commenter's input. However, in order to ensure adequate notice and to provide the public an opportunity to participate in establishing the legal standards, we establish the OPO performance measures by regulation.

After consideration of the public comments we received, we are finalizing our proposal to revise our regulations at §§ 486.318(a)(3) and (b)(3) to be consistent with the current OPTN/SRTR aggregate donor yield metric.

3. Organ Preparation and Transport—Documentation With the Organ

In the CY 2017 OPPS/ASC proposed rule (81 FR 45744), we proposed to revise § 486.346(b), which currently requires that an OPO send complete documentation of donor information to the transplant center along with the organ. The regulation specifically lists documents that must be copied and sent by the OPO to include: Donor evaluations; the complete record of the donor's management; documentation of consent; documentation of the pronouncement of death; and documentation for determining organ quality. This requirement has resulted in an extremely large volume of donor record materials being copied and sent to the transplant centers by the OPOs with the organ. However, all these data can now be accessed by the transplant center electronically. The OPOs utilize an intercommunicative Web-based system to enter data that may be received and reviewed electronically by transplant centers.

Therefore, we proposed to revise § 486.346(b) to no longer require that paper documentation, with the exception of blood typing and infectious disease information, be sent with the organ to the receiving transplant center. We also proposed a revision to § 486.346(b) to make it consistent with current OPTN policy which requires that blood type source documentation and infectious disease testing results be physically sent in hard copy with the organ. The reduction in the amount of hard copy documentation that is packaged and shipped with each organ would increase OPO transplant coordinators' time, allowing them to focus on donor management and organ preparation. This proposal would not restrict the necessary donor information sent to transplant hospitals because all other donor information could be accessed electronically by the transplant center.

Comment: One commenter noted a discrepancy pertaining to the entity to which OPOs submit data and advised CMS that transplant hospitals and OPOs report data to the OPTN and those data are transmitted on a monthly basis to the SRTR contractor.

Response: We appreciate the commenter's recognition of the discrepancy. We have revised the preamble language in this final rule with comment period to provide that transplant hospitals and OPOs report data to the OPTN and that those data are transmitted on a monthly basis to the SRTR contractor.

Comment: One commenter noted a policy citation discrepancy between OPTN and CMS' proposal to revise § 486.346(b) to make it consistent with current OPTN policy at 16.5.A. Organ Documentation, which requires that blood type source documentation and infectious disease testing results be physically sent in hard copy with the organ. The commenter applauded CMS' proposal to align both OPTN and CMS requirements. The commenter stated that the issues of not utilizing current technology, inefficient use of time, and unnecessary misdirection of resources away from donors and their families were brought to light during numerous discovery observations made during the development of the OPTN electronic tracking and transport project. According to the commenter, the OPTN policy change was designed to limit physical paperwork sent with the organ down to key elements, ABO results and infectious disease results, and expressed full support for the proposed CMS change.

Response: We appreciate the commenter's input and clarification. We have revised the preamble language of this final rule with comment period to remove the specific reference citations to an OPTN policy.

Comment: Several commenters supported the proposal to revise § 486.346(b) to no longer require that paper documentation, with the exception of blood typing and infectious disease information, be sent with the organ to the receiving transplant center. In addition, one commenter supported the revision for documentation requirements for donor records to be in alignment with OPTN policy.

Response: We appreciate the commenters' support.

Comment: One commenter supported the provisions to reduce the administrative burden of copying records that are available electronically. The commenter suggested that CMS require a minimum timeframe for preservation of electronic access to the records for the transplant centers. The commenter also suggested that the OPOs complete a specified data set in the electronic system and that transplant centers have access to any of the records that have been typically included in the packet accompanying the organ. Another commenter also supported the proposal and stated its appreciation for CMS' efforts to streamline the process by reducing paperwork burdens.

Response: We appreciate the commenters' support. The commenter's suggestion regarding a retention timeframe is outside the scope of the proposed rule.

After consideration of the public comments we received, we are adopting as final without modification the revision of § 486.346(b) to make it consistent with current OPTN policy, which requires that blood type source documentation and infectious disease testing results be the only records required to be physically sent in hard copy with the organ.

XVII. Transplant Enforcement Technical Corrections and Other Revisions to 42 CFR 488.61

A. Technical Correction to Transplant Enforcement Regulatory References

In the CY 2017 OPPS/ASC proposed rule (81 FR 45744), we proposed a technical correction to preamble and regulatory language we recently adopted regarding enforcement provisions for organ transplant centers. In the FY 2015 IPPS/LTCH PPS final rule (79 FR 50338), we inadvertently made a typographical error in the final citations in a response to a commenter and stated, ''[i]n the final regulation, at § 488.61(f)(1) and elsewhere, we therefore limit the mitigating factors provision to deficiencies cited for noncompliance with the data submission, clinical experience, or outcomes requirements specified at § 488.80 and § 488.82.'' However, the transplant center data submission, clinical experience, and outcomes requirements are actually specified at 42 CFR 482.80 and 482.82, and not within Part 488; moreover, Part 488 does not contain a § 488.80 or § 488.82. We wish to correct this typographical error; the response should read as follows: ''In the final regulation, at § 488.61(f)(1) and elsewhere, we therefore limit the mitigating factors provision to deficiencies cited for noncompliance with the data submission, clinical experience, or outcomes requirements specified at § 482.80 and § 482.82.''

We also proposed to amend § 488.61(f)(1) which was added in that final rule (79 FR 50359) to correct the same incorrect citations.

Comment: One commenter supported CMS' vigilance to address needed technical corrections and clarifications.

Response: We appreciate the commenter's support.

After consideration of the public comments we received, we are finalizing our proposals to make technical corrections to the preamble language and regulatory text of § 488.61(f) in the FY 2015 IPPS/LTCH PPS final rule regarding enforcement provisions for organ transplant centers described above.

B. Other Revisions to 42 CFR 488.61

Under current § 488.61(f)(3), transplant programs must notify CMS of their intent to request mitigating factors approval within 10 days and the time period for submission of mitigating factor materials is 120 days. Current § 488.61(f)(3) does not specify how these time periods are to be computed.

In the CY 2017 OPPS/ASC proposed rule (81 FR 45745), we proposed to amend § 488.61(f)(3) to extend the due date for programs to notify CMS of their intent to request mitigating factors approval from 10 days to 14 calendar days, and to clarify that the time period for submission of the mitigating factors information is calculated in calendar days (that is, 120 calendar days).

In addition, as part of our improvement efforts, in the proposed rule, we proposed to revise § 488.61(h)(2) to clarify that a signed SIA with a transplant program remains in force even if a subsequent SRTR report indicates that the transplant program has restored compliance with the Medicare CoPs, except that CMS, in its sole discretion, may shorten the timeframe or allow modification to any portion of the elements of the SIA in such a case.

Comment: One commenter opposed the proposal that a signed Systems Improvement Agreement remain in force even if a subsequent SRTR report indicates that the program has regained compliance with the CoPs because continuing the SIA would result in staff and financial implications and possible loss of referrals. One commenter supported the proposal and one commenter indicated that it understood CMS' proposal to revise § 488.61(h)(2) to provide that a signed SIA remains in force even if a subsequent SRTR report indicates that the transplant program has regained compliance.

Response: We believe that our estimated cost for a transplant SIA program of $250,000 is reasonable, as it is based on reports from programs that have actually completed such agreements in the past. We appreciate that the costs may be higher (or lower), depending on the extent of the improvements the hospital identifies as needed and chooses to undertake. We believe that the additional portion of the proposed rule, which includes the ability for CMS to shorten or modify the timeframes of the SIA provides an opportunity for CMS to end the SIA early if the program has regained compliance and has procedures in place to ensure that compliance is maintained. We will determine whether the program has procedures for maintaining compliance on a case-by-case basis prior to ending the SIA.

Comment: A few commenters supported the proposed revisions to 42 CFR 488.61 to clarify and extend the timeframe to submit a letter of intent and other materials to apply for mitigating factors.

Response: We appreciate the commenters' support.

Comment: One commenter supported CMS' proposal to extend and clarify the timeframes for transplant centers to notify the agency of the intent to request a mitigating factors approval and submit the relevant data for review. Specifically, the commenter agreed that CMS should extend the notification period from 10 days to 14 calendar days and clarify that the timeframe to submit mitigating factors materials is 120 calendar days.

Response: We appreciate the commenter's support.

After consideration of the public comments we received, we are finalizing our proposal, without modification, to amend § 488.61(f)(3) to extend the due date for programs to notify CMS of their intent to request mitigating factors approval from 10 days to 14 calendar days, and to clarify that the time period for submission of the mitigating factors information is calculated in calendar days (that is, 120 calendar days). In addition, we are finalizing our proposal to revise § 488.61(h)(2) to clarify that a signed SIA with a transplant program remains in force even if a subsequent SRTR report indicates that the transplant program has restored compliance with the Medicare CoPs, except that CMS, in its sole discretion, may shorten the timeframe or allow modification to any portion of the elements of the SIA in such a case.

XVIII. Changes to the Medicare and Medicaid Electronic Health Record (EHR) Incentive Programs

A. Background

The American Recovery and Reinvestment Act of 2009 (ARRA) (Pub. L. 111–5), which included the Health Information Technology for Economic and Clinical Health Act (HITECH Act), amended Titles XVIII and XIX of the Act to authorize incentive payments and Medicare payment adjustments for eligible professionals (EPs), eligible hospitals, critical access hospitals (CAHs), and Medicare Advantage (MA) organizations to promote the adoption and meaningful use of certified EHR technology (CEHRT). Sections 1848(o), 1853(l) and (m), 1886(n), and 1814(l) of the Act provide the statutory basis for the Medicare incentive payments made to meaningful EHR users. These provisions govern EPs, MA organizations (for certain qualifying EPs and hospitals that meaningfully use CEHRT), subsection (d) hospitals and CAHs respectively.

Sections 1848(a)(7), 1853(l) and (m), 1886(b)(3)(B), and 1814(l) of the Act also establish downward payment adjustments, beginning with calendar or fiscal year 2015, for EPs, MA organizations, subsection (d) hospitals, and CAHs that are not meaningful users of CEHRT for certain associated EHR reporting periods.

In the October 16, 2015 **Federal Register**, we published a final rule titled ''Medicare and Medicaid Programs; Electronic Health Record Incentive Program—Stage 3 and Modifications to Meaningful Use in 2015 Through 2017'' (80 FR 62761 through 62955), hereinafter referred to as the ''2015 EHR Incentive Programs Final Rule,'' [245] which in part aligned the Modified Stage 2 measures with Stage 3 measures, aligned EHR reporting periods with the calendar year, and aligned aspects of the EHR Incentive Programs with other CMS quality reporting programs.

On October 14, 2016, we posted on our Web site the Medicare Program; Merit-based Incentive Payment System (MIPS) and Alternative Payment Model (APM) Incentive under the Physician Fee Schedule, and Criteria for Physician-Focused Payment Models final rule with comment period (CMS–5517–FC) (hereinafter referred to as the ''2016 MIPS and APMs final rule with

[245] We also published two correction notices for the 2015 EHR Incentive Programs Final Rule, making corrections and correcting amendments (81 FR 11447 through 11449; 81 FR 34908 through 34909).

comment period'').[246] The 2016 MIPS and APMs final rule with comment period establishes the MIPS, a new program for certain Medicare-enrolled practitioners. MIPS consolidates components of three existing programs, the Physician Quality Reporting System (PQRS), the Physician Value-Based Payment Modifier (VM), and the Medicare EHR Incentive Program for EPs, and focuses on quality—both a set of evidence-based, specialty-specific standards as well as practice-based improvement activities; cost; and use of CEHRT to support interoperability and advanced quality objectives in a single, cohesive program that avoids redundancies.

B. Summary of Final Policies Included in This Final Rule With Comment Period

In this final rule with comment period, we are adopting final policies based on the proposals in the CY 2017 OPPS/ASC proposed rule (81 FR 45745 through 45753) to continue advancement of certified EHR technology utilization, focusing on interoperability and data sharing. We proposed to eliminate the Clinical Decision Support (CDS) and Computerized Provider Order Entry (CPOE) objectives and measures for eligible hospitals and CAHs attesting under the Medicare EHR Incentive Program for Modified Stage 2 and Stage 3 for 2017 and subsequent years. We also proposed to reduce the thresholds of a subset of the remaining objectives and measures in Modified Stage 2 for 2017 and in Stage 3 for 2017 and 2018 for eligible hospitals and CAHs attesting under the Medicare EHR Incentive Program. In addition, we proposed to update the Modified Stage 2 and Stage 3 measures with a new naming convention to allow for easier reference to a given measure (81 FR 45748 and 45752). These proposed changes would not apply to eligible hospitals and CAHs that attest to meaningful use under their State's Medicaid EHR Incentive Program. These eligible hospitals and CAHs would continue to attest to their State Medicaid agencies on the measures and objectives finalized in the 2015 EHR Incentive Programs Final Rule.

In the CY 2017 OPPS/ASC proposed rule, we did not expressly address the effect these proposals would have on eligible hospitals and CAHs that are eligible to participate in both the Medicare and Medicaid EHR Incentive Programs. These hospitals may be eligible for an incentive payment under Medicare for meaningful use of CEHRT or subject to the Medicare payment reduction for failing to demonstrate meaningful use; in addition, they may be eligible to earn a Medicaid incentive payment for meaningful use. We refer to these hospitals in this section of the final rule with comment period as ''dual-eligible'' hospitals. As discussed in our responses to the comments below, we are finalizing these proposed changes to the objectives and measures for 2017 and 2018 for all eligible hospitals and CAHs that submit an attestation to CMS, including dual-eligible hospitals that are eligible to participate in both the Medicare and Medicaid EHR Incentive Programs. We also are making further, minor, refinements to the new naming conventions.

We proposed to change the EHR reporting period in 2016 to any continuous 90 day period within CY 2016 for all returning EPs, eligible hospitals and CAHs that have previously demonstrated meaningful use in the Medicare and Medicaid EHR Incentive Programs (81 FR 45753). For the reasons discussed in section XVIII.D.1. of this final rule with comment period, we are finalizing a 90-day EHR reporting period in both CYs 2016 and 2017 for all returning participants.

We proposed to require EPs, eligible hospitals and CAHs that have not successfully demonstrated meaningful use in a prior year and are seeking to demonstrate meaningful use for the first time in 2017 to avoid the 2018 payment adjustment by attesting by October 1, 2017 to the Modified Stage 2 objectives and measures(81 FR 45753 through 45754). In this final rule with comment period, we are adopting this requirement as proposed.

We proposed a one-time significant hardship exception from the 2018 payment adjustment for certain EPs who are new participants in the EHR Incentive Program in 2017 and are transitioning to MIPS in 2017, as well as an application process (81 FR 45754 through 45755). In this final rule with comment period, we are finalizing this policy as proposed.

We proposed to change the policy on measure calculations for actions outside the EHR reporting period for the Medicare and Medicaid EHR Incentive Programs (81 FR 45755). We are adopting a final policy that, for all meaningful use measures, unless otherwise specified, actions included in the numerator must occur within the EHR reporting period if that period is a full calendar year, or if it is less than a full calendar year, within the calendar year in which the EHR reporting period occurs. In addition, we are finalizing that this requirement applies beginning in calendar year 2017.

C. Revisions to Objectives and Measures for Eligible Hospitals and CAHs

In the CY 2017 OPPS/ASC proposed rule (81 FR 45746 through 45753), we made two proposals regarding the objectives and measures of meaningful use for eligible hospitals and CAHs attesting under the Medicare EHR Incentive Program. One of these proposals would eliminate the Clinical Decision Support (CDS) and Computerized Provider Order Entry (CPOE) objectives and measures for eligible hospitals and CAHs attesting under the Medicare EHR Incentive Program for 2017 and subsequent years in an effort to reduce reporting burden for eligible hospitals and CAHs. The second proposal would reduce the reporting thresholds for a subset of the remaining Modified Stage 2 objectives and measures for 2017 and Stage 3 objectives and measures for 2017 and 2018 to Modified Stage 2 thresholds. We note that the Stage 3 Request/Accept Summary of Care measure under the Health Information Exchange objective is a new measure in Stage 3, therefore the proposed reduction in the threshold is not based on Modified Stage 2 thresholds.

In the proposed rule, our goal was to propose changes to the objectives and measures of meaningful use that we expect would reduce administrative burden and enable hospitals and CAHs to focus more on patient care.

We invited public comment on our proposals.

Comment: Commenters stated that having two different sets of meaningful use requirements, one for State Medicaid and one for Medicare would be a reporting burden for health systems that have providers that participate in both the Medicare and Medicaid EHR Incentive Programs. They stated that the best way to reduce the administrative burden would be to align all programs to the same threshold requirements and the same measures (or as close as possible) because there are many different programs to report to now, including the EHR Incentive Program for Medicaid providers and MIPS, for Medicare EPs, and each is proposed to have similar, but different measures.

Response: The MACRA requires the establishment of the MIPS for eligible clinicians, which is a new program that

[246] The 2016 MIPS and APMs final rule with comment period also has been posted on the *Regulations.gov* Web site at: *https://www.regulations.gov/document?D=CMS-2016-0060-3921*, and is expected to be published in the **Federal Register** on November 4, 2016.

includes aspects of three existing programs (PQRS, VM, and the Medicare EHR Incentive Program for EPs) and will have an effect on Part B payments to MIPS eligible clinicians beginning in CY 2019. Under section 101(b) of the MACRA, the payment adjustment for EPs under the Medicare EHR Incentive Program will end after CY 2018. The MACRA did not make changes to the Medicare EHR Incentive Program for eligible hospitals and CAHs or to the Medicaid EHR Incentive Program, and thus our ability to adopt modifications to this program for hospitals remains constrained by the relevant provisions of the HITECH Act. Both the MIPS and the Medicare EHR Incentive Program for eligible hospitals and CAHs have different statutory requirements, which limit our ability to align the measures and thresholds between these two programs.

Comment: Several commenters supported the flexibility proposed but believed the requirements remained burdensome and complicated, which could have a negative effect on the quality of patient care.

Some commenters expressed concerns about meeting the requirements through relatively untested technology and functionalities related to application programming interfaces (APIs) and continue to have concerns about practicability of the Modified Stage 2 objectives and measures as well as the Stage 3 objectives and measures, including the ability of providers to satisfy the objectives and measures. Some commenters recommended allowing for a testing period in which providers would not incur penalties, thereby allowing new technologies to become more widely available and facilitate greater use.

Many commenters also expressed concern about the potential impact the timing of the rule will have on their success and indicated there may be a heavy reporting burden for providers.

Response: We recognize clinical workflows and maintaining documentation may require modifications upon implementation of the requirements in this final rule with comment period for eligible hospitals and CAHs attesting under Medicare and Medicaid. However, we believe the modifications will be minimal and the reporting burden may be reduced, as we are eliminating the CDS and CPOE objectives and associated measures (although the functionalities supporting these measures are still required in CEHRT). In addition, we are reducing the thresholds for a subset of remaining measures. We believe these final policies will help reduce administrative burdens and allow providers to focus more on patient care.

We believe that interoperability and EHR functionalities will continue to advance prior to and after implementation of the technology certified to the 2015 Edition, which should increase providers' success in meeting the objectives and associated measures of the program. Furthermore, healthcare providers that experience significant issues with their technology vendors may submit an application for a significant hardship exception from the Medicare payment adjustment.

We also recognize the commenters' concerns regarding the timing of the publication of this final rule with comment period. For 2016, we proposed to shorten the EHR reporting period based on stakeholders' concerns that additional time was needed to update CEHRT systems, implement APIs for Stage 3 and transition to MIPS for certain EPs. In addition, we proposed certain Medicare EPs who are new participants in 2017 and who are transitioning to MIPS in 2017 may apply for a one-time significant hardship exception from the 2018 payment adjustment.

Comment: A few commenters requested confirmation on whether dual-eligible hospitals will be able to attest to the Medicare meaningful use requirements with CMS, and if State Medicaid programs will be able to rely on the Medicare attestations to determine Medicaid EHR Incentive Program payment eligibility.

Response: Dual-eligible hospitals attesting to CMS via such systems as the Hospital IQR Program reporting portal (81 FR 45754) will attest based on the revised objectives and measures established in this final rule with comment period for 2017 and 2018. State Medicaid agencies will be able to rely on these Medicare attestations to determine whether these hospitals qualify for incentive payments under the Medicaid EHR Incentive Program. Medicaid-only hospitals and dual-eligible hospitals that choose to attest directly to a State for the State's Medicaid EHR Incentive Program will continue to attest to the measures and objectives as finalized in the 2015 EHR Incentive Programs Final Rule (80 FR 62762 through 62955).

Comment: One commenter recommended that the proposed changes to meaningful use should apply in 2016 instead of 2017 as proposed.

Response: We disagree that the removal of the CDS and CPOE objectives and measures or reduction of thresholds for a subset of the remaining objectives and measures should begin in CY 2016 as this would require upgrades to our attestation system within a short period of time, which would be costly and difficult to implement.

We also note that we received a few comments indicating opposition to CMS having direct access to a facility's EHR for data abstraction, the States' inability to confirm duplicate payment status and obtain national data necessary to run and monitor the Medicaid EHR Incentive Program, and application of the same proposed advancing care information requirements for both Medicare clinicians participating in MIPS and Medicaid clinicians participating in the Medicaid EHR Incentive Program. We are not addressing these comments because we consider them to be outside the scope of the proposed rule.

1. Removal of the Clinical Decision Support (CDS) and Computerized Provider Order Entry (CPOE) Objectives and Measures for Eligible Hospitals and CAHs

We proposed to amend 42 CFR 495.22 (by revising § 495.22(e) and by adding a new § 495.22(f)) and by revising 42 CFR 495.24 to eliminate the CDS and CPOE objectives and associated measures (currently found at 42 CFR 495.22(e)(2)(iii) and (e)(3)(iii)) and 42 CFR 495.24(d)(3)(ii) and (d)(4)(ii)) for eligible hospitals and CAHs attesting under the Medicare EHR Incentive Program beginning with the EHR reporting period in calendar year 2017. In the proposed rule (81 FR 45745), we indicated this proposal would not apply to eligible hospitals and CAHs attesting under a State's Medicaid EHR Incentive Program due to the burden of updating technology and reporting systems which would incur both additional costs and time. In the 2015 EHR Incentive Programs Final Rule (80 FR 62782 through 62783), we finalized a methodology for evaluating whether objectives and measures have become topped out and, if so, whether a particular objective or measure should be considered for removal from the EHR Incentive Program. We applied the following two criteria, which are similar to the criteria used in the Hospital IQR and Hospital VBP Programs (79 FR 50203): (1) Statistically indistinguishable performance at the 75th and 99th percentile, and (2) performance distribution curves at the 25th, 50th, and 75th percentiles are compared to the required measure threshold. Through this analysis it was determined the CPOE objective and measures were topped out (81 FR 45746).

We also proposed to remove the CDS objective and its associated measures which do not have percentage-based thresholds (hospitals attest ''yes/no'' to these measures) and therefore, cannot be measured by statistical analysis. However, we noted that 99 percent of eligible hospitals and CAHs have successfully attested ''yes'' to meeting these measures based on attestation data for 2015 and believe that the high level of successful attestation indicates achievement of widespread adoption of this objective and its associated measures among eligible hospitals and CAHs.

In the 2015 EHR Incentive Programs Final Rule, we also established that, for measures that were removed, the technology requirements would still be a part of the definition of CEHRT. We noted in the proposed rule (81 FR 45746) that the CDS and CPOE objectives and associated measures that we proposed to remove for eligible hospitals and CAHs would still be required as part of the eligible hospital's or CAH's CEHRT. However, eligible hospitals and CAHs attesting to meaningful use under Medicare would not be required to report on those measures under this proposal.

We invited public comment on our proposals.

Comment: Several commenters supported the elimination of the CDS and CPOE objectives and associated measures as they agreed that it would decrease administrative burden, improve provider satisfaction, and would no longer provide useful performance information.

Response: We thank the commenters for their support. As we stated in the proposed rule (81 FR 45746), we proposed the removal of these objectives and associated measures to reduce the reporting burden on providers for measures already achieving widespread adoption and with the goal to reduce administrative burden and allow a greater focus on patient care. As noted in the proposed rule (81 FR 45746), performance data for the objectives and associated measures have already achieved widespread adoption and are now considered topped out based on high performance.

Comment: One commenter suggested that CMS consider ''sidelining'' CDS as a temporary measure. A few commenters disagreed with the proposal to eliminate the CDS measure because it contributes to improving quality and patient care. The commenters expressed concern that the functionality would no longer be used, which would jeopardize other patient centered uses associated with CDS leading to regression in facilities which made progress in this area.

Response: We reiterate that the technology requirements for CDS would still be a required part of the definition of CEHRT for provider use. We encourage providers to continue to use functionalities that are important to their patient base or practice even if reporting on performance is no longer required for the EHR Incentive Programs.

Comment: A few commenters requested clarification on whether dually eligible hospitals need to attest to the CPOE and CDS measures in order to receive their Medicaid EHR Incentive payment.

Response: As previously mentioned, in this final rule with comment period we are aligning the removal of the CPOE and CDS objectives and measures for dual-eligible hospitals that attest to CMS for both Medicare and Medicaid. Therefore, dual-eligible hospitals attesting to CMS will attest based on the revised objectives and measures established in this final rule with comment period and will not attest to the CPOE and CDS objectives and measures. However, eligible hospitals and CAHs attesting to a State Medicaid agency will attest to the objectives and measures as established in the 2015 EHR Incentive Programs Final Rule, which include the CDS and CPOE objectives and measures.

After consideration of the public comments we received, we are finalizing our proposal to remove the CDS and CPOE objectives and measures. In summary, we are finalizing the removal of the CDS and CPOE objectives and measures beginning in 2017 for eligible hospitals and CAHs attesting to CMS, including dual-eligible hospitals that are attesting to CMS for both the Medicare and Medicaid EHR Incentive Programs.

2. Reduction of Measure Thresholds for Eligible Hospitals and CAHs for 2017 and 2018

In the CY 2017 OPPS/ASC proposed rule (81 FR 45746 through 45748), we proposed to reduce a subset of the thresholds for eligible hospitals and CAHs attesting under the Medicare EHR Incentive Program for EHR reporting periods in calendar year 2017 for Modified Stage 2 and in calendar years 2017 and 2018 for Stage 3. As previously noted, this proposal would not apply to eligible hospitals and CAHs attesting under a State's Medicaid EHR Incentive Program. We believe this proposal would reduce the hospital and CAH reporting burden, allowing eligible hospitals and CAHs attesting under the Medicare EHR Incentive Program to focus more on providing quality patient care, as well as focus on updating and optimizing CEHRT functionalities to sufficiently meet the requirements of the EHR Incentive Program and prepare for Stage 3 of meaningful use. In addition, we proposed to update the Modified Stage 2 measures with a new naming convention to allow for easier reference to a given measure (81 FR 45747).

We note that section 1886(n)(3)(A) of the Act requires the Secretary to seek to improve the use of EHRs and health care quality over time by requiring more stringent measures of meaningful use. We intend to adopt more stringent measures in future rulemaking and will continue to evaluate the program requirements and seek input from eligible hospitals and CAHs on how the measures could be made more stringent in future years of the EHR Incentive Programs.

We invited public comment on our proposals.

Comment: Many commenters agreed with reducing thresholds for eligible hospitals for the remaining Modified Stage 2 measures in 2017 and Stage 3 measures in 2017 and 2018 because it would reduce administrative burden, resolve some of the challenges in meeting thresholds, and allow providers to best utilize health IT in their practice.

Response: We thank the commenters for their support. As we stated in the proposed rule (81 FR 45746 through45753), we believe that reducing thresholds would decrease administrative burdens in order for the healthcare providers to focus on providing more quality patient care and updating and optimizing CEHRT functionalities to meet the requirements and prepare for Stage 3. We agree with commenters regarding some of the threshold challenges that hospitals have experienced, and therefore considered the concerns via written correspondence and proposed a reduction in thresholds accordingly.

Comment: A few commenters expressed concern that the threshold reduction proposals for Stage 2 and 3 objectives will slow progress to improve health care quality through use of CEHRT. A few commenters stated the threshold reduction proposals for selected objectives and measures may not be sufficient and hospitals will still struggle to meet them, such as objectives and measures that require patient action.

Response: We disagree that the threshold reduction proposals will slow progress in terms of improving health care quality or advancements in the use of CEHRT. Our proposal was intended

to be responsive to concerns we have received from various stakeholders regarding the additional work required to effectively implement technologies and workflows to meet current thresholds. We note the threshold reductions are generally at the Modified Stage 2 level, which would maintain current requirements and are not believed to hinder progress on interoperability or improving patient care. Instead, we believe this will allow for greater focus on updating and optimizing EHR functionalities in preparation for Stage 3 and the implementation of technology certified to the 2015 Edition. As we stated in the proposed rule (81 FR 45747), we recognize the fact that eligible hospitals and CAHs may need additional time to educate patients on how to use health information technology and we believe that reducing the thresholds for 2017 and 2018 would provide additional time for eligible hospitals and CAHs to determine the best ways to communicate the importance for patients to access their medical information. If we reduce these measures even further, we believe this would stifle innovation in health IT and not encourage the widespread adoption of CEHRT.

a. Changes to the Objectives and Measures for Modified Stage 2 (42 CFR 495.22) in 2017

In the proposed rule, for EHR reporting periods in calendar year 2017, we proposed to modify the threshold of the Modified Stage 2 View, Download or Transmit (VDT) measure under the Patient Electronic Access objective established in the 2015 EHR Incentive Programs Final Rule (80 FR 62846 through 62848), and this proposed modification would apply to eligible hospitals and CAHs attesting under the Medicare EHR Incentive Program. We also proposed to update the Modified Stage 2 measures with a new naming convention to allow for easier reference to a given measure, and to align with the measure nomenclature proposed for the MIPS. For the reasons previously stated, these proposals would not apply to eligible hospitals and CAHs attesting under a State's Medicaid EHR Incentive Program.

Specifically, we proposed to revise section 495.22(e) to specify that the current Modified Stage 2 meaningful use objectives and measures apply for EPs for 2015 through 2017, for eligible hospitals and CAHs attesting under a State's Medicaid EHR Incentive Program for 2015 through 2017, and for eligible hospitals and CAHs attesting under the Medicare EHR Incentive Program for 2015 and 2016. We proposed to add a new § 495.22(f) that includes the meaningful use objectives and measures with the proposed modifications discussed below that would be applicable only to eligible hospitals and CAHs attesting under the Medicare EHR Incentive Program for an EHR reporting period in calendar year 2017. We also proposed a new naming convention for certain measures (shown in the table at 81 FR 45748) as well as minor conforming changes to §§ 495.22(a), (c)(1), and (d)(1).

We did not receive any public comments specific to the proposed updated naming conventions for those measures in Modified Stage 2, and therefore are finalizing the proposed updated naming conventions with further minor refinements. The naming conventions are included in the table below.

Patient Electronic Access (VDT) (42 CFR 495.22(f)(8)(ii)(B))

View, Download or Transmit (VDT): At least 1 patient (or patient-authorized representative) who is discharged from the inpatient or emergency department (POS 21 or 23) of an eligible hospital or CAH during the EHR reporting period views, downloads or transmits to a third party his or her health information during the EHR reporting period.

- Denominator: Number of unique patients discharged from the inpatient or emergency department (POS 21 or 23) of the eligible hospital or CAH during the EHR reporting period.
- Numerator: The number of patients (or patient-authorized representatives) in the denominator who view, download, or transmit to a third party their health information.
- Threshold: The numerator and denominator must be reported and the numerator must be equal to or greater than 1.
- Exclusion: Any eligible hospital or CAH that is located in a county that does not have 50 percent or more of its housing units with 4Mbps broadband availability according to the latest information available from the FCC on the first day of the EHR reporting period.
- Proposed Modification to the VDT Measure Threshold

For eligible hospitals and CAHs attesting under the Medicare EHR Incentive Program, we proposed to reduce the threshold of the VDT measure from more than 5 percent to at least one patient. We proposed to reduce the threshold because we have heard from stakeholders including hospitals and hospital associations that they have faced significant challenges in implementing the objectives and measures that require patient action. These challenges included, but are not limited to, patients who have limited knowledge of, proficiency with, and access to information technology, as well as patients declining to access the portals provided by the eligible hospital or CAH to view, download, and transmit their health information via this platform.

We invited public comment on our proposals.

Comment: Several commenters supported the reduction in this threshold to at least one patient because it provides additional time to accustom patients to electronic access of their health information and enhance their portal with additional functionalities.

Response: We thank commenters for their support. As we stated in the proposed rule (81 FR 45747), we recognize the fact that eligible hospitals and CAHs may need additional time to educate patients on how to use health information technology, and we believe that reducing the thresholds for 2017 and 2018 would provide additional time for eligible hospitals and CAHs to determine the best ways to communicate the importance for patients to access their medical information.

Comment: One commenter expressed concern about this measure because it requires patient action and it includes factors outside of the commenter's control because some patients do not want to view their information or have access to the Internet.

Response: We thank the commenter for the feedback. We believe that providers do have a role in educating patients about the importance of engaging with their health information to build understanding and more informed decision making about their health and their care. We believe providers can also play an essential role in improving patients' health literacy. We also acknowledged the concerns stakeholders have had with patient action measures in the proposed rule, which led us to propose a reduction in threshold for measures such as VDT. We believe the reduction in threshold will allow providers additional time to determine the best ways to educate patients on the importance of accessing their health care information, and assist them to access their health information electronically. As technology continues to advance, we believe that more patients will have access to the Internet, allowing them to access their health information through the various formats provided by the eligible hospitals and CAHs.

After consideration of the public comments we received, we are finalizing the proposed reduction to the VDT measure threshold. Specifically, we are finalizing the VDT measure threshold as equal to or greater than one patient for Modified Stage 2 in 2017 for eligible hospitals and CAHs attesting to CMS. This includes dual-eligible hospitals that are attesting to CMS for both the Medicare and Medicaid EHR Incentive Programs. This reduced threshold does not apply to eligible hospitals and CAHs attesting to a State for the Medicaid EHR Incentive Program.

The objective and measure are as follows:

Patient Electronic Access (VDT) (42 CFR 495.22(f)(8)(ii)(B))

Objective: Provide patients the ability to view online, download, or transmit their health information within 36 hours of hospital discharge.

View, Download or Transmit (VDT): At least 1 patient (or patient-authorized representative) who is discharged from the inpatient or emergency department (POS 21 or 23) of an eligible hospital or CAH during the EHR reporting period views, downloads or transmits to a third party his or her health information during the EHR reporting period.

- Denominator: Number of unique patients discharged from the inpatient or emergency department (POS 21 or 23) of the eligible hospital or CAH during the EHR reporting period.
- Numerator: The number of patients (or patient-authorized representatives) in the denominator who view, download, or transmit to a third party their health information.
- Threshold: The numerator and denominator must be reported and the numerator must be equal to or greater than 1.
- Exclusion: Any eligible hospital or CAH that is located in a county that does not have 50 percent or more of its housing units with 4Mbps broadband availability according to the latest information available from the FCC on the first day of the EHR reporting period.

MODIFIED STAGE 2 OBJECTIVES AND MEASURES IN 2017 FOR ELIGIBLE HOSPITALS AND CAHS ATTESTING TO CMS

Objective	Previous measure name/ reference	Measure name	Threshold requirement
Protect Patient Health Information	Measure	Security Risk Analysis	Yes/No attestation.
CDS (Clinical Decision Support) *	Measure 1	Clinical Decision Support Interventions.	Five CDS.
	Measure 2	Drug Interaction and Drug-Allergy Checks.	Yes/No.
CPOE (Computerized Provider Order Entry) *.	Measure 1	Medication Orders	>60%
	Measure 2	Laboratory Orders	>30%
	Measure 3	Radiology Orders	>30%
Electronic Prescribing **	Measure	e-Prescribing	>10%
Health Information Exchange	Measure	Health Information Exchange	>10%
Patient Specific Education	Eligible Hospital/CAH Measure	Patient-Specific Education	>10%
Medication Reconciliation	Measure	Medication Reconciliation	>50%
Patient Electronic Access	Eligible Hospital/CAH Measure 1	Provide Patient Access	>50%
	Eligible Hospital/CAH Measure 2	View, Download or Transmit (VDT) ***.	At least 1 patient.
Public Health Reporting	Immunization Reporting	Immunization Registry reporting	Public Health Reporting to 3 Registries.
	Syndromic Surveillance Reporting	Syndromic Surveillance Reporting.	
	Specialized Registry Reporting	Specialized Registry Reporting.	
	Electronic Reportable Laboratory Result Reporting.	Electronic Reportable Laboratory Result Reporting.	

* We note that we are finalizing our policy to remove CDS and CPOE for eligible hospitals and CAHs attesting to CMS in section XVIII.C. of this final rule with comment period.
** We note that, in the proposed rule (81 FR 45748), we referred to this objective as "eRx (electronic prescribing)".
*** We note that in the proposed rule (81 FR 45748), we referred to this measure as the "View Download Transmit Measure".

b. Changes to the Objectives and Measures for Stage 3 (42 CFR 495.24) in 2017 and 2018

For EHR reporting periods in 2017 and 2018, we proposed to modify a subset of the Stage 3 measure thresholds established in the 2015 EHR Incentive Programs Final Rule (80 FR 62829 through 62871) that are currently codified at 42 CFR 495.24, and these proposed modifications would apply to eligible hospitals and CAHs attesting under the Medicare EHR Incentive Program. For the reasons previously stated, these proposed modifications would not apply to eligible hospitals and CAHs attesting under a State's Medicaid EHR Incentive Program. We also proposed, beginning in 2017, in proposed 42 CFR 495.24(c) and (d), to update the measures for EPs, eligible hospitals and CAHs with a new naming convention to allow for easier reference to a given measure, and to align with the measure nomenclature proposed for the MIPS (we refer readers to the table in the proposed rule at 81 FR 45752).

We did not receive any public comments specific to the updated naming conventions for those measures in Stage 3, and therefore are finalizing the proposed updated naming conventions with further minor refinements. The naming conventions are included in the table below.

We invited public comment on our proposals.

Comment: A few commenters stated that the electronic prescribing threshold is too high and recommended that it remain at 10 percent for Stage 3 as the measure is still extremely new for hospitals.

One commenter stated that including controlled substances should continue to be optional since provider and vendor readiness issues are still being addressed. The commenter sought clarification on the flexibility to include or exclude controlled substances depending on a provider's situation. The commenter also expressed disappointment that CMS did not

propose revisions to the additional Stage 3 measure thresholds, specifically electronic prescribing and patient-generated health data. The commenter urged CMS to modify these thresholds in the final rule with comment period.

Response: We are not maintaining the Stage 2 10 percent threshold for the electronic prescribing measure for eligible hospitals and CAHs for Stage 3 because the attestation data through March 2015 indicates that eligible hospitals in Stage 2 met the threshold in the 1st (30 percent), 2nd (53 percent) and 3rd (80 percent) quartile (*https://www.cms.gov/Regulations-and-Guidance/Legislation/EHRIncentivePrograms/Downloads/AttestationPerformanceData_Feb2015.pdf* (page 27)). We believe an increase is warranted based on this attestation data indicating hospitals were successful in meeting the threshold.

We would like to clarify that providers have flexibility to include or exclude controlled substances in the denominator for the Stage 3 electronic prescribing objective and measure. We refer commenters to the discussion in the 2016 MIPS and APMs proposed rule (81 FR 28227) regarding this topic, which was finalized as proposed in the 2016 MIPS and APMs final rule with comment period.

(1) Objective: Patient Electronic Access to Health Information (42 CFR 495.24(c)(5))

Objective: The eligible hospital or CAH provides patients (or patient-authorized representatives) with timely electronic access to their health information and patient-specific education.

Provide Patient Access: For more than 50 percent of all unique patients discharged from the eligible hospital or CAH inpatient or emergency department (POS 21 or 23): (1) The patient (or the patient-authorized representative) is provided timely access to view online, download, and transmit his or her health information; and (2) the provider ensures the patient's health information is available for the patient (or patient-authorized representative) to access using any application of their choice that is configured to meet the technical specifications of the application programming interfaces (APIs) in the provider's CEHRT.

- Denominator: The number of unique patients discharged from an eligible hospital or CAH inpatient or emergency department (POS 21 or 23) during the EHR reporting period.
- Numerator: The number of patients in the denominator (or patient-authorized representatives) who are provided timely access to health information to view online, download, and transmit to a third party and to access using an application of their choice that is configured meet the technical specifications of the API in the provider's CEHRT.
- Threshold: The resulting percentage must be more than 50 percent in order for a provider to meet this measure.
- Exclusion: Any eligible hospital or CAH that is located in a county that does not have 50 percent or more of its housing units with 4Mbps broadband availability according to the latest information available from the FCC on the first day of the EHR reporting period.
- Proposed Modification to the Provide Patient Access Threshold for Eligible Hospitals and CAHs Attesting Under the Medicare EHR Incentive Program

We proposed to reduce the threshold for the Provide Patient Access measure for eligible hospitals and CAHs attesting under the Medicare EHR Incentive Program from more than 80 percent to more than 50 percent. In the 2015 EHR Incentive Programs Final Rule (80 FR 62846), we finalized that providers in Stage 3 would be required to offer all four functionalities (view, download, transmit and access through an API) to their patients.

We continued to hear from health IT vendors through correspondence regarding concerns about the implementation of APIs for Stage 3, indicating, in part that application development is in a fledgling state, and thus it might be very difficult for hospitals to be ready to achieve the 80 percent threshold by the time Stage 3 is required starting in January 2018 and that API requirements outlined in the 2015 EHR Incentive Programs Final Rule could place an excessive burden on hospitals because application development has not been entirely market tested and widely accepted amongst the entire industry. Vendors also expressed concerns around the likely issues surrounding compatibility and varying API interface functionalities that could possibly hinder interoperability among certified EHR technology. We proposed to reduce the threshold based on the concerns voiced by these vendors and believe the Modified Stage 2 threshold of more than 50 percent is reasonable.

We invited public comment on our proposals.

Comment: Many commenters supported the reduction of the Provide Patient Access threshold to greater than 50 percent because it would provide greater flexibility.

Response: We thank commenters for their support. We believe through reducing the threshold to greater than 50 percent we are providing eligible hospitals and CAHs with increased flexibility and additional time needed to communicate and educate the importance for patience to access their medical information.

Comment: One commenter requested clarification on whether providers are obligated to make only the API available, and not also the application(s) that could use the API.

Response: For health care providers to implement an API under this measure, they would need to fully enable the API functionality in such a way that any application chosen by a patient would enable them to gain access to their individual health information. The information provided in the application should be configured to meet the technical specifications of the API. We refer the commenter to the 2015 EHR Incentive Programs Final Rule (80 FR 64842) for additional information on API requirements.

Comment: A few commenters stated that not all patients electronically access their health information based on a variety of factors such as technology literacy and access of technology, and the provider should be able to make the decision on how health information is communicated to their patients. The commenters recommended that CMS propose additional methods of meeting this objective that better reflect differences in patient literacy and levels of access.

Response: We acknowledged in the proposed rule the difficulties stakeholders had with the Provide Patient Access measure which led us to propose a reduction in this threshold. We do not believe we need to propose additional methods of meeting this objective. We previously stated in the 2015 EHR Incentive Programs Final Rule that providers may still provide patients with paper based educational materials and information, if the provider deems such an action beneficial and of use to the patient. We would simply no longer require or allow providers to manually count and report on these paper-based exchanges beginning in Stage 3 (80 FR 62783 through 62784).

Patient-Specific Education: The eligible hospital or CAH must use clinically relevant information from CEHRT to identify patient-specific educational resources and provide electronic access to those materials to more than 10 percent of unique patients discharged from the eligible hospital or CAH inpatient or emergency department

(POS 21 or 23) during the EHR reporting period.

• Denominator: The number of unique patients discharged from an eligible hospital or CAH inpatient or emergency department (POS 21 or 23) during the EHR reporting period.

• Numerator: The number of patients in the denominator who were provided electronic access to patient-specific educational resources using clinically relevant information identified from CEHRT during the EHR reporting period.

• Threshold: The resulting percentage must be more than 10 percent in order for a provider to meet this measure.

• Exclusions: Any eligible hospital or CAH will be excluded from the measure if it is located in a county that does not have 50 percent or more of their housing units with 4Mbps broadband availability according to the latest information available from the FCC at the start of the EHR reporting period.

• Proposed Modification to the Patient Specific Education Measure threshold for Eligible Hospitals and CAHs Attesting Under the Medicare EHR Incentive Program

We proposed to reduce the threshold for the Patient-Specific Education measure for eligible hospitals and CAHs attesting under the Medicare EHR Incentive Program from more than 35 percent to more than 10 percent. We continued to receive written correspondences from hospitals and hospital associations expressing their concerns that the vast majority of patients ask for and are given patient education materials at the time of discharge, usually in print form. These stakeholders indicated that they believe patients benefit from this information at the time of their interaction with the healthcare professionals in the inpatient or emergency department settings of the hospital. Requiring hospitals to make patient education materials available electronically, which would be accessed after the patient is discharged, requires hospitals to set up a process and workflow that these stakeholders describe as administratively burdensome and the benefit would be diminished for patients who have limited knowledge of, proficiency with or access to information technology or patients who request paper based educational resources.

We invited public comment on our proposal.

Comment: Several commenters supported the reduction of the threshold to greater than 10 percent and indicated this will reduce reporting burden.

Response: We thank commenters for their support. As noted in the proposed rule (81 FR 45749), we believe this reduction in threshold will provide hospitals the ability to continue to meet the needs of their patients while allowing additional time for advancements on workflows and processes to make patient-educational materials available electronically after discharge.

Comment: A few commenters believed that the reduction in the threshold does not address concerns that patient education must be tailored to meet the needs of the patients, which may not include electronic methods, and urged CMS to consider alternative methods of meeting this objective.

Response: As previously stated, we do not believe we need to propose additional methods for meeting this objective. We previously stated in the 2015 EHR Incentive Programs Final Rule that providers may still provide patients with paper based educational materials and information, if the provider deems such an action beneficial and of use to the patient. We would simply no longer require or allow providers to manually count and report on these paper-based exchanges beginning in Stage 3 (80 FR 62783 through 62784).

After consideration of the public comments we received, we are finalizing the reduction to the thresholds. Specifically, we are finalizing for the Provide Patient Access measure a threshold of more than 50 percent and for the Patient-Specific Education measure a threshold of more than 10 percent for eligible hospitals and CAHs attesting to CMS, including dual-eligible hospitals that are attesting to CMS for both the Medicare and Medicaid EHR Incentive Programs. These reduced thresholds do not apply to eligible hospitals and CAHs attesting to a State for the Medicaid EHR Incentive Program.

The objective and measures are as follows:

Objective: Patient Electronic Access to Health Information (42 CFR 495.24(c)(5))

Objective: The eligible hospital or CAH provides patients (or patient-authorized representatives) with timely electronic access to their health information and patient-specific education.

Provide Patient Access: For more than 50 percent of all unique patients discharged from the eligible hospital or CAH inpatient or emergency department (POS 21 or 23): (1) The patient (or the patient-authorized representative) is provided timely access to view online, download, and transmit his or her health information; and (2) the provider ensures the patient's health information is available for the patient (or patient-authorized representative) to access using any application of their choice that is configured to meet the technical specifications of the application programming interfaces (APIs) in the provider's CEHRT.

• Denominator: The number of unique patients discharged from an eligible hospital or CAH inpatient or emergency department (POS 21 or 23) during the EHR reporting period.

• Numerator: The number of patients in the denominator (or patient-authorized representatives) who are provided timely access to health information to view online, download, and transmit to a third party and to access using an application of their choice that is configured to meet the technical specifications of the API in the provider's CEHRT.

• Threshold: The resulting percentage must be more than 50 percent in order for a provider to meet this measure.

• Exclusion: Any eligible hospital or CAH that is located in a county that does not have 50 percent or more of its housing units with 4Mbps broadband availability according to the latest information available from the FCC on the first day of the EHR reporting period.

Patient-Specific Education: The eligible hospital or CAH must use clinically relevant information from CEHRT to identify patient-specific educational resources and provide electronic access to those materials to more than 10 percent of unique patients discharged from the eligible hospital or CAH inpatient or emergency department (POS 21 or 23) during the EHR reporting period.

• Denominator: The number of unique patients discharged from an eligible hospital or CAH inpatient or emergency department (POS 21 or 23) during the EHR reporting period.

• Numerator: The number of patients in the denominator who were provided electronic access to patient-specific educational resources using clinically relevant information identified from CEHRT during the EHR reporting period.

• Threshold: The resulting percentage must be more than 10 percent in order for a provider to meet this measure.

• Exclusions: Any eligible hospital or CAH will be excluded from the measure if it is located in a county that does not have 50 percent or more of their housing units with 4Mbps broadband availability according to the latest information available from the FCC at the start of the EHR reporting period.

(2) Objective: Coordination of Care Through Patient Engagement (42 CFR 495.24(c)(6))

Objective: Use CEHRT to engage with patients or their authorized representatives about the patient's care.

As finalized in the 2015 EHR Incentive Programs Final Rule (80 FR 62861), we maintain that providers must attest to the numerator and denominator for all three measures, but would only be required to successfully meet the threshold for two of the three measures to meet the Coordination of Care through Patient Engagement Objective.

We invited public comment on our proposals.

Comment: One commenter stated it is premature to include measure 3 (Patient Generated Health Data measure) as a requirement which requires provider use of certified EHR functionality that supports receiving patient-generated data or data from nonclinical settings and recommended that CMS either remove this measure or reduce the threshold to at least one patient.

Response: We are not removing or reducing the threshold for this measure. We note that, for the Coordination of Care through Patient Engagement objective, providers must attest to the numerators and denominators for all three measures, but must only meet the thresholds for two of three measures, which provides flexibility in meeting the objective. We also refer readers to the 2015 EHR Incentive Programs Final Rule in which we state the types of data that will count in the numerator are broad, which we believe will assist providers in meeting the threshold of greater than 5 percent.

View, Download or Transmit (VDT): During the EHR reporting period, at least one unique patient (or their authorized representatives) discharged from the eligible hospital or CAH inpatient or emergency department (POS 21 or 23) actively engages with the electronic health record made accessible by the provider and engages in one of the following: (1) View, download or transmit to a third party their health information; or (2) access their health information through the use of an API that can be used by applications chosen by the patient and configured to the API in the provider's CEHRT; or (3) a combination of (1) and (2).

- Denominator: The number of unique patients discharged from an eligible hospital or CAH inpatient or emergency department (POS 21 or 23) during the EHR reporting period.
- Numerator: The number of unique patients (or their authorized representatives) in the denominator who have viewed online, downloaded, or transmitted to a third party the patient's health information during the EHR reporting period and the number of unique patients (or their authorized representatives) in the denominator who have accessed their health information through the use of an API during the EHR reporting period.
- Threshold: The numerator must be at least one patient in order for an eligible hospital or CAH to meet this measure.
- Exclusion: Any eligible hospital or CAH will be excluded from the measure if it is located in a county that does not have 50 percent or more of their housing units with 4Mbps broadband availability according to the latest information available from the FCC at the start of the EHR reporting period.
- Proposed Modification to the View, Download or Transmit (VDT) Threshold

As discussed above, under the Modified Stage 2 Objectives and Measures, we proposed to reduce the threshold of the View, Download or Transmit (VDT) measure for eligible hospitals and CAHs attesting under the Medicare EHR Incentive Program from more than 5 percent to at least one patient. We proposed to reduce the threshold for Stage 3 because we had heard from stakeholders including hospitals and hospital associations that they have faced significant challenges in implementing the objectives and measures that require patient action. These challenges included, but are not limited to, patients who have limited knowledge of, proficiency with and access to information technology as well as patients declining to access the portals provided by the eligible hospital or CAH to view, download, and transmit their health information via this platform.

We invited public comment on our proposal.

Comment: Several commenters supported the reduction of the threshold to at least one patient because it provides eligible hospitals and CAHs with greater flexibility.

Response: We thank commenters for their support. The reduction of this threshold takes into consideration the challenges voiced by providers on ''patient action'' including ''opting out,'' limitation of knowledge, and limitation of access. We believe the reduction will allow additional time for providers to teach patients the importance of accessing their health information while increasing participation.

Comment: A few commenters disagreed with CMS' proposal to retain the Stage 3 requirements which included use of APIs to connect any app of the patient's choice to the EHR in support of patient engagement and coordination of care through patient engagement objectives and believed the use of APIs was premature. The commenters requested that CMS make the API an option or not require it as part of the measure.

Response: We proposed to reduce the threshold for the VDT measure under the Coordination of Care Through Patient Engagement objective and the Provide Patient Access measure under the Patient Electronic Access to Health Information objective in response to concerns voiced by stakeholders and specific to concerns voiced about implementation of APIs in Stage 3 and difficulty in implementing objectives and measures that require patient action. We continue to believe that patient access to their electronic health information is a high priority for the EHR Incentive Programs and enabling an API will generate innovation and allow patients to access information in a manner that best suits their needs. We also note that for the Coordination of Care through Patient Engagement Objective (which includes the VDT measure and Patient Generated Health Data measure), providers must attest to the numerators and denominators of all three measures, but must only meet the thresholds for two of three measures, providing flexibility. We are not making changes to the current requirement of providing API functionality as part of the measure. However, due to the concerns voiced by stakeholders on the implementation of this technology, we are extending the 90-day EHR reporting period to include 2017 to allow additional time to test and implement this Stage 3 requirement. We address the extension of a 90-day EHR reporting period for 2017 in further detail in section XVIII.D.1. of this final rule with comment period.

Secure Messaging: For more than 5 percent of all unique patients discharged from the eligible hospital or CAH inpatient or emergency department (POS 21 or 23) during the EHR reporting period, a secure message was sent using the electronic messaging function of CEHRT to the patient (or the patient-authorized representative), or in response to a secure message sent by the patient (or the patient-authorized representative).

- Denominator: The number of unique patients discharged from an eligible hospital or CAH inpatient or emergency department (POS 21 or 23) during the EHR reporting period.
- Numerator: The number of patients in the denominator for whom a secure electronic message is sent to the patient

(or patient-authorized representative) or in response to a secure message sent by the patient (or patient-authorized representative), during the EHR reporting period.

• Threshold: The resulting percentage must be more than 5 percent in order for an eligible hospital or CAH to meet this measure.

• Exclusion: Any eligible hospital or CAH will be excluded from the measure if it is located in a county that does not have 50 percent or more of their housing units with 4Mbps broadband availability according to the latest information available from the FCC at the start of the EHR reporting period.

• Proposed Modification to the Secure Messaging Threshold for Eligible Hospitals and CAHs Attesting Under the Medicare EHR Incentive Program

We proposed to reduce the threshold of the Secure Messaging measure for eligible hospitals and CAHs attesting under the Medicare EHR Incentive Program from more than 25 percent to more than 5 percent.

We proposed to reduce the threshold because we had heard from stakeholders, including hospitals and hospital associations, that for patients who are in the hospital for an isolated incident the hospital may not have significant reason for a follow up secure message. In addition, we had heard concerns from these same stakeholders that these same patients may decline to access the messages received through this platform. They have expressed concern over not being able to meet this threshold as a result of their patients' limited knowledge of, proficiency with, and access to information technology.

We invited public comment on our proposal.

Comment: Several commenters supported the reduction of the threshold to more than 5 percent because it would provide greater flexibility and agree that it would take more time for patients to become more willing to use secure messaging.

Response: We thank commenters for their support. As we stated in the proposed rule (81 FR 45750), we believe that, with time, patients will become more willing to use secure messaging as a means to communicate and eligible hospitals and CAHs will be able to positively influence their patients in their use.

Comment: A few commenters expressed concerns with the limitations of existing vendor tools and systems used in secure messaging, as well as patient capabilities to comply with the requirements of secure messaging including patient technology literacy which could result in a patient not receiving critical care. A few commenters requested that CMS eliminate this measure for hospitals as the expectation for the hospital to follow up with patients is inefficient and an administrative burden.

Response: We acknowledge the concerns expressed by commenters on being able to meet the threshold. We proposed to reduce the threshold to more than 5 percent which we believe is attainable and allows providers additional time to educate patients on the benefits of secure messaging as a form of healthcare provider to patient communication. We also believe that EHR technology will continue to evolve and produce innovative functionalities to benefit providers and patients alike.

We decline to eliminate this measure for hospitals because we believe there is value in communication between members of the care team and a patient post discharge. This provides an opportunity to enhance coordination of care, transitions of care between providers, and improve health outcomes.

After consideration of the public comments we received, we are finalizing the reduction to the thresholds. Specifically, for Stage 3 in 2017 and 2018, we are finalizing the threshold for the View, Download or Transmit (VDT) measure as at least one patient and the threshold for the Secure Messaging Measure as more than 5 percent for eligible hospitals and CAHs attesting to CMS, including dual-eligible hospitals that are attesting to CMS for both the Medicare and Medicaid EHR Incentive Programs. These reduced thresholds do not apply to eligible hospitals and CAHs attesting to a State for the Medicaid EHR Incentive Program.

The objective and measures are as follows:

Objective: Coordination of Care Through Patient Engagement (42 CFR 495.24(c)(6))

Objective: Use CEHRT to engage with patients or their authorized representatives about the patient's care.

Providers must attest to the numerator and denominator for all three measures, but are only required to successfully meet the threshold for two of the three measures to meet the Coordination of Care through Patient Engagement Objective.

View, Download or Transmit (VDT): During the EHR reporting period, at least one unique patient (or their authorized representatives) discharged from the eligible hospital or CAH inpatient or emergency department (POS 21 or 23) actively engages with the electronic health record made accessible by the provider and engages in one of the following: (1) View, download or transmit to a third party their health information; or (2) access their health information through the use of an API that can be used by applications chosen by the patient and configured to the API in the provider's CEHRT; or (3) a combination of (1) and (2).

• Denominator: The number of unique patients discharged from an eligible hospital or CAH inpatient or emergency department (POS 21 or 23) during the EHR reporting period.

• Numerator: The number of unique patients (or their authorized representatives) in the denominator who have viewed online, downloaded, or transmitted to a third party the patient's health information during the EHR reporting period and the number of unique patients (or their authorized representatives) in the denominator who have accessed their health information through the use of an API during the EHR reporting period.

• Threshold: The numerator must be at least one patient in order for an eligible hospital or CAH to meet this measure.

• Exclusion: Any eligible hospital or CAH will be excluded from the measure if it is located in a county that does not have 50 percent or more of their housing units with 4Mbps broadband availability according to the latest information available from the FCC at the start of the EHR reporting period.

Secure Messaging: For more than 5 percent of all unique patients discharged from the eligible hospital or CAH inpatient or emergency department (POS 21 or 23) during the EHR reporting period, a secure message was sent using the electronic messaging function of CEHRT to the patient (or the patient-authorized representative), or in response to a secure message sent by the patient (or the patient-authorized representative).

• Denominator: The number of unique patients discharged from an eligible hospital or CAH inpatient or emergency department (POS 21 or 23) during the EHR reporting period.

• Numerator: The number of patients in the denominator for whom a secure electronic message is sent to the patient (or patient-authorized representative) or in response to a secure message sent by the patient (or patient-authorized representative), during the EHR reporting period.

• Threshold: The resulting percentage must be more than 5 percent in order for an eligible hospital or CAH to meet this measure.

• Exclusion: Any eligible hospital or CAH will be excluded from the measure if it is located in a county that does not have 50 percent or more of their housing units with 4Mbps broadband availability according to the latest information available from the FCC at the start of the EHR reporting period.

(3) Objective: Health Information Exchange (HIE) (42 CFR 495.24(c)(7))

Objective: The eligible hospital or CAH provides a summary of care record when transitioning or referring their patient to another setting of care, receives or retrieves a summary of care record upon the receipt of a transition or referral or upon the first patient encounter with a new patient, and incorporates summary of care information from other providers into their EHR using the functions of CEHRT.

As finalized in the 2015 EHR Incentive Programs Final Rule (80 FR 62861), we maintain that providers must attest to the numerator and denominator for all three measures, but are only required to successfully meet the threshold for two of the three measures to meet the Health Information Exchange Objective.

Comment: Many commenters supported the exchange of patient data to ensure better coordination of care between providers.

Response: We thank the commenters for their support. We agree that technology and access will continue to increase over time, which we believe will lead to expansion in the exchange of patient health information between health care providers.

Comment: A few commenters noted that the threshold reduction for each measure is not sufficient to address core concerns which are outside the control of hospitals such as functionality, data blocking and interoperability issues, as adoption of health IT is not universal among all care providers.

Response: We acknowledged the concerns in the proposed rule and believe the reduction in threshold is reasonable. We are encouraged by the continued advancement in health information exchange, as well as feedback by various stakeholders providing that the majority of hospitals are involved in some form of health information exchange. In May 2016, ONC published a report noting that the percentage of hospitals engaging in health information exchange through electronic means has increased from 50 percent in 2011 to over 80 percent in 2015 with more than 85 percent of hospitals sending patient health information electronically in CY 2015.[247] However, the report also notes that one primary barrier to increasing health information exchange identified by hospitals is a lack of trading partners that have adopted and implemented certified health IT systems. To support flexibility in this transition, we note that hospitals exchanging health information may leverage a wide range of exchange methods to accommodate the range of health IT adoption in the industry. We further note that CMS and ONC continue to support the expansion of health information exchange in the industry and are in alignment with other CMS programs, to continue to increase adoption among a wider range of healthcare providers. In addition, we refer readers to the new EHR contracting guide on the ONC Web site which is a resource that will help providers address data blocking and other challenges as they continue to adopt and leverage health IT to improve the way they deliver care.[248]

Finally, we reiterate the fact that providers continue to have the option to apply for a hardship exception for circumstances related to health IT issues that are outside of a provider's control and impact their ability to demonstrate meaningful use.

Send a Summary of Care: For more than 10 percent of transitions of care and referrals, the eligible hospital or CAH that transitions or refers their patient to another setting of care or provider of care: (1) Creates a summary of care record using CEHRT; and (2) electronically exchanges the summary of care record.

• Denominator: Number of transitions of care and referrals during the EHR reporting period for which the eligible hospital or CAH inpatient or emergency department (POS 21 or 23) was the transferring or referring provider.

• Numerator: The number of transitions of care and referrals in the denominator where a summary of care record was created using certified EHR technology and exchanged electronically.

• Threshold: The percentage must be more than 10 percent in order for an eligible hospital or CAH to meet this measure.

• Exclusion: Any eligible hospital or CAH will be excluded from the measure if it is located in a county that does not have 50 percent or more of their housing units with 4Mbps broadband availability according to the latest information available from the FCC at the start of the EHR reporting period.

• Proposed Modification to the Send a Summary of Care Measure for Eligible Hospitals and CAHs Attesting Under the Medicare EHR Incentive Program

We proposed to reduce the threshold for the Send a Summary of Care measure for eligible hospitals and CAHs attesting under the Medicare EHR Incentive Program from more than 50 percent to more than 10 percent.

Hospital and hospital association feedback on the 2015 EHR Incentive Programs Final Rule, as well as recent reports and surveys of hospital participants showed that there were still challenges to achieving wide scale interoperable health information exchange.[249] Specifically, more than 50 percent of hospital stakeholders identified a lack of health IT adoption to support electronic exchange among trading partners as a key barrier, especially for provider types and settings of care where wide spread adoption may be slower. Stakeholders have emphasized that while the majority of hospitals are now engaging in health IT supported health information exchange, achieving high performance will require further saturation of these health IT supports throughout the industry.

We invited public comment on our proposal.

Comment: Several commenters supported the reduction of the threshold to greater than 10 percent.

Response: We thank the commenters for their support. We continue to believe that technology and access will continue to increase as more healthcare providers implement EHR systems and there is greater focus on interoperability. In addition, we agree that the creation and electronic exchange of a summary of care is beneficial to delivery system reform and facilitating coordination of care.

Comment: A few commenters stated hospitals should not be penalized for interacting with other healthcare providers who are still in the process of implementing health IT.

A few commenters stated that primary care physicians are at a disadvantage in attempting to meet the Health Information Exchange requirements. The commenters believed that it is difficult to find other providers with which they could successfully exchange

[247] ONC Data Brief 36: May 2016 ''Interoperability among U.S. Non-federal Acute Care Hospitals in 2015: *http://dashboard.healthit.gov/evaluations/data-briefs/non-federal-acute-care-hospital-interoperability-2015.php.*

[248] EHR Contracts Untangled: Selecting Wisely, Negotiating Terms, and Understanding the Fine Print—*https://www.healthit.gov/sites/default/files/EHR_Contracts_Untangled.pdf.*

[249] ONC Data Brief: No. 36; May 2016. Available at: *https://www.healthit.gov/sites/default/files/briefs/onc_data_brief_36_interoperability.pdf.*

a patient's summary of care and requested that CMS consider excluding this objective until widespread adoption could be achieved.

Other commenters stated there is room for both CMS and healthcare providers to improve data sharing as a way to improve patient care and safety.

Response: We understand the difficulties that providers have in health information exchange requirements. However, the majority of hospitals are engaging in health information exchange as indicated in the ONC data brief (*https://www.healthit.gov/sites/default/files/briefs/onc_data_brief_36_interoperability.pdf*). We believe advancement in health information exchange will increase trading partners and allow for greater ability to meet the thresholds. We decline to remove this measure based on the comment that there is a lack of trading partners. We have provided flexibility in that providers must attest to the numerator and denominator for all three measures, but are only required to successfully meet the threshold for two of the three measures to meet the Health Information Exchange objective.

We agree that data sharing will continue to progress as interoperability and health information exchanges improve in number and innovation.

Request/Accept Summary of Care: For more than 10 percent of transitions or referrals received and patient encounters in which the provider has never before encountered the patient, the eligible hospital or CAH incorporates into the patient's EHR an electronic summary of care document.

- Denominator: Number of patient encounters during the EHR reporting period for which an eligible hospital or CAH was the receiving party of a transition or referral or has never before encountered the patient and for which an electronic summary of care record is available.
- Numerator: Number of patient encounters in the denominator where an electronic summary of care record received is incorporated by the provider into the certified EHR technology.
- Threshold: The percentage must be more than 10 percent in order for an eligible hospital or CAH to meet this measure.
- Exclusions:
  - Any eligible hospital or CAH for whom the total of transitions or referrals received and patient encounters in which the provider has never before encountered the patient, is fewer than 100 during the EHR reporting period is excluded from this measure.
  - Any eligible hospital or CAH will be excluded from the measure if it is located in a county that does not have 50 percent or more of their housing units with 4Mbps broadband availability according to the latest information available from the FCC at the start of the EHR reporting period.
- Proposed Modification to the Request/Accept Summary of Care Threshold for Eligible Hospitals and CAHs Attesting Under the Medicare EHR Incentive Program

We proposed to reduce the threshold for eligible hospitals and CAHs attesting under the Medicare EHR Incentive Program for the Request/Accept Summary of Care measure from more than 40 percent to more than 10 percent. Hospital and hospital association feedback on the 2015 EHR Incentive Programs Final Rule, as well as recent reports and surveys of hospital participants showed that there were still challenges to achieving wide scale interoperable health information exchange.[250] Specifically, more than 50 percent of hospital stakeholders identified a lack of health IT adoption to support electronic exchange among trading partners as a key barrier, especially for provider types and settings of care where wide spread adoption may be slower. Stakeholders have emphasized that while the majority of hospitals are now engaging in health IT supported health information exchange, achieving high performance will require further saturation of these health IT supports throughout the industry.

We invited public comment on our proposal.

Comment: Several commenters supported the reduction of the threshold to greater than 10 percent.

Response: We thank the commenters for their support. We believe the reduction of this threshold will allow additional time for focus on interoperability and an increase in trading partners. We are encouraged by the state of interoperable exchange activity among U.S. non-Federal acute care hospitals found in ONC's data brief and believe this trend will continue.[251]

Comment: A few commenters recommended lowering this threshold from 10 percent to at least one patient due to significant technical problems with receiving an electronic summary-of-care document.

Response: A review of the Stage 2 eligible hospital summary of care performance data through March 2015 found that eligible hospitals met the requirements at the 1st (19 percent) 2nd (29 percent) and 3rd (48 percent) quartile at a threshold of 10 percent for measure 2 under the Stage 2 Summary of Care objective (*https://www.cms.gov/Regulations-and-Guidance/Legislation/EHRIncentivePrograms/Downloads/AttestationPerformanceData_Feb2015.pdf*) (page 25)). We believe the data support the proposed threshold reduction to more than 10 percent and indicate that providers have been successful with meeting this threshold.

Clinical Information Reconciliation: For more than 50 percent of transitions or referrals received and patient encounters in which the provider has never before encountered the patient, the eligible hospital or CAH performs a clinical information reconciliation. The provider must implement clinical information reconciliation for the following three clinical information sets: (1) Medication. Review of the patient's medication, including the name, dosage, frequency, and route of each medication; (2) Medication allergy. Review of the patient's known allergic medications; and (3) Current Problem list. Review of the patient's current and active diagnoses.

- Denominator: Number of transitions of care or referrals during the EHR reporting period for which the eligible hospital or CAH inpatient or emergency department (POS 21 or 23) was the recipient of the transition or referral or has never before encountered the patient.
- Numerator: The number of transitions of care or referrals in the denominator where the following three clinical information reconciliations were performed: Medication list; medication allergy list; and current problem list.
- Threshold: The resulting percentage must be more than 50 percent in order for an eligible hospital or CAH to meet this measure.
- Exclusions: Any eligible hospital or CAH for whom the total of transitions or referrals received and patient encounters in which the provider has never before encountered the patient, is fewer than 100 during the EHR reporting period is excluded from this measure.
- Proposed Modification to the Clinical Information Reconciliation Threshold for Eligible Hospitals and CAHs Attesting Under the Medicare EHR Incentive Program.

We proposed to reduce the threshold for eligible hospitals and CAHs attesting under the Medicare EHR Incentive Program for the Clinical Information Reconciliation measure from more than 80 percent to more than 50 percent. As

[250] Ibid.

[251] ONC Data Brief: No. 36 ▪ May 2016. Available at: *https://www.healthit.gov/sites/default/files/briefs/onc_data_brief_36_interoperability.pdf.*

mentioned in both the Send a Summary of Care measure and the Request/Accept Summary of Care measure, there are challenges to achieving wide scale interoperable health information exchange. Specifically, more than 50 percent of hospital stakeholders identified a lack of health IT adoption to support electronic exchange among trading partners as a key barrier, especially for provider types and settings of care where wide spread adoption may be slower. We will continue to review adoption and performance and consider increasing the threshold in future rulemaking.

We invited public comment on our proposal.

Comment: A few commenters supported the reduction of the threshold to greater than 50 percent.

Response: We thank commenters for their support and note that our intent in maintaining a 50-percent threshold for this measure is to allow providers to continue to improve on reconciliation workflows both involving HIE and through other methods as well as to provide flexibility, as providers continue to move toward reconciliation of a wider range of information beyond medications alone.

Comment: A few commenters stated that the proposed 50-percent threshold is not reasonably achievable as the industry has no experience implementing technology capable of clinical information reconciliation.

A few commenters suggested that the threshold for pulling the record and reconciling the information should be the same. The commenters stated that 10 percent is reasonable, given that this is the initial year of this objective and that a minority of patients are likely to have this information electronically available.

Response: We note that this measure builds on the existing Medication Reconciliation Objective for the EHR Incentive Programs in 2015 through 2017 (we refer readers to section II.B.2.a. of the preamble to the 2015 EHR Incentive Programs Final Rule (80 FR 62809 through 62811)). We further stated in the 2015 EHR Incentive Programs Final Rule that this process may include electronic and manual reconciliation through use of certified EHR technology and discussion with the patient. In addition, we stated the process of reconciliation may consist of simply verifying that fact or reviewing a record received on referral and determining that such information is merely duplicative of existing information in the patient record (80 FR 62861).

A review of the Stage 2 eligible hospital summary of care performance data through March 2015 found that eligible hospitals met the requirements for Medication Reconciliation at the 1st (81 percent) 2nd (91 percent) and 3rd (97 percent) quartile at a threshold of 50 percent (*https://www.cms.gov/Regulations-and-Guidance/Legislation/EHRIncentivePrograms/Downloads/AttestationPerformanceData_Feb2015.pdf* (page 23)). We believe the data support the proposed threshold reduction to 50 percent and indicate providers have been successful with meeting this threshold. We believe the success of the medication reconciliation measure, shown in our data, will transcend to the Clinical Information Reconciliation measure because it builds on the medication reconciliation measure and allows for the provider's clinical judgment on what information is included in the process.

We stated in the 2015 EHR Incentive Programs Final Rule (80 FR 62861) that we believe many providers may conduct some form of reconciliation in conjunction with measure 2, or that providers in certain specialties may elect to conduct reconciliation of clinical information even beyond our requirement. We do not believe that the thresholds for measures 2 and 3 should both be at greater than 10 percent, and reiterate that while providers must attest to the numerator and denominator of all three measures, they are only required to successfully meet the threshold for two of three measures, providing additional flexibility.

After consideration of the public comments we received, we are finalizing the reduction to the thresholds. Specifically, for Stage 3 in 2017 and 2018, we are finalizing the Send a Summary of Care measure threshold as more than 10 percent, Request/Accept Summary of Care measure threshold as more than 10 percent, and Clinical Information Reconciliation measure threshold as more than 50 percent for eligible hospitals and CAHs attesting to CMS, including dual-eligible hospitals that are attesting to CMS for both the Medicare and Medicaid EHR Incentive Programs. These reduced thresholds do not apply to eligible hospitals and CAHs attesting to a State for the Medicaid EHR Incentive Program.

The objective and measures are as follows:

Objective: Health Information Exchange (HIE) (42 CFR 495.24(c)(7))

Objective: The eligible hospital or CAH provides a summary of care record when transitioning or referring their patient to another setting of care, receives or retrieves a summary of care record upon the receipt of a transition or referral or upon the first patient encounter with a new patient, and incorporates summary of care information from other providers into their EHR using the functions of CEHRT.

Send a Summary of Care: For more than 10 percent of transitions of care and referrals, the eligible hospital or CAH that transitions or refers their patient to another setting of care or provider of care: (1) Creates a summary of care record using CEHRT; and (2) electronically exchanges the summary of care record.

- Denominator: Number of transitions of care and referrals during the EHR reporting period for which the eligible hospital or CAH inpatient or emergency department (POS 21 or 23) was the transferring or referring provider.
- Numerator: The number of transitions of care and referrals in the denominator where a summary of care record was created using certified EHR technology and exchanged electronically.
- Threshold: The percentage must be more than 10 percent in order for an eligible hospital or CAH to meet this measure.
- Exclusion: Any eligible hospital or CAH will be excluded from the measure if it is located in a county that does not have 50 percent or more of their housing units with 4Mbps broadband availability according to the latest information available from the FCC at the start of the EHR reporting period.

Request/Accept Summary of Care: For more than 10 percent of transitions or referrals received and patient encounters in which the provider has never before encountered the patient, the eligible hospital or CAH incorporates into the patient's EHR an electronic summary of care document.

- Denominator: Number of patient encounters during the EHR reporting period for which an eligible hospital or CAH was the receiving party of a transition or referral or has never before encountered the patient and for which an electronic summary of care record is available.
- Numerator: Number of patient encounters in the denominator where an electronic summary of care record received is incorporated by the provider into the certified EHR technology.
- Threshold: The percentage must be more than 10 percent in order for an eligible hospital or CAH to meet this measure.
- Exclusions:

•• Any eligible hospital or CAH for whom the total of transitions or referrals received and patient encounters in which the provider has never before encountered the patient, is fewer than 100 during the EHR reporting period is excluded from this measure.

•• Any eligible hospital or CAH will be excluded from the measure if it is located in a county that does not have 50 percent or more of their housing units with 4Mbps broadband availability according to the latest information available from the FCC at the start of the EHR reporting period.

Clinical Information Reconciliation: For more than 50 percent of transitions or referrals received and patient encounters in which the provider has never before encountered the patient, the eligible hospital or CAH performs a clinical information reconciliation. The provider must implement clinical information reconciliation for the following three clinical information sets: (1) Medication. Review of the patient's medication, including the name, dosage, frequency, and route of each medication; (2) Medication allergy. Review of the patient's known allergic medications; and (3) Current Problem list. Review of the patient's current and active diagnoses.

• Denominator: Number of transitions of care or referrals during the EHR reporting period for which the eligible hospital or CAH inpatient or emergency department (POS 21 or 23) was the recipient of the transition or referral or has never before encountered the patient.

• Numerator: The number of transitions of care or referrals in the denominator where the following three clinical information reconciliations were performed: Medication list; medication allergy list; and current problem list.

• Threshold: The resulting percentage must be more than 50 percent in order for an eligible hospital or CAH to meet this measure.

• Exclusions: Any eligible hospital or CAH for whom the total of transitions or referrals received and patient encounters in which the provider has never before encountered the patient, is fewer than 100 during the EHR reporting period is excluded from this measure.

(4) Objective: Public Health and Clinical Data Registry Reporting (42 CFR 495.24(c)(8))

Objective: The eligible hospital or CAH is in active engagement with a public health agency (PHA) or clinical data registry (CDR) to submit electronic public health data in a meaningful way using CEHRT, except where prohibited, and in accordance with applicable law and practice.

Immunization Registry Reporting (42 CFR 495.24(c)(8)(A))

Syndromic Surveillance Reporting (42 CFR 495.24(c)(8)(B))

Electronic Case Reporting (42 CFR 495.24(c)(8)(C))

Public Health Registry Reporting (42 CFR 495.24(c)(8)(D))

Clinical Data Registry Reporting (42 CFR 495.24(c)(8)(E))

Electronic Reportable Laboratory Result Reporting (42 CFR 495.24(c)(8)(F))

• Proposed Modification to the Public Health and Clinical Data Registry Reporting Requirements for Eligible Hospitals and CAHs Attesting Under the Medicare EHR Incentive Program.

We proposed to reduce the reporting requirement for eligible hospitals and CAHs attesting to CMS for Public Health and Clinical Data Registry Reporting, to the Modified Stage 2 requirement of any combination of three measures from any combination of six measures in alignment with Modified Stage 2 requirements (80 FR 62870). We received written correspondence from hospitals and hospital associations indicating that it is often difficult to find registries that are able to accept data that will allow them to successfully attest. Hospitals and hospital associations had indicated that it is administratively burdensome to seek out registries in their jurisdiction, contact the registries to determine if they are accepting data in the standards required, then determine if they meet the exclusion criteria if they are unable to send data to a registry. In addition, we had received written correspondence from hospitals indicating that in some instances additional technologies were required to transmit data, which prevented them from doing so.

We invited public comment on our proposal.

Comment: Several providers supported the reduction of Public Health and Clinical Data Registry Reporting requirements for Stage 3 because they believed there is a lack of entities ready to accept the electronic reporting data.

Response: We thank the commenters for their support. As we discussed in the proposed rule (81 FR 45751 through 45752), we have received written communication regarding the difficulty in finding registries that are able to accept data that will allow hospitals to successfully attest. We believe the number of available registries will increase over time. In addition, we are in the process of developing a centralized repository for public health agency and clinical data registry reporting, which should be available early in 2017. The repository will assist eligible professionals, eligible hospitals and CAHs in finding entities that accept electronic public health data. We further note that the lack of an available registry capable of receiving electronic data remains an acceptable reason for exclusion from a given measure under this objective.

Comment: A few commenters disagreed with reducing the reporting requirement for eligible hospitals and CAHs to three measures for the Public Health and Clinical Data Registry Reporting objective. A few commenters noted that providers still struggle to identify the certified clinical registries to which they must submit measures and suggested that CMS maintain a list of clinical and public health registries that can support the active engagement requirement.

Response: We proposed to reduce the threshold for the Public Health and Clinical Data Registry Reporting objective based on concerns voiced by stakeholders who were having difficulty finding registries to report to. We believe a reduction in the reporting requirement will relieve the administrative burden providers indicated they were experiencing with this objective. We note that, for the 2015 and 2016 EHR reporting periods, we implemented alternate exclusions based on the issues associated with the specialized registry measure including acquisition of additional technologies they did not already have. We also note that providers that wish to attest to additional measures may do so.

We are developing a centralized repository for public health agency and clinical data registry reporting to help EPs, eligible hospitals, and CAHs find entities that accept electronic public health data as discussed in the 2015 EHR Incentive Programs Final Rule (80 FR 62863).

After consideration of the public comments we received, we are finalizing the reduction of the reporting requirements for Stage 3 Public Health and Clinical Data Registry Reporting to any combination of three measures out of six total measures for eligible hospitals and CAHs attesting to CMS, including dual-eligible hospitals that are attesting to CMS for both the Medicare and Medicaid EHR Incentive Programs. This reduction does not apply to eligible hospitals and CAHs attesting to a State for the Medicaid EHR Incentive Program.

STAGE 3 OBJECTIVES AND MEASURES FOR 2017 AND 2018 FOR ELIGIBLE HOSPITALS AND CAHS ATTESTING TO CMS

Objective	Previous measure name/reference	Measure name	Threshold requirement
Protect Patient Health Information	Measure	Security Risk Analysis	Yes/No attestation.
Electronic Prescribing	Eligible hospital/CAH Measure	e-Prescribing	>25%
CDS (Clinical Decision Support)*	Measure 1	Clinical Decision Support Interventions.	Five CDS.
	Measure 2	Drug Interaction and Drug-Allergy Checks.	Yes/No.
CPOE (Computerized Provider Order Entry*.	Measure 1	Medication Orders	>60%
	Measure 2	Laboratory Orders	>60%
	Measure 3	Diagnostic Imaging Orders	>60%
Patient Electronic Access to Health Information.	Measure 1	Provide Patient Access	>50%
	Measure 2	Patient-Specific Education**	>10%
Coordination of Care through Patient Engagement.	Measure 1	View, Download or Transmit (VDT)**.	At least 1 patient.
	Measure 2	Secure Messaging	>5%
	Measure 3	Patient Generated Health Data	>5%
Health Information Exchange	Measure 1	Send a Summary of Care***	>10%
	Measure 2	Request/Accept Summary of Care***.	>10%
	Measure 3	Clinical Information Reconciliation**.	>50%
Public Health and Clinical Data Registry Reporting.	Immunization Registry Reporting Syndromic Surveillance Reporting Case Reporting Public Health Registry Reporting Clinical Data Registry Reporting Electronic Reportable Laboratory Result Reporting.	Immunization Registry Reporting Syndromic Surveillance Reporting Electronic Case Reporting Public Health Registry Reporting Clinical Data Registry Reporting Electronic Reportable Laboratory Result Reporting.	Report to 3 Registries or claim exclusions.

* We note that we are finalizing the removal of CDS and CPOE for eligible hospitals and CAHs attesting to CMS section XVIII.C.1. of this final rule with comment period. These objectives are included in the table to demonstrate what their measures and thresholds would have been if we were not finalizing our proposal to remove them.

** We note that, in the proposed rule (81 FR 45752), we referred to this measure as the ''View Download Transmit Measure.''

*** We note that, in the proposed rule (81 FR 45752), we referred to this measure as the ''Patient Care Record Exchange Measure.''

** We note that, in the proposed rule (81 FR 45752), we referred to this measure as the ''Request/Accept Patient Care Record Measure.''

We sought public comments on how measures of meaningful use under the EHR Incentive Program can be made more stringent in future years, consistent with the requirements of section 1886(n)(3)(A) of the Act. In addition, we sought public comments on new and more stringent measures for future years of the EHR Incentive Program and will consider these comments for future enhancements of the EHR Incentive Program in future rulemaking. We intend to reevaluate the objectives, measures, and other program requirements for Stage 3 in 2019 and subsequent years. We noted that our proposed revisions to the regulation text at § 495.24 would only include objectives and measures for eligible hospitals and CAHs for Stage 3 in 2017 and 2018. We requested comments on any changes that hospitals and other stakeholders believe should be made to the objectives and measures for Stage 3 in 2019 and subsequent years.

Comment: One commenter disagreed with CMS making further changes to meaningful use objectives and measures in 2019 and subsequent years as this conflicted with the 2015 EHR Incentive Programs Final Rule that indicated meaningful use Stage 3 requirements would continue unchanged in 2018, 2019, and through future years (80 FR 62776) and that Stage 3 is intended to be the last stage of the program (80 FR 62766). The commenter indicated confusion on whether an additional stage was planned or if the intention was to make changes without the distinction of a separate stage and disagreed with same-stage changes to requirements. In addition, the commenter stated if CMS intends to make changes in 2019, vendors and healthcare organizations need sufficient advance notice to plan and prepare for those changes. Based on the timeline of previous rulemaking for Stage 2 and Stage 3, the commenter believed CMS would need to issue a proposed rule by March 2017 to allow for public comments and a final rule by August 2017 so there is enough time to implement changes before the start of the 2019 EHR reporting period.

Response: We previously stated that there would be three stages of meaningful use. However, we do not want to hinder advancement of health information technology and additional program revisions are likely necessary in achieving widespread adoption of CEHRT. Therefore, continual advancements, changes and evolution in technology and other aspects of the program such as privacy, security, and practice standards will impact the EHR Incentive Program and may spur additional rulemaking, possibly resulting in additional stages to the EHR Incentive Program.

We understand the concern regarding the timeline for any changes we might make for 2019 and intend to work with stakeholders to ensure sufficient time is provided for updates and implementation of requirements in future rulemaking.

As stated in the previous sections, in the proposed rule, we did not propose any changes to the objectives and measures for Modified Stage 2 for 2017 or Stage 3 for 2017 and 2018 for eligible hospitals and CAHs that attest to a State's Medicaid EHR Incentive Program. We considered proposing the same changes for both Medicare and Medicaid, but based upon our concerns that States would incur additional cost

and time burdens in having to update their technology and reporting systems within a short period of time, we proposed these changes only for eligible hospitals and CAHs attesting to the Medicare EHR Incentive Program. We requested comments on whether these proposed changes should also apply for eligible hospitals and CAHs attesting to a State's Medicaid EHR Incentive Program. Specifically, we requested comments on whether the proposed changes to eliminate the CPOE and CDS objectives and measures and reduce a subset of the measure thresholds for Modified Stage 2 in 2017 and Stage 3 in 2017 and 2018 should also apply for eligible hospitals and CAHs that seek to qualify for an incentive payment for meaningful use under Medicaid. We requested comments from State Medicaid agencies concerning our assumptions about the additional cost and time burdens they would face in accommodating these changes, and whether those burdens would exist for both 2017 and 2018.

Comment: The majority of commenters requested that the proposed changes to the objectives and measures, including removal of the CDS and CPOE objectives beginning in 2017 and a reduction in thresholds for a subset of the remaining objectives and measures, also be applied to the Medicaid EHR Incentive Program for eligible hospitals, CAHs, and EPs. The commenters indicated that differing requirements vastly increase the burden of reporting and complexity, especially for hospitals that participate in both the Medicare and Medicaid EHR Incentive Programs. A few commenters suggested that CMS collect all data through the Medicare attestation process and pass the results to the appropriate State Medicaid program indicated by the participant or that CMS could assess its ability to intake Medicaid-only attestations and communicate them to the States because it currently does for hospitals participating in both the Medicare and Medicaid EHR Incentive Programs. This would leverage existing reporting and communication capabilities to ensure alignment across Medicare and Medicaid.

A few commenters believed that dual-eligible hospitals are required to attest to both the Medicare and Medicaid programs.

Some commenters proposed that, for objectives proposed for elimination, hospitals attesting under Medicaid should be able to attest with either 0 percent or NO as appropriate for 2017 and 2018 without penalty.

Response: We recognize the challenges associated with the proposal to require different sets of objectives and measures for hospitals participating in the Medicaid EHR Incentive Program versus the Medicare EHR Incentive Program beginning in 2017. The vast majority of commenters supported aligning the proposed changes for dual-eligible hospitals participating in both the Medicare EHR Incentive Program and the Medicaid EHR Incentive Program because doing so will eliminate the need for additional attestation and reporting requirements. Section 1903(t)(8) of the Act provides that a State and the Secretary shall seek, to the maximum extent practicable, to avoid duplicative requirements to demonstrate meaningful use of certified EHR technology under Medicaid and Medicare.

Based on this statutory directive and for the reasons identified by the commenters, under our final policy, eligible hospitals and CAHs participating in both the Medicare and Medicaid EHR Incentive Programs that attest to CMS will attest based on the revised objectives and measures that we are adopting in this final rule with comment period, including the changes to eliminate the CPOE and CDS objectives and measures and reduce a subset of the measure thresholds for Modified Stage 2 in 2017 and Stage 3 in 2017 and 2018. Dual-eligible hospitals may submit one attestation for both the Medicare and Medicaid EHR Incentive Programs to CMS and the attestation data will be shared with the appropriate State Medicaid agency to process the Medicaid incentive payment. Medicaid-only hospitals and dual-eligible hospitals that attest directly to a State for the State's Medicaid EHR Incentive Program will continue to attest based on the measures and objectives as finalized in the 2015 EHR Incentive Programs Final Rule (80 FR 62793 through 80 FR 62871).

Comment: One commenter stated that Medicare providers should have to meet the higher standards for objectives and measures in the 2015 EHR Incentive Programs Final Rule that would apply for Medicaid providers.

Response: We thank the commenter for its input. We have previously stated that the proposals were meant to reduce reporting burden and allow providers to focus more on patient care. In addition, under our final policies stated above, the changes to the objectives and measures that we are adopting in this final rule with comment period apply to dual-eligible hospitals that participate in both the Medicare and Medicaid EHR Incentive Programs that submit an attestation to CMS, in addition to Medicare-only hospitals. In addition, we requested public comments on how we could make the measures more stringent in future years. We did not receive any public comments on how to make the measures more stringent in future years.

After consideration of the public comments we received, we are finalizing that eligible hospitals and CAHs participating in both the Medicare and Medicaid EHR Incentive Programs that attest to CMS will attest based on the revised objectives and measures that we are adopting in this final rule with comment period, including the changes to eliminate the CPOE and CDS objectives and measures and reduce a subset of the measure thresholds for Modified Stage 2 in 2017 and Stage 3 in 2017 and 2018. Dual-eligible hospitals may submit one attestation for both the Medicare and Medicaid EHR Incentive Programs to CMS. Medicaid-only hospitals and dual-eligible hospitals that attest directly to a State for the State's Medicaid EHR Incentive Program will continue to attest based on the measures and objectives as finalized in the 2015 EHR Incentive Programs Final Rule (80 FR 62793 through 80 FR 62871).

D. Changes to the EHR Reporting Period in 2016 for EPs, Eligible Hospitals and CAHs

1. Definition of ''EHR Reporting Period'' and ''EHR Reporting Period for a Payment Adjustment Year''

In the CY 2017 OPPS/ASC proposed rule (81 FR 45753), we proposed to change the EHR reporting periods in 2016 for returning participants from the full CY 2016 to any continuous 90-day period within CY 2016. This would mean that all EPs, eligible hospitals and CAHs may attest to meaningful use for an EHR reporting period of any continuous 90-day period from January 1, 2016 through December 31, 2016. The applicable incentive payment year and payment adjustment years for the EHR reporting period in 2016, as well as the deadlines for attestation and other related program requirements, would remain the same as established in prior rulemaking. We proposed corresponding changes to the definition of ''EHR reporting period'' and ''EHR reporting period for a payment adjustment year'' at 42 CFR 495.4.

We invited public comment on our proposals.

Comment: Several commenters supported the 90-day EHR reporting period because they believed it would reduce the burden of reporting and meeting all the thresholds for a 12-month period, increase program flexibility, and allow clinicians to spend

more time on patient care and implement new program requirements without affecting clinician workflow. These commenters also stated that this additional time would allow health care providers to focus more time and attention on preparing for the upcoming implementation of MACRA/MIPS and train new physicians on the use of a group's EHR, including work flows and processes, and allows the extra time needed to upgrade to the 2015 Edition CEHRT.

Several commenters also requested CMS to extend the 90-day EHR reporting period for 2017 and 2018. These commenters believed that this reduction from a full calendar year reporting to a 90-day EHR reporting period will increase flexibility and prepare them for success in MPS starting in 2017. Some commenters also expressed concerns about implementing APIs and other functionalities for Stage 3 and encouraged CMS to adopt a 90-day EHR reporting period in 2017 to allow for extra time needed to upgrade to the 2015 Edition CEHERT.

Response: We agree with the commenters that the change in the EHR reporting period will reduce burden on all EPs, eligible hospitals and CAHs preparing for Stage 3, as well as for EPs who will begin participating in MIPS in 2017. We also agree with health care providers that allowing a 90-day EHR reporting period does allow clinicians to spend more time on patient care and implement new requirements without negatively affecting clinician workflow.

Comment: Several commenters urged CMS to adopt the 90-day EHR reporting period as expeditiously as possible. Some commenters further urged the rapid launch of the Web site to prepare for these attestations.

Response: We note that after this final rule with comment period is published, we will work on a rapid implementation of this policy.

Comment: Several commenters recommended that CMS permanently keep the 90-day EHR reporting period for hospitals and EPs to avoid having to make yearly changes and streamline the attestation process.

Response: We disagree that we should permanently retain a 90-day EHR reporting period for returning participants. We do understand that it can cause uncertainty when we change the EHR reporting period in rulemaking from year to year. However, considering the implementation of MIPS in 2017 for EPs, as well as Stage 3 and the 2015 Edition for all EPs, eligible hospitals and CAHs in 2018 (optional in 2017), we believe adopting a 90-day EHR reporting period in 2016 for all participants will reduce the burden of reporting for a full year and assist healthcare providers in establishing and testing their processes and workflows for the new requirements and implementation functionalities required for EHR technology certified to the 2015 Edition. We believe a full year EHR reporting period is the most effective way to ensure that all actions related to patient safety that leverage CEHRT are fully enabled for the duration of the year. This is one of the primary considerations of our continued push for a full year EHR reporting period, in addition to promoting greater alignment with other CMS quality reporting programs.

Comment: Some commenters stated that they are concerned with the proposed rule's late notice of the proposed change to the EHR reporting period in 2016 because they will have to monitor EPs and eligible hospitals for both 365-day reporting periods and 90-day reporting periods because they will not know if CMS will finalize the proposed change until the fourth quarter of 2016

Response: We thank the commenters for their views on this proposal. While we understand the concerns of these commenters, we believe that we have provided EPs, eligible hospitals, and CAHs sufficient time to report on any continuous 90-day EHR reporting period from January 1, 2016–December 31, 2016.

Comment: Several commenters welcomed having a longer EHR reporting period because it allows them opportunity to evaluate their progress and improve in subsequent months.

Response: We thank the commenters for their feedback. We note that we are establishing in this final rule with comment period an EHR reporting period of any continuous 90 days from January 1, 2016 through December 31, 2016. However, we note that health care providers are required to report on a minimum of 90 days, but may choose to report on the full calendar year in 2016.

Comment: Some commenters stated that they need more time to implement and upgrade technology in order to meet the complex Stage 3 requirements, which they stated adds to the existing challenges they face. In addition, some commenters disagreed with the proposed changes in the proposed rule because they stated they must adapt to new changes every year.

Response: We thank the commenters for their feedback. We believe that reducing the EHR reporting period from the full CY 2016 to any continuous 90-day period from January 1, 2016 through December 31, 2016, in fact, reduces challenges because it allows for the EPs, eligible hospitals and CAHs to report based on a shorter period of time.

Comment: Some commenters suggested that CMS issue guidance notifying physicians of the 90-day EHR reporting period and begin educating physicians about the change as quickly as possible.

Response: We thank the commenters for their feedback. This final rule with comment period serves as the notice to all EPs, eligible hospitals, and CAHs. We understand the need to implement the policies adopted in this rule as quickly as possible.

Comment: Some commenters were unclear if they should prepare for a 90-day or 365-day EHR reporting period in 2016.

Response: We are finalizing an EHR reporting period of any continuous 90-day period within CY 2016. Therefore, EPs, eligible hospitals, and CAHs should prepare for a 90-day EHR reporting period.

After consideration of the public comments we received, we are finalizing a change to the EHR reporting periods in 2016 and 2017 for returning participants, from the full calendar year to any continuous 90-day period within the CY. For all EPs, eligible hospitals and CAHs, the EHR reporting period in CY 2016 is any continuous 90-day period from January 1, 2016 through December 31, 2016, and the EHR reporting period in CY 2017 is any continuous 90-day period from January 1, 2017 through December 31, 2017. The applicable incentive payment year and payment adjustment years for the EHR reporting periods in 2016 and 2017, as well as the deadlines for attestation and other related program requirements, will remain the same as established in prior rulemaking. We are finalizing corresponding changes to the definitions of ''EHR reporting period'' and ''EHR reporting period for a payment adjustment year'' in the regulations under § 495.4.

2. Clinical Quality Measurement

In connection with the proposal to establish a 90-day EHR reporting period in 2016, we also proposed a 90-day reporting period for CQMs (81 FR 45753) which would have no impact on the requirements for CQM data that are electronically reported as established in prior rulemaking. In 2016, we proposed that providers may:

- Report CQM data by attestation for any continuous 90-day period during calendar year 2016 through the Medicare EHR Incentive Program registration and attestation site; or

• Electronically report CQM data in accordance with the requirements established in prior rulemaking.

We noted that, for EPs, eligible hospitals and CAHs, CQM data submitted via attestation can be submitted for a different 90-day period than the EHR reporting period for the meaningful use objectives and measures.

Comment: Several commenters agreed with a 90-day EHR reporting period because it would allow EPs, eligible hospitals, and CAHs the opportunity to implement the changes from the 2015 Final Rule for CQMs and urged CMS to finalize this change.

Response: We believe that this change will reduce provider burden and further simplify the program through alignment of the EHR reporting period and CQM reporting period for CY 2016.

We are finalizing our policy to allow a 90-day reporting period for clinical quality measures (CQMs) for all EPs, eligible hospitals, and CAHs that choose to report CQMs by attestation in 2016.

We intend to continue to allow the States to determine the form and manner of reporting CQMs for their respective State Medicaid EHR Incentive Programs subject to CMS approval.

E. Policy To Require Modified Stage 2 for New Participants in 2017

After the publication of the 2015 EHR Incentive Programs Final Rule, we determined that, due to cost and time limitation concerns related specifically to 2015 Edition CEHRT updates in the EHR Incentive Program Registration and Attestation System, it is not technically feasible for EPs, eligible hospitals, and CAHs that have not successfully demonstrated meaningful use in a prior year (new participants) to attest to the Stage 3 objectives and measures in 2017 in the EHR Incentive Program Registration and Attestation System. For this reason, in the CY 2017 OPPS/ASC proposed rule (81 FR 45753 through 45754), we proposed that any EP or eligible hospital new participant seeking to avoid the 2018 payment adjustment by attesting for an EHR reporting period in 2017 through the EHR Incentive Program Registration and Attestation system, or any CAH new participant seeking to avoid the FY 2017 payment adjustment by attesting for an EHR reporting period in 2017 through the EHR Incentive Program Registration and Attestation System, would be required to attest to the Modified Stage 2 objectives and measures. This proposal does not apply to EPs, eligible hospitals, and CAHs that have successfully demonstrated meaningful use in a prior year (returning participants) attesting for an EHR reporting period in 2017. In early 2018, these returning eligible hospitals and CAHs will be transitioned to other reporting systems to attest for 2017, such as the Hospital IQR Program reporting portal. Eligible professionals who have successfully demonstrated meaningful use in a prior year would not be attesting to the Medicare EHR Incentive Program for 2017, because the applicable EHR reporting period for the 2018 payment adjustment is in 2016 (80 FR 62906), and 2016 is also the final year of the incentive payment under section 1848(o)(1)(A)(ii) of the Act.

We further note that providers using 2014 Edition, 2015 Edition, or any combination of 2014 and 2015 Edition certified EHR technology in 2017 would have the necessary technical capabilities to attest to the Modified Stage 2 objectives and measures.

We proposed corresponding revisions to the regulations at proposed 42 CFR 495.40(a)(2)(i)(F) and 42 CFR 495.40(b)(2)(i)(F) to require new participants to attest to the Modified Stage 2 objectives and measures for 2017.

We note that we also proposed an editorial correction to the introductory language to 42 CFR 495.40(b), to correct the inadvertent omission of the word ''satisfy'' after the term ''CAH must.''

We invited public comment on our proposals.

Comment: Several commenters agreed that new participants to the Medicare EHR Incentive program should attest to Modified Stage 2 objectives and measures in 2017 and stated that the proposed requirements protect new participants from having to attest to Stage 3 requirements which they believe are challenging and unattainable.

Response: We agree that allowing for new participants to attest to Modified Stage 2 objectives and measures provide them an opportunity to successfully participate in the EHR Incentive Program. We reiterate that we are requiring new participants seeking to avoid the payment adjustment in 2018 by attesting early in 2017 to attest to only the Modified Stage 2 objectives and measures and will not allow these providers to attest to the Stage 3 objectives and measures. We are adopting this policy because as we are transitioning EPs to the advancing care information category of MIPS in 2017 and eligible hospitals will be reporting under the Hospital IQR Program in 2017 as well, Therefore, it is not feasible for providers attesting early in 2017 to avoid the payment adjustment in 2018 to attest to the Stage 3 objectives and measures and they will instead be allowed to attest to only the Modified Stage 2 objectives and measures.

We believe this requirement will prepare these participants for success in MIPS and Stage 3 of the EHR Incentive Program in 2018. Also, while we agree that the objectives and measures for Stage 3 are challenging, we do not believe that they are unattainable.

Comment: Several commenters recommended that the Modified Stage 2 attestation date for new participants be pushed back from October 1, 2017 to a later date. One commenter disagreed with CMS' statement that new participants attesting to Stage 3 is not technically feasible, and stated it would be beneficial for health care organizations if CMS could technically support Stage 3 attestation for new participants in 2017. One commenter stated that CMS should establish modified criteria for new program participants that will prepare them to meet subsequent stages successfully, stating that Modified Stage 2 requirements place an unfair burden on new participants.

Response: We thank the commenters for their recommendations. However, we do not agree that we should push the date back later. The reason for having an October 1, 2017 attestation deadline is to accommodate all the changes to the new systems that will occur specifically to the technology certified to the 2015 edition updates in the attestation system.

We also believe that developing modified requirements for new participants would further create confusion among health care providers and would create undue administrative burden, in addition to not being technically feasible. In addition, requiring new participants to attest to Modified Stage 2 in 2017 provides new participants with the experience necessary to attest to future stages of meaningful use and prepares those EPs who will transition to MIPS in 2017.

Comment: One commenter asked whether the proposals extend to the Medicaid EHR Incentive Program.

Response: The proposal to require attestation to Modified Stage 2 is for all new participants, including those who participate in the Medicaid EHR Incentive Program.

Comment: One commenter asked CMS to present the proposal in a table or grid format for clarity.

Response: We will provide guidance materials on our Web page at: *https://www.cms.gov/EHRIncentivePrograms/* after this final rule with comment period is published.

After consideration of the public comments we received, we are

finalizing our proposed policy at 42 CFR 495.40(a)(2)(i)(F) and 42 CFR 495.40(b)(2)(i)(F) to require new participants to attest to the Modified Stage 2 objectives and measures for 2017.

We did not receive any public comments specific to our proposed editorial correction to 42 CFR 495.40(b), and we are finalizing the correction as proposed.

F. Significant Hardship Exception for New Participants Transitioning to MIPS in 2017

In the 2016 MIPS and APMs proposed rule (81 FR 28161 through 28586), we proposed calendar year 2017 as the first MIPS performance period. As established in the 2015 EHR Incentive Programs Final Rule (80 FR 62904 through 62908), 2017 is also the last year in which new participants may attest to meaningful use (for a 90-day EHR reporting period in 2017) to avoid the 2018 payment adjustment. For the reasons stated in the CY 2017 OPPS/ASC proposed rule (81 FR 45754), we proposed to allow certain EPs to apply for a significant hardship exception from the 2018 payment adjustment as authorized under section 1848(a)(7)(B) of the Act. We limited this proposal only to EPs who have not successfully demonstrated meaningful use in a prior year, intend to attest to meaningful use for an EHR reporting period in 2017 by October 1, 2017, to avoid the 2018 payment adjustment, and intend to transition to MIPS and report on measures specified for the advancing care information performance category under the MIPS in 2017.

To apply for this significant hardship exception, we proposed an EP would submit an application by October 1, 2017 (or a later date specified by CMS) to CMS that includes sufficient information to show that they are eligible to apply for this particular category of significant hardship exception. The application must also explain why, based on their particular circumstances, demonstrating meaningful use for the first time in 2017 under the EHR Incentive Program and also reporting on measures specified for the advancing care information performance category under the MIPS in 2017 would result in a significant hardship. EPs should retain all relevant documentation of this hardship for 6 years post attestation.

We stated in the proposed rule that we believed this new category of significant hardship exception would allow the EPs who are new to certified EHR technology to focus on their transition to MIPS, and allow them to work with their EHR vendor to build out an EHR system focused on the goals of patient engagement and interoperability, which are important pillars of patient-centered care and expected to be highly emphasized in the MIPS. It would also allow EPs to identify which objectives and measures are most meaningful to their practice which is a key feature of the proposed MIPS advancing care information performance category. We also proposed to amend the regulations by adding new § 495.102(d)(4)(v) to include this new category of significant hardship exception.

We invited public comment on our proposals.

Comment: Several commenters agreed with limiting the hardship exception to certain EPs by allowing new program participants to focus on meeting the requirements of MIPS instead of meeting the requirements of a program that will end soon.

Response: We thank the commenters for their support of the hardship exception for certain EPs. As stated in the propose rule (81 FR 45753), we want to provide first time participants who are new to meaningful use and will participate in MIPS ample time to adjust to the new reporting requirements. We believe that limiting this hardship exception to these new EPs, who would otherwise have to report to the Medicare EHR Incentive Program and MIPS, will provide these EPs more time to get adjusted to MIPS.

Comment: Several commenters supported the proposal. They also requested that CMS adopt a hardship exception application process that is as simple and readily available as possible for EPs affected by this policy.

Response: We thank the commenters for their support in this one-time significant hardship exception. Once this proposal is finalized, we will develop an application process that will be accessible for those who are applying for such an exception.

Comment: Several commenters appreciated CMS' flexibility in proposing to allow certain EPs to apply for a one time significant hardship exception. Commenters agreed that the hardship exception will help new participants focus on preparing for and successfully participating in MIPS.

Response: We thank the commenters for their support. As discussed previously we are providing this one-time hardship exception to improve chances of successful participation in MIPS.

Comment: Several commenters requested that the application deadline for a hardship exception be extended.

Response: We thank the commenters for their suggestion. However, as provided in the proposed rule the first time participants to the EHR Incentive Program have to attest by October 1, 2017. Therefore, it would not be desirable to extend the application deadline beyond this date.

Comment: Several commenters urged CMS not to finalize the hardship exception because they believed it provides incentives for procrastination and noncompliance.

Response: We thank the commenters for their views. However, we disagree with the commenters. We believe that, with this one-time hardship exception, we are providing new EPs an opportunity to prepare for the work to follow under MIPS. We believe that, through providing this hardship exception, we are improving the chances of successful participation under the MIPS.

Comment: Several commenters recommended that CMS include all new participants, rather than just certain EPs, in the hardship exception.

Response: We disagree that this policy should be extended to all new participants, as only EPs are transitioning to MIPS. This policy is to help those participants transitioning to MIPS to not have to attest to two different programs in order for them to focus their efforts on the new requirements under MIPS.

Comment: Several commenters stated that the hardship application requirement is unnecessary and too burdensome on physicians. Commenters suggested that EPs who have not previously participated in meaningful use automatically be granted a hardship exception from the meaningful use payment adjustment in 2018.

Response: We believe an application process is warranted for this significant hardship exception because we do not know how else we would verify that an EP meets the criteria for this exception, including the requirement that the EP show that, based on their particular circumstances, demonstrating meaningful use for the first time in 2017 under the EHR Incentive Program and also reporting on measures specified for the advancing care information performance category under the MIPS in 2017 would result in a significant hardship. We also believe that for some EPs this may not be a significant hardship, and thus we do not want to take the opportunity away for them to successfully participate in both the EHR Incentive Program and MIPS in 2017.

Comment: Several commenters urged CMS to communicate clearly the availability of the hardship exception to

all program participants prior to the 2017 EHR reporting period. These commenters stated that it is important that new participants who intend to transition into MIPS have the opportunity to focus on the measures and requirements specified for the proposed advancing care information performance category in 2017.

Response: We thank the commenters for their suggestion and rationale. We will work with our stakeholders to clearly communicate the availability of the hardship exception application once available. We plan to do this early enough in 2017 to ensure these new participants can focus on the relevant categories under MIPS.

After consideration of the public comments we received, we are finalizing the significant hardship exception for new participants transitioning to MIPS in 2017 as proposed. We are codifying this final policy at § 495.102(d)(4)(v).

G. Modifications To Measure Calculations for Actions Outside the EHR Reporting Period

In the CY 2017 OPPS/ASC proposed rule (81 FR 45755), we proposed that, for all meaningful use measures, unless otherwise specified, actions included in the numerator must occur within the EHR reporting period if that period is a full calendar year, or if it is less than a full calendar year, within the calendar year in which the EHR reporting period occurs. For example, if the EHR reporting period is any continuous 90-day period within CY 2017, the action must occur between January 1 and December 31, 2017, but does not have to occur within the 90-day EHR reporting period timeframe.

We note that FAQ 8231 was intended to help providers who initiate an action in their EHR after December 31 that is related to a patient encounter that occurred during the year of the EHR reporting period. We understand that a small number of actions may occur after December 31 of the year in which the EHR reporting period occurs.

However, we believe that the reduced measure thresholds proposed in the proposed rule would significantly reduce the impact that these actions would have on performance. In addition, we note that actions occurring after December 31 of the reporting year would count toward the next calendar year's EHR reporting period.

We invited public comment on our proposals.

Comment: Several commenters agreed with the proposal to require for all actions included in the numerator to occur within the EHR reporting period.

Response: We thank the commenters for their support. We believe that actions which occur outside of the EHR reporting period should be kept within the same calendar year because it could lead to attesting more than once on the same action but for different calendar year reporting periods.

Comment: Several commenters suggested that CMS revise FAQ 8231 in order to further clarify this change if it is finalized.

Response: We plan to update FAQ 8231 to explain the new policy.

Comment: Several commenters suggested that if CMS were to make a change to the reporting logic, it should be implemented as part of Stage 3, not to the Stage 2 modification.

Response: We thank the commenters for their suggestion. We do not believe that this change should be implemented as part of Stage 3 only. We believe that the intention of this policy is to be inclusive of both Modified Stage 2 objectives and measures and Stage 3 objectives and measures in order to accurately measure how EPs, eligible hospitals and CAHs are performing on the measures affected by this policy.

Comment: Several commenters suggested clarifying and maintaining the current policy to allow physicians to count actions that take place from the beginning of the calendar year of the EHR reporting period.

Response: We do not agree with the suggestion that we maintain the current policy. The goal of the new policy is to require all actions that occur during an EHR reporting period to only be counted once. We note that with the previous policy there was potential that some actions could be counted during two separate EHR reporting periods.

Comment: Several commenters requested that CMS clarify reporting timelines, specifically related to actions outside of the EHR reporting period.

Response: We clarify that the action do not have to occur within the 90 day EHR reporting period timeframe, but must occur between January 1 and December 31 (or within the calendar year).

Comment: Several commenters asked CMS to clarify whether this proposed policy applies to all EPs, eligible hospitals, and CAHs.

Response: The proposed policy for actions outside the EHR reporting period applies to all EPs, eligible hospitals and CAHs beginning January 1, 2017.

After consideration of the public comments we received, we are finalizing that, for all meaningful use measures, unless otherwise specified, actions included in the numerator must occur within the EHR reporting period if that period is a full calendar year, or if that period is less than a calendar year, actions included in the numerator must occur within the calendar year in which the EHR reporting period occurs. This policy applies beginning with EHR reporting periods in CY 2017.

XIX. Additional Hospital Value-Based Purchasing (VBP) Program Policies

A. Background

Section 1886(o) of the Act, as added by section 3001(a)(1) of the Affordable Care Act, requires the Secretary to establish a hospital value-based purchasing program (the Hospital Value-Based Purchasing (VBP) Program) under which value-based incentive payments are made in a fiscal year to hospitals that meet performance standards established for a performance period for such fiscal year. Both the performance standards and the performance period for a fiscal year are to be established by the Secretary. We refer readers to the FY 2017 IPPS/LTCH PPS final rule for a full discussion of the Hospital VBP Program and its finalized policies (81 FR 56979 through 57011).

B. Removal of the HCAHPS Pain Management Dimension From the Hospital VBP Program

1. Background of the HCAHPS Survey in the Hospital VBP Program

Section 1886(o)(2)(A) of the Act requires the Secretary to select for the Hospital VBP Program measures, other than readmission measures, for purposes of the program. CMS partnered with the Agency for Healthcare Research and Quality (AHRQ) to develop the Hospital Consumer Assessment of Healthcare Providers and Systems (HCAHPS) patient experience of care survey (NQF #0166) (hereinafter referred to as the HCAHPS Survey). We adopted the HCAHPS Survey in the Hospital VBP Program beginning with the FY 2013 program year (76 FR 26510), and we added the 3-Item Care Transition Measure (CTM–3) (NQF #0228) as the ninth dimension in the HCAHPS Survey beginning with the FY 2018 program year (80 FR 49551 through 49553). The HCAHPS Survey scores for the Hospital VBP Program are the basis for the Patient- and Caregiver-Centered Experience of Care/Care Coordination domain.

The HCAHPS Survey is the first national, standardized, publicly reported survey of patients' experience of hospital care. The HCAHPS Survey asks discharged patients 32 questions about their recent hospital stay. Survey results are used to score nine

dimensions of the patient's experience of care for the Hospital VBP Program, as the table below illustrates.

HCAHPS Survey Dimensions for the FY 2018 Program Year
Communication with Nurses.
Communication with Doctors.
Responsiveness of Hospital Staff.
Pain Management.
Communication About Medicines.
Hospital Cleanliness & Quietness.
Discharge Information.
3-Item Care Transition.
Overall Rating of Hospital.

The HCAHPS Survey is administered to a random sample of adult patients who receive medical, surgical, or maternity care between 48 hours and 6 weeks (42 calendar days) after discharge and is not restricted to Medicare beneficiaries. Hospitals must survey patients throughout each month of the year. The HCAHPS Survey is available in official English, Spanish, Chinese, Russian, Vietnamese, and Portuguese versions. The HCAHPS Survey and its protocols for sampling, data collection and coding, and file submission can be found in the current HCAHPS *Quality Assurance Guidelines,* which is available on the official HCAHPS Web site at: *http://www.hcahpsonline.org/qaguidelines.aspx.* AHRQ carried out a rigorous, scientific process to develop and test the HCAHPS instrument. This process entailed multiple steps, including: A public call for measures; literature reviews; cognitive interviews; consumer focus groups; multiple opportunities for additional stakeholder input; a 3-State pilot test; small-scale field tests; and notice-and-comment rulemaking. In May 2005, the HCAHPS Survey was endorsed by the NQF (#0166).

2. Background of the Patient- and Caregiver-Centered Experience of Care/Care Coordination Domain Performance Scoring Methodology

As previously finalized in the FY 2016 IPPS/LTCH PPS final rule (80 FR 49565 through 49566), beginning with the FY 2018 program year, for each of the 9 dimensions of the HCAHPS Survey that we have adopted for the Hospital VBP Program, we calculate Achievement Points (0 to 10 points) and Improvement Points (0 to 9 points), the larger of which is summed across the nine dimensions to create a prenormalized HCAHPS Base Score (0 to 90 points). The prenormalized HCAHPS Base Score is then multiplied by 8/9 (0.88888) and rounded according to standard rules (values of 0.5 and higher are rounded up; values below 0.5 are rounded down) to create the normalized HCAHPS Base Score. Each of the nine dimensions is weighted equally, so that the normalized HCAHPS Base Score would range from 0 to 80 points. HCAHPS Consistency Points are then calculated and range from 0 to 20 points. The Consistency Points consider scores across all nine of the dimensions. The final element of the scoring formula is the sum of the HCAHPS Base Score and the HCAHPS Consistency Points, and that sum will range from 0 to 100 points. The Patient- and Caregiver-Centered Experience of Care/Care Coordination domain accounts for 25 percent of a hospital's Total Performance Score (TPS) for the FY 2018 program year (80 FR 49561).

3. Removal of the HCAHPS Pain Management Dimension From the Hospital VBP Program Beginning With the FY 2018 Program Year

As noted above, one of the HCAHPS Survey dimensions that we have adopted for the Hospital VBP Program is Pain Management. Three survey questions are used to construct this dimension,[252] as follows:

- 12. During this hospital stay, did you need medicine for pain?

☐ Yes
☐ No (If No, Go to Question 15)

- 13. During this hospital stay, how often was your pain well controlled?

☐ Never
☐ Sometimes
☐ Usually
☐ Always

- 14. During this hospital stay, how often did the hospital staff do everything they could to help you with your pain?

☐ Never
☐ Sometimes
☐ Usually
☐ Always

We have received feedback that some stakeholders are concerned about the Pain Management dimension questions being used in a program where there is any link between scoring well on the questions and higher hospital payments. Some stakeholders believe that the linkage of the Pain Management dimension questions to the Hospital VBP Program payment incentives creates pressure on hospital staff to prescribe more opioids in order to achieve higher scores on this dimension. Many factors outside the control of CMS quality program requirements may contribute to the perception of a link between the Pain Management dimension and opioid prescribing practices, including misuse of the survey (such as using it for outpatient emergency room care instead of inpatient care, or using it for determining individual physician performance) and failure to recognize that the HCAHPS Survey excludes certain populations from the sampling frame (such as those with a primary substance use disorder diagnosis).

Because some hospitals have identified patient experience as a potential source of competitive advantage, we have heard that some hospitals may be disaggregating their raw HCAHPS data to compare, assess, and incentivize individual physicians, nurses, and other hospital staff. Some hospitals also may be using the HCAHPS Survey to assess their emergency and outpatient departments. The HCAHPS Survey was never intended to be used in these ways.[253]

We continue to believe that pain control is an appropriate part of routine patient care that hospitals should manage and is an important concern for patients, their families, and their caregivers. It is important to note that the HCAHPS Survey does not specify any particular type of pain control method. In addition, appropriate pain management includes communication with patients about pain-related issues, setting expectations about pain, shared decision-making, and proper prescription practices. Although we are not aware of any scientific studies that support an association between scores on the Pain Management dimension questions and opioid prescribing practices, we are developing alternative questions for the Pain Management dimension in order to remove any potential ambiguity in the HCAHPS Survey. We are following our standard survey development processes, which include drafting alternative questions, cognitive interviews and focus group evaluation, field testing, statistical analysis, stakeholder input, the Paperwork Reduction Act, and NQF endorsement. HHS is also conducting further research to help better understand these stakeholder concerns and determine if there are any unintended consequences that link the Pain Management dimension questions to opioid prescribing practices. In addition, we are in the early stages of developing an electronically specified

[252] Available at: *http://www.hcahpsonline.org/surveyinstrument.aspx.*

[253] L. Tefera, W.G. Lehrman, and P. Conway. ''Measurement of the Patient Experience: Clarifying Facts, Myths, and Approaches.'' *Journal of the American Medical Association.* Published online, 3–10–16. *http://jama.jamanetwork.com/article.aspx?articleid=2503222.*

process measure for the inpatient and outpatient hospital settings that would measure concurrent prescribing of an opioid and benzodiazepine. We also are in the early stages of developing a process measure that would assess whether inpatient psychiatric facilities are regularly monitoring for adverse drug events of opioid and psychotropic drugs. The measure specifications for any future measures will be posted on the CMS Web page and the public will have an opportunity to provide feedback before we make any proposal to adopt it for quality reporting purposes.

Due to some potential confusion about the appropriate use of the Pain Management dimension questions in the Hospital VBP Program and the public health concern about the ongoing prescription opioid overdose epidemic, while we await the results of our ongoing research and the above-mentioned process for developing modifications to the Pain Management dimension questions, we proposed in the CY 2017 OPPS/ASC proposed rule (81 FR 45755 through 45757) to remove the Pain Management dimension of the HCAHPS Survey in the Patient- and Caregiver-Centered Experience of Care/Care Coordination domain beginning with the FY 2018 program year. The FY 2018 program year uses HCAHPS performance period data from January 1, 2016 to December 31, 2016 to calculate each hospital's TPS, which affects FY 2018 payments. When modified Pain Management questions for the HCAHPS Survey become available for use in the Hospital VBP Program, and subject to the statutory requirements listed in sections 1886(o)(2)(A) and 1886(o)(2)(C)(i) of the Act, we intend to propose to adopt them in future rulemaking.

In the proposed rule, we stated that finalizing our proposal to remove the Pain Management dimension would leave eight dimensions in the HCAHPS Survey, as the table below illustrates.

PROPOSED HCAHPS SURVEY DIMENSIONS FOR THE FY 2018 PROGRAM YEAR

Communication with Nurses.
Communication with Doctors.
Responsiveness of Hospital Staff.
Communication About Medicines.
Hospital Cleanliness & Quietness.
Discharge Information.
3-Item Care Transition.
Overall Rating of Hospital.

In order to adjust for the removal of the Pain Management dimension from the HCAHPS Survey, we proposed to continue to assign Achievement Points (0 to 10 points) and Improvement Points (0 to 9 points) to each of the remaining eight dimensions in order to create the HCAHPS Base Score (0 to 80 points) (81 FR 45756). Each of the remaining eight dimensions would be of equal weight, so that the HCAHPS Base Score would range from 0 to 80 points. HCAHPS Consistency Points would then be calculated, and would range from 0 to 20 points. The Consistency Points would consider scores across the remaining eight dimensions, and would not include the Pain Management dimension. The final element of the scoring formula would be the sum of the HCAHPS Base Score and the HCAHPS Consistency Points and would range from 0 to 100 points.

For the FY 2018 program year, we finalized performance standards for the HCAHPS measures in the FY 2016 IPPS/LTCH PPS final rule (80 FR 49566). In the CY 2017 OPPS/ASC proposed rule (81 FR 45757), we proposed to remove the Pain Management dimension of the HCAHPS Survey in the calculation of the Patient- and Caregiver-Centered Experience of Care/Care Coordination domain score beginning with the FY 2018 program year. The performance standards for the other eight dimensions would remain unchanged, as the table below illustrates.

PERFORMANCE STANDARDS FOR THE FY 2018 PROGRAM YEAR

HCAHPS survey dimension	Floor * (percent)	Achievement threshold ** (percent)	Benchmark *** (percent)
Communication with Nurses	55.27	78.52	86.68
Communication with Doctors	57.39	80.44	88.51
Responsiveness of Hospital Staff	38.40	65.08	80.35
Pain Management	N/A	N/A	N/A
Communication about Medicines	43.43	63.37	73.66
Hospital Cleanliness & Quietness	40.05	65.60	79.00
Discharge Information	62.25	86.60	91.63
3-Item Care Transition	25.21	51.45	62.44
Overall Rating of Hospital	37.67	70.23	84.58

* Floor is defined as the 0th percentile of the baseline (76 FR 26519).
** Achievement threshold is defined as the 50th percentile of hospital performance in the baseline period (76 FR 26519).
*** Benchmark is defined as the mean of the top decile of hospital performance on each dimension (76 FR 26517).

For the FY 2019 program year, we proposed performance standards in the FY 2017 IPPS/LTCH PPS proposed rule (81 FR 25114), and finalized performance standards in the FY 2017 IPPS/LTCH PPS final rule (81 FR 57006 through 57007). The table below reflects the finalized performance standards for the FY 2019 program year. In the CY 2017 OPPS/ASC proposed rule (81 FR 45757), we proposed to remove the Pain Management dimension of the HCAHPS Survey in the calculation of the Patient- and Caregiver-Centered Experience of Care/Care Coordination domain score beginning with the FY 2018 program year. (In section IV.H.3.b. of the FY 2017 IPPS/LTCH PPS final rule, we also finalized our proposal to change the name of this domain to the Person and Community Engagement domain beginning with the FY 2019 program year (81 FR 56984)). The performance standards for the other eight dimensions would remain unchanged, as the table below illustrates.

PERFORMANCE STANDARDS FOR THE FY 2019 PROGRAM YEAR

HCAHPS survey dimension	Floor * (percent)	Achievement threshold ** (percent)	Benchmark *** (percent)
Communication with Nurses	28.10	78.69	86.97
Communication with Doctors	33.46	80.32	88.62
Responsiveness of Hospital Staff	32.72	65.16	80.15
Pain Management	N/A	N/A	N/A
Communication about Medicines	11.38	63.26	73.53
Hospital Cleanliness & Quietness	22.85	65.58	79.06
Discharge Information	61.96	87.05	91.87
3-Item Care Transition	11.30	51.42	62.77
Overall Rating of Hospital	28.39	70.85	84.83

* Floor is defined as the 0th percentile of the baseline (76 FR 26519).
** Achievement threshold is defined as the 50th percentile of hospital performance in the baseline period (76 FR 26519).
*** Benchmark is defined as the mean of the top decile of hospital performance on each dimension (76 FR 26517).

We invited public comments on these proposals.

Comment: Many commenters supported CMS' proposal to remove the Pain Management dimension of the HCAHPS Survey from the Hospital VBP Program based on their concern that the survey questions may inadvertently create incentives and undue pressure for providers to prescribe opioids in order to achieve higher scores on the HCAHPS Survey, which may contribute to the opioid epidemic. Commenters also noted that removing the Pain Management dimension will resolve the perceived conflict between appropriate management of opioid use and patient satisfaction by allowing practitioners to use their best judgment in managing patients' pain and providing effective, appropriate patient care. Some of these commenters believed that removing these questions from hospitals' scores will reduce providers' fear of negative feedback on the HCAHPS Survey and, in turn, reduce inappropriately high opioid prescription dosages and durations.

Other commenters supported removing the Pain Management dimension of the HCAHPS Survey from the Hospital VBP Program based on a belief that scoring hospitals on patients' perception of the adequacy of their pain management unfairly penalizes providers by inappropriately linking clinical decision-making to payment. These commenters also expressed concern that linking assessment of patient experience of care with pain management has led to an increase in opioid prescription when other pain management, such as use of nonsteroidal anti-inflammatory drugs, has failed.

A number of commenters noted the importance of measuring patients' experience of pain management despite these concerns with the current Pain Management dimension questions, and urged CMS to develop alternative questions to assess patients' pain management as soon as practicable. A few of these commenters also encouraged CMS to act to ensure that patients receive an appropriate level of pain control through methods that do not encourage excessive opioid prescription.

Response: We thank the commenters for their support. We are not aware of any scientific studies that support an association between scores on the Pain Management dimension questions and opioid prescribing practices. In addition, we continue to believe that many factors outside the control of CMS quality program requirements may contribute to the perception of a link between the Pain Management dimension and opioid prescribing practices; that pain control is an appropriate part of routine patient care that hospitals should manage; and that pain control is an important concern for patients, their families, and their caregivers.[254] However, we believe that removing the Pain Management dimension from the Hospital VBP Program scoring calculations will address potential confusion about the appropriate use of the Pain Management dimension, and provide us with an opportunity to further refine the pain management questions used in the HCAHPS Survey.

Comment: A number of commenters disagreed with the assertion that the HCAHPS Survey Pain Management questions influence clinical decision-making, citing the lack of empirical evidence to support this position, but supported CMS' proposal to remove the Pain Management dimension of the HCAHPS Survey from the Hospital VBP Program because it will provide CMS and the hospital community with an opportunity to refine the pain management questions on the HCAHPS Survey.

Response: We thank the commenters for their support. As noted above, we are not aware of any scientific studies that support an association between scores on the Pain Management dimension questions and opioid prescribing practices. Nevertheless, we believe that removing the Pain Management dimension from the Hospital VBP Program scoring calculations will address potential confusion about the appropriate use of the Pain Management dimension, and provide us with an opportunity to further refine the pain management questions used in the HCAHPS Survey.

Comment: Several commenters supported CMS' proposal to remove the Pain Management dimension of the HCAHPS Survey from the Hospital VBP Program because the current questions focus on pain control rather than pain communication, which the commenters believe could create a perverse incentive to inappropriately prescribe opioids and other pain medication. One commenter supported removal of the Pain Management dimension based on concerns regarding the wording of the pain management questions and how it may influence patient responses to these questions. Specifically, the commenter expressed concern that the current question wording may imply that pain is only an issue if the patient needed medicine, that medicine is the only means to reduce pain, and that medication should be administered to the point of cessation of all pain. Another commenter expressed concern that the current pain management questions may not accurately reflect the quality of care received at the hospital because they do not factor in all

[254] L. Tefera, W.G. Lehrman, and P. Conway. ''Measurement of the Patient Experience: Clarifying Facts, Myths, and Approaches.'' *Journal of the American Medical Association.* Published online, 3–10–16. *http://jama.jamanetwork.com/article.aspx?articleid=2503222.*

elements of clinical decision-making and the individual circumstances of a patient's episode of care.

Response: We acknowledge commenters' concerns about the current Pain Management questions, and we will take the feedback into consideration as we continue to develop, test, and empirically assess potential alternative questions that focus on communication with patients about pain management as potential replacements for the Pain Management questions currently included in the HCAHPS Survey. As discussed in the CY 2017 OPPS/ASC proposed rule, we are following our standard survey development processes, which include drafting alternative questions, cognitive interviews and group evaluation, field testing, statistical analysis, and soliciting stakeholder input.

Comment: One commenter supported CMS' proposal to remove the Pain Management dimension from the Hospital VBP Program because the commenter believed that only the most reliable and valid measures should be included when Medicare payment is at risk.

Response: We thank the commenter for the support of our proposal. We continue to believe the HCAHPS Survey Pain Management questions, and the HCAHPS Survey as a whole, are valid and reliable measures of hospital quality that encourage hospitals to assess and improve patient experience. We further note that the HCAHPS Survey, including the Pain Management questions, is NQF-endorsed (NQF #0166). However, we believe that removing the Pain Management dimension from the Hospital VBP Program scoring calculations will address potential confusion about the appropriate use of the Pain Management dimension, and provide us with an opportunity to further refine the pain management questions used in the HCAHPS Survey.

Comment: One commenter recommended that hospitals continue to survey patients about their inpatient pain management experience because pain management is an important aspect of quality care.

Response: We agree with commenter that management of patients' pain is an important aspect of quality care. We note that the administration and reporting of the full HCAHPS Survey, including the current Pain Management questions, remains part of the Hospital IQR Program. In addition, we will continue to make publicly available the data reported under the Hospital IQR Program on our *Hospital Compare* Web site.

Comment: Some commenters did not support CMS' proposal to remove the HCAHPS Survey Pain Management dimension from the Hospital VBP Program due to the lack of evidence linking these questions to opioid overprescribing. Specifically, commenters stated that there is a lack of evidence that the HCAHPS Survey has inappropriately influenced providers' prescribing patterns; that there is no evidence that prescribed opioids are primarily responsible for opioid abuse or opioid-related deaths; and that there is no evidence to suggest that assessing and controlling pain in hospitalized inpatients is responsible for initiating or perpetuating the opioid epidemic. One commenter expressed concern that removing these pain management questions from hospitals' scores in the Hospital VBP Program would eliminate an important driver of progress to develop improved means of acute pain assessment. Another commenter expressed concern that removing the Pain Management dimension from the Hospital VBP Program may result in pain management issues being excluded from hospitals' quality improvement efforts. These commenters recommended that CMS explore opportunities to modify the Pain Management dimension questions in the HCAHPS Survey, but not remove these questions from the HCAHPS Survey or the Hospital VBP Program's scoring calculations until alternative questions are available to replace them.

Other commenters did not support CMS' proposal to remove the Pain Management dimension from the Hospital VBP Program because they believe doing so ignores the needs of patients who require treatment for pain. These commenters also expressed their concern that removing these questions may result in inadequate pain treatment for patients in need of such treatment.

Response: We remain dedicated to improving the quality of care provided to patients, including the appropriate management of pain and communication between patients and their providers regarding pain. We continue to believe that pain control is an appropriate part of routine patient care that hospitals should manage and is an important concern for patients, their families, and their caregivers. Furthermore, we are unaware of any empirical evidence demonstrating that failing to prescribe opioids lowers a hospital's HCAHPS Survey scores. However, we believe the potential confusion about the appropriate use of the Pain Management dimension questions, coupled with the public health concern about the opioid epidemic, warrants removing these questions from Hospital VBP Program scoring calculations until alternative pain management questions are available. We note that hospitals would continue to administer the full HCAHPS Survey, including the current Pain Management questions, to eligible patients. In addition, we note that hospital performance rates on all HCAHPS Survey measures will still be publicly reported under the Hospital IQR Program on *Hospital Compare* and used in calculating HCAHPS star ratings and *Hospital Compare* overall ratings. We believe continued public reporting of Pain Management performance rates appropriately balances the need to provide the public with important quality data for use in health care decision-making and to incentivize quality improvement regarding pain management and communication with our desire to address the perceived conflict between appropriate management of opioid use and patient satisfaction by relieving the pressure physicians may feel to overprescribe opioids. We further believe continued public reporting of Pain Management performance rates will provide important information to patients and consumers and encourage hospitals to appropriately manage patients' pain and continue engaging in quality improvement efforts.[255]

Comment: One commenter recommended that CMS make concerted efforts to inform Medicare providers of the CDC's recently published ''Guideline for Prescribing Opioids for Chronic Pain.''

Response: We thank the commenter for the recommendation and note that this information is publicly available on the CDC's Web site at: *http://www.cdc.gov/drugoverdose/prescribing/guideline.html.* The guideline provides recommendations that focus on the use of opioids in treating chronic pain (defined as pain lasting longer than 3 months or past the time of normal tissue healing) outside of active cancer treatment, palliative care, and end-of-life care. We encourage prescribing clinicians to follow this guideline for prescribing opioids for chronic pain.

Comment: Many commenters supported the development of alternative questions regarding pain management for the HCAHPS Survey and recommended that CMS submit the revised survey to NQF for endorsement

[255] L. Tefera, W.G. Lehrman, and P. Conway. ''Measurement of the Patient Experience: Clarifying Facts, Myths, and Approaches.'' *Journal of the American Medical Association.* Published online, 3–10–16. *http://jama.jamanetwork.com/article.aspx?articleid=2503222.*

following a rigorous survey development process. A large number of commenters provided specific recommendations regarding the context and content of these alternative questions. Numerous commenters recommended that the alternative questions should include whether a patient's pain was assessed; whether treatment options were discussed with the patient, including discussion of the risks and benefits associated with opioid prescription and the potential for use of alternative, non-opioid pain management therapy, and interventions made; and whether the patient's pain was reassessed following intervention to determine its effectiveness. Other commenters recommended that the alternative questions focus on effective provider communication with patients about pain management-related issues, appropriate expectations about pain relief, patient understanding of interventions offered to address pain, and shared decision-making and proper prescription practices. Some commenters specifically recommended that CMS assess patients' understanding of the interventions offered to address the patient's pain. Some commenters urged CMS to pay particular attention to the difference between acute and chronic pain treatment, individual patient's pain management goals, and the risks of the particular clinical situation in pain management decision-making. Commenters also urged CMS to acknowledge the role of palliative care in pain management decision-making.

One commenter recommended that CMS define a high-quality patient experience as one in which the health care provider discussed pain management treatment options with patients and patients believed they had the opportunity to engage in the discussion to determine the most appropriate treatment option. Another commenter recommended the development of alternative questions regarding pain management for the HCAHPS Survey that align with the pain control and communication questions in the OAS CAHPS Survey. Other commenters recommended that these alternative questions be studied for their potential effect on clinical behavior and patient outcomes, including any unintended consequences such as creating barriers to access opioids when they are clinically appropriate.

Response: We thank the commenters for their recommendations regarding the alternative questions for the HCAHPS Survey. We will take these recommendations into consideration as we continue to develop, test, and empirically assess potential alternative questions that focus on communication with patients about pain management as potential replacements for the Pain Management questions currently included in the HCAHPS Survey. As discussed in the CY 2017 OPPS/ASC proposed rule, we are following our standard survey development processes, which include drafting alternative questions, cognitive interviews and group evaluation, field testing, statistical analysis, and soliciting stakeholder input. Any specific Pain Management questions that would be considered for use in a CMS program will proceed through the prerulemaking process, including listing of measures on the ''Measures Under Consideration'' list and review by the Measures Application Partnership, as well as notice-and-comment rulemaking in the future. In addition, we intend to seek NQF endorsement for the alternative questions we decide to propose to use in the HCAHPS Survey once these survey development processes are complete.

Comment: Several commenters recommended that CMS exclude all patients with substance use disorders on their problem list, not just those patients admitted with a primary diagnosis of a substance use disorder, from the HCAHPS Survey because the commenters believed these patients' survey responses are affected by their underlying conditions, which in turn creates a perverse incentive for providers to prescribe opioids rather than referring patients for substance use disorder treatment.

Response: We thank the commenters for their comments. Since its inception in 2006, HCAHPS has classified eligible patients into three service line categories: Medical, surgical, or maternity care.[256] The recommended method of assignment to service line is the patient's MS–DRG at discharge; if unavailable, CMS permits several alternative methods of service line assignment. Due to methodological considerations, the requirements of national standardization, and the data collection burden placed on hospitals and their HCAHPS Survey vendors, CMS does not collect or employ patients' secondary diagnoses or any other codes, designations, or notes, including ''problem lists.'' We note that patients whose primary diagnosis MS–DRG is substance abuse are ineligible for the HCAHPS Survey under the current HCAHPS Quality Assurance Guidelines.[257] We will take into consideration public comments received as we continually seek to improve our quality measures.

Comment: One commenter encouraged CMS to conduct further assessments of whether, and to what extent, removal of the Pain Management dimension from the Hospital VBP Program scoring calculations influences providers' management of pain. Another commenter urged CMS to study the impact of the HCAHPS Pain Management questions (both the current and alternative questions) on clinician behavior, use of other approaches to pain management, and patient outcomes.

Response: We thank the commenter for the recommendations and will take these concerns into consideration as we continue to develop and test the alternative pain management questions. We note that HHS is also conducting further research to help better understand stakeholder concerns regarding the current HCAHPS Survey Pain Management dimension questions and to determine whether there are any unintended consequences that link the Pain Management dimension questions to opioid prescribing practices.

Comment: One commenter recommended that CMS conduct mode testing for an electronic administration option for the HCAHPS Survey.

Response: We thank the commenter for its recommendation. While email and a Web-based survey are not available survey modes at present, we are actively investigating these modes as possible new options for the future. This ongoing investigation includes exploring whether hospitals receive reliable email addresses and whether there is adequate access to the Internet across all types of inpatients. Ultimately, the purpose of the investigation is to ensure that any new survey administration method does not introduce bias to the survey process.

Comment: One commenter believed that if the HCAHPS Survey can be used for public reporting, the data should also have the ability to be used to change the behavior of individual providers. Furthermore, the commenter believed that individual and groups of providers should be held accountable for HCAHPS Survey results.

Response: While we agree that the HCAHPS Survey can be used to identify general areas for improvement within a hospital, some of which may be addressed through changes in provider

[256] HCAHPS Quality Assurance Guidelines, V11.0, pp. 53–55; 75–76 (2016). *http://www.hcahpsonline.org/qaguidelines.aspx.*

[257] HCAHPS Quality Assurance Guidelines, V11.0, p. 75 (2016). *http://www.hcahpsonline.org/qaguidelines.aspx.*

behavior generally, we disagree with the commenter's assertion that individual providers or provider groups should be held ''accountable'' for hospital scores on the HCAHPS Survey. The HCAHPS Survey is designed to evaluate the performance of a hospital as a whole, not individuals or groups within the larger hospital setting;[258] therefore, its use for evaluating or incentivizing individual providers or groups within the hospital is contrary to the survey's design and policy aim.[259]

Comment: One commenter sought clarification regarding CMS' concerns about hospitals' use of disaggregated HCAHPS Survey results to evaluate individual provider performance on a given question or domain, and whether those concerns are limited to use of disaggregated results on the Pain Management questions. Specifically, the commenter believed that HCAHPS Survey data should be used to improve clinician-patient communication, which is important in quality of care.

Response: We agree with the commenter that clinician-patient communication about pain and pain management are important aspects of quality care. However, disaggregation of HCAHPS Survey results for use in evaluating individual providers' performance on any dimension within the HCAHPS Survey, not just the Pain Management dimension, is not how the HCAHPS Survey was intended to be used. As noted above, the HCAHPS Survey is designed to assess hospital-level performance and is not suitable for evaluating or incentivizing individual providers or provider groups within a hospital. Hospitals can and should use HCAHPS Survey results to identify general areas for improvement within the hospital setting, but should not ascribe those results to individual providers within the hospital.[260]

Comment: A few commenters expressed concern regarding the application of the HCAHPS Survey to the emergency department (ED) setting. These commenters stated that the available evidence indicates ED physicians are most affected by low ratings on patient experience of care surveys, particularly on questions regarding the adequacy of pain medication prescriptions. One commenter asserted that the use of the HCAHPS Survey in the ED setting is inappropriate and urged CMS to refine the pain management questions included in the Emergency Department Patient Experience of Care Survey currently under development and implement the survey in order to better capture patient experience of care in the ED setting.

Response: We agree that use of the HCAHPS Survey in the ED setting to assess outpatient ED care instead of inpatient care is inappropriate. HCAHPS was designed, developed, and intended for hospital level measurement for inpatient stays, not EDs or other individual hospital departments. Other uses of the HCAHPS Survey are not consistent with its design or validation metrics. Accordingly, we encourage hospitals and HCAHPS Survey vendors to review the HCAHPS Survey specifications in order to avoid such instances of misuse. We are continuing our evaluation of the Emergency Department Patient Experience of Care Survey in an effort to develop a survey that will provide patient experience data that enable comparison of EDs across the nation and promote effective communication and coordination, and we intend to address its potential use in CMS' quality programs in the future. We also note that, in section XIII.B.5.c. of this final rule with comment period, we are finalizing adoption of five survey-based measures in the Hospital OQR Program utilizing the OAS CAHPS Survey, a patient experience of care survey developed for use with selected outpatient surgical procedures.

Comment: A number of commenters expressed concern about the continued public reporting of the HCAHPS Pain Management measure in other CMS quality reporting programs, specifically the Hospital IQR Program, including HCAHPS star ratings and *Hospital Compare* overall ratings. Commenters stated that use of these questions in these quality reporting programs may still lead to potential overprescribing of opioids to at-risk patients. Some commenters also expressed concern that public reporting of these scores could distort the public's perception of the quality of care provided at certain hospitals. Commenters recommended that CMS remove or exclude hospital scores on the HCAHPS Survey's Pain Management questions from *Hospital Compare* reporting, including HCAHPS star ratings and *Hospital Compare* overall ratings, until alternative questions are developed and adopted for these programs.

Response: Pain management is an important component of the quality of care provided at a hospital, and we believe continued public reporting of hospital rates on the HCAHPS Survey Pain Management questions, without linkage to payment, properly balances these concerns with our desire to provide patients with critical information for use in selecting a hospital setting for their care, ensure hospitals continue to appropriately manage patients' pain, and encourage hospitals to engage in quality improvement efforts addressing pain management and communication. We continue to believe that pain control is a critical part of routine patient care that hospitals should manage and is an important concern for patients, their families, and their caregivers. Therefore, we believe there is continued benefit to publicly reporting the HCAHPS Survey Pain Management questions in other CMS quality programs. As noted previously, we are not aware of any empirical evidence that failing to prescribe opioids lowers a hospital's HCAHPS rates. We also continue to believe that many factors outside the control of CMS quality program requirements may contribute to the perception of a link between the Pain Management dimension and opioid prescribing practices, such as misuse of the survey, disaggregation of surveys results to assess the performance of individual hospital staff, and/or failure to recognize that the HCAHPS Survey excludes certain populations from the sampling frame.

Comment: A number of commenters supported continued collection and public reporting of the current HCAHPS Survey Pain Management questions in the Hospital IQR Program until alternative pain management questions are developed and adopted. Commenters noted that these questions are currently the only source of nationally comparable data on pain management, and stated that the importance of pain management to patient care and experience during a hospital stay makes this information useful for the public. One commenter supported continued collection of these data because hospitals can use the information to improve patient quality of care as new survey questions are developed and tested. One commenter recommended that CMS provide a notation on the publicly reported HCAHPS Survey Pain Management dimension rates, stating that CMS is reviewing the pain management questions for possible revision.

Response: We thank the commenters for their support and note that, in July

[258] 80 FR 49551 through 49552.

[259] L. Tefera, W.G. Lehrman, and P. Conway. ''Measurement of the Patient Experience: Clarifying Facts, Myths, and Approaches.'' *Journal of the American Medical Association.* Published online, 3–10–16. *http://jama.jamanetwork.com/article.aspx?articleid=2503222.*

[260] L. Tefera, W.G. Lehrman, and P. Conway. ''Measurement of the Patient Experience: Clarifying Facts, Myths, and Approaches.'' *Journal of the American Medical Association.* Published online, 3–10–16. *http://jama.jamanetwork.com/article.aspx?articleid=2503222.*

2016, we began displaying a footnote on the *Hospital Compare* Web site along with the Pain Management measure information, which reads: ''Note: CMS is reviewing the pain management questions on the HCAHPS Survey for possible revision.''

After consideration of the public comments we received, we are finalizing our proposal to remove the Pain Management dimension of the HCAHPS Survey in the Patient- and Caregiver-Centered Experience of Care/Care Coordination domain of the Hospital VBP Program beginning with the FY 2018 program year.

XX. Files Available to the Public via the Internet

The Addenda to the OPPS/ASC proposed rules and the final rules with comment period are published and available only via the Internet on the CMS Web site. To view the Addenda to this final rule with comment period pertaining to CY 2017 payments under the OPPS, we refer readers to the CMS Web site at: *http://www.cms.gov/Medicare/Medicare-Fee-for-Service-Payment/HospitalOutpatientPPS/Hospital-Outpatient-Regulations-and-Notices.html;* select ''1656–FC'' from the list of regulations. All OPPS Addenda to this final rule with comment period are contained in the zipped folder entitled ''2017 OPPS 1656-FC Addenda'' at the bottom of the page. To view the Addenda to this final rule with comment period pertaining to the CY 2017 payments under the ASC payment system, we refer readers to the CMS Web site at: *http://www.cms.gov/Medicare/Medicare-Fee-for-Service-Payment/ASCPayment/ASC-Regulations-and-Notices.html;* select ''1656-FC'' from the list of regulations. All ASC Addenda to this final rule with comment period are contained in the zipped folders entitled ''Addendum AA, BB, DD1, DD2, and EE''.

XXI. Collection of Information Requirements

A. Statutory Requirement for Solicitation of Comments

Under the Paperwork Reduction Act of 1995, we are required to provide 60-day notice in the **Federal Register** and solicit public comment before a collection of information requirement is submitted to the Office of Management and Budget (OMB) for review and approval. In order to fairly evaluate whether an information collection should be approved by OMB, section 3506(c)(2)(A) of the Paperwork Reduction Act of 1995 requires that we solicit comment on the following issues:

- The need for the information collection and its usefulness in carrying out the proper functions of our agency.
- The accuracy of our estimate of the information collection burden.
- The quality, utility, and clarity of the information to be collected.
- Recommendations to minimize the information collection burden on the affected public, including automated collection techniques.

In the CY 2017 OPPS/ASC proposed rule (81 FR 45758 through 45761), we solicited public comment on each of these issues for the following sections of this document that contain information collection requirements (ICRs).

B. ICRs for the Hospital OQR Program

1. Background

As we stated in section XIV. of the CY 2012 OPPS/ASC final rule with comment period, the Hospital OQR Program has been generally modeled after the quality data reporting program for the Hospital IQR Program (76 FR 74451). We refer readers to the CY 2011 through CY 2016 OPPS/ASC final rules with comment periods (75 FR 72111 through 72114; 76 FR 74549 through 74554; 77 FR 68527 through 68532; 78 FR 75170 through 75172; 79 FR 67012 through 67015; and 80 FR 70580 through 70582, respectively) for detailed discussions of Hospital OQR Program information collection requirements we have previously finalized. The information collection requirements associated with the Hospital OQR Program are currently approved under OMB control number 0938–1109.

Below we discuss only the changes in burden resulting from the provisions in this final rule with comment period.

2. Estimated Burden of Hospital OQR Program Newly Finalized Proposals for the CY 2018 Payment Determination and Subsequent Years

In section XIII.B.8. of this final rule with comment period, we are finalizing our proposal to publicly display data on the *Hospital Compare* Web site, or other CMS Web site, as soon as possible after measure data have been submitted to CMS. In addition, we are finalizing our proposal that hospitals will generally have approximately 30 days to preview their data. Both of these policies are consistent with current practice. Lastly, we are finalizing our proposal to announce the timeframes for the preview period starting with the CY 2018 payment determination on a CMS Web site and/or on our applicable listservs. We do not anticipate additional burden to hospitals as a result of these changes to the public display policies because hospitals will not be required to submit additional data or forms to CMS.

3. Estimated Burden of Hospital OQR Program Newly Finalized Proposals for the CY 2019 Payment Determination and Subsequent Years

a. Extraordinary Circumstances Extension or Exemptions Process

In section XIII.D.8. of this final rule with comment period, we are finalizing our proposal to extend the submission deadline for requests under our ''Extraordinary Circumstances Extension or Exemptions'' (ECE) process from 45 days from the date that the extraordinary circumstance occurred to 90 days from the date that the extraordinary circumstance occurred. For a complete discussion of our ECE process under the Hospital OQR Program, we refer readers to the CY 2013 OPPS/ASC final rule with comment period (77 FR 68489), the CY 2014 OPPS/ASC final rule with comment period (78 FR 75119 through 75120), the CY 2015 OPPS/ASC final rule with comment period (79 FR 66966), and the CY 2016 OPPS/ASC final rule with comment period (80 FR 70524).

We believe that the updates to the ECE deadlines will have no effect on burden for hospitals, because we are not making any changes that will increase the amount of time necessary to complete the form. We do not anticipate that there will be any additional burden as the materials to be submitted related to an ECE request are unchanged and the deadline does not result in a change in time necessary to submit an extension or exemption request. The burden associated with submitting an Extraordinary Circumstances Extension/Exemption Request is accounted for in OMB Control Number 0938–1022.

b. Reconsideration and Appeals

In section XIII.D.9. of this final rule with comment period, we are finalizing a clarification to our reconsideration and appeals procedures. While there is a burden associated with filing a reconsideration request, 5 CFR 1320.4 of OMB's implementing regulations for the Paperwork Reduction Act of 1995 excludes collection activities during the conduct of administrative actions such as reconsiderations.

4. Estimated Burden of Hospital OQR Program Newly Finalized Proposals for the CY 2020 Payment Determination and Subsequent Years

In sections XIII.B.5.a. and XIII.B.5.b. of this final rule with comment period, we are finalizing our proposals to add

two new claims-based measures for the CY 2020 payment determination and subsequent years: (1) OP–35: Admissions and Emergency Department Visits for Patients Receiving Outpatient Chemotherapy; and (2) OP–36: Hospital Visits after Hospital Outpatient Surgery (NQF #2687). In section XIII.B.5.c. of this final rule with comment period, we also are finalizing our proposal to add five new Outpatient and Ambulatory Surgery Consumer Assessment of Healthcare Providers and Systems (OAS CAHPS) Survey-based measures for the CY 2020 payment determination and subsequent years: (1) OP–37a: OAS CAHPS—About Facilities and Staff; (2) OP–37b: OAS CAHPS—Communication About Procedure; (3) OP–37c: OAS CAHPS—Preparation for Discharge and Recovery; (4) OP–37d: OAS CAHPS—Overall Rating of Facility; and (5) OP–37e: OAS CAHPS—Recommendation of Facility.

OP–35 and OP–36 are claims-based measures. As noted in the CY 2013 OPPS/ASC final rule with comment period (77 FR 68530), we calculate claims-based measures using Medicare FFS claims data that do not require additional hospital data submissions. As a result, as we stated in the CY 2017 OPPS/ASC proposed rule (81 FR 45758), we do not anticipate that the proposed OP–35 or OP–36 measures will create any additional burden to hospital outpatient departments for the CY 2020 payment determination and subsequent years.

The information collection requirements associated with the five newly adopted OAS CAHPS survey-based measures (OP–37a, OP–37b, OP–37c, OP–37d, and OP–37e) are currently approved under OMB Control Number 0938–1240. For this reason, in the CY 2017 OPPS/ASC proposed rule (81 FR 45758), we did not provide an independent estimate of the burden associated with OAS CAHPS Survey-based measures for the Hospital OQR Program.

We invited public comment on the burden associated with these information collection requirements. We did not receive any public comments on our estimates of the burden associated with these information collection requirements. Therefore, we are finalizing our burden estimates as discussed above.

C. ICRs for the ASCQR Program

1. Background

We refer readers to the CY 2012 OPPS/ASC final rule with comment period (76 FR 74554), the FY 2013 IPPS/LTCH PPS final rule (77 FR 53672), and the CY 2013, CY 2014, CY 2015 and CY 2016 OPPS/ASC final rules with comment periods (77 FR 68532 through 68533; 78 FR 75172 through 75174; 79 FR 67015 through 67016; and 80 FR 70582 through 70584, respectively) for detailed discussions of the ASCQR Program information collection requirements we have previously finalized. The information collection requirements associated with the ASCQR Program are currently approved under OMB control number 0938–1270.

Below we discuss only the changes in burden that would result from the provisions in this final rule with comment period.

2. Changes in Burden Calculation for the ASCQR Program

To better align this program with our other quality reporting and value-based purchasing programs, we are finalizing our proposal to update our burden calculation methodology to standardize elements within our burden calculation. Specifically, we are finalizing our proposals to utilize: (1) A standard estimate of the time required for abstracting chart data for measures based on historical data from other quality reporting programs; and (2) a standard hourly labor cost for chart abstraction activities.

a. Estimate of Time Required to Chart-Abstract Data

In the past, we have used 35 minutes as the time required to chart-abstract and report data for each chart-abstracted Web-based measure in the ASCQR Program (76 FR 74554). However, we have studied other programs' estimates for this purpose and believe that 15 minutes is a more reasonable number. Specifically, the Hospital IQR Program possesses historical data from its data validation contractor. This contractor chart-abstracts each measure set when charts are sent to CMS for validation. Based on this contractor's validation activities, we believe that the average time required to chart-abstract data for each measure is approximately 15 minutes. We believe that this estimate is reasonable because the ASCQR Program uses measures similar to those of the Hospital IQR Program, such as the surgery safety measures and immunization measures. Accordingly, in the CY 2017 OPPS/ASC proposed rule (81 FR 45759), we proposed to use 15 minutes in calculating the time required to chart-abstract data, unless we have historical data that indicate that this approximation is not accurate.

b. Hourly Labor Cost

Previously, we used $30 as our hourly labor cost in calculating the burden associated with chart-abstraction activities. This labor cost is different from those used in other quality reporting and value-based purchasing programs, and we do not believe there is a justification for these different numbers given the similarity in quality measures and required staff. Therefore, in the CY 2017 OPPS/ASC proposed rule (81 FR 45759), we proposed to align these numbers and use one hourly labor cost across programs for purposes of burden calculations. Specifically, we proposed to use an hourly labor cost (hourly wage plus fringe and overhead, as discussed below) of $32.84. This labor cost is based on the Bureau of Labor Statistics (BLS) wage for a Medical Records and Health Information Technician. The BLS is ''the principal Federal agency responsible for measuring labor market activity, working conditions, and price changes in the economy.'' [261] Acting as an independent agency, the BLS provides objective information for not only the government, but also for the public. The BLS describes Medical Records and Health Information Technicians as those responsible for organizing and managing health information data. Therefore, we believe it is reasonable to assume that these individuals will be tasked with abstracting clinical data for these measures. According to the BLS, the median pay for Medical Records and Health Information Technicians is $16.42 per hour.[262]

However, obtaining data on other overhead costs is challenging because overhead costs may vary greatly across ASCs. In addition, the precise cost elements assigned as ''indirect'' or ''overhead'' costs, as opposed to direct costs or employee wages, are subject to some interpretation at the facility level. Therefore, in the CY 2017 OPPS/ASC proposed rule (81 FR 45759), we proposed to calculate the cost of overhead at 100 percent of the mean hourly wage. This is necessarily a rough adjustment, both because fringe benefits and overhead costs vary significantly from employer to employer. Nonetheless, there is no practical alternative, and we believe that doubling the hourly wage to estimate total cost is a reasonably accurate estimation method. We note that in the FY 2017 IPPS/LTCH PPS final rule (81 FR 57260, 57266, and 57339), we used

[261] *http://www.bls.gov/bls/infohome.htm.*

[262] *http://www.bls.gov/ooh/healthcare/medical-records-and-health-information-technicians.htm.*

a similar adjustment for a couple other quality reporting programs. Therefore, we proposed to apply an hourly labor cost of $32.84 ($16.42 base salary + $16.42 fringe and overhead) to our burden calculations.

We did not receive any public comments on our proposals to utilize: (1) A standard estimate of the time required for abstracting chart data for measures based on historical data from other quality reporting programs, specifically, 15 minutes; and (2) a standard hourly labor cost for chart abstraction activities, specifically, $32.84. Therefore, we are finalizing our proposals as proposed.

3. Estimated Burden of ASCQR Program Newly Finalized Proposals for the CY 2018 Payment Determination

For the CY 2018 payment determination and subsequent years, we are finalizing a few proposals. In section XIV.B.7 of this final rule with comment period, we are finalizing our proposal to publicly display data on the *Hospital Compare* Web site, or other CMS Web site, as soon as possible after measure data have been submitted to CMS. In addition, we are finalizing our proposal that ASCs will generally have approximately 30 days to preview their data. Both of these finalized proposals are consistent with current practice. Lastly, we are finalizing our proposal to announce the timeframes for the preview period starting with the CY 2018 payment determination on a CMS Web site and/or on our applicable listservs. We believe that these finalized changes to the ASCQR Program public reporting policies will have no effect on burden for ASCs because these changes will not require participating ASCs to submit additional data to CMS.

4. Estimated Burden of ASCQR Program Newly Finalized Proposals for the CY 2019 Payment Determination

For the CY 2019 payment determination and subsequent years, we are finalizing two new proposals. In section XIV.D.3. of this final rule with comment period, we are finalizing our proposal to implement a submission deadline with an end date of May 15 for all data submitted via a CMS Web-based tool beginning with the CY 2019 payment determination as proposed. (For all data submitted via a non-CMS Web-based tool, ASCs are already required to submit by May 15 of the year prior to the affected payment determination year (79 FR 66985 through 66986).) We do not anticipate additional burden as the data collection and submission requirements have not changed; only the deadline will be moved to a slightly earlier date that we anticipate will alleviate burden by aligning data submission deadlines. We also are finalizing our proposal to make corresponding changes to the regulations at 42 CFR 416.310(c)(1)(ii) to reflect this change in submission deadline, as proposed. We do not anticipate any additional burden to ASCs as a result of codifying this policy.

In addition, in section XIV.D.6. of this final rule with comment period, we are finalizing our proposal to extend the time for filing an Extraordinary Circumstance Exception or Exemption from within 45 days of the date that the extraordinary circumstance occurred to within 90 days of the date that the extraordinary circumstance occurred as proposed. We do not anticipate that there will be any additional burden as the materials to be submitted are unchanged and the deadline does not result in reduced time to submit an extension or exemption. We also are finalizing our proposal to make corresponding changes to the regulations at 42 CFR 416.310(d)(1) to reflect this change to 90 days, as proposed. We do not anticipate any additional burden to ASCs as a result of codifying this policy.

5. Estimated Burden of ASCQR Program Newly Finalized Proposals for the CY 2020 Payment Determination

For the CY 2020 payment determination and subsequent years, we are finalizing our proposals to add two new measures collected via a CMS online data submission tool and five survey-based measures to the ASCQR Program measure set. In section XIV.B.4. of this final rule with comment period, we are finalizing our proposals, as proposed, to add the following measures collected via a CMS online data submission tool: ASC–13: Normothermia Outcome and ASC–14: Unplanned Anterior Vitrectomy. In the same section, we are finalizing our proposals to adopt the following survey-based measures: (1) ASC–15a: OAS CAHPS—About Facilities and Staff; (2) ASC–15b: OAS CAHPS—Communication About Procedure; (3) ASC–15c: OAS CAHPS—Preparation for Discharge and Recovery; (4) ASC–15d: OAS CAHPS—Overall Rating of Facility; and (5) ASC–15e: OAS CAHPS—Recommendation of Facility.

We believe ASCs will incur a financial burden associated with abstracting numerators, denominators, and exclusions for the two newly adopted measures collected and reported via a CMS online data submission tool (ASC–13 and ASC–14). Using the burden estimate values for chart-abstracted measures discussed in section XXI.C.2. of this final rule with comment period, we estimate that each participating ASC will spend 15 minutes per case to collect and submit the data, making the total estimated burden for all ASCs with a single case per ASC of 1,315 hours (5,260 ASCs × 0.25 hours per case per ASC), and 82,845 hours for each measure across all ASCs based on a historic average of 63 cases. Therefore, we estimate that the reporting burden for all ASCs with a single case per ASC for newly finalized ASC–13 and ASC–14 will be 1,315 hours and $43,185 [263] (1,315 hours × $32.84 per hour), and 82,845 hours (1,315 × 63 cases) and $2,720,630 (82,845 hours × $32.84 per hour) for each measure across all ASCs based on an historic average of 63 cases for the CY 2020 payment determination. The additional burden associated with these requirements is available for review and comment under OMB Control Number 0938–1270.

The information collection requirements associated with the five newly adopted OAS CAHPS Survey-based measures (ASC–15a, ASC–15b, ASC–15c, ASC–15d, and ASC–15e) are currently approved under OMB Control Number 0938–1240. For this reason, in the CY 2017 OPPS/ASC proposed rule (81 FR 45760), we did not provide an independent estimate of the burden associated with OAS CAHPS Survey administration for the ASCQR Program.

6. Reconsideration

For a complete discussion of the ASCQR Program's reconsideration processes, we refer readers to the FY 2013 IPPS/LTCH PPS final rule (77 FR 53643 through 53644), the CY 2014 OPPS/ASC final rule with comment period (78 FR 75141), and the CY 2016 final rule with comment period (80 FR 75141). In the CY 2017 OPPS/ASC proposed rule, we did not propose any changes to this process.

While there is burden associated with filing a reconsideration request, 5 CFR 1320.4 of OMB's implementing regulations for the Paperwork Reduction Act of 1995 excludes collection activities during the conduct of administrative actions such as reconsiderations.

We invited public comment on the burden associated with these information collection requirements. We did not receive any public comments on

[263] We note that in the CY 2017 OPPS/ASC proposed rule (81 FR 45760) this value appeared as $42,185. This was a typographical error; the correct value for this burden estimate is $43,185, the product of 1,315 hours multiplied by $32.84 per hour.

our estimates of the burden associated with these information collection requirements. Therefore, we are finalizing our burden estimates as discussed above.

D. ICRs Relating to Changes in Transplant Enforcement Performance Thresholds

In section XV. of this final rule with comment period, we discuss changes to the enforcement performance thresholds relating to patient and graft survival outcomes. The changes will impose no new burdens on transplant programs. The changes do not impose any new information collection or recordkeeping requirements. Consequently, review by the Office of Management and Budget under the authority of the Paperwork Reduction Act of 1995 is not required.

E. ICRs for Changes Relating to Organ Procurement Organizations (OPOs)

In section XVI. of this final rule with comment period, we are finalizing several proposed changes to definitions, outcome measures and documentation requirements for OPOs. In section XVI.B.1. of this final rule with comment period, we are revising the definition of ''eligible death.'' In section XVI.B.2 of this final rule with comment period, we are finalizing our proposal to adjust the outcome performance yield measure to align CMS with the SRTR yield metric. In section XVI.B.3. of this final rule with comment period, we are finalizing our proposal to reduce the amount of hard copy documentation that is packaged and shipped with each organ. These finalized changes do not impose any new information collection or recordkeeping requirements. Consequently, review by the Office of Management and Budget under the authority of the Paperwork Reduction Act of 1995 is not required.

Finally, in section XVII. of this final rule with comment period, we are finalizing our proposal to make a technical correction to the enforcement provisions for transplant centers and to clarify our policy regarding SIAs. These changes do not impose information collection and recordkeeping requirements. Consequently, review by the Office of Management and Budget under the authority of the Paperwork Reduction Act of 1995 is not required.

F. ICRs Relating to Changes to the Electronic Health Record (EHR) Incentive Program

In section XVIII. of this final rule with comment period, we discuss our proposed and finalized policy changes for eligible hospitals and CAHs attesting to CMS for Modified Stage 2 and Stage 3 to eliminate the Clinical Decision Support (CDS) and Computerized Provider Order Entry (CPOE) objectives and measures and reduce the reporting thresholds for a subset of the remaining objectives and measures, generally to the Modified Stage 2 thresholds. We believe that there will be a reduction in burden by not reporting for the CDS (1 minute) and CPOE (10 minutes) objectives and measures. This will reduce the total burden associated with these measures by a total of 11 minutes. This will reduce the time to attest to objectives and measures for Modified Stage 2 (495.22) from 6 hours and 48 minutes to 6 hours and 37 minutes and for the Stage 3 from 6 hours and 52 minutes to 6 hours and 41 minutes. We refer readers to the 2015 EHR Incentive Programs Final Rule for the detailed analysis of the burden associated with the objectives and measures (80 FR 62916 through 62924).

While we do believe that eliminating requirements will decrease the associated information collection burden, we believe that the reduction detailed below falls within an acceptable margin of error, and therefore we will not be revising the information collection request currently approved under 0938–1158.

We discuss our proposed and finalized policies to change the EHR reporting period in 2016 and 2017 from the full calendar year to any continuous 90-day period within the calendar year for all returning EPs, eligible hospitals and CAHs in the Medicare and Medicaid EHR Incentive Programs; require new participants in 2017 who are seeking to avoid the 2018 payment adjustment by attestation by October 1, 2017 to attest to the Modified Stage 2 objectives and measures. We do not believe that modifying the EHR reporting period will cause an increase in burden as the reporting requirements for a 90 day reporting period are the same for a full calendar year reporting period. Instead, the burden is associated with data capture and measure calculations on the objectives and measures not the reporting period to which one will attest for.

We discuss our proposed and finalized policy changes to allow for a one-time significant hardship exception from the 2018 payment adjustment for certain EPs who are new participants in the EHR Incentive Program in 2017 and are transitioning to MIPS in 2017. The hardship exception process involves participants completing an application form for an exception. While the form is standardized, we believe it is exempt from the PRA. The form is structured as an attestation. Therefore, we believe it is exempt under 5 CFR 1320.3(h)(1) of the implementing regulations of the PRA. The form is an attestation that imposes no burden beyond what is required to provide identifying information and to attest to the applicable information.

G. ICRs Relating to Additional Hospital VBP Program Policies

In section XIX. of this final rule with comment period, we discuss finalizing our proposal to change the scoring methodology for the Patient- and Caregiver-Centered Experience of Care/Care Coordination domain in the Hospital VBP Program by removing the HCAHPS Pain Management dimension. As required under section 1886(o)(2)(A) of the Act, the HCAHPS Survey is used in the Hospital IQR Program. Therefore, the removal of the Pain Management dimension from the survey for purposes of the Hospital VBP Program does not change the reporting burden for hospitals because the data will still be used for the Hospital IQR Program. The finalized change to the scoring methodology for the Patient- and Caregiver-Centered Experience of Care/Care Coordination domain in the Hospital VBP Program also will not result in any change to the reporting burden.

H. ICRs for Payment for Off-Campus Provider-Based Departments Policy Changes for CY 2017

In section X.A. of this final rule with comment period, we discuss finalized proposals for the implementation of section 603 of the Bipartisan Budget Act of 2015. The finalized proposals will impose no new information collection requirements for CY 2017. Consequently, review by the Office of Management and Budget under the authority of the Paperwork Reduction Act of 1995 is not required.

Any public comments on estimates of the burden associated with implementation of section 603 of the Bipartisan Budget Act of 2015 are summarized and addressed in section X.A. of this final rule with comment period.

XXII. Waiver of Proposed Rulemaking and Response to Comments

A. Waiver of Proposed Rulemaking

We ordinarily publish a notice of proposed rulemaking in the **Federal Register** and invite public comment on a proposed rule. The notice of proposed rulemaking includes a reference to the legal authority under which the rule is proposed, and the terms and substance of the proposed rule or a description of the subjects and issues involved. This

procedure can be waived, however, if an agency finds good cause that a notice-and-comment procedure is impracticable, unnecessary, or contrary to the public interest and incorporates a statement of the finding and its reasons in the rule issued.

We utilize HCPCS codes for Medicare payment purposes. The HCPCS is a national coding system comprised of Level I codes (CPT codes) and Level II codes that are intended to provide uniformity to coding procedures, services, and supplies across all types of medical providers and suppliers. CPT codes are copyrighted by the AMA and consist of several categories, including Category I codes which are 5-digit numeric codes, and Category III codes which are temporary codes to track emerging technology, services, and procedures. The AMA issues an annual update of the CPT code set each Fall, with January 1 as the effective date for implementing the updated CPT codes. The HCPCS codes, including both CPT codes and Level II codes, are similarly updated annually on a calendar year basis. Annual Level II coding changes are not available to the public until the Fall immediately preceding the annual January update of the OPPS and the ASC payment system. Because of the timing of the release of these new codes, it is impracticable for us to provide prior notice and solicit comment on the Level II codes and the payments assigned to them in advance of publication of the final rule that implements the OPPS and the ASC payment system. However, it is imperative that these coding changes be accounted for and recognized timely under the OPPS and the ASC payment system for payment because services represented by these codes will be provided to Medicare beneficiaries in hospital outpatient departments and ASCs during the calendar year in which they become effective. Moreover, regulations implementing the HIPAA (42 CFR parts 160 and 162) require that the HCPCS codes be used to report health care services, including services paid under the OPPS and the ASC payment system. We assign interim payment amounts and status indicators to any new codes according to our assessment of the most appropriate APC based on clinical and resource homogeneity with other procedures and services in the APC. If we did not assign payment amounts to new codes on an interim basis, the alternative would be to not pay for these services during the initial calendar year in which the codes become effective. We believe it would be contrary to the public interest to delay establishment of payment amounts for these codes.

Therefore, we find good cause to waive the notice of proposed rulemaking for the establishment of payment amounts for selected HCPCS codes identified with comment indicator ''NI'' in Addendum B and Addendum BB to this final rule with comment period. We are providing a 60-day public comment period.

B. Response to Comments

Because of the large number of public comments we normally receive on **Federal Register** documents, we are not able to acknowledge or respond to them individually. We will consider all comments we receive by the date and time specified in the **DATES** section of this final rule with comment period, and, when we proceed with a subsequent document(s), we will respond to those comments in the preamble to that document.

XXIII. Economic Analyses

A. Regulatory Impact Analysis

1. Introduction

We have examined the impacts of this final rule with comment period, as required by Executive Order 12866 on Regulatory Planning and Review (September 30, 1993), Executive Order 13563 on Improving Regulation and Regulatory Review (January 18, 2011), the Regulatory Flexibility Act (RFA) (September 19, 1980, Pub. L. 96–354), section 1102(b) of the Social Security Act, section 202 of the Unfunded Mandates Reform Act of 1995 (UMRA) (March 22, 1995, Pub. L. 104–4), Executive Order 13132 on Federalism (August 4, 1999), and the Contract with America Advancement Act of 1996 (Pub. L. 104–121) (5 U.S.C. 804(2)). This section of the final rule with comment period contains the impact and other economic analyses for the provisions that we are finalizing for CY 2017.

Executive Orders 12866 and 13563 direct agencies to assess all costs and benefits of available regulatory alternatives and, if regulation is necessary, to select regulatory approaches that maximize net benefits (including potential economic, environmental, public health and safety effects, distributive impacts, and equity). Executive Order 13563 emphasizes the importance of quantifying both costs and benefits, of reducing costs, of harmonizing rules, and of promoting flexibility. This final rule with comment period has been designated as an economically significant rule under section 3(f)(1) of Executive Order 12866 and a major rule under the Contract with America Advancement Act of 1996 (Pub. L. 104–121). Accordingly, this final rule with comment period has been reviewed by the Office of Management and Budget. We have prepared a regulatory impact analysis that, to the best of our ability, presents the costs and benefits of this final rule with comment period. In the CY 2017 OPPS/ASC proposed rule (81 FR 45761), we solicited public comments on the regulatory impact analysis in the proposed rule, and we are addressing any public comments we received in this final rule with comment period as appropriate.

2. Statement of Need

This final rule with comment period is necessary to make updates to the Medicare hospital OPPS rates. It is necessary to make changes to the payment policies and rates for outpatient services furnished by hospitals and CMHCs in CY 2017. We are required under section 1833(t)(3)(C)(ii) of the Act to update annually the OPPS conversion factor used to determine the payment rates for APCs. We also are required under section 1833(t)(9)(A) of the Act to review, not less often than annually, and revise the groups, the relative payment weights, and the wage and other adjustments described in section 1833(t)(2) of the Act. We must review the clinical integrity of payment groups and relative payment weights at least annually. We are revising the APC relative payment weights using claims data for services furnished on and after January 1, 2015, through and including December 31, 2015, and processed through June 30, 2016, and updated cost report information.

This final rule with comment period also is necessary to make updates to the ASC payment rates for CY 2017, enabling CMS to make changes to payment policies and payment rates for covered surgical procedures and covered ancillary services that are performed in an ASC in CY 2017. Because ASC payment rates are based on the OPPS relative payment weights for the majority of the procedures performed in ASCs, the ASC payment rates are updated annually to reflect annual changes to the OPPS relative payment weights. In addition, we are required under section 1833(i)(1) of the Act to review and update the list of surgical procedures that can be performed in an ASC not less frequently than every 2 years.

3. Overall Impacts for the OPPS and ASC Payment Provisions

We estimate that the total increase in Federal government expenditures under the OPPS for CY 2017, compared to CY 2016 due to the changes in this final rule with comment period, will be approximately $773 million. Taking into account our estimated changes in enrollment, utilization, and case-mix, we estimate that the OPPS expenditures for CY 2017 will be approximately $5.0 billion higher relative to expenditures in CY 2016. We note that this estimate of $5.0 billion does not include the implementation of section 603 of the Bipartisan Budget Act of 2015 in CY 2017, which we estimate will reduce Part B expenditures by $50 million in CY 2017. Because this final rule with comment period is economically significant as measured by the threshold of an additional $100 million in expenditures in 1 year, we have prepared this regulatory impact analysis that, to the best of our ability, presents its costs and benefits. Table 52 displays the distributional impact of the CY 2017 changes in OPPS payment to various groups of hospitals and for CMHCs.

We estimate that the update to the conversion factor and other adjustments (not including the effects of outlier payments, the pass-through estimates, and the application of the frontier State wage adjustment for CY 2016) will increase total OPPS payments by 1.7 percent in CY 2017. The changes to the APC relative payment weights, the changes to the wage indexes, the continuation of a payment adjustment for rural SCHs, including EACHs, and the payment adjustment for cancer hospitals will not increase OPPS payments because these changes to the OPPS are budget neutral. However, these updates will change the distribution of payments within the budget neutral system. We estimate that the total change in payments between CY 2016 and CY 2017, considering all payments, changes in estimated total outlier payments, pass-through payments, and the application of the frontier State wage adjustment outside of budget neutrality, in addition to the application of the OPD fee schedule increase factor after all adjustments required by sections 1833(t)(3)(F), 1833(t)(3)(G), and 1833(t)(17) of the Act, will increase total estimated OPPS payments by 1.7 percent.

We estimate the total increase (from changes to the ASC provisions in this final rule with comment period as well as from enrollment, utilization, and case-mix changes) in Medicare expenditures under the ASC payment system for CY 2017 compared to CY 2016 to be approximately $177 million. Because the provisions for the ASC payment system are part of a final rule that is economically significant as measured by the $100 million threshold, we have prepared a regulatory impact analysis of the changes to the ASC payment system that, to the best of our ability, presents the costs and benefits of this portion of this final rule with comment period. Table 53 and 54 of this final rule with comment period display the redistributive impact of the CY 2017 changes regarding ASC payments, grouped by specialty area and then grouped by procedures with the greatest ASC expenditures, respectively.

4. Detailed Economic Analyses

a. Estimated Effects of OPPS Changes in This Final Rule With Comment Period

(1) Limitations of Our Analysis

The distributional impacts presented here are the projected effects of the CY 2017 policy changes on various hospital groups. We post on the CMS Web site our hospital-specific estimated payments for CY 2017 with the other supporting documentation for this final rule with comment period. To view the hospital-specific estimates, we refer readers to the CMS Web site at: *http://www.cms.gov/Medicare/Medicare-Fee-for-Service-Payment/HospitalOutpatientPPS/index.html.* At the Web site, select ''regulations and notices'' from the left side of the page and then select ''CMS–1656–FC'' from the list of regulations and notices. The hospital-specific file layout and the hospital-specific file are listed with the other supporting documentation for this final rule with comment period. We show hospital-specific data only for hospitals whose claims were used for modeling the impacts shown in Table 52 below. We do not show hospital-specific impacts for hospitals whose claims we were unable to use. We refer readers to section II.A. of this final rule with comment period for a discussion of the hospitals whose claims we do not use for ratesetting and impact purposes.

We estimate the effects of the individual policy changes by estimating payments per service, while holding all other payment policies constant. We use the best data available, but do not attempt to predict behavioral responses to our policy changes. In addition, we have not made adjustments for future changes in variables such as service volume, service-mix, or number of encounters.

In the CY 2017 OPPS/ASC proposed rule (81 FR 45762), we solicited public comment and information about the anticipated effects of the proposed changes included in the proposed rule on providers and our methodology for estimating them. Any public comments that we receive are addressed in the applicable sections of this final rule with comment period that discuss the specific policies.

(2) Estimated Effects of OPPS Changes on Hospitals

Table U1 below shows the estimated impact of this final rule with comment period on hospitals. Historically, the first line of the impact table, which estimates the change in payments to all facilities, has always included cancer and children's hospitals, which are held harmless to their pre-BBA amount. We also include CMHCs in the first line that includes all providers. We now include a second line for all hospitals, excluding permanently held harmless hospitals and CMHCs.

We present separate impacts for CMHCs in Table 52, and we discuss them separately below, because CMHCs are paid only for partial hospitalization services under the OPPS and are a different provider type from hospitals. In CY 2017, we are paying CMHCs for partial hospitalization services under only one APC 5853 (Partial Hospitalization for CMHCs), and we are paying hospitals for partial hospitalization services under only one APC 5863 (Partial Hospitalization for Hospital-Based PHPs).

The estimated increase in the total payments made under the OPPS is determined largely by the increase to the conversion factor under the statutory methodology. The distributional impacts presented do not include assumptions about changes in volume and service-mix. The conversion factor is updated annually by the OPD fee schedule increase factor as discussed in detail in section II.B. of this final rule with comment period. Section 1833(t)(3)(C)(iv) of the Act provides that the OPD fee schedule increase factor is equal to the market basket percentage increase applicable under section 1886(b)(3)(B)(iii) of the Act, which we refer to as the IPPS market basket percentage increase. The IPPS market basket percentage increase for FY 2017 is 2.7 percent (81 FR 56938). Section 1833(t)(3)(F)(i) of the Act reduces that 2.7 percent by the multifactor productivity adjustment described in section 1886(b)(3)(B)(xi)(II) of the Act, which is 0.3 percentage point for FY 2017 (which is also the MFP adjustment for FY 2017 in the FY 2017 IPPS/LTCH PPS final rule (81 FR 56939)), and sections 1833(t)(3)(F)(ii) and 1833(t)(3)(G)(v) of the Act further

reduce the market basket percentage increase by 0.75 percentage point, resulting in the OPD fee schedule increase factor of 1.65 percent. We are using the OPD fee schedule increase factor of 1.65 percent in the calculation of the CY 2017 OPPS conversion factor. Section 10324 of the Affordable Care Act, as amended by HCERA, further authorized additional expenditures outside budget neutrality for hospitals in certain frontier States that have a wage index less than 1.0000. The amounts attributable to this frontier State wage index adjustment are incorporated in the CY 2017 estimates in Table 52.

To illustrate the impact of the CY 2017 changes, our analysis begins with a baseline simulation model that uses the CY 2016 relative payment weights, the FY 2016 final IPPS wage indexes that include reclassifications, and the final CY 2016 conversion factor. Table 52 shows the estimated redistribution of the increase or decrease in payments for CY 2017 over CY 2016 payments to hospitals and CMHCs as a result of the following factors: the impact of the APC reconfiguration and recalibration changes between CY 2016 and CY 2017 (Column 2); the wage indexes and the provider adjustments (Column 3); the combined impact of all of the changes described in the preceding columns plus the 1.65 percent OPD fee schedule increase factor update to the conversion factor; and the estimated impact taking into account all payments for CY 2017 relative to all payments for CY 2016, including the impact of changes in estimated outlier payments, the frontier State wage adjustment, and changes to the pass-through payment estimate (Column 5).

We did not model an explicit budget neutrality adjustment for the rural adjustment for SCHs because we are maintaining the current adjustment percentage for CY 2017. Because the updates to the conversion factor (including the update of the OPD fee schedule increase factor), the estimated cost of the rural adjustment, and the estimated cost of projected pass-through payment for CY 2017 are applied uniformly across services, observed redistributions of payments in the impact table for hospitals largely depend on the mix of services furnished by a hospital (for example, how the APCs for the hospital's most frequently furnished services will change), and the impact of the wage index changes on the hospital. However, total payments made under this system and the extent to which this final rule with comment period will redistribute money during implementation also will depend on changes in volume, practice patterns, and the mix of services billed between CY 2016 and CY 2017 by various groups of hospitals, which CMS cannot forecast.

Overall, we estimate that the rates for CY 2017 will increase Medicare OPPS payments by an estimated 1.7 percent. Removing payments to cancer and children's hospitals because their payments are held harmless to the pre-OPPS ratio between payment and cost and removing payments to CMHCs results in an estimated 1.8 percent increase in Medicare payments to all other hospitals. These estimated payments will not significantly impact other providers.

Column 1: Total Number of Hospitals

The first line in Column 1 in Table U1 shows the total number of facilities (3,906), including designated cancer and children's hospitals and CMHCs, for which we were able to use CY 2015 hospital outpatient and CMHC claims data to model CY 2016 and CY 2017 payments, by classes of hospitals, for CMHCs and for dedicated cancer hospitals. We excluded all hospitals and CMHCs for which we could not plausibly estimate CY 2016 or CY 2017 payment and entities that are not paid under the OPPS. The latter entities include CAHs, all-inclusive hospitals, and hospitals located in Guam, the U.S. Virgin Islands, Northern Mariana Islands, American Samoa, and the State of Maryland. This process is discussed in greater detail in section II.A. of this final rule with comment period. At this time, we are unable to calculate a disproportionate share hospital (DSH) variable for hospitals that are not also paid under the IPPS because DSH payments are only made to hospitals paid under the IPPS. Hospitals for which we do not have a DSH variable are grouped separately and generally include freestanding psychiatric hospitals, rehabilitation hospitals, and long-term care hospitals. We show the total number of OPPS hospitals (3,789), excluding the hold-harmless cancer and children's hospitals and CMHCs, on the second line of the table. We excluded cancer and children's hospitals because section 1833(t)(7)(D) of the Act permanently holds harmless cancer hospitals and children's hospitals to their ''pre-BBA amount'' as specified under the terms of the statute, and therefore, we removed them from our impact analyses. We show the isolated impact on the 50 CMHCs at the bottom of the impact table and discuss that impact separately below.

Column 2: APC Recalibration—All Changes

Column 2 shows the estimated effect of APC recalibration. Column 2 also reflects any changes in multiple procedure discount patterns or conditional packaging that occur as a result of the changes in the relative magnitude of payment weights. As a result of APC recalibration, we estimate that urban hospitals will experience no change, with the impact ranging from an increase of 0.2 percent to a decrease of 0.3 percent, depending on the number of beds. Rural hospitals will experience a 0.2 percent increase, with the impact ranging from an increase of 0.1 percent to 0.3 percent, depending on the number of beds. Major teaching hospitals will experience a decrease of 0.2 percent overall.

Column 3: Wage Indexes and the Effect of the Final Provider Adjustments

Column 3 demonstrates the combined budget neutral impact of the APC recalibration; the updates for the wage indexes with the FY 2017 IPPS post-reclassification wage indexes; the rural adjustment; and the cancer hospital payment adjustment. We modeled the independent effect of the budget neutrality adjustments and the OPD fee schedule increase factor by using the relative payment weights and wage indexes for each year, and using a CY 2016 conversion factor that included the OPD fee schedule increase and a budget neutrality adjustment for differences in wage indexes.

Column 3 reflects the independent effects of the updated wage indexes, including the application of budget neutrality for the rural floor policy on a nationwide basis. This column excludes the effects of the frontier State wage index adjustment, which is not budget neutral and is included in Column 5. We did not model a budget neutrality adjustment for the rural adjustment for SCHs because we are continuing the rural payment adjustment of 7.1 percent to rural SCHs for CY 2017, as described in section II.E. of this final rule with comment period.

We modeled the independent effect of updating the wage indexes by varying only the wage indexes, holding APC relative payment weights, service-mix, and the rural adjustment constant and using the CY 2017 scaled weights and a CY 2016 conversion factor that included a budget neutrality adjustment for the effect of the changes to the wage indexes between CY 2016 and CY 2017. The FY 2017 wage policy results in modest redistributions.

There is a slight increase of less than 0.1 in Column 3 for the CY 2017 cancer hospital payment adjustment budget neutrality calculation, because we are using a payment-to-cost ratio target for the cancer hospital payment adjustment in CY 2017 of 0.91, compared to the CY 2016 OPPS/ASC final rule with comment period (80 FR 70362 through 70363) payment-to-cost ratio target of 0.92.

Column 4: All Budget Neutrality Changes Combined With the Market Basket Update

Column 4 demonstrates the combined impact of all of the changes previously described and the update to the conversion factor of 1.65 percent. Overall, these changes will increase payments to urban hospitals by 1.7 percent and to rural hospitals by 2.2 percent. Most classes of hospitals will receive an increase in line with the 1.7 percent overall increase after the update is applied to the budget neutrality adjustments. Additionally, this column includes a slight increase of less than 0.1 to account for our final policy to package unrelated laboratory tests into OPPS payment.

Column 5: All Changes for CY 2017

Column 5 depicts the full impact of the CY 2017 policies on each hospital group by including the effect of all of the changes for CY 2017 and comparing them to all estimated payments in CY 2016. Column 5 shows the combined budget neutral effects of Column 2 and 3; the OPD fee schedule increase; the impact of the frontier State wage index adjustment; the impact of estimated OPPS outlier payments as discussed in section II.G. of this final rule with comment period; the change in the Hospital OQR Program payment reduction for the small number of hospitals in our impact model that failed to meet the reporting requirements (discussed in section XIII. of this final rule with comment period); and the difference in total OPPS payments dedicated to transitional pass-through payments.

Of those hospitals that failed to meet the Hospital OQR Program reporting requirements for the full CY 2016 update (and assumed, for modeling purposes, to be the same number for CY 2017), we included 50 hospitals in our model because they had both CY 2015 claims data and recent cost report data. We estimate that the cumulative effect of all of the changes for CY 2017 will increase payments to all facilities by 1.7 percent for CY 2017. We modeled the independent effect of all of the changes in Column 5 using the final relative payment weights for CY 2016 and the final relative payment weights for CY 2017. We used the final conversion factor for CY 2016 of $73.725 and the final CY 2017 conversion factor of $75.001 discussed in section II.B. of this final rule with comment period.

Column 5 contains simulated outlier payments for each year. We used the 1-year charge inflation factor used in the FY 2017 IPPS/LTCH PPS final rule (81 FR 57286) of 4.8 percent (1.0481) to increase individual costs on the CY 2015 claims, and we used the most recent overall CCR in the July 2016 Outpatient Provider-Specific File (OPSF) to estimate outlier payments for CY 2016. Using the CY 2015 claims and a 4.8 percent charge inflation factor, we currently estimate that outlier payments for CY 2016, using a multiple threshold of 1.75 and a fixed-dollar threshold of $3,250 will be approximately 0.96 percent of total payments. The estimated current outlier payments of 0.96 percent are incorporated in the comparison in Column 5. We used the same set of claims and a charge inflation factor of 9.8 percent (1.0984) and the CCRs in the July 2016 OPSF, with an adjustment of 0.9688, to reflect relative changes in cost and charge inflation between CY 2015 and CY 2017, to model the CY 2017 outliers at 1.0 percent of estimated total payments using a multiple threshold of 1.75 and a fixed-dollar threshold of $3,825. The charge inflation and CCR inflation factors are discussed in detail in the FY 2017 IPPS/LTCH PPS final rule (81 FR 57286).

Overall, we estimate that facilities will experience an increase of 1.7 percent under this final rule with comment period in CY 2017 relative to total spending in CY 2016. This projected increase (shown in Column 5) of Table 52 reflects the 1.65 percent OPD fee schedule increase factor, plus 0.04 percent to account for our finalized policy to package unrelated laboratory tests into OPPS payment, plus 0.02 percent for the change in the pass-through estimate between CY 2016 and CY 2017, plus 0.04 percent for the difference in estimated outlier payments between CY 2016 (0.96 percent) and CY 2017 (1.0 percent). We estimate that the combined effect of all of the changes for CY 2017 will increase payments to urban hospitals by 1.8 percent. Overall, we estimate that rural hospitals will experience a 2.2 percent increase as a result of the combined effects of all of the changes for CY 2017.

Among hospitals by teaching status, we estimate that the impacts resulting from the combined effects of all changes will include an increase of 1.5 percent for major teaching hospitals and an increase of 2.0 percent for nonteaching hospitals. Minor teaching hospitals will experience an estimated increase of 1.9 percent.

In our analysis, we also have categorized hospitals by type of ownership. Based on this analysis, we estimate that voluntary hospitals will experience an increase of 1.9 percent, proprietary hospitals will experience an increase of 1.8 percent, and governmental hospitals will experience an increase of 1.6 percent.

TABLE 52—ESTIMATED IMPACT OF THE CY 2017 CHANGES FOR THE HOSPITAL OUTPATIENT PROSPECTIVE PAYMENT SYSTEM

	Number of hospitals	APC recalibration (all changes)	New wage index and provider adjustments	All budget neutral changes (combined cols 2, 3) with market basket update	All changes
	(1)	(2)	(3)	(4)	(5)
ALL FACILITIES *	3,906	0.0	0.0	1.7	1.7
ALL HOSPITALS (excludes hospitals permanently held harmless and CMHCs)	3,789	0.0	0.0	1.8	1.8
URBAN HOSPITALS	2,958	0.0	0.0	1.7	1.8
LARGE URBAN (GT 1 MILL.)	1,616	0.0	−0.1	1.6	1.7
OTHER URBAN (LE 1 MILL.)	1,342	0.1	0.1	1.8	1.8
RURAL HOSPITALS	831	0.2	0.3	2.2	2.2
SOLE COMMUNITY	376	0.2	0.4	2.3	2.2
OTHER RURAL	455	0.2	0.2	2.1	2.1

TABLE 52—ESTIMATED IMPACT OF THE CY 2017 CHANGES FOR THE HOSPITAL OUTPATIENT PROSPECTIVE PAYMENT SYSTEM—Continued

	Number of hospitals (1)	APC recalibration (all changes) (2)	New wage index and provider adjustments (3)	All budget neutral changes (combined cols 2, 3) with market basket update (4)	All changes (5)
BEDS (URBAN):					
0–99 BEDS	1,045	−0.3	0.2	1.6	1.7
100–199 BEDS	834	0.2	−0.1	1.8	1.8
200–299 BEDS	465	0.2	0.0	1.9	1.9
300–499 BEDS	405	0.1	0.0	1.8	1.9
500+ BEDS	209	−0.2	0.0	1.5	1.5
BEDS (RURAL):					
0–49 BEDS	340	0.3	0.5	2.5	2.5
50–100 BEDS	299	0.2	0.4	2.4	2.3
101–149 BEDS	108	0.1	−0.2	1.6	1.7
150–199 BEDS	45	0.1	0.5	2.3	2.2
200+ BEDS	39	0.2	0.2	2.1	2.1
REGION (URBAN):					
NEW ENGLAND	146	0.0	−1.1	0.6	0.6
MIDDLE ATLANTIC	350	0.0	0.1	1.7	1.7
SOUTH ATLANTIC	465	0.0	0.0	1.7	1.8
EAST NORTH CENT	473	0.1	0.1	1.8	1.9
EAST SOUTH CENT	177	−0.3	0.3	1.7	1.7
WEST NORTH CENT	182	−0.1	0.0	1.6	1.5
WEST SOUTH CENT	527	−0.2	0.3	1.8	1.9
MOUNTAIN	206	0.2	1.0	2.9	3.0
PACIFIC	383	0.4	−0.3	1.7	1.8
PUERTO RICO	49	0.4	−0.3	1.8	1.8
REGION (RURAL):					
NEW ENGLAND	21	0.9	0.5	3.0	2.9
MIDDLE ATLANTIC	55	0.1	1.2	3.0	3.0
SOUTH ATLANTIC	126	0.3	−0.3	1.7	1.7
EAST NORTH CENT	121	0.2	0.4	2.3	2.3
EAST SOUTH CENT	158	0.0	0.2	1.9	1.9
WEST NORTH CENT	100	0.0	0.4	2.2	2.0
WEST SOUTH CENT	168	0.1	0.7	2.6	2.6
MOUNTAIN	58	0.3	−0.1	1.9	1.8
PACIFIC	24	0.3	−0.3	1.7	1.7
TEACHING STATUS:					
NON-TEACHING	2,712	0.1	0.1	1.9	2.0
MINOR	731	0.1	0.0	1.9	1.9
MAJOR	346	−0.2	−0.1	1.4	1.5
DSH PATIENT PERCENT:					
0	10	−1.7	−0.2	−0.3	−0.2
GT 0–0.10	305	−0.4	0.0	1.2	1.3
0.10–0.16	270	0.0	0.1	1.8	1.8
0.16–0.23	600	0.1	0.1	1.9	2.0
0.23–0.35	1,135	0.1	0.1	1.9	1.9
GE 0.35	895	0.1	−0.1	1.7	1.8
DSH NOT AVAILABLE**	574	−1.4	−0.2	0.1	0.1
URBAN TEACHING/DSH:					
TEACHING & DSH	975	0.0	0.0	1.6	1.7
NO TEACHING/DSH	1,425	0.1	0.1	1.9	1.9
NO TEACHING/NO DSH	10	−1.7	−0.2	−0.3	−0.2
DSH NOT AVAILABLE**	548	−1.4	−0.3	0.0	0.1
TYPE OF OWNERSHIP:					
VOLUNTARY	1,983	0.1	0.1	1.8	1.9
PROPRIETARY	1,306	0.0	0.1	1.7	1.8
GOVERNMENT	500	−0.1	−0.1	1.5	1.6
CMHCs	50	−15.1	−0.4	−13.9	−13.7

Column (1) shows total hospitals and/or CMHCs.

Column (2) includes all CY 2017 OPPS policies and compares those to the CY 2016 OPPS.

Column (3) shows the budget neutral impact of updating the wage index by applying the final FY 2017 hospital inpatient wage index, including all hold harmless policies and transitional wages. The rural adjustment continues our current policy of 7.1 percent so the budget neutrality factor is 1. The budget neutrality adjustment for the cancer hospital adjustment is 1.0003 because the target payment-to-cost ratio target changes from 0.92 in CY 2016 to 0.91 in CY 2017 (80 FR 70362 through 70364).

Column (4) shows the impact of all budget neutrality adjustments and the addition of the final 1.65 percent OPD fee schedule update factor. It also includes the impact of the additional adjustment of 1.0004 for laboratory services with ''L1'' modifiers packaged into the OPPS.

Column (5) shows the additional adjustments to the conversion factor resulting from the frontier adjustment, a change in the pass-through payment estimate, and adding estimated outlier payments.

* These 3,906 providers include children and cancer hospitals, which are held harmless to pre-BBA amounts, and CMHCs.

** Complete DSH numbers are not available for providers that are not paid under IPPS, including rehabilitation, psychiatric, and long-term care hospitals.

(3) Estimated Effects of OPPS Changes on CMHCs

The last line of Table U1 demonstrates the isolated impact on CMHCs, which furnish only partial hospitalization services under the OPPS. In CY 2016, CMHCs are paid under two APCs for these services: APC 5851 (Level 1 Partial Hospitalization (3 services) for CMHCs) and APC 5852 (Level 2 Partial Hospitalization (4 or more services) for CMHCs). For CY 2017, we are to combining APCs 5851 and 5852 into new APC 5853 (Partial Hospitalization (3 or more services) for CMHCs). We modeled the impact of this APC policy assuming that CMHCs will continue to provide the same number of days of PHP care as seen in the CY 2015 claims data used for this final rule with comment period. We excluded days with 1 or 2 services because our policy only pays a per diem rate for partial hospitalization when 3 or more qualifying services are provided to the beneficiary. We estimate that CMHCs will experience an overall 13.7 percent decrease in payments from CY 2016 (shown in Column 5). We note that this includes the trimming methodology described in section VIII.B. of this final rule with comment period.

Column 3 shows that the estimated impact of adopting the FY 2017 wage index values will result in a small decrease of 0.4 percent to CMHCs. Column 4 shows that combining this OPD fee schedule increase factor, along with changes in APC policy for CY 2017 and the FY 2017 wage index updates, will result in an estimated decrease of 13.9 percent. Column 5 shows that adding the changes in outlier and pass-though payments will result in a total 13.7 percent decrease in payment for CMHCs. This reflects all changes to CMHCs for CY 2017.

(4) Estimated Effect of OPPS Changes on Beneficiaries

For services for which the beneficiary pays a copayment of 20 percent of the payment rate, the beneficiary's payment will increase for services for which the OPPS payments will rise and will decrease for services for which the OPPS payments will fall. For further discussion on the calculation of the national unadjusted copayments and minimum unadjusted copayments, we refer readers to section II.I. of this final rule with comment period. In all cases, section 1833(t)(8)(C)(i) of the Act limits beneficiary liability for copayment for a procedure performed in a year to the hospital inpatient deductible for the applicable year.

We estimate that the aggregate beneficiary coinsurance percentage will be 18.5 percent for all services paid under the OPPS in CY 2017. The estimated aggregate beneficiary coinsurance reflects general system adjustments, including the CY 2017 comprehensive APC payment policy discussed in section II.A.2.e. of this final rule with comment period.

(5) Estimated Effects of OPPS Changes on Other Providers

The relative payment weights and payment amounts established under the OPPS affect the payments made to ASCs as discussed in section XII. of this final rule with comment period. No types of providers or suppliers other than hospitals, CMHCs, and ASCs will be affected by the changes in this final rule with comment period.

(6) Estimated Effects of OPPS Changes on the Medicare and Medicaid Programs

The effect on the Medicare program is expected to be an increase of $773 million in program payments for OPPS services furnished in CY 2017. The effect on the Medicaid program is expected to be limited to copayments that Medicaid may make on behalf of Medicaid recipients who are also Medicare beneficiaries. We refer readers to our discussion of the impact on beneficiaries in section XXIII.A.4.a.(4) of this final rule with comment period.

(7) Alternative OPPS Policies Considered

Alternatives to the OPPS changes we are making and the reasons for our selected alternatives are discussed throughout this final rule with comment period.

b. Estimated Effects of CY 2017 ASC Payment System Policies

Most ASC payment rates are calculated by multiplying the ASC conversion factor by the ASC relative payment weight. As discussed fully in section XII. of this final rule with comment period, we are setting the CY 2017 ASC relative payment weights by scaling the CY 2017 OPPS relative payment weights by the ASC scalar of 0.9000. The estimated effects of the updated relative payment weights on payment rates are varied and are reflected in the estimated payments displayed in Tables 53 and 54 below.

Beginning in CY 2011, section 3401 of the Affordable Care Act requires that the annual update to the ASC payment system (which currently is the CPI–U) after application of any quality reporting reduction be reduced by a productivity adjustment. The Affordable Care Act defines the productivity adjustment to be equal to the 10-year moving average of changes in annual economy-wide private nonfarm business multifactor productivity (MFP) (as projected by the Secretary for the 10-year period ending with the applicable fiscal year, year, cost reporting period, or other annual period). For ASCs that fail to meet their quality reporting requirements, the CY 2017 payment determinations will be based on the application of a 2.0 percentage points reduction to the annual update factor, which currently is the CPI–U. We calculated the CY 2017 ASC conversion factor by adjusting the CY 2016 ASC conversion factor by 0.9997 to account for changes in the pre-floor and pre-reclassified hospital wage indexes between CY 2016 and CY 2017 and by applying the CY 2017 MFP-adjusted CPI–U update factor of 1.9 percent (projected CPI–U update of 2.2 percent minus a projected productivity adjustment of 0.3 percentage point). The CY 2017 ASC conversion factor is $45.016.

(1) Limitations of Our Analysis

Presented here are the projected effects of the changes for CY 2017 on Medicare payment to ASCs. A key limitation of our analysis is our inability to predict changes in ASC service-mix between CY 2015 and CY 2017 with precision. We believe that the net effect on Medicare expenditures resulting from the CY 2017 changes will be small in the aggregate for all ASCs. However, such changes may have differential effects across surgical specialty groups as ASCs continue to adjust to the payment rates based on the policies of the revised ASC payment system. We are unable to accurately project such changes at a disaggregated level. Clearly, individual ASCs will experience changes in payment that differ from the aggregated estimated impacts presented below.

(2) Estimated Effects of ASC Payment System Policies on ASCs

Some ASCs are multispecialty facilities that perform the gamut of surgical procedures from excision of lesions to hernia repair to cataract extraction; others focus on a single specialty and perform only a limited range of surgical procedures, such as eye, digestive system, or orthopedic procedures. The combined effect on an individual ASC of the update to the CY 2017 payments will depend on a number of factors, including, but not limited to, the mix of services the ASC provides, the volume of specific services provided by the ASC, the percentage of its patients who are Medicare

beneficiaries, and the extent to which an ASC provides different services in the coming year. The following discussion presents tables that display estimates of the impact of the CY 2017 updates to the ASC payment system on Medicare payments to ASCs, assuming the same mix of services as reflected in our CY 2015 claims data. Table 53 depicts the estimated aggregate percent change in payment by surgical specialty or ancillary items and services group by comparing estimated CY 2016 payments to estimated CY 2017 payments, and Table 54 shows a comparison of estimated CY 2016 payments to estimated CY 2017 payments for procedures that we estimate will receive the most Medicare payment in CY 2016.

Table 53 shows the estimated effects on aggregate Medicare payments under the ASC payment system by surgical specialty or ancillary items and services group. We have aggregated the surgical HCPCS codes by specialty group, grouped all HCPCS codes for covered ancillary items and services into a single group, and then estimated the effect on aggregated payment for surgical specialty and ancillary items and services groups. The groups are sorted for display in descending order by estimated Medicare program payment to ASCs. The following is an explanation of the information presented in Table 53.

- Column 1—Surgical Specialty or Ancillary Items and Services Group indicates the surgical specialty into which ASC procedures are grouped and the ancillary items and services group which includes all HCPCS codes for covered ancillary items and services. To group surgical procedures by surgical specialty, we used the CPT code range definitions and Level II HCPCS codes and Category III CPT codes as appropriate, to account for all surgical procedures to which the Medicare program payments are attributed.
- Column 2—Estimated CY 2016 ASC Payments were calculated using CY 2015 ASC utilization (the most recent full year of ASC utilization) and CY 2016 ASC payment rates. The surgical specialty and ancillary items and services groups are displayed in descending order based on estimated CY 2016 ASC payments.
- Column 3—Estimated CY 2017 Percent Change is the aggregate percentage increase or decrease in Medicare program payment to ASCs for each surgical specialty or ancillary items and services group that are attributable to updates to ASC payment rates for CY 2017 compared to CY 2016.

As seen in Table 53, for the six specialty groups that account for the most ASC utilization and spending, we estimate that the update to ASC payment rates for CY 2017 will result in a 2-percent increase in aggregate payment amounts for eye and ocular adnexa procedures, a 1-percent increase in aggregate payment amounts for digestive system procedures, no change in aggregate payment amounts for nervous system procedures, a 8-percent increase in aggregate payment amounts for musculoskeletal system procedures, a 1-percent decrease in aggregate payment amounts for genitourinary system procedures, and a 3-percent decrease in aggregate payment amounts for integumentary system procedures.

Also displayed in Table 53 is a separate estimate of Medicare ASC payments for the group of separately payable covered ancillary items and services. The payment estimates for the covered surgical procedures include the costs of packaged ancillary items and services. We estimate that aggregate payments for these items and services will be $31 million for CY 2017.

TABLE 53—ESTIMATED IMPACT OF THE CY 2017 UPDATE TO THE ASC PAYMENT SYSTEM ON AGGREGATE CY 2017 MEDICARE PROGRAM PAYMENTS BY SURGICAL SPECIALTY OR ANCILLARY ITEMS AND SERVICES GROUP

Surgical specialty group (1)	Estimated CY 2016 ASC payments (in millions) (2)	Estimated CY 2017 percent change (3)
Total	$3,993	2
Eye and ocular adnexa	1,556	2
Digestive system	813	1
Nervous system	687	0
Musculoskeletal system	466	8
Genitourinary system	178	−1
Integumentary system	132	−3

Table 54 below shows the estimated impact of the updates to the revised ASC payment system on aggregate ASC payments for selected surgical procedures during CY 2017. The table displays 30 of the procedures receiving the greatest estimated CY 2016 aggregate Medicare payments to ASCs. The HCPCS codes are sorted in descending order by estimated CY 2016 program payment.

- Column 1–CPT/HCPCS code.
- Column 2–Short Descriptor of the HCPCS code.
- Column 3–Estimated CY 2016 ASC Payments were calculated using CY 2015 ASC utilization (the most recent full year of ASC utilization) and the CY 2016 ASC payment rates. The estimated CY 2016 payments are expressed in millions of dollars.
- Column 4–Estimated CY 2017 Percent Change reflects the percent differences between the estimated ASC payment for CY 2016 and the estimated payment for CY 2017 based on the update.

TABLE 54—ESTIMATED IMPACT OF THE CY 2017 UPDATE TO THE ASC PAYMENT SYSTEM ON AGGREGATE PAYMENTS FOR SELECTED PROCEDURES

CPT/HCPCS code (1)	Short descriptor (2)	Estimated CY 2016 ASC payment (in millions) (3)	Estimated CY 2017 percent change (4)
66984	Cataract surg w/iol 1 stage	$1,108	1
43239	Egd biopsy single/multiple	185	−9
45380	Colonoscopy and biopsy	180	13
45385	Colonoscopy w/lesion removal	118	13
66982	Cataract surgery complex	96	1
64483	Inj foramen epidural l/s	87	6
63685	Insrt/redo spine n generator	82	10
64493	Inj paravert f jnt l/s 1 lev	71	−24
63650	Implant neuroelectrodes	66	12
66821	After cataract laser surgery	65	4
64635	Destroy lumb/sac facet jnt	55	2
29827	Arthroscop rotator cuff repr	54	7
G0105	Colorectal scrn; hi risk ind	53	−14
45378	Diagnostic colonoscopy	52	−14
G0121	Colon ca scrn not hi rsk ind	50	−14
0191T	Insert ant segment drain int	41	43
64590	Insrt/redo pn/gastr stimul	38	10
64721	Carpal tunnel surgery	32	2
29881	Knee arthroscopy/surgery	32	−8
15823	Revision of upper eyelid	32	−2
29880	Knee arthroscopy/surgery	27	−8
26055	Incise finger tendon sheath	24	−14
43235	Egd diagnostic brush wash	24	−9
64490	Inj paravert f jnt c/t 1 lev	24	−24
67042	Vit for macular hole	23	−2
52000	Cystoscopy	21	2
G0260	Inj for sacroiliac jt anesth	21	−16
50590	Fragmenting of kidney stone	21	1
64555	Implant neuroelectrodes	19	14
67904	Repair eyelid defect	18	2

(3) Estimated Effects of ASC Payment System Policies on Beneficiaries

We estimate that the CY 2017 update to the ASC payment system will be generally positive for beneficiaries with respect to the new procedures that we are adding to the ASC list of covered surgical procedures and for those that we are designating as office-based for CY 2017. First, other than certain preventive services where coinsurance and the Part B deductible is waived to comply with sections 1833(a)(1) and (b) of the Act, the ASC coinsurance rate for all procedures is 20 percent. This contrasts with procedures performed in HOPDs under the OPPS, where the beneficiary is responsible for copayments that range from 20 percent to 40 percent of the procedure payment (other than for certain preventive services). Second, in almost all cases, the ASC payment rates under the ASC payment system are lower than payment rates for the same procedures under the OPPS. Therefore, the beneficiary coinsurance amount under the ASC payment system will almost always be less than the OPPS copayment amount for the same services. (The only exceptions would be if the ASC coinsurance amount exceeds the inpatient deductible. The statute requires that copayment amounts under the OPPS not exceed the inpatient deductible.) Beneficiary coinsurance for services migrating from physicians' offices to ASCs may decrease or increase under the revised ASC payment system, depending on the particular service and the relative payment amounts under the MPFS compared to the ASC. However, for those additional procedures that we are designating as office-based in CY 2017, the beneficiary coinsurance amount under the ASC payment system generally will be no greater than the beneficiary coinsurance under the MPFS because the coinsurance under both payment systems generally is 20 percent (except for certain preventive services where the coinsurance is waived under both payment systems).

(4) Alternative ASC Payment Policies Considered

Alternatives to the ASC changes we are making and the reasons for our selected alternatives are discussed throughout this final rule with comment period.

c. Accounting Statements and Tables

As required by OMB Circular A–4 (available on the Office of Management and Budget Web site at: *https://www.whitehouse.gov/sites/default/files/omb/assets/regulatory_matters_pdf/a-4.pdf*, we have prepared two accounting statements to illustrate the impacts of this final rule with comment period. The first accounting statement, Table 55 below, illustrates the classification of expenditures for the CY 2017 estimated hospital OPPS incurred benefit impacts associated with the CY 2017 OPD fee schedule increase, based on the 2016 Trustee's Report. The second accounting statement, Table 56 below, illustrates the classification of expenditures associated with the 1.9 percent CY 2017 update to the ASC payment system, based on the provisions of this final rule with comment period and the baseline spending estimates for ASCs in the 2016 Trustee's Report. Lastly, the tables classify most estimated impacts as transfers.

TABLE 55—ACCOUNTING STATEMENT: CY 2017 ESTIMATED HOSPITAL OPPS TRANSFERS FROM CY 2016 TO CY 2017 ASSOCIATED WITH THE CY 2017 HOSPITAL OUTPATIENT OPD FEE SCHEDULE INCREASE

Category	Transfers
Annualized Monetized Transfers	$773 million.
From Whom to Whom	Federal Government to outpatient hospitals and other providers who receive payment under the hospital OPPS.
Total	$773 million.

TABLE 56—ACCOUNTING STATEMENT: CLASSIFICATION OF ESTIMATED TRANSFERS FROM CY 2016 TO CY 2017 AS A RESULT OF THE CY 2017 UPDATE TO THE ASC PAYMENT SYSTEM

Category	Transfers
Annualized Monetized Transfers	$63 million.
From Whom to Whom	Federal Government to Medicare Providers and Suppliers.
Total	$63 million

d. Effects of Requirements for the Hospital OQR Program

We refer readers to the CY 2016 OPPS/ASC final rule with comment period (80 FR 70593 through 70594), for the estimated effects of changes to the Hospital OQR Program for the CY 2018 payment determination. In section XIII. of this final rule with comment period, we are finalizing changes to policies affecting the Hospital OQR Program. Of the 3,266 hospitals that met eligibility requirements for the CY 2016 payment determination, we determined that 113 hospitals did not meet the requirements to receive the full OPD fee schedule increase factor. Most of these hospitals (71 of the 113), chose not to participate in the Hospital OQR Program for the CY 2016 payment determination.[264] We estimate that approximately 108 to 121 hospitals will not receive the full OPD fee schedule increase factor for the CY 2018 payment determination and subsequent years.

In section XIII. of this final rule with comment period, we are finalizing several changes to the Hospital OQR Program for the CY 2018 payment determination and subsequent years, CY 2019 payment determination and subsequent years, and the CY 2020 payment determination and subsequent years. We do not believe that any of the other changes we are making will increase burden, as further discussed below.

For the CY 2018 payment determination and subsequent years, we are finalizing, as proposed, that we will publicly display data on the *Hospital Compare* Web site, or other CMS Web site, as soon as possible after measure data have been submitted to CMS. In addition, we are finalizing, as proposed, that hospitals will generally have approximately 30 days to preview their data. Both of these policies are consistent with current practice. Lastly, we are finalizing, as proposed, that we will announce the timeframes for the preview period starting with the CY 2018 payment determination on a CMS Web site and/or on our applicable listservs. We do not anticipate additional burden to hospitals as a result of these changes to the public display policies because hospitals will not be required to submit additional data or forms to CMS.

For the CY 2019 payment determination and subsequent years, we are finalizing our proposal to extend the time for filing an extraordinary circumstance extension or exemption request from 45 days to 90 days. We do not anticipate additional burden to hospitals as a result of this policy because the requirements for filing a request have not otherwise changed.

For the CY 2020 payment determination and subsequent years, we are finalizing, as proposed, two new claims-based measures for the Hospital OQR Program: OP–35: Admissions and Emergency Department Visits for Patients Receiving Outpatient Chemotherapy; and OP–36: Hospital Visits after Hospital Outpatient Surgery (NQF #2687). For the CY 2020 payment determination and subsequent years, we also are adopting, as proposed, five new OAS CAHPS Survey-based measures: (1) OP–37a: OAS CAHPS—About Facilities and Staff; (2) OP–37b: OAS CAHPS—Communication About Procedure; (3) OP–37c: OAS CAHPS—Preparation for Discharge and Recovery; (4) OP–37d: OAS CAHPS—Overall Rating of Facility; and (5) OP–37e: OAS CAHPS—Recommendation of Facility. As discussed in section XXI.B.4. of this final rule with comment period, we do not believe that the OP–35 and OP–36 measures will create any additional burden across all participating hospitals because these measures use Medicare FFS claims data and do not require additional hospital data submissions. In addition, as discussed in the same section, the burden associated with the OAS CAHPS Survey-based measures (OP–37a, OP–37b, OP–37c, OP–37d, and OP–37e) is already accounted for in previously approved OMB Control Number 0938–1240.

We refer readers to section XXI.B. of this final rule with comment period (information collection requirements) for a detailed discussion of the burden of the additional requirements for submitting data to the Hospital OQR Program.

e. Effects of Requirements for the ASCQR Program

In section XIV. of this final rule with comment period, we discuss our finalized policies affecting the ASCQR Program. For the CY 2016 payment determination, of the 5,260 ASCs that met eligibility requirements for the ASCQR Program, 261 ASCs did not meet the requirements to receive the full annual payment update. We note that, in the CY 2016 OPPS/ASC final rule with comment period (80 FR 70594), we used the CY 2015 payment determination numbers as a baseline, and estimated that approximately 115 ASCs will not receive the full annual payment update in CY 2018 due to failure to meet the ASCQR Program requirements (CY 2016 and CY 2017 payment determination information were not yet available).

[264] We note in the CY 2017 OPPS/ASC proposed rule (81 FR 45769), we stated that the hospitals chose not to participate in the Hospital OQR Program for the CY 2015 payment determination instead of the CY 2016 payment determination. This was a typographical error, and the correct payment determination year is CY 2016.

For the CY 2018 payment determination and subsequent years, we are making a few changes in policies. In section XIV.B.7. of this final rule with comment period, we are finalizing, as proposed, that we will publicly display data on the *Hospital Compare* Web site, or other CMS Web site, as soon as possible after measure data have been submitted to CMS. In addition, we are finalizing, as proposed, that ASCs will generally have approximately 30 days to preview their data. Both of these policies are consistent with current practice. Lastly, we are finalizing, as proposed, that we will announce the timeframes for the preview period starting with the CY 2018 payment determination on a CMS Web site and/or on our applicable listservs. We believe that these changes to the ASCQR Program public reporting policies will have no effect on burden for ASCs because these changes would not require participating ASCs to submit additional data to CMS.

For the CY 2019 payment determination and subsequent years, we are finalizing, as proposed, two new policy changes. In section XIV.D.3. of this final rule with comment period, we are finalizing our proposal to implement a submission deadline with an end date of May 15 for all data submitted via a CMS Web-based tool beginning with the CY 2019 payment determination, as proposed. (For all data submitted via a non CMS Web-based tool, ASCs are already required to submit by May 15 of the year prior to the affected payment determination year (79 FR 66985 through 66986).) We do not anticipate additional burden as the data collection and submission requirements have not changed; only the deadline will be moved to a slightly earlier date that we anticipate will alleviate burden by aligning data submission deadlines. In section XIV.D.6. of this final rule with comment period, we are finalizing our proposal to extend the time for filing an extraordinary circumstance extension or exemption request from 45 days to 90 days. We do not believe this policy will result in additional burden to ASCs because the requirements for filing a request have not otherwise changed. We are not adding any quality measures to the ASCQR Program measure set for the CY 2019 payment determination, nor do we believe that the other measures we previously adopted will cause any additional ASCs to fail to meet the ASCQR Program requirements. (We refer readers to the CY 2015 OPPS/ASC final rule with comment period (79 FR 66978 through 66979) for a list of these measures.) Therefore, we do not believe that these changes will increase the number of ASCs that do not receive a full annual payment update for the CY 2019 payment determination.

In section XIV.B.4. of this final rule with comment period, we are finalizing, as proposed, two new measures collected via a CMS online data submission tool to the ASCQR Program measure set beginning with the CY 2020 payment determination—ASC–13: Normothermia Outcome and ASC–14: Unplanned Anterior Vitrectomy—and five new OAS CAHPS Survey-based measures beginning with the CY 2020 payment determination: (1) ASC–15a: OAS CAHPS—About Facilities and Staff; (2) ASC–15b: OAS CAHPS—Communication About Procedure; (3) ASC–15c: OAS CAHPS—Preparation for Discharge and Recovery; (4) ASC–15d: OAS CAHPS—Overall Rating of Facility; and (5) ASC–15e: OAS CAHPS—Recommendation of Facility. As discussed in section XXI.C.2. of this final rule with comment period, we estimate a data collection and submission burden of approximately 15.75 hours and $517 (15.75 hours x $32.84 per hour) each per ASC for the ASC–13 and ASC–14 measures based on an average sample of 63 cases. This results in a total estimated burden of approximately 82,845 hours and $2,720,630 each for the ASC–13 and ASC–14 measures across all ASCs based on an average sample of 63 cases per ASC. In addition, and as discussed in the same section, the burden associated with the OAS CAHPS Survey-based measures is already accounted for in a previously approved OMB Control Number 0938–1240.

In the CY 2017 OPPS/ASC proposed rule (81 FR 45770 through 45771), we invited public comment on the burden associated with our proposals in the proposed rule. We did not receive any comments on the burden associated with our proposals in the proposed rule, and therefore, are finalizing our burden estimates as discussed. We refer readers to the information collection requirements in sections XXI.C.2. through XXI.C.5. of this final rule with comment period for a detailed discussion of the financial and hourly burden of the ASCQR Program's current and new requirements.

f. Effects of the Changes to Transplant Performance Thresholds

In section XV. of this final rule with comment period, we discuss our proposed and finalized changes to the transplant centers performance thresholds to restore the tolerance range for patient and graft survival with respect to organ transplants to those we established in our 2007 regulations. We considered the option of leaving the current regulation unchanged. However, given the recent upward trend in the percent of unused adult kidneys, combined with an increase in the number of recovered organs, we do not believe that inaction is advisable. In addition, in the original 2007 organ transplant rule, CMS committed to review the outcomes thresholds if it considered them to be set at a level that was too high or too low. We are following through on that commitment.

We considered the option of leaving the regulation unchanged and instead reclassifying a larger range of outcomes as a ''standard-level'' rather than the more serious ''condition-level'' deficiency. We have already taken this approach to a considerable extent in survey and certification guidance (*https://www.cms.gov/Medicare/Provider-Enrollment-and-Certification/SurveyCertificationGenInfo/Policy-and-Memos-to-States-and-Regions.html*). However, standard-level deficiencies must be remedied at some point; therefore, reclassification may not yield the change necessary to address an increasingly stringent outcomes requirement.

We considered the option of creating a ''balancing measure'' that would directly measure a transplant program's effectiveness in using organs, including tracking organs that are declined to see if other programs were able to make use of the organs successfully for long term graft survival. Such a balancing measure could ''unflag'' a program that had been flagged for substandard outcomes under the existing outcome measures. The OPTN developed a concept paper to obtain public comment for a similar idea, in which highest risk organs might be removed from the data when calculating outcomes (*https://optn.transplant.hrsa.gov/governance/public-comment/performance-metrics-concept-paper/*). This concept is slightly different than use of a balancing measure, but both approaches would require a multiyear effort to construct, test, and study the effects, including potential undesirable side effects. It is not an option readily available.

We considered the argument that the regulation should be unchanged because CMS should expect health care providers to improve outcomes over time, and, if the outcomes standard is becoming more difficult to meet, providers should rise to the challenge. We agree that we should expect health care providers to improve outcomes over time. However, once programs are at a very high level of performance, there is little room to improve.

Therefore, there is no persuasive reason to leave the regulations unchanged. First, in addition to patient and graft survival, we are interested in optimizing the use of organs so that individuals on the waiting list can gain the benefits of a transplant. To the extent that there are unintended and undesirable effects on this access goal that outweigh the value gained from an increasingly stringent outcomes requirement, we believe we should respond. Second, the transplant community has demonstrated a track record of consistent improvement efforts and innovation. Third, we commissioned a study that found that the overall risk levels of both available organs and transplant candidates have been increasing every year.[265] To the extent these population trends continue (for example, increasing age, higher rates of diabetes, obesity, hypertension), transplant programs will continue to be challenged to improve their care and processes just to sustain the patient and graft survival rates already achieved. We will continue to monitor these trends.

Finally, we considered the option to adopt the Bayesian methodology that the OPTN recently adopted. We are not doing so at this time because the OPTN continues to study its implementation of that methodology and to evaluate its own thresholds for flagging programs in relation to the Bayesian model.

We believe that the finalized changes in this final rule with comment period will result in costs savings to hospitals. The savings results from: (1) Fewer programs that would need to file a request for approval on the basis of mitigating factors; and (2) fewer programs that would need to fulfill the terms of an SIA. Both a mitigating factors review and completion of an SIA are voluntary acts on the part of a hospital that maintains a transplant program. Since the 2007 effective date of the CMS regulation, only one hospital has not filed a request for mitigating factors review after being cited by CMS for a condition-level deficiency for patient outcomes or clinical experience, and few hospitals have declined a CMS offer to complete an SIA. Therefore, we have concluded that the costs involved in these activities are much lower for the hospital compared with other alternatives, such as filing an appeal and incurring the legal costs of that appeal.

In the two SRTR reports from 2015, a total of 54 programs were flagged once (24 of which were adult kidney programs). If the performance threshold were set at 1.85 instead of the existing 1.5, this number would have been reduced to 48 programs (21 of which would have been adult kidney programs). However, the cost savings would occur mainly for programs that were multiple-flagged and met the criteria for citation at the condition-level. These are the programs that are cited at the condition level and risk termination of Medicare approval unless they are approved under the mitigating factors provision, and some of those programs would not be approved without successful completion of an SIA. Historically, of the programs that voluntarily withdrew from Medicare participation pending termination or were terminated based on outcomes deficiencies for which data are available, all had O/E ratios above the performance threshold of 1.85. For CY 2015, a total of 30 programs met the criteria for condition-level deficiency (15 of which were adult kidney programs). If the threshold had been at the 1.85 instead of 1.5 level, these numbers would have been reduced to 27 and 13 respectively.

We estimate the cost associated with the application for mitigating factors at $10,000. This is based on the salary for the transplant administrator to prepare the documents for the application during the 30-day timeframe allotted. Based on the CY 2015 SRTR reports described earlier, we estimate that three fewer programs each year will need to file a mitigating factors request, yielding a small savings of $30,000 per year.

We also estimate that four fewer programs each year will be required to complete an SIA. For transplant programs that enter into an SIA, the estimated cost to the transplant program is $250,000 based on reports from programs that have completed such agreements in the past. Therefore, we estimate the annual cost savings to hospitals from fewer SIAs to be $1 million.

We estimate that the total costs savings will be $1 million per year ($1 million plus $30,000), and conclude that our finalized policies will not have a significant impact on a substantial number of small businesses or other small entities, given both the small number of programs affected and the large size of many entities with transplant programs. Nor will they have a significant impact on small rural hospitals.

g. Effects of the Changes Relating to Organ Procurement Organizations (OPOs)

In section XVI. of this final rule with comment period, we discuss our proposed and finalized policies to expand and clarify the current OPO regulation as it relates to revising the definition of eligible death, adjusting the outcome performance yield measure and changing the documentation requirements of donor information to the transplant center to align CMS policy with OPTN policy and the SRTR yield metric.

All 58 OPOs will be affected by the changed requirements to a greater or lesser degree. Many OPOs have already put into practice many of these requirements. Thus, while we do not believe these changed requirements will have a substantial economic impact on a significant number of OPOs, we believe it is desirable to inform the public of our projections of the likely effects of these changed requirements on OPOs. It is important to note that because OPOs are paid by the Medicare program on a cost basis, any additional costs that exceed an OPO's annual revenues will be fully paid under the Medicare program. In addition, these changed requirements will have no identifiable economic impact on transplant hospitals. It is expected that improved OPO performance will result from the proposals and increase organ donation and the number of organs available for transplantation.

The definition and yield metric changes will result in no additional burden. OPOs already report a large amount of data to the OPTN which, in turn, provides the data to the SRTR for analysis. OPOs will not be asked to report additional data as a result of the changes.

The change in the documentation requirements of donor information sent to the transplant center with the organs will reduce burden for the OPOs. This change will reduce the amount of hard copy documentation that is packaged and shipped with each organ and will free up the OPO transplant coordinator's time to focus on the critical donor management and organ preparation tasks. We estimate that this change will save OPOs a total of approximately $259,000 a year for all 58 certified OPOs. There were approximately 7,000 deceased eligible donors in 2014 (according to the CMS data report), which will require hard copy documentation packaged and shipped with the organ(s) procured by the OPO transplant coordinator. According to *http://www.payscale.com/*, the average

[265] White, Zinsser et al., ''Patient Selection and Volume in the Era Surrounding Implementation of Medicare Conditions of Participation for Transplant Programs,'' *Health Services Research,* DOI: 10.111/1465–6773.12188.

salary for an OPO transplant coordinator is $70,693 per year, which is approximately $37 an hour. We estimate that it takes an OPO transplant coordinator approximately 1 hour to print, package, and ship the hard copy documentation with the organ(s) at $37 an hour for approximately 7,000 deceased donors. Thirty-seven dollars an hour multiplied by 7,000 deceased donors which require hard copy documentation equals $259,000 and 7,000 hours saved for OPOs nationwide. The primary economic impact of these changes will lie with their potential to increase organ donation. However, it is difficult to predict precisely what that impact will be, but we estimate that, by increasing OPOs' efficiency and adherence to continuous quality improvement measures, these changes could increase the number of organ donors in the regulation's first year.

With regard to the impact of the transplant enforcement technical corrections and other revisions to § 488.61 discussed in section XVII. of this final rule with comment period, there is no economic impact.

h. Effects of the Changes to the Medicare and Medicaid Electronic Health Record (EHR) Incentive Programs

In section XVIII. of this final rule with comment period, we discuss changed requirements for the Medicare and Medicaid EHR Incentive Programs. Specifically, in this final rule with comment period, for eligible hospitals and CAHs attesting to CMS, we are eliminating the Clinical Decision Support (CDS) and Computerized Provider Order Entry (CPOE) objectives and measures for Modified Stage 2 and Stage 3 as well as reducing the reporting thresholds on a subset of the remaining objectives and measures to the Modified Stage 2 thresholds. We do not believe that the changes will increase burden on eligible hospitals and CAHs as the objectives and measures remain the same; only a subset of thresholds will be reduced. In addition, the changes to eliminate the CDS and CPOE objectives and measures are based on high performance and the statistical evidence demonstrates that the expected result of any provider attesting to the EHR Incentive Programs will be a score near the maximum. While the functions of measures and the processes behind them will continue even without a requirement to report the results, the provisions will result in a reduction in reporting requirements. Based on the public comments we received, we are finalizing a policy that these changes to the objectives and measures apply for all eligible hospitals and CAHs that attest to CMS, including eligible hospitals and CAHs that are eligible to participate in both the Medicare and Medicaid EHR Incentive Programs.

We also are modifying the EHR reporting period in 2016 and 2017 for all returning EPs, eligible hospitals and CAHs that have previously demonstrated meaningful use to any continuous 90-day period within the calendar year. We do not believe that the modification of the EHR reporting period in 2016 and 2017 to any continuous 90-day period will increase the reporting burden of providers in the Medicare and Medicaid EHR Incentive Programs as all providers attested to a 90-day EHR reporting period in 2015. We are modifying the options for reporting on Modified Stage 2 or Stage 3 objectives finalized in the 2015 EHR Incentive Programs Final Rule by requiring new participants in 2017 who are seeking to avoid the 2018 payment adjustment to attest to the Modified Stage 2 objectives and measures. We do not believe that requiring new participants in 2017 to attest to Modified Stage 2 objectives and measures will increase the reporting burden because new participants using 2014 Edition, 2015 Edition, or any combination of 2014 and 2015 Edition certified EHR technology in 2017 will have the necessary technical capabilities to attest to the Modified Stage 2 objectives and measures.

We are providing that for all meaningful use measures, unless otherwise specified, actions included in the numerator must occur within the EHR reporting period if that period is a full calendar year, or if it is less than a full calendar year, within the calendar year in which the EHR reporting period occurs. Because this change only affect the time period within which certain actions must occur, but not the underlying actions to be reported, we do not believe that this change will affect the burden on meaningful users. Finally, we are providing a one-time significant hardship exception from the 2018 payment adjustment for certain EPs who are new participants in the EHR Incentive Program in 2017 and are transitioning to MIPS in 2017. We do not believe the change to allow a one-time significant hardship exception from the 2018 payment adjustment for certain EPs will increase their burden. Rather, we believe this will reduce the reporting burden for 2017 because this change will reduce confusion on the different reporting requirements for the EHR Incentive Program and MIPs as well as the different systems to which participants will need to register and attest.

i. Effects of Requirements for the Hospital VBP Program

In section XIX. of this final rule with comment period, we discuss finalizing our proposal to change the scoring methodology for the Patient- and Caregiver-Centered Experience of Care/Care Coordination domain in the Hospital VBP Program by removing the HCAHPS Pain Management dimension from the Patient- and Caregiver-Centered Experience of Care/Care Coordination domain beginning with the FY 2018 program year.

As noted in section XXI.G. of this final rule with comment period, as required under section 1886(o)(2)(A) of the Act, the HCAHPS Survey is included the Hospital IQR Program. Therefore, we believe that removing the HCAHPS Pain Management dimension from the Hospital VBP Program beginning with the FY 2018 program year will have no effect on burden for participating hospitals because this change does not change the data that are submitted to CMS; it only affects how the scoring is computed under the domain in the Hospital VBP Program.

j. Effects of Implementation of Section 603 of the Bipartisan Budget Act of 2015 Relating to Payment for Nonexcepted Items and Services Furnished by Nonexcepted Off-Campus Departments of a Provider

In section X.A. of this final rule with comment period, we discuss the implementation of section 603 of the Bipartisan Budget Act of 2015 relating to payments for nonexcepted items and services furnished by nonexcepted off-campus departments of a provider. Section 603 does not impact OPPS payment rates or payments to OPPS-eligible providers. The impact tables displayed in section XXIII.A.3. of this final rule with comment period do not factor in changes in volume or service-mix in OPPS payments. As a result, the impact tables displayed in section XXIII.A.3. of this final rule with comment period do not reflect changes in the volume of OPPS services due to the implementation of section 603.

We estimate that implementation of section 603 will reduce net OPPS payments by $500 million in CY 2017, relative to a baseline where section 603 was not implemented in CY 2017. These estimates reflect that the reduced spending from implementation of section 603 results in a lower Part B premium; the reduced Part B spending is slightly offset by lower aggregate Part B premium collections. Additional information on the impact of implementing section 603 of Public Law

114–74 is provided in the interim final rule with comment period under section X.B. of this document.

B. Regulatory Flexibility Act (RFA) Analysis

The RFA requires agencies to analyze options for regulatory relief of small entities, if a rule has a significant impact on a substantial number of small entities. For purposes of the RFA, we estimate that most hospitals, ASCs and CMHCs are small entities as that term is used in the RFA. For purposes of the RFA, most hospitals are considered small businesses according to the Small Business Administration's size standards with total revenues of $38.5 million or less in any single year or by the hospital's not-for-profit status. Most ASCs and most CMHCs are considered small businesses with total revenues of $15 million or less in any single year. For details, see the Small Business Administration's ''Table of Small Business Size Standards'' at *http://www.sba.gov/content/table-small-business-size-standards*.

In addition, section 1102(b) of the Act requires us to prepare a regulatory impact analysis if a rule may have a significant impact on the operations of a substantial number of small rural hospitals. This analysis must conform to the provisions of section 604 of the RFA. For purposes of section 1102(b) of the Act, we define a small rural hospital as a hospital that is located outside of a metropolitan statistical area and has 100 or fewer beds. We estimate that this final rule with comment period will increase payments to small rural hospitals by less than 3 percent; therefore, it should not have a significant impact on approximately 639 small rural hospitals.

The analysis above, together with the remainder of this preamble, provides a regulatory flexibility analysis and a regulatory impact analysis.

C. Unfunded Mandates Reform Act Analysis

Section 202 of the Unfunded Mandates Reform Act of 1995 (UMRA) also requires that agencies assess anticipated costs and benefits before issuing any rule whose mandates require spending in any 1 year of $100 million in 1995 dollars, updated annually for inflation. That threshold level is currently approximately $146 million. This final rule with comment period does not mandate any requirements for State, local, or tribal governments, or for the private sector.

D. Conclusion

The changes we are making in this final rule with comment period will affect all classes of hospitals paid under the OPPS and will affect both CMHCs and ASCs. We estimate that most classes of hospitals paid under the OPPS will experience a modest increase or a minimal decrease in payment for services furnished under the OPPS in CY 2017. Table 52 demonstrates the estimated distributional impact of the OPPS budget neutrality requirements that will result in a 1.7 percent increase in payments for all services paid under the OPPS in CY 2017, after considering all of the changes to APC reconfiguration and recalibration, as well as the OPD fee schedule increase factor, wage index changes, including the frontier State wage index adjustment, estimated payment for outliers, and changes to the pass-through payment estimate. However, some classes of providers that are paid under the OPPS will experience more significant gains or losses in OPPS payments in CY 2017.

The updates to the ASC payment system for CY 2017 will affect each of the approximately 5,300 ASCs currently approved for participation in the Medicare program. The effect on an individual ASC will depend on its mix of patients, the proportion of the ASC's patients who are Medicare beneficiaries, the degree to which the payments for the procedures offered by the ASC are changed under the ASC payment system, and the extent to which the ASC provides a different set of procedures in the coming year. Table 53 demonstrates the estimated distributional impact among ASC surgical specialties of the MFP-adjusted CPI–U update factor of 1.9 percent for CY 2017.

XXV. Federalism Analysis

Executive Order 13132 establishes certain requirements that an agency must meet when it promulgates a proposed rule (and subsequent final rule) that imposes substantial direct costs on State and local governments, preempts State law, or otherwise has Federalism implications. We have examined the OPPS and ASC provisions included in this final rule with comment period in accordance with Executive Order 13132, Federalism, and have determined that they will not have a substantial direct effect on State, local or tribal governments, preempt State law, or otherwise have a Federalism implication. As reflected in Table 52 of this final rule with comment period, we estimate that OPPS payments to governmental hospitals (including State and local governmental hospitals) will increase by 1.6 percent under this final rule with comment period. While we do not know the number of ASCs or CMHCs with government ownership, we anticipate that it is small. The analyses we have provided in this section of this final rule with comment period, in conjunction with the remainder of this document, demonstrate that this final rule with comment period is consistent with the regulatory philosophy and principles identified in Executive Order 12866, the RFA, and section 1102(b) of the Act. This final rule with comment period will affect payments to a substantial number of small rural hospitals and a small number of rural ASCs, as well as other classes of hospitals, CMHCs, and ASCs, and some effects may be significant.

List of Subjects

42 CFR Part 414

Administrative practice and procedure, Health facilities, Health professions, Kidney disease, Medicare, Reporting and recordkeeping

42 CFR Part 416

Health facilities, Health professions, Medicare, Reporting and recordkeeping requirements.

42 CFR Part 419

Hospitals, Medicare, Reporting and recordkeeping requirements.

42 CFR Part 482

Grant programs—health, Hospitals, Medicaid, Medicare, Reporting and recordkeeping requirements.

42 CFR Part 486

Grant programs—health, Health facilities, Medicare, Reporting and recordkeeping requirements, X-rays.

42 CFR Part 488

Administrative practice and procedure, Health facilities, Medicare, Reporting and recordkeeping requirements.

42 CFR Part 495

Administrative practice and procedure, Electronic health records, Health facilities, Health professions, Health maintenance organizations (HMO), Medicaid, Medicare, Penalties, Privacy, Reporting and recordkeeping requirements.

For reasons stated in the preamble of this document, the Centers for Medicare & Medicaid Services is amending 42 CFR chapter IV as set forth below:

PART 414—PAYMENT FOR PART B MEDICAL AND OTHER HEALTH SERVICES

■ 1. The authority citation for part 414 continues to reads as follows:

Authority: Secs. 1102, 1871, and 1881(b)(2) of the Social Security Act (42 U.S.C. 1302, 1395hh, and 1395rr(b)(1)).

§ 414.22 [Amended]

■ 2. Section 414.22 is amended by removing and reserving paragraph (b)(5)(ii).

PART 416—AMBULATORY SURGICAL SERVICES

■ 3. The authority citation for part 416 continues to read as follows:

Authority: Secs. 1102 and 1871 of the Social Security Act (42 U.S.C. 1302 and 1395hh).

■ 4. Section 416.171 is amended by revising paragraph (b)(2) to read as follows:

§ 416.171 Determination of payment rates for ASC services.

* * * * *

(b) * * *

(2) The device portion of device-intensive procedures, which are procedures with a HCPCS code-level device offset of greater than 40 percent when calculated according to the standard OPPS APC ratesetting methodology.

* * * * *

■ 5. Section 416.310 is amended by revising paragraphs (c)(1)(ii) and (d)(1) and adding paragraph (e) to read as follows:

§ 416.310. Data collection and submission requirements under the ASCQR Program.

* * * * *

(c) * * *

(1) * * *

(ii) *Data collection requirements.* The data collection time period for quality measures for which data are submitted via a CMS online data submission tool is for services furnished during the calendar year 2 years prior to the payment determination year. Beginning with the CY 2017 payment determination year, data collected must be submitted during the time period of January 1 to May 15 in the year prior to the payment determination year.

* * * * *

(d) * * *

(1) Upon request of the ASC. ASCs may request an extension or exemption within 90 days of the date that the extraordinary circumstance occurred. Specific requirements for submission of a request for an extension or exemption are available on the QualityNet Web site; or

* * * * *

(e) *Requirements for Outpatient and Ambulatory Surgery Consumer Assessment of Healthcare Providers and Systems (OAS CAHPS) Survey.* OAS CAHPS is the Outpatient and Ambulatory Surgical Center Consumer Assessment of Healthcare Providers and Systems survey that measures patient experience of care after a recent surgery or procedure at either a hospital outpatient department or an ambulatory surgical center. Ambulatory surgical centers must use an approved OAS CAHPS survey vendor to administer and submit OAS CAHPS data to CMS.

(1) [Reserved]

(2) CMS approves an application for an entity to administer the OAS CAHPS survey as a vendor on behalf of one or more ambulatory surgical centers when the applicant has met the Minimum Survey Requirements and Rules of Participation that can be found on the official OAS CAHPS Web site, and agrees to comply with the current survey administration protocols that can be found on the official OAS CAHPS Web site. An entity must be an approved OAS CAHPS Survey vendor in order to administer the OAS CAPHS Survey and submit data to CMS on behalf of one or more ambulatory surgical centers.

PART 419—PROSPECTIVE PAYMENT SYSTEM FOR HOSPITAL OUTPATIENT DEPARTMENT SERVICES

■ 6. The authority citation for part 419 continues to read as follows:

Authority: Secs. 1102, 1833(t), and 1871 of the Social Security Act (42 U.S.C. 1302, 1395l(t), and 1395hh).

■ 7. Section 419.22 is amended by adding paragraph (v) to read as follows:

§ 419.22 Hospital services excluded from payment under the hospital outpatient prospective payment system.

* * * * *

(v) Effective January 1, 2017, for cost reporting periods beginning on or after January 1, 2017, items and services that do not meet the definition of excepted items and services under § 419.48(a).

■ 8. Section 419.32 is amended by adding paragraph (b)(1)(iv)(B)(*8*) to read as follows:

§ 419.32 Calculation of prospective payment rates for hospital outpatient services.

* * * * *

(b) * * *

(1) * * *

(iv) * * *

(B) * * *

(*8*) For calendar year 2017, a multiproductivity adjustment (as determined by CMS) and 0.75 percentage point.

* * * * *

■ 9. Section 419.43 is amended by adding paragraph (d)(7) to read as follows:

§ 419.43 Adjustments to national program payment and beneficiary copayment amounts.

* * * * *

(d) * * *

(7) *Community mental health center (CMHC) outlier payment cap.* Outlier payments made to CMHCs for services provided on or after January 1, 2017 are subject to a cap, applied at the individual CMHC level, so that each CMHC's total outlier payments for the calendar year do not exceed 8 percent of that CMHC's total per diem payments for the calendar year. Total per diem payments are total Medicare per diem payments plus the total beneficiary share of those per diem payments.

* * * * *

■ 10. Section 419.44 is amended by revising paragraph (b)(2) to read as follows:

§ 419.44 Payment reductions for procedures.

* * * * *

(b) * * *

(2) For all device-intensive procedures (defined as having a device offset of greater than 40 percent), the device offset portion of the device-intensive procedure payment is subtracted prior to determining the program payment and beneficiary copayment amounts identified in paragraph (b)(1)(ii) of this section.

■ 11. Section 419.46 is amended by adding paragraph (g) to read as follows:

§ 419.46 Participation, data submission, and validation requirements under the Hospital Outpatient Quality Reporting (OQR) Program.

* * * * *

(g) *Requirements for Outpatient and Ambulatory Surgery Consumer Assessment of Healthcare Providers and Systems (OAS CAHPS) Survey.* OAS CAHPS is the Outpatient and Ambulatory Surgical Center Consumer Assessment of Healthcare Providers and Systems Survey that measures patient experience of care after a recent surgery or procedure at either a hospital outpatient department or an ambulatory surgical center. Hospital outpatient departments must use an approved OAS

CAHPS survey vendor to administer and submit OAS CAHPS data to CMS.

(1) [Reserved]

(2) CMS approves an application for an entity to administer the OAS CAHPS Survey as a vendor on behalf of one or more hospital outpatient departments when the applicant has met the Minimum Survey Requirements and Rules of Participation that can be found on the official OAS CAHPS Web site, and agrees to comply with the current survey administration protocols that can be found on the official OAS CAHPS Survey Web site. An entity must be an approved OAS CAHPS Survey vendor in order to administer and submit OAS CAHPS Survey data to CMS on behalf of one or more hospital outpatient departments.

■ 12. Section 419.48 is added to subpart D to read as follows:

§ 419.48 Definition of excepted items and services.

(a) Excepted items and services are items or services that are furnished on or after January 1, 2017—

(1) By a dedicated emergency department (as defined at § 489.24(b) of this chapter); or

(2) By an excepted off-campus provider-based department defined in paragraph (b) of this section that has not impermissibly relocated or changed ownership.

(b) For the purpose of this section, ''excepted off-campus provider-based department'' means a ''department of a provider'' (as defined at § 413.65(a)(2) of this chapter) that as of November 2, 2015 was located on the campus (as defined in § 413.65(a)(2) of this chapter) or within the distance described in such definition from a ''remote location of a hospital'' (as defined in § 413.65(a)(2) of this chapter) that meets the requirements for provider-based status under § 413.65 of this chapter. This definition also includes a department of a provider that was billing under the OPPS with respect to covered OPD services furnished prior to November 2, 2015.

(c) Payment for items and services that do not meet the definition in paragraph (a) of this section will generally be made under the Medicare Physician Fee Schedule on or after January 1, 2017.

■ 13. Section 419.66 is amended by revising paragraph (g) to read as follows:

§ 419.66 Transitional pass-through payments: Medical devices.

* * * * *

(g) *Limited period of payment for devices.* CMS limits the eligibility of a pass-through payment established under this section to a period of at least 2 years, but not more than 3 years, beginning on the first date on which pass-through payment is made.

* * * * *

PART 482—CONDITIONS OF PARTICIPATION FOR HOSPITALS

■ 14. The authority citation for part 482 continues to read as follows:

Authority: Secs. 1102, 1871, and 1881 of the Social Security Act (42 U.S.C. 1302, 1395hh, and 1395rr), unless otherwise noted.

■ 15. Section 482.80 is amended by revising paragraph (c)(2)(ii)(C) to read as follows:

§ 482.80 Condition of participation: Data submission, clinical experience, and outcome requirements for initial approval of transplant centers.

* * * * *

(c) * * *

(2) * * *

(ii) * * *

(C) The number of observed events divided by the number of expected events is greater than 1.85.

* * * * *

■ 16. Section 482.82 is amended by revising paragraph (c)(2)(ii)(C) to read as follows:

§ 482.82 Condition of participation: Data submission, clinical experience, and outcome requirements for re-approval of transplant centers.

* * * * *

(c) * * *

(2) * * *

(ii) * * *

(C) The number of observed events divided by the number of expected events is greater than 1.85.

* * * * *

PART 486—CONDITIONS FOR COVERAGE OF SPECIALIZED SERVICES FURNISHED BY SUPPLIERS

■ 17. The authority citation for part 486 continues to read as follows:

Authority: 1102, 1138, and 1871 of the Social Security Act (42 U.S.C. 1302, 1320b–8, and 1395hh) and section 371 of the Public Health Service Act (42 U.S.C. 273).

■ 18. Section 486.302 is amended by revising the definition of ''Eligible death'' to read as follows:

§ 486.302 Definitions.

* * * * *

Eligible death. An eligible death for organ donation means the death of a person—

(1) Who is 75 years old or younger;

(2) Who is legally declared dead by neurologic criteria in accordance with State or local law;

(3) Whose body weight is 5 kg or greater;

(4) Whose body mass Index (BMI) is 50 kg/m2 or less;

(5) Who had at least one kidney, liver, heart, or lung that is deemed to meet the eligible data definition as follows:

(i) The kidney would be initially deemed to meet the eligible data definition unless the donor meets one of the following:

(A) Is more than 70 years of age;

(B) Is age 50–69 years with history of Type 1 diabetes for more than 20 years;

(C) Has polycystic kidney disease;

(D) Has glomerulosclerosis equal to or more than 20 percent by kidney biopsy;

(E) Has terminal serum creatinine greater than 4/0 mg/dl;

(F) Has chronic renal failure; or

(G) Has no urine output for at least or more than 24 hours;

(ii) The liver would be initially deemed to meet the eligible data definition unless the donor has one of the following:

(A) Cirrhosis;

(B) Terminal total bilirubin equal to or more than 4 mg/dl;

(C) Portal hypertension;

(D) Macrosteatosis equal to or more than 50 percent or fibrosis equal to or more than stage II;

(E) Fulminant hepatic failure; or

(F) Terminal AST/ALT of more than 700 U/L.

(iii) The heart would be initially deemed to meet the eligible data definition unless the donor meets one of the following:

(A) Is more than 60 years of age;

(B) Is at least or more than 45 years of age with a history of at least or more than 10 years of HTN or at least or more than 10 years of type 1 diabetes;

(C) Has a history of Coronary Artery Bypass Graft (CABG);

(D) Has a history of coronary stent/intervention;

(E) Has a current or past medical history of myocardial infarction (MI);

(F) Has a severe vessel diagnosis as supported by cardiac catheterization (that is more than 50 percent occlusion or 2+ vessel disease);

(G) Has acute myocarditis and/or endocarditis;

(H) Has heart failure due to cardiomyopathy;

(I) Has an internal defibrillator or pacemaker;

(J) Has moderate to severe single valve or 2-valve disease documented by echo or cardiac catheterization, or previous valve repair;

(K) Has serial echo results showing severe global hypokinesis;

(L) Has myxoma; or

(M) Has congenital defects (whether surgically corrected or not).

(iv) The lung would be initially deemed to meet the eligible data definition unless the donor meets one of the following:

(A) Is more than 65 years of age;

(B) Is diagnosed with coronary obstructive pulmonary disease (COPD) (for example, emphysema);

(C) Has terminal PaO2/FiO2 less than 250 mmHg;

(D) Has asthma (with daily prescription);

(E) Asthma is the cause of death;

(F) Has pulmonary fibrosis;

(G) Has previous lobectomy;

(H) Has multiple blebs documented on Computed Axial Tomography (CAT) Scan;

(I) Has pneumonia as indicated on Computed Tomography (CT), X-ray, bronchoscopy, or cultures;

(J) Has bilateral severe pulmonary contusions as per CT.

(6) If a deceased person meets the criteria specified in paragraphs (1) through (5) of this definition, the death of the person would be classified as an eligible death, unless the donor meets any of the following criteria:

(i) The donor was taken to the operating room with the intent for the OPO to recover organs for transplant and all organs were deemed not medically suitable for transplantation; or

(ii) The donor exhibits any of the following active infections (specific diagnoses) of—

(A) Bacterial: Tuberculosis, Gangrenous bowel or perforated bowel or intra-abdominal sepsis;

(B) Viral: HIV infection by serologic or molecular detection, Rabies, Reactive Hepatitis B Surface Antigen, Retroviral infections including Viral Encephalitis or Meningitis, Active Herpes simplex, varicella zoster, or cytomegalovirus viremia or pneumonia, Acute Epstein Barr Virus (mononucleosis), West Nile (c) Virus infection, SARS, except as provided in paragraph (8) of this definition.

(C) Fungal: Active infection with Cryptococcus, Aspergillus, Histoplasma, Coccidioides, Active candidemia or invasive yeast infection;

(D) Parasites: Active infection with Trypanosoma cruzi (Chagas'), Leishmania, Strongyloides, or Malaria (Plasmodium sp.); or

(E) Prion: Creutzfeldt-Jacob Disease.

(7) The following are general exclusions:

(i) Aplastic anemia, Agranulocytosis;

(ii) Current malignant neoplasms except non-melanoma skin cancers such as basal cell and squamous cell cancer and primary CNS tumors without evident metastatic disease;

(iii) Previous malignant neoplasms with current evident metastatic disease;

(iv) A history of melanoma;

(v) Hematologic malignancies: Leukemia, Hodgkin's Disease, Lymphoma, Multiple Myeloma;

(vi) Active Fungal, Parasitic, Viral, or Bacterial Meningitis or Encephalitis; and

(vii) No discernable cause of death.

(8) Notwithstanding paragraph (6)(ii)(B) of this definition, an HIV positive organ procured for the purpose of transplantation into an HIV positive recipient would be an exception to an active infection rule out, consistent with the HIV Organ Policy Equity Act (the Hope Act).

* * * * *

■ 19. Section 486.318 is amended by revising paragraphs (a)(3) and (b)(3) to read as follows:

§ 486.318 Condition: Outcome measures.

(a) * * *

(3) The OPO data reports, averaged over the 4 years of the recertification cycle, must meet the rules and requirements of the most current OPTN aggregate donor yield measure.

(i) The initial criteria used to identify OPOs with lower than expected organ yield, for all organs as well as for each organ type, will include all of the following:

(A) More than 10 fewer observed organs per 100 donors than expected yield (Observed per 100 donors—Expected per 100 donors < -10);

(B) A ratio of observed to expected yield less than 0.90; and

(C) A two-sided p-value is less than 0.05.

(ii) The number of organs used for research per donor, including pancreata used for islet cell research.

(b) * * *

(3) The OPO data reports, averaged over the 4 years of the recertification cycle, must meet the rules and requirements of the most current OPTN aggregate donor yield measure.

(i) The initial criteria used to identify OPOs with lower than expected organ yield, for all organs as well as for each organ type, will include all of the following:

(A) More than 10 fewer observed organs per 100 donors than expected yield (Observed per 100 donors—Expected per 100 donors < -10);

(B) A ratio of observed to expected yield less than 0.90; and

(C) A two-sided p-value is less than 0.05.

(ii) The number of organs used for research per donor, including pancreata used for islet cell research.

* * * * *

■ 20. Section 486.346 is amended by revising paragraph (b) to read as follows:

§ 486.346 Condition: Organ preparation and transport.

* * * * *

(b)(1) The OPO must send complete documentation of donor information to the transplant center with the organ, including donor evaluation, the complete record of the donor's management, documentation of consent, documentation of the pronouncement of death, and documentation for determining organ quality. This information is available to the transplant center electronically.

(2) The OPO must physically send a paper copy of the following documentation with each organ:

(i) Blood type;

(ii) Blood subtype, if used for allocation; and

(iii) Infectious disease testing results available at the time of organ packaging.

(3) The source documentation must be placed in a watertight container in *either* of the following:

(i) A location specifically designed for documentation; or

(ii) Between the inner and external transport materials.

(4) Two individuals, one of whom must be an OPO employee, must verify that the documentation that accompanies an organ to a transplant center is correct.

* * * * *

PART 488—SURVEY, CERTIFICATION, AND ENFORCEMENT PROCEDURES

■ 21. The authority citation for part 488 continues to read as follows:

Authority: Secs. 1102, 1128l, 1864, 1865, 1871 and 1875 of the Social Security Act, unless otherwise noted (42 U.S.C. 1302, 1320a–7j, 1395aa, 1395bb, 1395hh) and 1395ll.

■ 22. Section 488.61 is amended by revising paragraphs (f)(1) introductory text, (f)(3), and (h)(2) to read as follows:

§ 488.61 Special procedures for approval and re-approval of organ transplant centers.

* * * * *

(f) * * *

(1) *Factors.* Except for situations of immediate jeopardy or deficiencies other than failure to meet requirements of § 482.80 or § 482.82 of this chapter, CMS will consider such mitigating factors as may be appropriate in light of the nature of the deficiency and circumstances, including (but not

limited to) the following, in making a decision of initial and re-approval of a transplant center that does not meet the data submission, clinical experience, or outcome requirements:

* * * * *

(3) *Timing.* Within 14 calendar days after CMS has issued formal written notice of a condition-level deficiency to the program, CMS must receive notification of the program's intent to seek mitigating factors approval or re-approval, and receive all information for consideration of mitigating factors within 120 calendar days of the CMS written notification for a deficiency due to data submission, clinical experience or outcomes at § 482.80 or § 482.82 of this chapter. Failure to meet these timeframes may be the basis for denial of mitigating factors. However, CMS may permit an extension of the timeline for good cause, such as a declared public health emergency.

* * * * *

(h) * * *

(2) *Timeframe.* A Systems Improvement Agreement will be established for up to a 12-month period, subject to CMS' discretion to determine if a shorter timeframe may suffice. At the hospital's request, CMS may extend the agreement for up to an additional 6-month period. A signed Systems Improvement Agreement remains in force even if a subsequent SRTR report indicates that the program has restored compliance with the CMS conditions of participation, except that CMS in its sole discretion may shorten the timeframe or allow modification to any portion of the elements of the Agreement in such a case.

PART 495—STANDARDS FOR THE ELECTRONIC HEALTH RECORD TECHNOLOGY INCENTIVE PROGRAM

■ 23. The authority citation for part 495 continues to read as follows:

Authority: Secs. 1102 and 1871 of the Social Security Act (42 U.S.C. 1302 and 1395hh).

■ 24. Section 495.4 is amended—

■ a. In the definition of ''EHR reporting period'', by revising paragraphs (1)(ii)(B)(*2*), (1)(ii)(C)(*2*), (2)(ii)(B)(*2*), and (2)(ii)(C)(*2*).

■ b. In the definition of ''EHR reporting period for a payment adjustment year'', by revising paragraphs (1)(ii)(B)(*2*), (2)(ii)(B)(*2*), (2)(ii)(C)(*3*), and (3)(ii)(B)(*2*), and (3)(ii)(C)(*3*).

The revisions read as follows:

§ 495.4 Definitions.

* * * * *

EHR reporting period. * * *

(1) * * *

(ii) * * *

(B) * * *

(*2*) For the EP who has successfully demonstrated he or she is a meaningful EHR user in any prior year, any continuous 90-day period within CY 2016.

(C) * * *

(*2*) For the EP who has successfully demonstrated he or she is a meaningful EHR user in any prior year, any continuous 90-day period within CY 2017.

* * * * *

(2) * * *

(ii) * * *

(B) * * *

(*2*) For the eligible hospital or CAH that has successfully demonstrated it is a meaningful EHR user in any prior year, any continuous 90-day period within CY 2016.

(C) * * *

(*2*) For the eligible hospital or CAH that has successfully demonstrated it is a meaningful EHR user in any prior year, any continuous 90-day period within CY 2017.

* * * * *

EHR reporting period for a payment adjustment year. * * *

(1) * * *

(ii) * * *

(B) * * *

(*2*) If in a prior year an EP has successfully demonstrated he or she is a meaningful EHR user, the EHR reporting period is any continuous 90-day period within CY 2016 and applies for the CY 2018 payment adjustment year.

* * * * *

(2) * * *

(ii) * * *

(B) * * *

(*2*) If in a prior year an eligible hospital has successfully demonstrated it is a meaningful EHR user, the EHR reporting period is any continuous 90-day period within CY 2016 and applies for the FY 2018 payment adjustment year.

(C) * * *

(*3*) If in a prior year an eligible hospital has successfully demonstrated it is a meaningful EHR user, the EHR reporting period is any continuous 90-day period within CY 2017 and applies for the FY 2019 payment adjustment year.

* * * * *

(3) * * *

(ii) * * *

(B) * * *

(*2*) If in a prior year a CAH has successfully demonstrated it is a meaningful EHR user, the EHR reporting period is any continuous 90-day period within CY 2016 and applies for the FY 2016 payment adjustment year.

(C) * * *

(*3*) If in a prior year a CAH has successfully demonstrated it is a meaningful EHR user, the EHR reporting period is any continuous 90-day period within CY 2017 and applies for the FY 2017 payment adjustment year.

* * * * *

■ 25. Section 495.22 is amended by revising paragraphs (a), (c)(1), (d)(1), and the paragraph (e) heading, and adding paragraph (f) to read as follows:

§ 495.22 Meaningful use objectives and measures for EPs, eligible hospitals, and CAHs for 2015 through 2017.

(a) *General rules.* (1) Subject to the provisions of paragraph (a)(2) of this section, the criteria specified in this section are applicable for EPs, eligible hospitals, and CAHs for 2015 through 2017.

(2) For 2017 only, EPs, eligible hospitals, and CAHs that have successfully demonstrated meaningful use in a prior year have the option to use the criteria specified for 2018 in § 495.24 instead of the criteria specified for 2017 under paragraphs (e) and (f) of this section.

* * * * *

(c) * * *

(1) *General rule regarding criteria for meaningful use for 2015 through 2017 for eligible hospitals and CAHs.* Except as specified in paragraph (c)(2) of this section, eligible hospitals and CAHs attesting to CMS must meet all objectives and associated measures of the meaningful use criteria specified under paragraph (e) of this section to meet the definition of a meaningful EHR user in 2015 and 2016 and must meet all objectives and associated measures of the meaningful use criteria specified under paragraph (f) of this section to meet the definition of a meaningful EHR user in 2017. Except as specified in paragraph (c)(2) of this section, eligible hospitals and CAHs attesting to a State for the Medicaid EHR Incentive Program must meet all objectives and associated measures of the meaningful use criteria specified under paragraph (e) of this section to meet the definition of a meaningful EHR user in 2015 through 2017.

* * * * *

(d) * * *

(1) If a measure (or associated objective) in paragraph (e) or (f) of this section references this paragraph (d), the measure may be calculated by reviewing only the actions for patients whose records are maintained using CEHRT. A

patient's record is maintained using CEHRT if sufficient data were entered in the CEHRT to allow the record to be saved, and not rejected due to incomplete data.

* * * * *

(e) *Meaningful use objectives and measures for EPs for 2015 through 2017, for eligible hospitals and CAHs attesting to CMS for 2015 and 2016, and for eligible hospitals and CAHs attesting to a State for the Medicaid EHR Incentive Program for 2015 through 2017.*

* * * * *

(f) *Meaningful use objectives and measures for eligible hospitals and CAHs attesting to CMS for 2017.*—(1) *Protect patient health information*—(i) *Objective.* Protect electronic protected health information created or maintained by the CEHRT through the implementation of appropriate technical capabilities.

(ii) *Security risk analysis measure.* Conduct or review a security risk analysis in accordance with the requirements under 45 CFR 164.308(a)(1), including addressing the security (to include encryption) of ePHI created or maintained in CEHRT in accordance with requirements under 45 CFR 164.312(a)(2)(iv) and 45 CFR 164.306(d)(3), and implement security updates as necessary, and correct identified security deficiencies as part of the eligible hospital's or CAH's risk management process.

(2) [Reserved]

(3) [Reserved]

(4) *Electronic Prescribing*—(i) *Objective.* Generate and transmit permissible discharge prescriptions electronically (eRx).

(ii) *e-Prescribing measure.* Subject to the provisions of paragraph (d) of this section, more than 10 percent of hospital discharge medication orders for permissible prescriptions are queried for a drug formulary and transmitted electronically using CEHRT.

(iii) *Exclusion for nonapplicable objectives.* Subject to the provisions of paragraph (c)(2) of this section, any eligible hospital or CAH that does not have an internal pharmacy that can accept electronic prescriptions and is not located within 10 miles of any pharmacy that accepts electronic prescriptions at the start of their EHR reporting period.

(5) *Health Information Exchange*—(i) *Objective.* The eligible hospital or CAH who transitions a patient to another setting of care or provider of care or refers a patient to another provider of care provides a summary care record for each transition of care or referral.

(ii) *Health information exchange measure.* Subject to the provisions of paragraph (d) of this section, the eligible hospital or CAH that transitions or refers their patient to another setting of care or provider of care must do the following:

(A) Use CEHRT to create a summary of care record; and

(B) Electronically transmit such summary to a receiving provider for more than 10 percent of transitions of care and referrals.

(6) *Patient specific education*—(i) *Objective.* Use clinically relevant information from CEHRT to identify patient-specific education resources and provide those resources to the patient.

(ii) *Patient-specific education measure.* More than 10 percent of all unique patients admitted to the eligible hospital's or CAH's inpatient or emergency department (POS 21 or 23) are provided patient specific education resources identified by CEHRT.

(7) *Medication reconciliation.*—(i) *Objective.* The eligible hospital or CAH that receives a patient from another setting of care or provider of care or believes an encounter is relevant performs medication reconciliation.

(ii) *Medication reconciliation measure.* Subject to the provisions of paragraph (d) of this section, the eligible hospital or CAH performs medication reconciliation for more than 50 percent of transitions of care in which the patient is admitted to the eligible hospital's or CAH's inpatient or emergency department (POS 21 or 23).

(8) *Patient electronic access*—(i) *Objective.* Provide patients the ability to view online, download, and transmit information within 36 hours of hospital discharge.

(ii) *Measures.* An eligible hospital or CAH must meet the following two measures:

(A) *Provide patient access measure.* More than 50 percent of all unique patients who are discharged from the inpatient or emergency department (POS 21 or 23) of an eligible hospital or CAH have timely access to view online, download, and transmit to a third party their health information.

(B) *View, download or transmit (VDT) measure.* At least 1 patient (or patient-authorized representative) who is discharged from the inpatient or emergency department (POS 21 or 23) of an eligible hospital or CAH during the EHR reporting period views, downloads, or transmits to a third party his or her information during the EHR reporting period.

(iii) *Exclusion for nonapplicable objectives.* Subject to the provisions of paragraph (c)(2) of this section, any eligible hospital or CAH that is located in a county that does not have 50 percent or more of its housing units with 4Mbps broadband availability according to the latest information available from the FCC on the first day of the EHR reporting period is excluded from paragraph (f)(8)(ii)(B) of this section.

(9) *Public health reporting*—(i) *Objective.* The eligible hospital or CAH is in active engagement with a public health agency to submit electronic public health data from CEHRT, except where prohibited, and in accordance with applicable law and practice.

(ii) *Measures.* In order to meet the objective under paragraph (f)(9)(i) of this section, an eligible hospital or CAH must choose from measures 1 through 4 (as described in paragraphs (f)(9)(ii)(A) through (D) of this section).

(A) *Immunization registry reporting measure.* The eligible hospital or CAH is in active engagement with a public health agency to submit immunization data.

(B) *Syndromic surveillance reporting measure.* The eligible hospital or CAH is in active engagement with a public health agency to submit syndromic surveillance data.

(C) *Specialized registry reporting measure.* The eligible hospital or CAH is in active engagement to submit data to a specialized registry.

(D) *Electronic reportable laboratory result reporting measure.* The eligible hospital or CAH is in active engagement with a public health agency to submit electronic reportable laboratory results.

(iii) *Exclusions for non-applicable objectives.* Subject to the provisions of paragraph (c)(2) of this section—

(A) Any eligible hospital or CAH meeting one or more of the following criteria may be excluded from the immunization measure specified in paragraph (f)(9)(ii)(A) of this section if the eligible hospital or CAH—

(*1*) Does not administer any immunizations to any of the populations for which data is collected by its jurisdiction's immunization registry or immunization information system during the EHR reporting period.

(*2*) Operates in a jurisdiction for which no immunization registry or immunization information system is capable of accepting the specific standards required to meet the CEHRT definition at the start of the EHR reporting period.

(*3*) Operates in a jurisdiction where no immunization registry or immunization information system has declared readiness to receive immunization data from the eligible hospital or CAH at the start of the EHR reporting period.

(B) Any eligible hospital or CAH meeting one or more of the following criteria may be excluded from the syndromic surveillance measure specified in paragraph (f)(9)(ii)(B) of this section if the eligible hospital or CAH—

(*1*) Does not have an emergency or urgent care department.

(*2*) Operates in a jurisdiction for which no public health agency is capable of receiving electronic syndromic surveillance data from eligible hospitals or CAHs in the specific standards required to meet the CEHRT definition at the start of the EHR reporting period.

(*3*) Operates in a jurisdiction where no public health agency has declared readiness to receive syndromic surveillance data from eligible hospitals or CAHs at the start of the EHR reporting period.

(C) Any eligible hospital or CAH meeting one or more of the following criteria may be excluded from the specialized registry measure specified in paragraph (f)(9)(ii)(C) of this section if the eligible hospital or CAH—

(*1*) Does not diagnose or directly treat any disease associated with or collect relevant data is required by a specialized registry for which the eligible hospital or CAH is eligible in their jurisdiction.

(*2*) Operates in a jurisdiction for which no specialized registry is capable of accepting electronic registry transactions in the specific standards required to meet the CEHRT definition at the start of the EHR reporting period; or

(*3*) Operates in a jurisdiction where no specialized registry for which the eligible hospital or CAH is eligible has declared readiness to receive electronic registry transactions at the beginning of the EHR reporting period.

(D) Any eligible hospital or CAH meeting one or more of the following criteria may be excluded from the electronic reportable laboratory result reporting measure specified in paragraph (f)(9)(ii)(D) of this section if the eligible hospital or CAH—

(*1*) Does not perform or order laboratory tests that are reportable in the eligible hospital's or CAH's jurisdiction during the EHR reporting period.

(*2*) Operates in a jurisdiction for which no public health agency that is capable of accepting the specific ELR standards required to meet the CEHRT definition at the start of the EHR reporting period.

(*3*) Operates in a jurisdiction where no public health agency has declared readiness to receive electronic reportable laboratory results from eligible hospitals or CAHs at the start of the EHR reporting period.

■ 26. Section 495.24 is revised to read as follows:

§ 495.24 Stage 3 meaningful use objectives and measures for EPs, eligible hospitals and CAHs for 2018 and subsequent years.

The criteria specified in paragraphs (c) and (d) of this section are optional for 2017 for EPs, eligible hospitals, and CAHs that have successfully demonstrated meaningful use in a prior year. The criteria specified in paragraph (c) of this section are applicable for eligible hospitals and CAHs attesting to CMS for 2018. The criteria specified in paragraph (d) of this section are applicable for all EPs for 2018 and subsequent years, and for eligible hospitals and CAHs attesting to a State for the Medicaid EHR Incentive Program for 2018.

(a) *Stage 3 criteria for EPs*—(1) *General rule regarding Stage 3 criteria for meaningful use for EPs.* Except as specified in paragraphs (a)(2) and (3) of this section, EPs must meet all objectives and associated measures of the Stage 3 criteria specified in paragraph (d) of this section to meet the definition of a meaningful EHR user.

(2) *Selection of measures for specified objectives in paragraph (d) of this section.* An EP may meet the criteria for 2 out of the 3 measures associated with an objective, rather than meeting the criteria for all 3 of the measures, if the EP meets all of the following requirements:

(i) Must ensure that the objective in paragraph (d) of this section includes an option to meet 2 out of the 3 associated measures.

(ii) Meets the threshold for 2 out of the 3 measures for that objective.

(iii) Attests to all 3 of the measures for that objective.

(3) *Exclusion for non-applicable objectives and measures.* (i) An EP may exclude a particular objective that includes an option for exclusion contained in paragraph (d) of this section, if the EP meets all of the following requirements:

(A) Meets the criteria in the applicable objective that would permit the exclusion.

(B) Attests to the exclusion.

(ii) An EP may exclude a measure within an objective which allows for a provider to meet the threshold for 2 of the 3 measures, as outlined in paragraph (a)(2) of this section, in the following manner:

(A)(*1*) Meets the criteria in the applicable measure or measures that would permit the exclusion; and

(*2*) Attests to the exclusion or exclusions.

(B)(*1*) Meets the threshold; and

(*2*) Attests to any remaining measure or measures.

(4) *Exception for Medicaid EPs who adopt, implement or upgrade in their first payment year.* For Medicaid EPs who adopt, implement, or upgrade its CEHRT in their first payment year, the meaningful use objectives and associated measures of the Stage 3 criteria specified in paragraph (d) of this section apply beginning with the second payment year, and do not apply to the first payment year.

(5) *Objectives and associated measures in paragraph (d) of this section that rely on measures that count unique patients or actions.* (i) If a measure (or associated objective) in paragraph (d) of this section references paragraph (a)(5) of this section, the measure may be calculated by reviewing only the actions for patients whose records are maintained using CEHRT. A patient's record is maintained using CEHRT if sufficient data were entered in the CEHRT to allow the record to be saved, and not rejected due to incomplete data.

(ii) If the objective and associated measure does not reference paragraph (a)(5) of this section, the measure must be calculated by reviewing all patient records, not just those maintained using CEHRT.

(b) *Stage 3 criteria for meaningful use for eligible hospitals and CAHs*—(1) *General rule.* Except as specified in paragraphs (b)(2) and (3) of this section, eligible hospitals and CAHs must meet all objectives and associated measures of the Stage 3 criteria specified in paragraphs (c) and (d) of this section, as applicable, to meet the definition of a meaningful EHR user.

(2) *Selection of measures for specified objectives in paragraphs (c) and (d) of this section.* An eligible hospital or CAH may meet the criteria for 2 out of the 3 measures associated with an objective, rather than meeting the criteria for all 3 of the measures, if the eligible hospital or CAH meets all of the following requirements:

(i) Must ensure that the objective in paragraph (c) or (d) of this section, as applicable, includes an option to meet 2 out of the 3 associated measures.

(ii) Meets the threshold for 2 out of the 3 measures for that objective.

(iii) Attests to all 3 of the measures for that objective.

(3) *Exclusion for nonapplicable objectives and measures.* (i) An eligible hospital or CAH may exclude a particular objective that includes an option for exclusion contained in

paragraph (c) or (d) of this section, as applicable, if the eligible hospital or CAH meets all of the following requirements:

(A) Meets the criteria in the applicable objective that would permit the exclusion.

(B) Attests to the exclusion.

(ii) An eligible hospital or CAH may exclude a measure within an objective which allows for a provider to meet the threshold for 2 of the 3 measures, as outlined in paragraph (b)(2) of this section, in the following manner:

(A)(*1*) Meets the criteria in the applicable measure or measures that would permit the exclusion; and

(*2*) Attests to the exclusion or exclusions.

(B)(*1*) Meets the threshold; and

(*2*) Attests to any remaining measure or measures.

(4) *Exception for Medicaid eligible hospitals or CAHs that adopt, implement or upgrade in their first payment year.* For Medicaid eligible hospitals or CAHs that adopt, implement or upgrade CEHRT in their first payment year, the meaningful use objectives and associated measures of the Stage 3 criteria specified in paragraph (c) or (d) of this section apply beginning with the second payment year, and do not apply to the first payment year.

(5) *Objectives and associated measures in paragraph (c) or (d) of this section that rely on measures that count unique patients or actions.* (i) If a measure (or associated objective) in paragraph (c) or (d) of this section, as applicable, references paragraph (b)(5) of this section, the measure may be calculated by reviewing only the actions for patients whose records are maintained using CEHRT. A patient's record is maintained using CEHRT if sufficient data were entered in the CEHRT to allow the record to be saved, and not rejected due to incomplete data.

(ii) If the objective and associated measure does not reference this paragraph (b)(5) of this section, the measure must be calculated by reviewing all patient records, not just those maintained using CEHRT.

(c) *Stage 3 objectives and measures for eligible hospitals and CAHs attesting to CMS for 2018.*—(1) *Protect patient health information.* (i) *Objective.* Protect electronic protected health information (ePHI) created or maintained by the CEHRT through the implementation of appropriate technical, administrative, and physical safeguards.

(ii) *Security risk analysis measure.* Conduct or review a security risk analysis in accordance with the requirements under 45 CFR 164.308(a)(1), including addressing the security (including encryption) of data created or maintained by CEHRT in accordance with requirements under 45 CFR 164.312(a)(2)(iv) and 45 CFR 164.306(d)(3), implement security updates as necessary, and correct identified security deficiencies as part of the provider's risk management process.

(2) *Electronic prescribing.*—(i) *Objective.* Generate and transmit permissible discharge prescriptions electronically (eRx).

(ii) *e-Prescribing measure.* Subject to paragraph (b)(5) of this section, more than 25 percent of hospital discharge medication orders for permissible prescriptions (for new and changed prescriptions) are queried for a drug formulary and transmitted electronically using CEHRT.

(iii) *Exclusions in accordance with paragraph (b)(3) of this section.* Any eligible hospital or CAH that does not have an internal pharmacy that can accept electronic prescriptions and there are no pharmacies that accept electronic prescriptions within 10 miles at the start of the eligible hospital or CAH's EHR reporting period.

(3) [Reserved]

(4) [Reserved]

(5) *Patient electronic access to health information.*—(i) *Objective.* The eligible hospital or CAH provides patients (or patient-authorized representative) with timely electronic access to their health information and patient-specific education.

(ii) *Measures.* Eligible hospitals and CAHs must meet the following two measures:

(A) *Provide patient access measure.* For more than 50 percent of all unique patients discharged from the eligible hospital or CAH inpatient or emergency department (POS 21 or 23):

(*1*) The patient (or patient-authorized representative) is provided timely access to view online, download, and transmit his or her health information; and

(*2*) The provider ensures the patient's health information is available for the patient (or patient-authorized representative) to access using any application of their choice that is configured to meet the technical specifications of the API in the provider's CEHRT.

(B) *Patient-specific education measure.* The eligible hospital or CAH must use clinically relevant information from CEHRT to identify patient-specific educational resources and provide electronic access to those materials to more than 10 percent of unique patients discharged from the eligible hospital or CAH inpatient or emergency department (POS 21 or 23) during the EHR reporting period.

(iii) *Exclusion in accordance with paragraph (b)(3) of this section.* Any eligible hospital or CAH that is located in a county that does not have 50 percent or more of its housing units with 4Mbps broadband availability according to the latest information available from the FCC on the first day of the EHR reporting period is excluded from the measures specified in paragraphs (c)(5)(ii)(A) and (B) of this section.

(6) *Coordination of care through patient engagement.*—(i) *Objective.* Use CEHRT to engage with patients or their authorized representatives about the patient's care.

(ii) *Measures.* In accordance with paragraph (b)(2) of this section, an eligible hospital or CAH must satisfy 2 of the 3 following measures in paragraphs (c)(6)(ii)(A), (B), and (C) of this section, except those measures for which an eligible hospital or CAH qualifies for an exclusion under paragraph (b)(3) of this section.

(A) *View, download or transmit (VDT) measure.* During the EHR reporting period, at least one unique patient (or their authorized representatives) discharged from the eligible hospital or CAH inpatient or emergency department (POS 21 or 23) actively engage with the electronic health record made accessible by the provider and one of the following:

(*1*) View, download or transmit to a third party their health information.

(*2*) Access their health information through the use of an API that can be used by applications chosen by the patient and configured to the API in the provider's CEHRT; or

(*3*) A combination of paragraphs (c)(6)(ii)(A)(*1*) and (*2*) of this section.

(B) *Secure messaging measure.* During the EHR reporting period, more than 5 percent of all unique patients discharged from the eligible hospital or CAH inpatient or emergency department (POS 21 or 23) during the EHR reporting period, a secure message was sent using the electronic messaging function of CEHRT to the patient (or the patient authorized representative), or in response to a secure message sent by the patient (or the patient authorized representative).

(C) *Patient generated health data.* Patient generated health data or data from a non-clinical setting is incorporated into the CEHRT for more than 5 percent of unique patients discharged from the eligible hospital or CAH inpatient or emergency department

(POS 21 or 23) during the EHR reporting period.

(iii) *Exclusions under paragraph (b)(3) of this section.* Any eligible hospital or CAH operating in a location that does not have 50 percent or more of its housing units with 4Mbps broadband availability according to the latest information available from the FCC on the first day of the EHR reporting period may exclude from the measures specified in paragraphs (c)(6)(ii)(A) through (C) of this section.

(7) *Health information exchange*—(i) *Objective.* The eligible hospital or CAH provides a summary of care record when transitioning or referring their patient to another setting of care, receives or retrieves a summary of care record upon the receipt of a transition or referral or upon the first patient encounter with a new patient, and incorporates summary of care information from other providers into their EHR using the functions of CEHRT.

(ii) *Measures.* In accordance with paragraph (b)(2) of this section, a eligible hospital or CAH must attest to all 3 measures, but must meet the threshold for 2 of the 3 measures in paragraphs (e)(7)(ii)(A) through (C) of this section. Subject to paragraph (b)(5) of this section—

(A) *Send a summary of care measure.* For more than 10 percent of transitions of care and referrals, the eligible hospital or CAH that transitions or refers its patient to another setting of care or provider of care—

(*1*) Creates a summary of care record using CEHRT; and

(*2*) Electronically exchanges the summary of care record.

(B) *Request/accept summary of care measure.* For more than 10 percent of transitions or referrals received and patient encounters in which the provider has never before encountered the patient, the eligible hospital or CAH incorporates into the patient's EHR an electronic summary of care document.

(C) *Clinical information reconciliation measure.* For more than 50 percent of transitions or referrals received and patient encounters in which the provider has never before encountered the patient, the eligible hospital or CAH performs a clinical information reconciliation. The provider must implement clinical information reconciliation for the following three clinical information sets:

(*1*) *Medication.* Review of the patient's medication, including the name, dosage, frequency, and route of each medication.

(*2*) *Medication allergy.* Review of the patient's known allergic medications.

(*3*) *Current problem list.* Review of the patient's current and active diagnoses.

(iii) *Exclusions in accordance with paragraph (b)(3) of this section.* (A) Any eligible hospital or CAH for whom the total of transitions or referrals received and patient encounters in which the provider has never before encountered the patient, is fewer than 100 during the EHR reporting period may be excluded from paragraphs (c)(7)(ii)(B) and (C) of this section.

(B) Any eligible hospital or CAH operating in a location that does not have 50 percent or more of its housing units with 4Mbps broadband availability according to the latest information available from the FCC on the first day of the EHR reporting period may be excluded from the measures specified in paragraphs (e)(7)(ii)(A) and (B) of this section.

(8) *Public health and clinical data registry reporting*—(i) *Objective.* The eligible hospital or CAH is in active engagement with a public health agency (PHA) or clinical data registry (CDR) to submit electronic public health data in a meaningful way using CEHRT, except where prohibited, and in accordance with applicable law and practice.

(ii) *Measures.* In order to meet the objective under paragraph (c)(8)(i) of this section, an eligible hospital or CAH must choose from measures 1 through 6 (as described in paragraphs (c)(8)(ii)(A) through (F) of this section) and must successfully attest to any combination of three measures. These measures may be met by any combination, including meeting the measure specified in paragraphs (c)(8)(ii)(D) and (E) of this section multiple times, in accordance with applicable law and practice:

(A) *Immunization registry reporting measure.* The eligible hospital or CAH is in active engagement with a public health agency to submit immunization data and receive immunization forecasts and histories from the public health immunization registry/immunization information system (IIS).

(B) *Syndromic surveillance reporting measure.* The eligible hospital or CAH is in active engagement with a public health agency to submit syndromic surveillance data from an urgent care setting.

(C) *Electronic case reporting measure.* The eligible hospital or CAH is in active engagement with a public health agency to submit case reporting of reportable conditions.

(D) *Public health registry reporting measure.* The eligible hospital or CAH is in active engagement with a public health agency to submit data to public health registries.

(E) *Clinical data registry reporting measure.* The eligible hospital or CAH is in active engagement to submit data to a clinical data registry.

(F) *Electronic reportable laboratory result reporting measure.* The eligible hospital or CAH is in active engagement with a public health agency to submit electronic reportable laboratory results.

(iii) *Exclusions in accordance with paragraph (b)(3) of this section.* (A) Any eligible hospital or CAH meeting one or more of the following criteria may be excluded from the immunization registry reporting measure specified in paragraph (c)(8)(ii)(A) of this section if the eligible hospital or CAH—

(*1*) Does not administer any immunizations to any of the populations for which data is collected by its jurisdiction's immunization registry or immunization information system during the EHR reporting period.

(*2*) Operates in a jurisdiction for which no immunization registry or immunization information system is capable of accepting the specific standards required to meet the CEHRT definition at the start of the EHR reporting period.

(*3*) Operates in a jurisdiction where no immunization registry or immunization information system has declared readiness to receive immunization data as of 6 months prior to the start of the EHR reporting period.

(B) Any eligible hospital or CAH meeting one or more of the following criteria may be excluded from the syndromic surveillance reporting measure specified in paragraph (c)(8)(ii)(B) of this section if the eligible hospital or CAH—

(*1*) Does not have an emergency or urgent care department.

(*2*) Operates in a jurisdiction for which no public health agency is capable of receiving electronic syndromic surveillance data in the specific standards required to meet the CEHRT definition at the start of the EHR reporting period.

(*3*) Operates in a jurisdiction where no public health agency has declared readiness to receive syndromic surveillance data from eligible hospitals or CAHs as of 6 months prior to the start of the EHR reporting period.

(C) Any eligible hospital or CAH meeting one or more of the following criteria may be excluded from the case reporting measure specified in paragraph (e)(8)(ii)(C) of this section if the eligible hospital or CAH—

(*1*) Does not treat or diagnose any reportable diseases for which data is collected by their jurisdiction's reportable disease system during the EHR reporting period.

(*2*) Operates in a jurisdiction for which no public health agency is capable of receiving electronic case reporting data in the specific standards required to meet the CEHRT definition at the start of their EHR reporting period.

(*3*) Operates in a jurisdiction where no public health agency has declared readiness to receive electronic case reporting data as of 6 months prior to the start of the EHR reporting period.

(D) Any eligible hospital or CAH meeting at least one of the following criteria may be excluded from the public health registry reporting measure specified in paragraph (c)(8)(ii)(D) of this section if the eligible hospital or CAH—

(*1*) Does not diagnose or directly treat any disease or condition associated with a public health registry in its jurisdiction during the EHR reporting period.

(*2*) Operates in a jurisdiction for which no public health agency is capable of accepting electronic registry transactions in the specific standards required to meet the CEHRT definition at the start of the EHR reporting period.

(*3*) Operates in a jurisdiction where no public health registry for which the eligible hospital or CAH is eligible has declared readiness to receive electronic registry transactions as of 6 months prior to the start of the EHR reporting period.

(E) Any eligible hospital or CAH meeting at least one of the following criteria may be excluded from the clinical data registry reporting measure specified in paragraph (c)(8)(ii)(E) of this section if the eligible hospital or CAH—

(*1*) Does not diagnose or directly treat any disease or condition associated with a clinical data registry in their jurisdiction during the EHR reporting period.

(*2*) Operates in a jurisdiction for which no clinical data registry is capable of accepting electronic registry transactions in the specific standards required to meet the CEHRT definition at the start of the EHR reporting period.

(*3*) Operates in a jurisdiction where no clinical data registry for which the eligible hospital or CAH is eligible has declared readiness to receive electronic registry transactions as of 6 months prior to the start of the EHR reporting period.

(F) Any eligible hospital or CAH meeting one or more of the following criteria may be excluded from the electronic reportable laboratory result reporting measure specified in paragraph (c)(8)(ii)(F) of this section if the eligible hospital or CAH—

(*1*) Does not perform or order laboratory tests that are reportable in its jurisdiction during the EHR reporting period.

(*2*) Operates in a jurisdiction for which no public health agency that is capable of accepting the specific ELR standards required to meet the CEHRT definition at the start of the EHR reporting period.

(*3*) Operates in a jurisdiction where no public health agency has declared readiness to receive electronic reportable laboratory results from an eligible hospital or CAH as of 6 months prior to the start of the EHR reporting period.

(d) *Stage 3 objectives and measures for all EPs for 2018 and subsequent years, and for eligible hospitals and CAHs attesting to a State for the Medicaid EHR Incentive Program for 2018*—(1) *Protect patient health information*—(i) *EP protect patient health information*—(A) *Objective.* Protect electronic protected health information (ePHI) created or maintained by the CEHRT through the implementation of appropriate technical, administrative, and physical safeguards.

(B) *Measure.* Conduct or review a security risk analysis in accordance with the requirements under 45 CFR 164.308(a)(1), including addressing the security (including encryption) of data created or maintained by CEHRT in accordance with requirements under 45 CFR 164.312(a)(2)(iv) and 45 CFR 164.306(d)(3), implement security updates as necessary, and correct identified security deficiencies as part of the provider's risk management process.

(ii) *Eligible hospital/CAH protect patient health information*—(A) *Objective.* Protect electronic protected health information (ePHI) created or maintained by the CEHRT through the implementation of appropriate technical, administrative, and physical safeguards.

(B) *Measure.* Conduct or review a security risk analysis in accordance with the requirements under 45 CFR 164.308(a)(1), including addressing the security (including encryption) of data created or maintained by CEHRT in accordance with requirements under 45 CFR 164.312(a)(2)(iv) and 45 CFR 164.306(d)(3), implement security updates as necessary, and correct identified security deficiencies as part of the provider's risk management process.

(2) *Electronic Prescribing*—(i) *EP Electronic Prescribing*—(A) *Objective.* Generate and transmit permissible prescriptions electronically (eRx).

(B) *Measure.* Subject to paragraph (a)(5) of this section, more than 60 percent of all permissible prescriptions written by the EP are queried for a drug formulary and transmitted electronically using CEHRT.

(C) *Exclusions in accordance with paragraph (a)(3) of this section.* (*1*) Any EP who writes fewer than 100 permissible prescriptions during the EHR reporting period; or

(*2*) Any EP who does not have a pharmacy within its organization and there are no pharmacies that accept electronic prescriptions within 10 miles of the EP's practice location at the start of his/her EHR reporting period.

(ii) *Eligible hospital/CAH electronic prescribing*—(A) *Objective.* Generate and transmit permissible discharge prescriptions electronically (eRx).

(B) *Measure.* Subject to paragraph (b)(5) of this section, more than 25 percent of hospital discharge medication orders for permissible prescriptions (for new and changed prescriptions) are queried for a drug formulary and transmitted electronically using CEHRT.

(C) *Exclusions in accordance with paragraph (b)(3) of this section.* Any eligible hospital or CAH that does not have an internal pharmacy that can accept electronic prescriptions and there are no pharmacies that accept electronic prescriptions within 10 miles at the start of the eligible hospital or CAH's EHR reporting period.

(3) *Clinical decision support*—(i) *EP clinical decision support*—(A) *Objective.* Implement clinical decision support (CDS) interventions focused on improving performance on high-priority health conditions.

(B) *Measures.* (*1*) Implement five clinical decision support interventions related to four or more clinical quality measures at a relevant point in patient care for the entire EHR reporting period. Absent four clinical quality measures related to an EP's scope of practice or patient population, the clinical decision support interventions must be related to high-priority health conditions; and

(*2*) The EP has enabled and implemented the functionality for drug-drug and drug-allergy interaction checks for the entire EHR reporting period.

(C) *Exclusion in accordance with paragraph (a)(3) of this section for paragraph (d)(3)(i)(B)(2) of this section.* An EP who writes fewer than 100 medication orders during the EHR reporting period.

(ii) *Eligible hospital/CAH clinical decision support*—(A) *Objective.* Implement clinical decision support (CDS) interventions focused on

improving performance on high-priority health conditions.

(B) *Measures*—(*1*) Implement five clinical decision support interventions related to four or more clinical quality measures at a relevant point in patient care for the entire EHR reporting period. Absent four clinical quality measures related to an eligible hospital or CAH's patient population, the clinical decision support interventions must be related to high-priority health conditions; and

(*2*) The eligible hospital or CAH has enabled and implemented the functionality for drug-drug and drug-allergy interaction checks for the entire EHR reporting period.

(4) *Computerized provider order entry (CPOE)*—(i) *EP CPOE*—(A) *Objective.* Use computerized provider order entry (CPOE) for medication, laboratory, and diagnostic imaging orders directly entered by any licensed healthcare professional, credentialed medical assistant, or a medical staff member credentialed to and performing the equivalent duties of a credentialed medical assistant, who can enter orders into the medical record per state, local, and professional guidelines.

(B) *Measures.* Subject to paragraph (a)(5) of this section—

(*1*) More than 60 percent of medication orders created by the EP during the EHR reporting period are recorded using computerized provider order entry;

(*2*) More than 60 percent of laboratory orders created by the EP during the EHR reporting period are recorded using computerized provider order entry; and

(*3*) More than 60 percent of diagnostic imaging orders created by the EP during the EHR reporting period are recorded using computerized provider order entry.

(C) *Exclusions in accordance with paragraph (a)(3) of this section.* (*1*) For the measure specified in paragraph (d)(4)(i)(B)(*1*) of this section, any EP who writes fewer than 100 medication orders during the EHR reporting period.

(*2*) For the measure specified in paragraph (d)(4)(i)(B)(*2*) of this section, any EP who writes fewer than 100 laboratory orders during the EHR reporting period.

(*3*) For the measure specified in paragraph (d)(4)(i)(B)(*3*) of this section, any EP who writes fewer than 100 diagnostic imaging orders during the EHR reporting period.

(ii) *Eligible hospital and CAH CPOE*—(A) *Objective.* Use computerized provider order entry (CPOE) for medication, laboratory, and diagnostic imaging orders directly entered by any licensed healthcare professional, credentialed medical assistant, or a medical staff member credentialed to and performing the equivalent duties of a credentialed medical assistant; who can enter orders into the medical record per State, local, and professional guidelines.

(B) *Measures.* Subject to paragraph (b)(5) of this section—

(*1*) More than 60 percent of medication orders created by authorized providers of the eligible hospital's or CAH's inpatient or emergency department (POS 21 or 23) during the EHR reporting period are recorded using computerized provider order entry;

(*2*) More than 60 percent of laboratory orders created by authorized providers of the eligible hospital's or CAH's inpatient or emergency department (POS 21 or 23) during the EHR reporting period are recorded using computerized provider order entry; and

(*3*) More than 60 percent of diagnostic imaging orders created by authorized providers of the eligible hospital's or CAH's inpatient or emergency department (POS 21 or 23) during the EHR reporting period are recorded using computerized provider order entry.

(5) *Patient electronic access to health information*—(i) *EP patient electronic access to health information*—(A) *Objective.* The EP provides patients (or patient-authorized representative) with timely electronic access to their health information and patient-specific education.

(B) *Measures.* EPs must meet the following two measures:

(*1*) For more than 80 percent of all unique patients seen by the EP—

(*i*) The patient (or the patient-authorized representative) is provided timely access to view online, download, and transmit his or her health information; and

(*ii*) The provider ensures the patient's health information is available for the patient (or patient-authorized representative) to access using any application of their choice that is configured to meet the technical specifications of the API in the provider's CEHRT.

(*2*) The EP must use clinically relevant information from CEHRT to identify patient-specific educational resources and provide electronic access to those materials to more than 35 percent of unique patients seen by the EP during the EHR reporting period.

(C) *Exclusions in accordance with paragraph (a)(3) of this section.* (*1*) Any EP who has no office visits during the reporting period may exclude from the measures specified in paragraphs (d)(5)(i)(B)(*1*) and (*2*) of this section.

(*2*) Any EP that conducts 50 percent or more of his or her patient encounters in a county that does not have 50 percent or more of its housing units with 4Mbps broadband availability according to the latest information available from the FCC on the first day of the EHR reporting period may exclude from the measures specified in paragraphs (d)(5)(i)(B)(*1*) and (*2*) of this section.

(ii) *Eligible hospital and CAH patient electronic access to health information*—(A) *Objective.* The eligible hospital or CAH provides patients (or patient-authorized representative) with timely electronic access to their health information and patient-specific education.

(B) *Measures.* Eligible hospitals and CAHs must meet the following two measures:

(*1*) For more than 80 percent of all unique patients discharged from the eligible hospital or CAH inpatient or emergency department (POS 21 or 23):

(*i*) The patient (or patient-authorized representative) is provided timely access to view online, download, and transmit his or her health information; and

(*ii*) The provider ensures the patient's health information is available for the patient (or patient-authorized representative) to access using any application of their choice that is configured to meet the technical specifications of the API in the provider's CEHRT.

(*2*) The eligible hospital or CAH must use clinically relevant information from CEHRT to identify patient-specific educational resources and provide electronic access to those materials to more than 35 percent of unique patients discharged from the eligible hospital or CAH inpatient or emergency department (POS 21 or 23) during the EHR reporting period.

(C) *Exclusion in accordance with paragraph (b)(3) of this section.* Any eligible hospital or CAH that is located in a county that does not have 50 percent or more of its housing units with 4Mbps broadband availability according to the latest information available from the FCC on the first day of the EHR reporting period is excluded from the measures specified in paragraphs (d)(5)(ii)(B)(*1*) and (*2*) of this section.

(6) *Coordination of care through patient engagement*—(i) *EP coordination of care through patient engagement*—(A) *Objective.* Use CEHRT to engage with patients or their authorized representatives about the patient's care.

(B) *Measures.* In accordance with paragraph (a)(2) of this section, an EP must satisfy 2 out of the 3 following

measures in paragraphs (d)(6)(i)(B)(*1*) through (*3*) of this section except those measures for which an EP qualifies for an exclusion under paragraph (a)(3) of this section.

(*1*) During the EHR reporting period, more than 10 percent of all unique patients (or their authorized representatives) seen by the EP actively engage with the electronic health record made accessible by the provider and either of the following:

(*i*) View, download or transmit to a third party their health information;

(*ii*) their health information through the use of an API that can be used by applications chosen by the patient and configured to the API in the provider's CEHRT; or

(*iii*) A combination of paragraphs (d)(6)(i)(B)(*1*)(*i*) and (*ii*) of this section.

(*iv*) For an EHR reporting period in 2017 only, an EP may meet a threshold of 5 percent instead of 10 percent for the measure at paragraph (d)(6)(i)(B)(*1*) of this section.

(*2*) During the EHR reporting period—

(*i*) For an EHR reporting period in 2017 only, for more than 5 percent of all unique patients seen by the EP during the EHR reporting period, a secure message was sent using the electronic messaging function of CEHRT to the patient (or their authorized representatives), or in response to a secure message sent by the patient; or

(*ii*) For an EHR reporting period other than 2017, for more than 25 percent of all unique patients seen by the EP during the EHR reporting period, a secure message was sent using the electronic messaging function of CEHRT to the patient (or their authorized representatives), or in response to a secure message sent by the patient.

(*3*) Patient generated health data or data from a nonclinical setting is incorporated into the CEHRT for more than 5 percent of all unique patients seen by the EP during the EHR reporting period.

(C) *Exclusions in accordance with paragraph (a)(3) of this section.* (*1*) Any EP who has no office visits during the reporting period may exclude from the measures specified in paragraphs (d)(6)(i)(B)(*1*) through (*3*) of this section.

(*2*) Any EP that conducts 50 percent or more of his or her patient encounters in a county that does not have 50 percent or more of its housing units with 4Mbps broadband availability according to the latest information available from the FCC on the first day of the EHR reporting period may exclude from the measures specified in paragraphs (d)(6)(i)(B)(*1*) through (*3*) of this section.

(ii) *Eligible hospital and CAH coordination of care through patient engagement*—(A) *Objective.* Use CEHRT to engage with patients or their authorized representatives about the patient's care.

(B) *Measures.* In accordance with paragraph (b)(2) of this section, an eligible hospital or CAH must satisfy 2 of the 3 following measures in paragraphs (d)(6)(ii)(B)(*1*) through (*3*) of this section, except those measures for which an eligible hospital or CAH qualifies for an exclusion under paragraph (b)(3) of this section.

(*1*) During the EHR reporting period, more than 10 percent of all unique patients (or their authorized representatives) discharged from the eligible hospital or CAH inpatient or emergency department (POS 21 or 23) actively engage with the electronic health record made accessible by the provider and one of the following:

(*i*) View, download or transmit to a third party their health information.

(*ii*) Access their health information through the use of an API that can be used by applications chosen by the patient and configured to the API in the provider's CEHRT.

(*iii*) A combination of paragraphs (d)(6)(ii)(B)(*1*)(*i*) and (*ii*) of this section.

(*iv*) For an EHR reporting period in 2017, an eligible hospital or CAH may meet a threshold of 5 percent instead of 10 percent for the measure at paragraph (d)(6)(ii)(B)(*1*) of this section.

(*2*) During the EHR reporting period—

(*i*) For an EHR reporting period in 2017 only, for more than 5 percent of all unique patients discharged from the eligible hospital or CAH inpatient or emergency department (POS 21 or 23) during the EHR reporting period, a secure message was sent using the electronic messaging function of CEHRT to the patient (or their authorized representatives), or in response to a secure message sent by the patient (or their authorized representatives).

(*ii*) For an EHR reporting period other than 2017, for more than 25 percent of all unique patients discharged from the eligible hospital or CAH inpatient or emergency department (POS 21 or 23) during the EHR reporting period, a secure message was sent using the electronic messaging function of CEHRT to the patient (or their authorized representatives), or in response to a secure message sent by the patient (or their authorized representatives).

(*3*) Patient generated health data or data from a non-clinical setting is incorporated into the CEHRT for more than 5 percent of unique patients discharged from the eligible hospital or CAH inpatient or emergency department (POS 21 or 23) during the EHR reporting period.

(C) *Exclusions under paragraph (b)(3) of this section.* Any eligible hospital or CAH operating in a location that does not have 50 percent or more of its housing units with 4Mbps broadband availability according to the latest information available from the FCC on the first day of the EHR reporting period may exclude from the measures specified in paragraphs (d)(6)(ii)(B)(*1*) through (*3*) of this section.

(7) *Health information exchange*—(i) *EP health information exchange*—(A) *Objective.* The EP provides a summary of care record when transitioning or referring their patient to another setting of care, receives or retrieves a summary of care record upon the receipt of a transition or referral or upon the first patient encounter with a new patient, and incorporates summary of care information from other providers into their EHR using the functions of CEHRT.

(B) *Measures.* In accordance with paragraph (a)(2) of this section, an EP must attest to all 3 measures, but must meet the threshold for 2 of the 3 measures in paragraphs (d)(7)(i)(B)(*1*) through (*3*) of this section, in order to meet the objective. Subject to paragraph (c) of this section—

(*1*) *Measure 1.* For more than 50 percent of transitions of care and referrals, the EP that transitions or refers their patient to another setting of care or provider of care—

(*i*) Creates a summary of care record using CEHRT; and

(*ii*) Electronically exchanges the summary of care record.

(*2*) *Measure 2.* For more than 40 percent of transitions or referrals received and patient encounters in which the provider has never before encountered the patient, the EP incorporates into the patient's EHR an electronic summary of care document.

(*3*) *Measure 3.* For more than 80 percent of transitions or referrals received and patient encounters in which the provider has never before encountered the patient, the EP performs clinical information reconciliation. The EP must implement clinical information reconciliation for the following three clinical information sets:

(*i*) *Medication.* Review of the patient's medication, including the name, dosage, frequency, and route of each medication.

(*ii*) *Medication allergy.* Review of the patient's known allergic medications.

(*iii*) *Current problem list.* Review of the patient's current and active diagnoses.

(C) *Exclusions in accordance with paragraph (a)(3) of this section.* An EP must be excluded when any of the following occur:

(*1*) Any EP who transfers a patient to another setting or refers a patient to another provider less than 100 times during the EHR reporting period must be excluded from paragraph (d)(7)(i)(B)(*1*) of this section.

(*2*) Any EP for whom the total of transitions or referrals received and patient encounters in which the provider has never before encountered the patient, is fewer than 100 during the EHR reporting period may be excluded from paragraphs (d)(7)(i)(B)(*2*) and (*3*) of this section.

(*3*) Any EP that conducts 50 percent or more of his or her patient encounters in a county that does not have 50 percent or more of its housing units with 4Mbps broadband availability according to the latest information available from the FCC on the first day of the EHR reporting period may exclude from the measures specified in paragraphs (d)(7)(i)(B)(*1*) and (*2*) of this section.

(ii) *Eligible hospitals and CAHs health information exchange*—(A) *Objective.* The eligible hospital or CAH provides a summary of care record when transitioning or referring their patient to another setting of care, receives or retrieves a summary of care record upon the receipt of a transition or referral or upon the first patient encounter with a new patient, and incorporates summary of care information from other providers into their EHR using the functions of CEHRT.

(B) *Measures.* In accordance with paragraph (b)(2) of this section, an eligible hospital or CAH must attest to all three measures, but must meet the threshold for 2 of the 3 measures in paragraphs (d)(7)(ii)(B)(*1*) through (*3*) of this section. Subject to paragraph (b)(5) of this section—

(*1*) *Measure 1.* For more than 50 percent of transitions of care and referrals, the eligible hospital or CAH that transitions or refers its patient to another setting of care or provider of care—

(*i*) Creates a summary of care record using CEHRT; and

(*ii*) Electronically exchanges the summary of care record.

(*2*) *Measure 2.* For more than 40 percent of transitions or referrals received and patient encounters in which the provider has never before encountered the patient, the eligible hospital or CAH incorporates into the patient's EHR an electronic summary of care document from a source other than the provider's EHR system.

(*3*) *Measure 3.* For more than 80 percent of transitions or referrals received and patient encounters in which the provider has never before encountered the patient, the eligible hospital or CAH performs a clinical information reconciliation. The provider must implement clinical information reconciliation for the following three clinical information sets:

(*i*) *Medication.* Review of the patient's medication, including the name, dosage, frequency, and route of each medication.

(*ii*) *Medication allergy.* Review of the patient's known allergic medications.

(*iii*) *Current problem list.* Review of the patient's current and active diagnoses.

(C) *Exclusions in accordance with paragraph (b)(3) of this section.* (*1*) Any eligible hospital or CAH for whom the total of transitions or referrals received and patient encounters in which the provider has never before encountered the patient, is fewer than 100 during the EHR reporting period may be excluded from paragraphs (d)(7)(i)(B)(*2*) and (*3*) of this section.

(*2*) Any eligible hospital or CAH operating in a location that does not have 50 percent or more of its housing units with 4Mbps broadband availability according to the latest information available from the FCC on the first day of the EHR reporting period may exclude from the measures specified in paragraphs (d)(7)(ii)(B)(*1*) and (*2*) of this section.

(8) *Public Health and Clinical Data Registry Reporting*—(i) *EP Public Health and Clinical Data Registry: Reporting objective*—(A) *Objective.* The EP is in active engagement with a public health agency or clinical data registry to submit electronic public health data in a meaningful way using CEHRT, except where prohibited, and in accordance with applicable law and practice.

(B) *Measures.* In order to meet the objective under paragraph (d)(8)(i)(A) of this section, an EP must choose from measures 1 through 5 (paragraphs (d)(8)(i)(B)(*1*) through (*5*) of this section) and must successfully attest to any combination of two measures. These measures may be met by any combination, including meeting measure specified in paragraph (d)(8)(i)(B)(*4*) or (*5*) of this section multiple times, in accordance with applicable law and practice:

(*1*) *Immunization registry reporting.* The EP is in active engagement with a public health agency to submit immunization data and receive immunization forecasts and histories from the public health immunization registry/immunization information system (IIS).

(*2*) *Syndromic surveillance reporting.* The EP is in active engagement with a public health agency to submit syndromic surveillance data from an urgent care setting.

(*3*) *Electronic case reporting.* The EP is in active engagement with a public health agency to submit case reporting of reportable conditions.

(*4*) *Public health registry reporting.* The EP is in active engagement with a public health agency to submit data to public health registries.

(*5*) *Clinical data registry reporting.* The EP is in active engagement to submit data to a clinical data registry.

(C) *Exclusions in accordance with paragraph (a)(3) of this section.* (*1*) Any EP meeting one or more of the following criteria may be excluded from the immunization registry reporting measure in paragraph (d)(8)(i)(B)(*1*) of this section if the EP—

(*i*) Does not administer any immunizations to any of the populations for which data is collected by their jurisdiction's immunization registry or immunization information system during the EHR reporting period.

(*ii*) Operates in a jurisdiction for which no immunization registry or immunization information system is capable of accepting the specific standards required to meet the CEHRT definition at the start of its EHR reporting period.

(*iii*) Operates in a jurisdiction where no immunization registry or immunization information system has declared readiness to receive immunization data as of 6 months prior to the start of the EHR reporting period.

(*2*) Any EP meeting one or more of the following criteria may be excluded from the syndromic surveillance reporting measure described in paragraph (d)(8)(i)(B)(*2*) of the section if the EP—

(*i*) Is not in a category of providers from which ambulatory syndromic surveillance data is collected by their jurisdiction's syndromic surveillance system.

(*ii*) Operates in a jurisdiction for which no public health agency is capable of receiving electronic syndromic surveillance data in the specific standards required to meet the CEHRT definition at the start of the EHR reporting period.

(*iii*) Operates in a jurisdiction where no public health agency has declared readiness to receive syndromic surveillance data from EPs as of 6 months prior to the start of the EHR reporting period.

(*3*) Any EP meeting one or more of the following criteria may be excluded from

the case reporting measure at paragraph (d)(8)(i)(B)(*3*) of this section if the EP:

(*i*) Does not treat or diagnose any reportable diseases for which data is collected by their jurisdiction's reportable disease system during the EHR reporting period.

(*ii*) Operates in a jurisdiction for which no public health agency is capable of receiving electronic case reporting data in the specific standards required to meet the CEHRT definition at the start of the EHR reporting period.

(*iii*) Operates in a jurisdiction where no public health agency has declared readiness to receive electronic case reporting data as of 6 months prior to the start of the EHR reporting period.

(*4*) Any EP meeting at least one of the following criteria may be excluded from the public health registry reporting measure specified in paragraph (d)(8)(i)(B)(*4*) of this section if the EP—

(*i*) Does not diagnose or directly treat any disease or condition associated with a public health registry in the EP's jurisdiction during the EHR reporting period.

(*ii*) Operates in a jurisdiction for which no public health agency is capable of accepting electronic registry transactions in the specific standards required to meet the CEHRT definition at the start of the EHR reporting period.

(*iii*) Operates in a jurisdiction where no public health registry for which the EP, eligible hospital, or CAH is eligible has declared readiness to receive electronic registry transactions as of 6 months prior to the start of the EHR reporting period.

(*5*) Any EP meeting at least one of the following criteria may be excluded from the clinical data registry reporting measure specified in paragraph (d)(8)(i)(B)(*5*) of this section if the EP—

(*i*) Does not diagnose or directly treat any disease or condition associated with a clinical data registry in their jurisdiction during the EHR reporting period.

(*ii*) Operates in a jurisdiction for which no clinical data registry is capable of accepting electronic registry transactions in the specific standards required to meet the CEHRT definition at the start of the EHR reporting period.

(*iii*) Operates in a jurisdiction where no clinical data registry for which the EP, eligible hospital, or CAH is eligible has declared readiness to receive electronic registry transactions as of 6 months prior to the start of the EHR reporting period.

(ii) *Eligible hospital and CAH Public Health and Clinical Data Registry: Reporting objective*—(A) *Objective.* The eligible hospital or CAH is in active engagement with a public health agency (PHA) or clinical data registry (CDR) to submit electronic public health data in a meaningful way using CEHRT, except where prohibited, and in accordance with applicable law and practice.

(B) *Measures.* In order to meet the objective under paragraph (d)(8)(ii)(A) of this section, an eligible hospital or CAH must choose from measures 1 through 6 (as described in paragraphs (d)(8)(ii)(B)(*1*) through (*6*) of this section) and must successfully attest to any combination of four measures. These measures may be met by any combination, including meeting the measure specified in paragraph (d)(8)(ii)(B)(*4*) or (*5*) of this section multiple times, in accordance with applicable law and practice:

(*1*) *Immunization registry reporting.* The eligible hospital or CAH is in active engagement with a public health agency to submit immunization data and receive immunization forecasts and histories from the public health immunization registry/immunization information system (IIS).

(*2*) *Syndromic surveillance reporting.* The eligible hospital or CAH is in active engagement with a public health agency to submit syndromic surveillance data from an urgent care setting.

(*3*) *Case reporting.* The eligible hospital or CAH is in active engagement with a public health agency to submit case reporting of reportable conditions.

(*4*) *Public health registry reporting.* The eligible hospital or CAH is in active engagement with a public health agency to submit data to public health registries.

(*5*) *Clinical data registry reporting.* The eligible hospital or CAH is in active engagement to submit data to a clinical data registry.

(*6*) *Electronic reportable laboratory result reporting.* The eligible hospital or CAH is in active engagement with a public health agency to submit electronic reportable laboratory results.

(C) *Exclusions in accordance with paragraph (b)(3) of this section.* (*1*) Any eligible hospital or CAH meeting one or more of the following criteria may be excluded from to the immunization registry reporting measure specified in paragraph (d)(8)(ii)(B)(*1*) of this section if the eligible hospital or CAH—

(*i*) Does not administer any immunizations to any of the populations for which data is collected by its jurisdiction's immunization registry or immunization information system during the EHR reporting period.

(*ii*) Operates in a jurisdiction for which no immunization registry or immunization information system is capable of accepting the specific standards required to meet the CEHRT definition at the start of the EHR reporting period.

(*iii*) Operates in a jurisdiction where no immunization registry or immunization information system has declared readiness to receive immunization data as of 6 months prior to the start of the EHR reporting period.

(*2*) Any eligible hospital or CAH meeting one or more of the following criteria may be excluded from the syndromic surveillance reporting measure specified in paragraph (d)(8)(ii)(B)(*2*) of this section if the eligible hospital or CAH—

(*i*) Does not have an emergency or urgent care department.

(*ii*) Operates in a jurisdiction for which no public health agency is capable of receiving electronic syndromic surveillance data in the specific standards required to meet the CEHRT definition at the start of the EHR reporting period.

(*iii*) Operates in a jurisdiction where no public health agency has declared readiness to receive syndromic surveillance data from eligible hospitals or CAHs as of 6 months prior to the start of the EHR reporting period.

(*3*) Any eligible hospital or CAH meeting one or more of the following criteria may be excluded from the case reporting measure specified in paragraph (d)(8)(ii)(B)(*3*) of this section if the eligible hospital or CAH—

(*i*) Does not treat or diagnose any reportable diseases for which data is collected by their jurisdiction's reportable disease system during the EHR reporting period.

(*ii*) Operates in a jurisdiction for which no public health agency is capable of receiving electronic case reporting data in the specific standards required to meet the CEHRT definition at the start of their EHR reporting period.

(*iii*) Operates in a jurisdiction where no public health agency has declared readiness to receive electronic case reporting data as of 6 months prior to the start of the EHR reporting period.

(*4*) Any eligible hospital or CAH meeting at least one of the following criteria may be excluded from the public health registry reporting measure specified in paragraph (d)(8)(ii)(B)(*4*) of this section if the eligible hospital or CAH—

(*i*) Does not diagnose or directly treat any disease or condition associated with a public health registry in its jurisdiction during the EHR reporting period.

(*ii*) Operates in a jurisdiction for which no public health agency is capable of accepting electronic registry transactions in the specific standards

required to meet the CEHRT definition at the start of the EHR reporting period.

(*iii*) Operates in a jurisdiction where no public health registry for which the eligible hospital or CAH is eligible has declared readiness to receive electronic registry transactions as of 6 months prior to the start of the EHR reporting period.

(*5*) Any eligible hospital or CAH meeting at least one of the following criteria may be excluded from the clinical data registry reporting measure specified in paragraph (d)(8)(ii)(B)(*5*) of this section if the eligible hospital or CAH—

(*i*) Does not diagnose or directly treat any disease or condition associated with a clinical data registry in their jurisdiction during the EHR reporting period.

(*ii*) Operates in a jurisdiction for which no clinical data registry is capable of accepting electronic registry transactions in the specific standards required to meet the CEHRT definition at the start of the EHR reporting period.

(*iii*) Operates in a jurisdiction where no clinical data registry for which the eligible hospital or CAH is eligible has declared readiness to receive electronic registry transactions as of 6 months prior to the start of the EHR reporting period.

(*6*) Any eligible hospital or CAH meeting one or more of the following criteria may be excluded from the electronic reportable laboratory result reporting measure specified in paragraph (d)(8)(ii)(B)(*6*) of this section if the eligible hospital or CAH—

(*i*) Does not perform or order laboratory tests that are reportable in its jurisdiction during the EHR reporting period.

(*ii*) Operates in a jurisdiction for which no public health agency that is capable of accepting the specific ELR standards required to meet the CEHRT definition at the start of the EHR reporting period.

(*iii*) Operates in a jurisdiction where no public health agency has declared readiness to receive electronic reportable laboratory results from an eligible hospital or CAH as of 6 months prior to the start of the EHR reporting period.

■ 27. Section 495.40 is amended by—

■ a. Revising paragraph (a) introductory text.

■ b. Revising paragraphs (a)(2)(i)(E) and (F).

■ c. Adding paragraph (a)(2)(i)(G).

■ d. Revising paragraphs (b) introductory text and (b)(2)(i)(E) and (F).

■ e. Redesignating paragraph (b)(2)(i)(G) as paragraph (b)(2)(i)(H).

■ f. Adding a new paragraph (b)(2)(i)(G).

The revisions and additions read as follows:

§ 495.40 Demonstration of meaningful use criteria.

(a) *Demonstration by EPs.* An EP must demonstrate that he or she satisfies each of the applicable objectives and associated measures under § 495.20 or § 495.24, as follows:

* * * * *

(2) * * *

(i) * * *

(E) For CYs 2015 through 2016, satisfied the required objectives and associated measures under § 495.22(e) for meaningful use.

(F) For CY 2017: An EP that has successfully demonstrated it is a meaningful EHR user in any prior year may satisfy either the objectives and measures specified in § 495.22(e) for meaningful use or the objectives and measures specified in § 495.24(d) for meaningful use; an EP that has never successfully demonstrated it is a meaningful EHR user in any prior year must satisfy the objectives and measures specified in § 495.22(e) for meaningful use.

(G) For CY 2018 and subsequent years, satisfied the required objectives and associated measures under § 495.24(d) for meaningful use.

* * * * *

(b) *Demonstration by eligible hospitals and CAHs.* To successfully demonstrate that it is a meaningful EHR user, an eligible hospital or CAH must satisfy the following requirements:

* * * * *

(2) * * *

(i) * * *

(E) For CYs 2015 through 2016, satisfied the required objectives and associated measures under § 495.22(e) for meaningful use.

(F) For CY 2017:

(*1*) For an eligible hospital or CAH attesting to CMS: An eligible hospital or CAH that has successfully demonstrated it is a meaningful EHR user in any prior year may satisfy either the objectives and measures specified in § 495.22(f) for meaningful use or the objectives and measures specified in § 495.24(c) for meaningful use; an eligible hospital or CAH that has never successfully demonstrated it is a meaningful EHR user in any prior year must satisfy the objectives and measures specified in § 495.22(f) for meaningful use.

(*2*) For an eligible hospital or CAH attesting to a State for the Medicaid EHR Incentive Program: An eligible hospital or CAH that has successfully demonstrated it is a meaningful EHR user in any prior year may satisfy either the objectives and measures specified in § 495.22(e) for meaningful use or the objectives and measures specified in § 495.24(d) for meaningful use; an eligible hospital or CAH that has never successfully demonstrated it is a meaningful EHR user in any prior year must satisfy the objectives and measures specified in § 495.22(e) for meaningful use.

(G) For CY 2018:

(*1*) For an eligible hospital or CAH attesting to CMS, satisfied the required objectives and associated measures under § 495.24(c) for meaningful use.

(*2*) For an eligible hospital or CAH attesting to a State for the Medicaid EHR Incentive Program, satisfied the required objectives and associated measures under § 495.24(d) for meaningful use.

* * * * *

■ 28. Section 495.102 is amended by adding paragraph (d)(4)(v) to read as follows:

§ 495.102 Incentive payments to EPs.

* * * * *

(d) * * *

(4) * * *

(v) For the 2018 payment adjustment only, an EP who has not successfully demonstrated meaningful use in a prior year, intends to attest to meaningful use for an EHR reporting period in 2017 by October 1, 2017 to avoid the 2018 payment adjustment, and intends to transition to the Merit-Based Incentive Payment System (MIPS) and report on measures specified for the advancing care information performance category under the MIPS in 2017. The EP must explain in the application why demonstrating meaningful use for an EHR reporting period in 2017 would result in a significant hardship. Applications requesting this exception must be submitted no later than October 1, 2017, or a later date specified by CMS.

* * * * *

Dated: October 25, 2016.

Andrew M. Slavitt,

Acting Administrator, Centers for Medicare and Medicaid Services.

Dated: October 26, 2016.

Sylvia M. Burwell,

Secretary, Department of Health and Human Services.

[FR Doc. 2016–26515 Filed 11–1–16; 4:15 pm]

BILLING CODE 4120–01–P

FEDERAL REGISTER

Vol. 81 Monday,

No. 219 November 14, 2016

Part III

Federal Communications Commission

47 CFR Parts 1, 2, 15, et al.

Use of Spectrum Bands Above 24 GHz for Mobile Radio Services; Final Rule

FEDERAL COMMUNICATIONS COMMISSION

47 CFR Parts 1, 2, 15, 25, 30, and 101

[GN Docket No. 14–177, IB Docket Nos. 15–256 and 97–95, RM–11664, WT Docket No. 10–112; FCC 16–89]

Use of Spectrum Bands Above 24 GHz for Mobile Radio Services

AGENCY: Federal Communications Commission.

ACTION: Final rule.

SUMMARY: In this document, the Federal Communications Commission (Commission or FCC) adopts rules for specific millimeter wave (mmW) bands above 24 GHz. This action is undertaken to establish a regulatory framework for the use of these bands for the development of the next generational evolution of wireless technology. Once effective, these rules will promote the development of highly beneficial technologies, in particular the so-called 5G technology.

DATES: Effective December 14, 2016, except for §§ 25.136 and 30.8 which contain information collection requirements that are not effective until approved by the Office of Management and Budget. The FCC will publish a document in the **Federal Register** announcing the effective date for those sections.

FOR FURTHER INFORMATION CONTACT: John Schauble of the Wireless Telecommunications Bureau, Broadband Division, at 202–418–0797 or *John.Schauble@fcc.gov,* Michael Ha of the Office of Engineering and Technology, Policy and Rules Division, at 202–418–2099 or *Michael.Ha@fcc.gov,* or Jose Albuquerque of the International Bureau, Satellite Division, at 202–418–2288 or *Jose.Albuquerque@fcc.gov.* For information regarding the PRA information collection requirements contained in this PRA, contact Cathy Williams, Office of Managing Director, at (202) 418–2918, or via email at *Cathy.Williams@fcc.gov.*

SUPPLEMENTARY INFORMATION: This is a summary of the Commission's *Report and Order* GN Docket No. 14–177, FCC 16–89, adopted and released on July 14, 2016. The complete text of this document is available for public inspection and copying from 8 a.m. to 4:30 p.m. Eastern Time (ET) Monday through Thursday or from 8 a.m. to 11:30 a.m. ET on Fridays in the FCC Reference Information Center, 445 12th Street SW., Room CY–A257, Washington, DC 20554. The complete text is available on the Commission's Web site at *http://wireless.fcc.gov,* or by using the search function on the ECFS Web page at *http://www.fcc.gov/cgb/ecfs/.* Alternative formats are available to persons with disabilities by sending an email to *fcc504@fcc.gov* or by calling the Consumer & Governmental Affairs Bureau at 202–418–0530 (voice), 202–418–0432 (tty).

Ex Parte Presentations

This proceeding shall continue to be treated as a ''permit-but-disclose'' proceeding in accordance with the Commission's *ex parte* rules. Persons making *ex parte* presentations must file a copy of any written presentation or a memorandum summarizing any oral presentation within two business days after the presentation (unless a different deadline applicable to the Sunshine period applies). Persons making oral *ex parte* presentations are reminded that memoranda summarizing the presentation must (1) list all persons attending or otherwise participating in the meeting at which the *ex parte* presentation was made, and (2) summarize all data presented and arguments made during the presentation. If the presentation consisted in whole or in part of the presentation of data or arguments already reflected in the presenter's written comments, memoranda or other filings in the proceeding, the presenter may provide citations to such data or arguments in his or her prior comments, memoranda, or other filings (specifying the relevant page and/or paragraph numbers where such data or arguments can be found) in lieu of summarizing them in the memorandum. Documents shown or given to Commission staff during *ex parte* meetings are deemed to be written *ex parte* presentations and must be filed consistent with § 1.1206(b). In proceedings governed by § 1.49(f) or for which the Commission has made available a method of electronic filing, written *ex parte* presentations and memoranda summarizing oral *ex parte* presentations, and all attachments thereto, must be filed through the electronic comment filing system available for that proceeding, and must be filed in their native format (*e.g.,* .doc, .xml, .ppt, searchable .pdf). Participants in this proceeding should familiarize themselves with the Commission's *ex parte* rules.

Paperwork Reduction Act

The *Report and Order* contains new information collection requirements subject to the Paperwork Reduction Act of 1995 (PRA), Public Law 104–13. It will be submitted to the Office of Management and Budget (OMB) for review under § 3507(d) of the PRA. OMB, the general public, and other Federal agencies will be invited to comment on the new information collection requirements contained in this proceeding.

Comment Filing Procedures

Pursuant to §§ 1.415 and 1.419 of the Commission's rules, 47 CFR 1.415, 1.419, interested parties may file comments and reply comments on or before the dates indicated on the first page of this document. Comments may be filed using the Commission's Electronic Comment Filing System (ECFS). See Electronic Filing of Documents in Rulemaking Proceedings, 63 FR 24121 (1998).

- *Electronic Filers:* Comments may be filed electronically using the Internet by accessing the ECFS: *http://fjallfoss.fcc.gov/ecfs2/* or the Federal eRulemaking Portal: *http://www.regulations.gov.* Filers should follow the instructions provided on the Web site for submitting comments and transmit one electronic copy of the filing to GN Docket No. 14–177. For ECFS filers, in completing the transmittal screen, filers should include their full name, U.S. Postal Service mailing address, and the applicable docket number.
- *Paper Filers:* Parties who choose to file by paper must file an original and one copy of each filing. If more than one docket or rulemaking number appears in the caption of this proceeding, filers must submit two additional copies for each additional docket or rulemaking number.
- Filings can be sent by hand or messenger delivery, by commercial overnight courier, or by first-class or overnight U.S. Postal Service mail. All filings must be addressed to the Commission's Secretary, Office of the Secretary, Federal Communications Commission.
- All hand-delivered or messenger-delivered paper filings for the Commission's Secretary must be delivered to FCC Headquarters at 445 12th St. SW., Room TW–A325, Washington, DC 20554. The filing hours are 8:00 a.m. to 7:00 p.m. All hand deliveries must be held together with rubber bands or fasteners. Any envelopes and boxes must be disposed of before entering the building.
- Commercial overnight mail (other than U.S. Postal Service Express Mail and Priority Mail) must be sent to 9300 East Hampton Drive, Capitol Heights, MD 20743.
- U.S. Postal Service first-class, Express, and Priority mail must be

addressed to 445 12th Street, SW., Washington DC 20554.

People with Disabilities: To request materials in accessible formats for people with disabilities (braille, large print, electronic files, audio format), send an email to *fcc504@fcc.gov* or call the Consumer & Governmental Affairs Bureau at 202–418–0530 (voice), 202–418–0432 (tty).

Congressional Review Act

The Commission will send a copy of this *Report and Order* in a report to be sent to Congress and the Government Accountability Office pursuant to the Congressional Review Act (CRA), see 5 U.S.C. 801(a)(1)(A).

Synopsis

I. Introduction

1. In this *Report and Order,* the Commission adopts new licensing, service, and technical rules for three bands. In so doing, the Commission attempts to follow a consistent framework across all of the bands that can serve as a template for additional bands in the future. The Commission adopted 10 year license terms and performance requirements that are flexible to allow multiple use cases to evolve over time. These basic building blocks are modified in order to meet the specific characteristics of a particular band.

2. The Commission also took significant steps forward on solutions to spectrum sharing in the millimeter wave (mmW) bands. The Commission adopted rules that will allow both satellite and terrestrial networks to continue to expand in a flexible manner. The Commission continues to facilitate co-primary shared access to the 39.5–40 GHz band for Federal and non-Federal users, and building off of recent policy developments in spectrum sharing, it also created a new approach to Federal sharing in the 37 GHz band. Specifically, instead of relying on static exclusion zones, the Commission created a space for both Federal and non-Federal users to share on a coequal basis and set out a process for defining how that sharing will be implemented. Finally, the Commission substantially increases the amount of unlicensed spectrum available by adding another seven gigahertz to the existing 57–64 GHz band, and adopting flexible technical rules.

A. 28 GHz Band

1. Suitability for Mobile Use

3. Some satellite operators, satellite equipment suppliers and satellite-focused trade associations urge the Commission not to authorize terrestrial mobile services in the 28 GHz band. This perspective is by no means unanimous or unqualified even among that group, however. SES, for example, says that it expects to support terrestrial mobile services in bands above 24 GHz by providing video distribution, providing backhaul services, and by extending terrestrial network coverage to sea, air, and remote land masses. EchoStar says that satellite operators could coexist with mobile services in the band by avoiding deployment of gateway earth stations in large urban centers. ViaSat estimates that the compatibility distance between satellite earth stations and terrestrial mobile in the 28 GHz band would be in the range of 160 meters, and could be further reduced by additional mitigation techniques. Nearly all other commenters who address the topic emphatically support mobile service authorization in the 28 GHz band.

4. Perhaps more so than other mmW bands, the 28 GHz band has been the focus of academic research and industry prototyping efforts to develop mobile service technologies. The 28 GHz band is attractive for research on enabling mobility in mmW bands because, with 850 megahertz of contiguous bandwidth, it has ample capacity to accommodate a wide range of high data-rate applications, and it has global co-primary allocations for fixed and mobile services. There are no Federal allocations in the band. Further, because this is an active service with Local Multipoint Distribution Service (LMDS) licenses covering about 75 percent of the U.S. population, it can be quickly repurposed for new flexible uses, including mobile. The ready availability of the spectrum will also help drive the development of a robust ecosystem at a large scale.

5. Opponents of authorizing new flexible and mobile use in the 28 GHz band raise three basic objections: (1) That there is no international consensus to authorize mobile services in the band; (2) that LMDS operators do not have an equitable expectation of mobile rights in the band; and (3) that mobile services in the 28 GHz band would impair vital satellite services. The Commission discusses the first of those issues below, reserving discussion of the second and third issues for Section I.4.c (Aggregate Interference to Satellite Receivers).

6. Regarding the alleged absence of international consensus expressed by some of the commenting parties, the Commission notes that the 28 GHz band already has a primary worldwide mobile service allocation, which embodies a previously agreed consensus among International Telecommunication Union (ITU) members. Although World Radiocommunication Conference (WRC) 2015 (WRC–15) omitted 27.5–28.35 GHz from a list of mmW bands that it invited ITU-Radiocommunication (ITU–R) to study for mobile service, the record in this proceeding makes it abundantly clear that there are significant benefits to authorizing mobile use in the 28 GHz band regardless of that international decision.

7. Administrations and wireless industry representatives that have been major leaders in the mobile industry support authorization of mobile services in the 27.5–28.35 GHz band. Verizon notes that countries supporting mobile use in the band include South Korea, Japan, Sweden, Finland, and Singapore—''technology powerhouses with their sights set on 5G''—and argues that this Commission should not delay repurposing the 28 GHz band while its counterparts in those countries support their industries' efforts to develop mobile technologies for the band. Intel says that major markets like the U.S., Japan, and Korea are moving expeditiously, ''blazing the trail for mobile 5G services in the 28 GHz band, in spite of the WRC–15 decision not to study the 28 GHz band leading up to WRC–19.'' Ericsson contends that, regardless of the outcome of WRC–15, spectrum from this general range very likely will be used for 5G around the world, as evidenced by the fact that Japan and Korea appear to be pressing ahead to use frequencies in this range for their Olympic Game deployments. Nokia expresses disappointment with the outcome of WRC–15, sees ''great potential'' for the 28 GHz band and urges the Commission to ''unlock the promise of that band for mobile use.'' Internationally, Huawei and Alcatel-Lucent are also focusing on the 28 GHz band as key spectrum for mobile use. T-Mobile USA, whose majority owner is the flagship German telecommunications company, Deutsche Telekom, filed comments in this proceeding expressing its support for mobile services in the 28 GHz band. Other comments reflect near-unanimous support among carriers, equipment suppliers, and associations that represent them.

8. The Commission acknowledges the comments of parties that emphasize the importance of international harmonization, but in this case, it appears there is sufficient international interest (including from Japan and South Korea) for using the 28 GHz band and adjacent bands to justify making the 28 GHz band available for mobile use. Intel and Ericsson both state that the

mobile industry could readily create integrated circuits with tuning ranges for various bands in that part of the spectrum, and the Republic of Korea submitted a proposal to WRC–15 stating that the ''frequency range from 24.25 GHz to 29.5 GHz proposed from regional groups could be implemented by one single device to facilitate global roaming around the year 2020.'' These kinds of capabilities are already being reflected in standards development. Microsoft explains that 3GPP release 13 will allow for carrier aggregation of multiple bands of spectrum, both licensed and unlicensed, in the 5 GHz band, and it says that, once 5G service is defined, the committee will likely extend its standards to encompass the millimeter wave bands. Microsoft argues that carriers should ultimately be able to aggregate low-, medium-, and high-band spectrum. The significant domestic and international interest in making the 28 GHz band available for new mobile uses clearly supports taking action in this *Report and Order* to create new flexible use licenses.

2. Licensing the 28 GHz Band

a. Use of Geographic Area Licensing

9. The Commission adopted its proposal to implement geographic area licensing throughout the 28 GHz band because geographic area licensing will expedite deployment, provide licensees with the flexibility to provide a variety of services, and is consistent with the existing licensing scheme. One significant advantage to this approach is that the Commission can expedite use of the band for advanced services because it is consistent with the existing framework in this band.

10. In contrast, if the Commission adopted a separate framework for mobile use of the band, the Commission needs to develop a Spectrum Access System (SAS), define the specific rights held by the existing licensees, and work out rules for coordination with the existing licensees. Adopting geographic area licensing for this band is also consistent with the Commission's goal of adopting a balanced licensing approach that includes licensed, unlicensed, and innovative sharing approaches across a variety of bands. For these reasons, the Commission is not adopting a 3.5 GHz-style SAS framework for this band.

11. Similarly, the Commission declines to adopt Microsoft's proposal to create an unlicensed portion of the band. The Commission believes splitting the band into unlicensed and licensed segments would potentially hinder deployment by making it more difficult for licensees to use the full 850 megahertz of spectrum. The Commission nonetheless agrees that a balance between licensed and unlicensed usage is important, and as described below, the Commission is also making seven gigahertz of spectrum available for use by unlicensed devices in the 64–71 GHz band, and create an opportunity for shared access in the 37–37.6 GHz band segment.

b. License Area Size

12. The Commission adopted counties as the license area size for Upper Microwave Flexible Use Service (UMFUS) licenses in the 28 GHz band. The Commission also adopted its proposal to subdivide existing LMDS licenses on a county basis. As the Commission explained in the *Notice of Proposed Rulemaking (NPRM),* a county-based license affords a licensee the flexibility to develop localized services, allows for targeted deployments based on market forces and customer demand, and facilitates access by both smaller and larger carriers. In the Commission views, the claims of certain commenters that larger license areas will better fit the services contemplated for these bands lack specificity and do not take into account the potential need for targeted deployment. It is unclear that providers need to—or will want to—aggregate nationwide licenses, as mobile operations in the band may initially be deployed. On a mobile basis, this band is envisioned for mobile operations in denser population centers or around highway corridors. While it is true that county-sized licenses will result in more borders, the Commission adopted a power flux density (PFD) limit at the border that will facilitate coordination between licensees. Furthermore, no party offered evidence that there have been problems providing service near existing Basic Trading Area (BTA) borders. The Commission notes that licensees in other services regularly coordinate their operations along shared borders and have well established procedures for conducting this coordination. The Commission expects that licensees will be able to apply these same procedures in this band without any undue burden. To the extent existing BTA licensees do not believe it is economically viable to build within certain counties of a BTA, the Commission believes it would be appropriate to give other interested parties an opportunity to license and to make use of the spectrum. Finally, establishing smaller license areas is fair to existing licensees because those licensees are also obtaining valuable new rights and they are keeping the same bundle of rights they had previously. Overall, the Commission believes the benefits of smaller license areas for this specific band outweigh any administrative burden on licensees and the Commission.

13. In this proceeding, the Commission is endeavoring to create a regulatory scheme that will suit the development of innovative wireless services for years to come. The Commission in recent years has sought greater consistency in its approach to geographic license area sizes to help providers aggregate licenses in a more targeted and efficient manner, gravitating toward license areas that are derived from Economic Area (EA) units. BTAs have only been used as the license area for a few commercial wireless services. Counties, however, are the base unit that make up common commercial wireless license sizes, including EAs and the new Partial Economic Area (PEA) license areas. There is also a practical advantage to issuing county-based licenses. Specifically, the Commission would be required to negotiate a new licensing agreement with Rand McNally to use BTAs in UMFUS. In recent years, the Commission has avoided using license areas controlled by third parties in order to eliminate the time and expense involved in negotiating such agreements.

3. Mobile Rights for Incumbents

14. The Commission adopted its proposal to grant mobile operating rights to existing active LMDS licensees. This grant is in fulfillment of the Commission's original mobile allocation for 28 GHz and its stated expectation of allowing mobile use in the band in ''providing LMDS licensees with maximum flexibility in designing their systems.'' The Commission adopted the rules; therefore, licensees are able to provide mobile services consistent with part 30 licensing and technical rules. Granting mobile operating rights to existing licensees will expedite the deployment of service, minimize the difficulties involved in coordinating fixed and mobile deployments, and provide a uniform licensing scheme throughout the United States. The Commission remains concerned that awarding fixed and mobile rights separately would lead to disputes between fixed and mobile licensees that could make it more difficult for both licensees to provide service.

15. The Commission recognizes that awarding mobile rights to incumbent licensees could be viewed as a windfall to those licensees, although the

Commission contemplated granting mobile rights when it first created LMDS. Here, the benefits of expediting service and ease of coordinating fixed and mobile service outweigh any foreseeable disadvantages of granting mobile rights to incumbents. In this instance, the Commission finds that expedition is particularly important because of the need to make mmW spectrum available for innovative and novel issues.

4. Satellite Terrestrial Sharing

a. Sharing With FSS (Fixed Satellite Service) Earth Stations

16. The record demonstrates that FSS earth stations in the 28 GHz band can share the band with minimal impact on terrestrial operations. For example, EchoStar argues that 28 GHz Earth-to-space stations would not curtail the deployment of 5G systems outside a few very small non-urban areas. EchoStar and ViaSat both estimate that terrestrial mobile stations could be deployed as close as 170 meters to their Earth-to-space transmitters in the 28 GHz band. SES Americom suggests ''carving out some rural areas where future gateway earth stations can be licensed for use in the 28 GHz band.'' With respect to terrestrial operations, AT&T, Nokia, Samsung, T-Mobile, and Verizon estimate that the necessary separation distances between FSS earth stations and terrestrial deployments are between 50 and 400 meters depending on the type of earth stations. Therefore, the Commission finds that it is in the public interest to create rules that allow for continued and expanded sharing between terrestrial operations and FSS earth stations in the 28 GHz band.

17. The Commission recognizes that sharing may be more difficult for non-geostationary satellite systems, such as the system operated by O3b. While O3b argues that it needs multiple sites in a county in order to serve customer locations, it ignores the Commission's decision that it was allowing FSS to access the 28 GHz band solely for the purpose of providing limited Earth-to-space gateway-type services. O3b had no reasonable expectation that the Commission would grant earth stations designed to serve customer locations priority over fixed LMDS services and mobile services that the Commission contemplated would become part of LMDS. O3b estimates that the preclusive distance for its gateway earth stations with respect to mmW mobile stations is between 1.2 and 13.8 kilometers. Nonetheless, the Commission believes that sharing is feasible for O3b. First, as discussed below, the Commission is grandfathering O3b's existing earth stations in Texas and Hawaii. Second, O3b has the option of locating future earth stations in relatively remote areas. Third, O3b can obtain protection by purchasing an exclusive use terrestrial license at auction or by working with a licensee in the secondary market to partition a license area with sufficient size to allow it to deploy additional earth stations without impacting terrestrial operations, or enter into a different type of negotiated sharing arrangement. Fourth, O3b can take advantage of shielding or other mitigation techniques. Comsearch characterizes satellite operators' use of naturally occurring terrain features as follows:

> Before the great explosion of satellite communications for all types of uses, earth station sites were carefully selected with protection from interference the primary consideration. Most locations were many miles from the cities that they were serving, with the ideal earth station site being naturally shielded by terrain at a spot, which was calculated to be virtually free of interfering signals. For most types of communication, this type of isolation is not required, although it is still true that the most important aspect of a site is its shielding.

There are many naturally occurring terrain features that are capable of providing terrain shielding for NGSO gateway stations and shielding can also be provided by creating berms or other man-made barriers.

18. In short, while allowing new earth stations in the 28 GHz band is not without cost to terrestrial licensees, the Commission believes that the small area encumbered by a new earth station (with the limits noted below) will minimize such costs and will allow both satellite and terrestrial services to expand and coexist. Furthermore, satellite operators deployed in this band knowing that they were secondary licensees with respect to LMDS, that the Commission had chosen to allow only limited satellite use, and that the Commission had long envisioned allowing mobile use in the band. Despite these facts, below the Commission creates a path to further expand satellite gateways that could add thousands of new sites because the Commission believes the relatively small protection zones will have little impact on terrestrial use.

b. Licensing of FSS Earth Stations

19. The Commission maintains the current status of FSS, and as described below, creates new opportunities for continued expansion of FSS earth stations on a protected basis. Upgrading the FSS designation to co-primary status, even if limited to individually licensed earth stations, would be inconsistent with terrestrial use of this band and the Commission's decision to facilitate expanded terrestrial use, and would not effectively facilitate sharing in the band. The Commission believes the 28 GHz band will play a vital role in the deployment of advanced mmW services, and fully upgrading FSS under the Commission's service rules to co-primary status would be inconsistent with this goal and would be unnecessary to meet the FSS community's needs.

20. The Commission recognizes, however, that FSS operators rely on this band for gateway connectivity and have invested significant capital in the band and will continue to do so in the future. The Commission believes there is value in creating meaningful, targeted opportunities to deploy additional FSS earth stations in the band without harming terrestrial operations. The *NPRM's* proposals encouraging satellite operators to participate in county-sized (or smaller) market transactions were predicated in part on the vast protection zones that satellite operators have traditionally claimed were necessary, either to protect their operations or to protect others from them. Here, there is a consensus that much smaller protection zones are needed. EchoStar and ViaSat have both estimated that terrestrial mobile stations could be deployed as close as 170 meters to their Earth-to-space transmitters in the 28 GHz band. Most other satellite operators either support those specific calculations, agree in general terms that the necessary preclusive zones can be very small, or state that gateway earth stations can be located in rural areas far away from the urban cores where mmW mobile operations will be most viable.

21. The ability of satellite earth stations and terrestrial operations to coexist in close proximity to each other has two significant ramifications. First, it should be possible for satellite and terrestrial services to share the 28 GHz band with *de minimis* impairment of each other's operations. Second, the disparity between the county-sized license areas the Commission has established for 28 GHz UMFUS licensees and the extremely small areas required for FSS earth stations makes it inappropriate for the Commission to rely exclusively on a market-based mechanism for assigning rights to FSS earth stations, although the Commission retains this option as one means through which FSS operators may expand.

22. In addition to acquiring the terrestrial license rights, the

Commission also concludes that it would be efficient to continue to authorize gateway satellite earth stations under the existing part 25 first-come, first-served basis. The Commission adopts a mechanism under which FSS earth stations will, so long as they comply with conditions noted below, be able to deploy new gateways in limited circumstances without being required to take any additional actions to provide interference protection to UMFUS licensees. The Commission builds this upon record support for several different approaches to sharing in the 28 GHz band.

23. The authorization of FSS earth stations in the 27.5–28.35 GHz band that will not be required to take any additional actions to provide interference protection to UMFUS licenses is subject to the following conditions. First, the Commission will authorize no more than three locations in each county where FSS may deploy earth stations on a protected basis. Second, an FSS applicant must demonstrate in its license application that the permitted interference zone around its earth station, which the Commission will define as the contour within which FSS licensees generate a PFD, at 10 meters above ground level, of no more than -77.6 dBm/m^2/MHz, together with any preexisting earth stations located in the same county on a protected basis, will, in the aggregate, cover no more than 0.1 percent of the population of the county license area where the earth station is located.[1] Third, the applicant must show that the permitted interference zone does not infringe upon any major event venue, arterial street, interstate or U.S. highway, urban mass transit route, passenger railroad, or cruise ship port. The Commission notes that Verizon supports prohibiting siting earth stations near athletic and/or entertainment venues, interstate and U.S. highways, and port facilities. The Commission believes the other locations the Commission has identified are similarly areas where the Commission could expect to have high demand for wireless services. Fourth, prior to filing its application, if there is an existing 28 GHz UMFUS licensee in the county where it is proposing to locate its earth station, the earth station applicant must coordinate its operation with the existing UMFUS licensees using the coordination procedures contained in § 101.103(d) of the Commission's rules. The purpose of the coordination is to ensure that the earth station will not interfere with existing facilities operating under the UMFUS license. The Commission expects that UMFUS licensees will cooperate in good faith in the coordination process and only raise objections if there is a legitimate concern about interference to existing UMFUS facilities or failure to comply with the criteria listed above.

24. These conditions are designed to provide FSS licensees with substantial opportunities to expand their limited use of the 28 GHz band to deploy earth stations that do not have to protect terrestrial services, while minimizing the impact on terrestrial operations. Since there are over 3,000 counties in the United States, with a potential for up to three locations in each county, FSS licensees would have many choices for earth station locations. Furthermore, even with the conditions the Commission has imposed, FSS operators will have great flexibility in selecting earth station locations that meet their needs. Taking ViaSat's 160-meter radius estimate as a point of departure, the typical interference zone for terrestrial operations around a gateway earth station would cover about 0.08 square kilometers. As ViaSat notes, this zone could be reduced further by reducing the preclusive distance around the earth station, using mitigation techniques such as shielding. Even without such reductions, the interference zone would represent only about 0.0033 percent of the area of an average U.S. county. If one were to assume an even population distribution throughout every county, ViaSat's interference zone would cover no more than 0.1 percent of the population of any county that covers more than 80 square kilometers. There are only four counties in the United States that cover less than 80 square kilometers. In addition, any interference zone will be allowed to accommodate multiple FSS earth stations that could, for instance, be serving different satellites in the geostationary orbit, as long as these earth stations, in the aggregate, do not cause the interference zone to exceed the limits the Commission adopted in this *Report and Order.*

25. Conversely, the Commission believes that allowing FSS earth stations to share the 28 GHz band under these conditions will not unduly hinder terrestrial deployment in the band. The Commission notes that existing LMDS licensees are obtaining valuable mobile rights, and the value of those rights far outweighs any impairment imposed by this sharing mechanism. In addition, under the rules the Commission adopted, the Commission believes that FSS operations will encumber only a small geographic area and a small portion of the population of the license area. While the Commission maintains flexibility for FSS operators to choose the areas that fit within these conditions, current and future licensees will have some ability to predict the potential impact on the license area.

26. Other than applying those conditions, the Commission does not propose to designate the locations of any county's satellite permitted interference zones in advance—*i.e.,* the Commission will leave the choices of locations to the discretion of the satellite operators, conditional upon the licensees constructing and activating their earth stations within 12 months, pursuant to § 25.133 of the Commission's rules.

27. The Commission also notes that FSS operators will have other mechanisms available to deploy earth stations that do not have to protect terrestrial services. The Commission will adopt its proposal to grant such rights to any FSS earth stations for which the FSS operator also holds the UMFUS license that covers the earth station's permitted interference zone. To the extent FSS operators and UMFUS licensees enter into private agreements, their relationship will be governed by those agreements. Finally, FSS earth stations may continue to be authorized without the benefit of an interference zone. In this respect, taking into account the small size of the area around an earth station where terrestrial operations would not be protected, the Commission encourages UMFUS licensees to be flexible in providing certainty to the operation of FSS earth stations in areas where they do not intend to deploy terrestrial services. The Commission emphasizes that these FSS earth stations will have no expectation of interfering rights and will have to cease operation if requested by UMFUS licensees at any time on the basis of harmful interference to their services.

28. The Commission also modifies its proposal in the *NPRM* for treatment of existing FSS gateway earth stations. Since the Commission is no longer requiring FSS operators to obtain an UMFUS license in order to obtain the right to interfere, the Commission will not grant UMFUS licenses to existing FSS earth station holders. Instead, the Commission will grandfather all

[1] The International Bureau will issue a public notice seeking comment on the appropriate methodology to calculate the 0.1 percent population limit and further details regarding earth station interference zone calculation (including propagation models, *e.g.* free space versus probabilistic), and will also seek comment on best practices for earth station siting to minimize the impact on UMFU services, colocation of earth stations, and accommodating multiple earth station interference zones without exceeding 0.1 percent of population in a given county.

existing 28 GHz FSS earth stations authorized as of the adoption date (July 14, 2016) of this *Report and Order* and grant them the right to operate under the terms of their existing authorizations without taking into account possible interference to UMFUS operations. The Commission will also grandfather pending applications for 28 GHz earth stations filed prior to the adoption date of this *Report and Order* if such applications are subsequently granted pursuant to the existing part 25 rules (*i.e.,* without regard to the criteria the Commission adopted). The Commission notes that in many instances, these earth stations are used to provide valuable services to customers. In areas where there is no existing LMDS licensee, a new UMFUS licensee will have the ability to take the existing FSS earth station into account before it acquires the license or plans deployment. Even in areas where there is an existing LMDS licensee, Samsung's analysis demonstrates that existing earth stations will have a small impact on the terrestrial licensee. Finally, the Commission notes that AT&T and Verizon support grandfathering existing earth stations.

29. In adopting these rules, the Commission acknowledges with appreciation the efforts that AT&T and EchoStar have made to forge a compromise proposal that would be acceptable to other parties. The Commission declines to adopt their compromise proposal because it would have provided less predictability regarding the locations of future earth stations, and it would have limited the ability of FSS to deploy near population centers even if the deployment affected a small percentage (or even none) of the population. By contrast, the sharing mechanism that the Commission adopted will provide predictability to terrestrial licensees while giving FSS the opportunity to greatly expand their operations to over 9,500 locations. The Commission believes the rules that the Commission adopted will encourage intensive use of the band by both UMFUS and FSS licensees.

c. Aggregate Interference to Satellite Receivers

30. The second issue that must be considered with respect to satellite-terrestrial system coexistence is aggregate skyward interference to satellite receivers. There is a concern on the record that upward transmissions from large numbers of terrestrial stations will, in the aggregate, generate enough power to be received at the satellite's receiver, thus degrading the satellite's performance. The most detailed concerns about aggregate interference are raised in *ex parte* presentations by O3b, SES, ViaSat, and a group referring to themselves as Satellite Operators. For the reasons noted below, the Commission concludes that the potential for aggregate interference rising to the level of harmful interference is unlikely and thus is not a basis for refusing to authorize mobile service in the 28 GHz band, and the Commission declines to establish any regulatory limit on aggregate power levels.

31. Under the Commission's rules, FSS is secondary to LMDS fixed and mobile operations in the 28 GHz band. The Commission's rules specifically state, ''FSS is secondary to LMDS in [the 27.5–28.35 GHz] band.'' Internationally, this band is allocated to the FSS and the fixed and mobile services on a co-primary basis. The Commission recognizes that there are non-U.S. licensed FSS networks in this band, and that the United States needs to protect those systems consistent with its relevant international obligations. This framework exists in other bands where FSS shares spectrum with terrestrial services internationally, such as the C-band. Contrary to Lockheed Martin's assertions, the Commission is not violating U.S. international treaty obligations by adopting rules that will enable the provision of UMFUS in the 28 GHz band without first resolving potential aggregate interference issues. As discussed below, the Commission concludes that the risk of aggregate interference is low. In the event, however, that there is an instance where a non-U.S.-licensed FSS network receives harmful interference, the Commission intends to address such interference in accordance with applicable U.S. international treaties, and will monitor industry developments to that end. The Commission rejects ViaSat's argument that the Commission granted FSS primary status over mobile operations. ViaSat relies in part on the following passage from the *LMDS First Report and Order:*

> We are designating discrete spectrum bands for specific types of systems. Services designated for domestic licensing priority are specified in capital letters in the graphic depiction of the band plan. These services have licensing priority vis-à-vis any other type of service allocated domestically or internationally in the band. Lower-case letters indicate services in a particular band segment which also have licensing priority vis-à-vis any third service allocated domestically or internationally in the band, but have no licensing priority over the service in capital letters in the band segment and must operate on a non-interference basis and must accept interference vis-à-vis that service.

Contrary to ViaSat's view, the Commission can, and in fact did, establish priority for mobile services through its service rules. ViaSat claims that FSS retains primary status over any new mobile service, because the Commission established priority only for LMDS. This argument fails because mobile service is part of LMDS, and is not a ''third service'' or a ''new service.'' The mobile allocation already existed at the time of the *LMDS First Report and Order,* but the Commission made no distinction between fixed and mobile service in terms of priority—it established priority for a terrestrial service over a satellite service. The Commission contemplated that LMDS, the designated primary service, could eventually obtain mobile rights. Indeed, it ''kn[e]w of no reason why we would not allow mobile operations if they are proposed and we obtain a record in support'' thereof. It declined to authorize mobile operations ''for now,'' not because of concerns about coexistence with FSS (which it had already designated as secondary due to the infeasibility of sharing at that time), but because it was unclear that the technology existed to facilitate mobile operations and whether mobile operations could share with fixed operations. The actions, the Commission is taking, are precisely the actions the Commission contemplated when it established service rules for LMDS—adding mobile rights to existing LMDS licenses.

32. The Commission also notes that if the Commission had intended to make mobile operations secondary to FSS, it could have very clearly done so by explicitly stating that FSS had priority over the mobile allocation. In the *LMDS First Report and Order,* when the Commission intended to discuss the mobile allocation, it specifically referred to the mobile allocation. If the Commission intended to make mobile secondary to FSS, it could have specifically referred to mobile instead of a ''third service.'' Indeed, when the Commission talked of mobile services in the 28 GHz band, it said that authorizing such services ''would be consistent with the Commission's goal of providing LMDS licensees with maximum flexibility in designing their systems.'' If the Commission intended to treat mobile services independently of LMDS, it would not have referred to providing flexibility to LMDS licensees.

33. FSS operators received multiple notices of their secondary status. Indeed, in the *LMDS First Report and*

Order, the Commission specifically rejected a request from GE Americom to provide some protection to FSS gateways as ''inconsistent with the designation of FSS for secondary licensing priority in the 27.5–28.35 GHz band.'' As ViaSat recognizes, FSS license conditions in the 28 GHz band explicitly state that FSS operations in the 28 GHz band are on an ''unprotected, non-harmful interference basis relative to LMDS.'' The *NPRM* in this proceeding noted, ''Twenty stations are licensed for Earth-to-space transmissions on a secondary basis in the 28 GHz band. . . .'' That much being said, the Commission recognizes that FSS operators use the 28 GHz band to provide services and intend to provide additional services in the future.

34. However, the record in this proceeding does not demonstrate that the rules that the Commission adopted would significantly risk harmful interference to satellite operations because of aggregate interference received at the satellite receiver. Under the existing rules, LMDS stations have a maximum authorized transmit power of 55 dBW (85 dBm), versus the 75 dBm the Commission adopted. Furthermore, LMDS can operate in either point-to-point or point-to-multipoint mode, and there are no existing limits on upward emissions. In contrast, the Commission adopted lower power limits for base-station and mobile operations in UMFUS. Furthermore, the systems contemplated for these bands have several characteristics that will tend to limit transmissions towards satellite receivers. As noted in the *NPRM,* most industry evaluations of potential mmW mobile base station deployments appear to assume that such stations' antennas will be tilted downward at a slight angle, typically from a street lamp pole or a location on a building at a similar height. Intel explains that this configuration is necessary not only to direct transmissions toward user equipment but also to limit interference between adjacent cellular base stations. In fact, says Intel, failure to adopt this downtilt configuration would impair throughput to users at cell edges by about 60 percent. Although ViaSat expresses concern that in some limited locations mobile base stations might be directed skyward to provide coverage to users in the upper floors of tall buildings, because of this need for downward coverage such mobile providers can rely on wired in-building facilities where necessary. Mobile base stations in this band will probably use antenna systems that employ dynamic beamforming techniques to produce beams as narrow as 1.0 degree, which will substantially reduce the likelihood that such beams will point directly at satellite receivers. User equipment will also employ antenna arrays to generate dynamic beamforming, varying both azimuth and elevation in order to maintain signal connections with their base stations. Again, terrestrial operators are likely to deploy this technology of their own accord: By Intel's analysis, choosing not to use dynamic beamforming technology would reduce throughput at cell edges by about 70 percent. Base stations and user equipment will also likely employ dynamic power control, both to avoid draining batteries and to limit intersystem interference. In fact, both base stations and user equipment could be entirely silent much of the time; terrestrial operators report that, in current deployments, network loading rarely exceeds 30 percent. All of these features will limit the extent of skyward transmissions from terrestrial mobile systems.

35. In addition, it is important to recognize that most mmW transmissions will likely not occur in environments that have line of sight to satellites. By some estimates, as much as 80 percent of smartphone use occurs indoors, with much of the remainder occurring in vehicles. Because mmW signals are heavily attenuated by exterior walls, roofs and windows, signals originating from handheld smartphones will be largely confined within any buildings or vehicles where they are used, and would need to be relayed to mobile base stations by other devices with exterior antennas that will likely have sufficient beamforming ability to limit skyward transmissions. In principle, spilling signal power uselessly into outer space would represent a source of inefficiency, so it is likely that dynamically beamformed signals will be aimed at receivers on the ground or not far above it. The most vulnerable satellites—those situated at elevations close to the horizon—will be protected further by the path losses that terrestrial signals will encounter in the cluttered environments of street canyons, suburban foliage, and other obstacles.

36. The Commission has reviewed the studies submitted by the various parties, including the satellite operators. As discussed in the Technical Rules section, *infra,* the Commission concludes that the various studies submitted by the parties do not support establishment of an aggregate interference limit. From the satellite operators' perspective, part of the challenge is that mmW mobile is a new, rapidly evolving technology, and the terrestrial mobile industry is still developing system designs and propagation models. Even so, there has been substantial progress in that regard, and the interference models submitted by satellite operators in this proceeding do not take into account prospective features of mmW mobile systems that are readily accessible on the public record. O3b, for example, assumes that mmW mobile user equipment will employ no beamforming at all, and will generate omnidirectional signals. Interference models submitted by other parties do not adequately account for, and in some cases do not take into account at all, antenna beamwidths, downtilts, beamforming, power control, traffic patterns, number of simultaneously transmitting stations, the obstruction losses that terrestrial signals are likely to encounter before reaching satellites at low elevations, and the fact that the majority of transmissions will occur indoors. Terrestrial operators have every incentive to design networks that direct the signals they are transmitting to the locations of the receivers—either another fixed point on a vertical structure, or a mobile unit within a couple of meters of the ground—especially given the propagation characteristics of these frequencies. Furthermore, mobile units, which are likely to be transmitting at angles more skyward, are operating at powers significantly lower than base stations. These are both true regardless of the types of systems that are ultimately deployed in these bands. Nonetheless, given the wide variety of deployments and uses the Commission expects to see in these bands, it would be inappropriate to universally mandate these design features in every deployment, in the absence of more credible support for the proposition that satellite systems will receive harmful interference from mmW mobile systems.

37. The Commission's decision not to set specific limits on aggregate interference is consistent with the Commission's treatment of that issue in other bands. In AWS–3, the Commission declined to establish aggregate power limits to protect Federal satellites in the 1761–1780 MHz band because it was unlikely that aggregate interference was likely to occur. Similarly, in the 10.7–11.7 GHz band, which is shared between FSS and Fixed Service (FS), the Commission held with respect to concerns regarding a different type of aggregate interference: ''[W]e view rule changes that would allow greater FS use of the 11 GHz band as beneficial to the

public interest, so long as existing users would not be harmed.'' Similarly, the Commission sees great public benefit to more intensive terrestrial use of the 28 GHz band where terrestrial use is the primary designated service in the band.

38. The Commission has concluded that the satellite industry has not shown that it has a legal right to protection from aggregate interference or that harmful aggregate interference is likely to occur from the mobile operations now being authorized for LMDS. The Commission also recognizes that SES, EchoStar, and ViaSat believe that satellite and mobile operations can coexist. Nonetheless, the Commission is sensitive to the concerns raised. The Commission notes that the satellite and wireless industries have begun the process of modeling the terrestrial systems under consideration for this band to provide further information concerning their potential impact on satellites. The Commission encourages both industries to continue working cooperatively on this issue, including by submitting any relevant data demonstrating changes in the amount of aggregate interference on record as UMFUS services are deployed. The Commission directs the International Bureau (IB), the Office of Engineering and Technology (OET), and the Wireless Telecommunications Bureau (WTB) to jointly establish a separate docket that parties can use to file the relevant data and analyses, and the Commission reserves the right to revisit this issue should additional information or other circumstances warrant further Commission review or action.[2]

5. Band Plan

39. The Commission will license the 28 GHz band as two 425 megahertz blocks. The Commission believes 425 megahertz channels will be sufficient for a licensee to provide the type of high data rate services and other innovative uses and applications contemplated for this spectrum. The fact that several carriers support dividing the bands into multiple blocks supports that conclusion. The Commission also agrees with T-Mobile that there are benefits to competition in allowing multiple licensees to provide service in the 28 GHz band.

40. The Commission emphasizes that existing LMDS Channel A1 licensees will receive licenses for both channels, so they will maintain their existing license rights. To the extent licensees are interested in having a contiguous block of 850 megahertz of spectrum, they are free to acquire both licenses, subject to compliance with the Commission's spectrum aggregation policies.

B. 39 GHz Band (38.6–40 GHz)

41. In the *NPRM,* the Commission proposed to develop service rules for mobile operations in the 38.6–40 GHz band (the ''39 GHz Band''). This band is currently allocated to the fixed, fixed satellite (space-to-Earth), and mobile services on a primary basis for non-Federal use. There are Federal FSS (space-to-earth) and Mobile Satellite Service (MSS) (space-to-Earth) allocations in the 39.5–40 GHz band, limited to military systems.

42. The 39 GHz band is licensed by EA and consists of 14 blocks of 50 by 50 megahertz channels. Out of the 2,464 possible terrestrial fixed service EA licenses available in this band (14 channel pairs for each of 176 EAs) only 870 licenses currently exist. Other licenses were voluntarily cancelled or terminated for failure to meet substantial service requirements. In addition, there are currently 229 active Rectangular Service Area (RSA) licenses that predate the creation of the EA licenses in which the licensees self-defined their service area, and where they retain the exclusive right to operate. The populations in licensed areas (both EA and RSA licenses) vary by channel, but in aggregate they cover about 49 percent of the U.S. population. The Commission has previously indicated that licensees of the band could have the flexibility to provide mobile service and stated the belief that ''the issue of technical compatibility of fixed and mobile operations within a service area is one that can and should be resolved by the licensee.'' The Commission declined, however, to permit mobile operations until it conducted a separate proceeding to resolve any inter-service and inter-licensee interference issues. As a result, no mobile operations currently exist in the 39 GHz band. To accommodate high-density fixed terrestrial systems under a ''soft segmentation'' band plan, the Commission has established lower PFD limits for satellite transmissions in the 37.5–40 GHz band than in other satellite bands. The Commission notes that there are no commercial satellite operations in the band.

1. Suitability for Mobile Service

43. The Commission will authorize mobile operation in the 39 GHz band (38.6–40 GHz), and the Commission will issue new licenses granting existing and new 39 GHz licensees both fixed and mobile rights. The Commission believes that the significant bandwidth available in this band will help to accommodate the expected continued rise in demand for mobile data. Commenters, including incumbent terrestrial licensees, overwhelmingly support opening the band for mobile use and expanding their reach to mobile. The Commission agrees and believes the band can be used by both mobile and satellite because satellite use can be accommodated with minimal impact on terrestrial service. The Commission created the service rules to enable such mobile use, and the Commission detailed the means by which satellite must cooperate with new mobile services in these bands to reduce interference and improve service.

2. Licensing the 39 GHz Band

a. Use of Geographic Area Licensing

44. The Commission adopted geographic area licenses that will grant licensees the flexibility to provide fixed and mobile services. As with the 28 GHz band, the Commission finds that in this band, geographic area licensing will expedite deployment, provide licensees with the flexibility to provide a variety of services, and is consistent with the existing licensing scheme in the band. The Commission will maintain the current co-primary Federal FSS and MSS allocations and associated regulations in this band. The Commission also finds that the presence of incumbent geographic area licenses in a large part of the country renders the 39 GHz band a poor candidate for implementing an SAS-based sharing model.

b. License Area Size

45. The Commission will license the 39 GHz band using PEAs, because the Commission finds that use of this license area size will facilitate access to spectrum and the rapid deployment of service in the band. PEAs are smaller than BTAs or EAs, and therefore are more realistically obtainable by smaller bidders, yet are larger than counties which various commenters deem too small. Licensing the 39 GHz band on a PEA basis strikes the appropriate balance between facilitating access to spectrum by both large and small providers and simplifying frequency coordination while incentivizing investment in, and rapid deployment of, new technologies. PEAs also nest into

[2] In the *NPRM,* the Commission also sought comment on the possibility of repealing the prohibition on FSS user equipment in the 28 GHz band. While there has been considerable comment on this issue, in light of the evolving nature of technology and deployment in the band, the Commission does not believe the issue is ripe for action at this time. Accordingly, the Commission will consider this issue in the future, either in this proceeding or in a separate proceeding.

EAs but can also be broken down into counties, allowing operators to combine or partition their PEAs into the license areas of their choice. The Commission believes that the size and ability to combine/partition will aid in the rapid deployment of these licenses. The Commission's decision to license the 39 GHz band on a PEA basis is distinguishable from the Commission's decision to use counties as the license area in the 28 GHz band, because, as previously discussed, the latter band is currently licensed by BTAs and cannot readily be reformed into either EAs or PEAs.

3. Mobile Rights for Incumbents

46. The Commission adopted its proposal to grant mobile operating rights to existing active 39 GHz licensees for the same reasons the Commission granted mobile operating rights to LMDS incumbent licensees. Granting mobile operating rights to existing licensees will expedite the deployment of service, minimize the difficulties involved in coordinating fixed and mobile deployments, and provide a uniform licensing scheme throughout the United States. In contrast, separating fixed and mobile rights through assignment of overlay licenses would delay the implementation of mobile service. The Commission remains concerned that awarding fixed and mobile rights separately would lead to disputes between fixed and mobile licensees that could make it more difficult for both licensees to provide service.

47. The Commission recognizes that awarding mobile rights to incumbent licensees could be viewed as a windfall to those licensees, although the Commission contemplated granting mobile rights when it first created LMDS. Here, the benefits of expediting service and facilitating the coordination of fixed and mobile service outweigh any potential disadvantages of granting mobile rights to incumbents.

4. Non-Federal Satellite Terrestrial Sharing—Licensing of Gateway Earth Stations

48. The *NPRM* invited comments on three issues relating to FSS use of the radiofrequency spectrum from 37.5 GHz to 40 GHz, encompassing both the 38.6–40 GHz (39 GHz) band and the 37–38.6 GHz (37 GHz) band. The first question was whether the Commission should make any changes to its treatment of gateway earth station applications; the second, whether it would be reasonable to eliminate the prohibition against ubiquitous deployment of user equipment; and the third question, whether it would be feasible to allow satellite operators to increase their PFDs above existing limits during heavy rain storms. In none of those cases did the Commission foresee any reason to differentiate between the 37 GHz and 39 GHz bands with respect to satellite sharing issues.

49. The U.S. Table of Frequency Allocations accords co-primary status to FSS earth stations in the 37.5–40 GHz frequencies, but Commission rules provide that gateway earth stations in the 39 GHz band may be deployed only if the FSS licensee obtains a 39 GHz license for the area where the earth station will be located, or if it enters into an agreement with the corresponding 39 GHz licensee. The Commission mentioned the changes that the *NPRM* was proposing for the licensing of satellite operations in the 28 GHz band and sought comment on whether similar changes should be adopted for the 37.5–40 GHz channel groups. The *NPRM* asked whether the Commission should establish a waiver process by which non-Federal FSS earth stations in the 37.5–40 GHz bands could acquire co-primary status in areas where there is no geographic service area licensee, if they can demonstrate that doing so would not have a negative impact on future terrestrial service. The Commission asked if the fact that 37.5–40 GHz FSS operations are space-to-Earth, rather than Earth-to-space as in the 28 GHz band, should lead to different answers to these questions. The Commission also sought comment on any other changes it should make to the existing rules.

50. Commenters acknowledge that the space-to-Earth nature of satellite operations in the 37.5–40 GHz bands means that it is earth stations that need protection against interfering signals from terrestrial operations rather than the opposite situation that applies for Earth-to-space operations in the 28 GHz band. EchoStar calculates that satellite earth stations in the 37.5–40 GHz band will need exclusion zones with radii extending no more than about two kilometers. EchoStar states this radius in the 37.5–40 GHz bands is about 12 times the radius (170 meters) circumscribing the exclusion zone that EchoStar says is required for earth stations in the 28 GHz band. The areas required for the resulting exclusion zones would be about 138 times as large—12.6 square kilometers (4.9 square miles) for the 37.5–40 GHz bands versus 0.09 square kilometers (0.03 square miles) for the 28 GHz band. By comparison with the 28 GHz band, therefore, accommodating satellite earth stations in the 39 GHz band is approximately two orders of magnitude more difficult.

51. The smallest counties mentioned in the Commission's discussion of satellite interference zones for the 28 GHz band each cover about 80 square kilometers. The exclusion area that EchoStar says is required for the 37.5–40 GHz frequencies would cover about 16 percent of such a county—a proportion that could seriously impair the growth prospects for mmW mobile. The challenge is less daunting when the Commission considers the possibility of authorizing earth station sites on a PEA basis rather than a county basis. The average PEA in the 48 contiguous U.S. states covers about 18,692 square kilometers (7,217 square miles). Therefore, the requisite exclusion zone would cover about 0.0674 percent of the average PEA's land mass in the contiguous U.S. If people were evenly distributed across this hypothetical average PEA, substantially less than 0.1 percent of its population would fall in the earth station's exclusion zone.

52. These calculations show that some PEAs should be able to host a 39 GHz earth station without placing more than 0.1 percent of the PEA's population in the earth station's exclusion zone. Most PEAs cover substantially less territory than the average PEA does; *i.e.,* even for some PEAs, a five square-mile exclusion zone might affect an unacceptably high proportion of their populations. But satellite operators will not necessarily need to deploy 39 GHz earth stations in the smaller, more densely populated PEAs. For satellite gateway earth stations in particular, the *sine qua non* is not proximity to population centers, *per se,* but access to long-haul, high data-rate Internet facilities. Direct access to long-haul Internet nodes is available not just in major population centers but also in some of the more remote parts of the U.S. Many of those nodes are in places with comparatively low population densities—*i.e.,* near areas where it should be possible to deploy earth stations without creating exclusion zones that affect unacceptably high proportions of the population. In addition, as the Commission suggested for the 28 GHz band, satellite operators can substantially reduce the sizes of the exclusion zones that they require by constructing artificial site shields or by taking advantage of naturally occurring terrain features. Spatial analysis software can process digital elevation data to identify geographic depressions, which are capable of providing natural site-shielding in all directions. For earth stations that communicate only with geosynchronous satellites, more limited site shielding would typically suffice. In

addition, satellite operators may continue to protect their earth stations from interference using any of four market-oriented mechanisms: Purchasing geographic area licenses at auction, acquiring licenses from existing licensees, obtaining partitioned segments of existing geographic area licenses from existing licensees, or obtaining contractual agreements from nearby licensees not to interfere into their earth station operations.

53. Based on those considerations, the Commission will authorize non-Federal satellite earth stations in the 39 GHz band on a first-come, first-served basis that will entitle them to protection from terrestrial transmissions subject to the following conditions.[3] First, the earth station applicant must define a protection zone in its application around its earth station where no terrestrial operations may be located. The FSS applicant may self-define this protection zone, but it must demonstrate using reasonable engineering methods that the designated protection zone is no larger than necessary to protect its earth station. Second, the Commission will authorize a maximum of three protection zones in each PEA, so the applicant must demonstrate that there are no more than two existing protection zones in the PEA or demonstrate that its protection zone will be contiguous to any preexisting satellite protection zone. Third, the applicant must demonstrate the existing and proposed protection zones, in the aggregate, will not cover more than 0.1 percent of the PEA's population.[4] Fourth, the applicant must show that the protection zone does not infringe upon any major event venue, arterial street, interstate or U.S. highway, urban mass transit route, passenger railroad, or cruise ship port. Finally, the earth station applicant must coordinate with terrestrial fixed and mobile licensees whose license areas overlap with the protection zone, in order to ensure that the protection zone does not encompass existing terrestrial operations. The coordination requirements will be based on the Commission's existing requirements contained in § 101.103(d) of the Commission's rules. If the earth station is authorized, UMFUS licensees will be prohibited from placing facilities within the protection zone absent consent from the FSS operator, and the FSS operator must respond in good faith to requests to place facilities within a protection zone.

5. Band Plan

54. The Commission will create seven 200 megahertz bands out of the 39 GHz band (38.6–40 GHz). The Commission finds that this channel size is large enough to take advantage of the data throughput capacity of these bands yet yields a sufficient quantity of channels in the band to provide access to multiple operators simultaneously. The Commission agrees with the comment that next generation 5G networks are expected to depend in part on higher frequencies, increased spectral efficiency and greater density of cell deployments and that these factors alone may be insufficient to meet the expected tenfold increases in peak data rates and user throughput without using ultra-wide channel bandwidths of at least 200 MHz. These wider channels available at higher frequencies could allow for higher data rates in environments constrained by power or signal-to-noise ratios. By facilitating higher throughput, wideband channels will thereby permit more users to simultaneously use the band.

55. The Commission also modified the current band plan that is based on paired spectrum blocks in favor of larger, unpaired channels to enable Time Division Duplexing (TDD) which commenters believe will best enable a 5G mobile service environment. Straight Path asserts that TDD is preferable in these frequencies given the current lack of adequate frequency duplexers capable of meeting the performance, cost or form factor requirements necessary to facilitate Frequency Division Duplexing (FDD) at these higher wavelengths. TDD does not require a frequency duplexer and allows flexible downlink-uplink ratios that depend on traffic and result in efficient utilization of spectrum. While these and other commenters note the benefits of TDD in the context of 5G, commenters overwhelmingly support rules that allow for flexible duplexing schemes, and the rules the Commission adopted will allow any type of duplexing. Licensees may also continue to offer FDD service by acquiring and pairing multiple spectrum blocks. Because the existing channel plan favors FDD operation and limits flexibility to accommodate other duplexing schemes, reconfiguring the channel plan will remove obstacles to TDD schemes while still allowing for flexibility to accommodate FDD. Furthermore, larger bandwidths may optimize traffic management and improve system performance because a single, wide carrier permits centralized spectrum management whereas aggregation and use of various narrow bandwidth channels requires greater power consumption and equipment complexity. Finally, 200 megahertz channels will potentially create several empty channels for new entrants after incumbent licensees swap or repack their existing systems into consecutive or adjacent channels. Given all of the considerations above, the Commission finds that 200 MHz channels are the best band size for 39 GHz.

6. Pre-Auction License Reconfiguration

56. Straight Path's proposal contains the clearest delineation of rules and steps necessary to align adjacent spectrum tranches to create contiguous bands—the goal advocated by commenters. The Commission agrees with Straight Path that in EAs where only it holds licenses, the Commission should accept any exchange application in which Straight Path or others propose to acquire the same amount of spectrum in the market that it proposes to relinquish as long as it meets the end goal of creating a contiguous block or blocks of spectrum. In instances where there are multiple geographic area licensees, Straight Path advocates that the Commission should first accept any band plan mutually acceptable to the various licensees as long as it also increases the amount of contiguous spectrum for at least one of the licensees. If licensees do not agree on a band plan, Straight Path argues the Commission should accept applications in which an incumbent geographic area licensee seeks to acquire any contiguous spectrum blocks adjacent to spectrum blocks it already holds subject to two limitations (i) the target spectrum block is not already occupied by another incumbent geographic area licensee; and (ii) the target spectrum block could not be requested by another incumbent geographic area licensee on the grounds that it is adjacent to a block it holds or that it could hold. A licensee should be able to continue to add contiguous unused blocks in a row until it reaches a prohibited block—*i.e.,* a spectrum block that could also be claimed by another incumbent licensee. Straight Path suggests that in this way, contiguous occupied bands could be aligned starting at the lower edge of the band—at 38.6 GHz—and moving up toward 40 GHz. Because the Commission adopted a band plan for the

[3] The Commission adopted a new footnote, NG63, to the Allocation Table that reflects the existing limitation to gateway earth stations. *See* 47 CFR 25.202(a)(1) n.3.

[4] The IB will issue a public notice seeking comment on the appropriate methodology to calculate the 0.1 percent population limit and will also seek comment on best practices for earth station siting to minimize impact on UMFU services, colocation of earth stations, and accommodating multiple earth station interference zones without exceeding 0.1 percent of population in a given PEA.

37 GHz band that provides for continuity of commercial operations across the 37 GHz and 39 GHz bands, when the bands are viewed together, Straight Path's swapping plan results in occupied spectrum in the middle of the combined bands. One alternative might be to push incumbents to the upper end of the band near 39.5 GHz, in order to create larger available swathes of spectrum by combining the lower frequencies with the open bands in the 37 GHz band. However, in the interest of addressing mobile data demand as quickly as possible, 39 GHz licensees at the bottom of the band will provide the first market for mmW mobile equipment as soon as it becomes available, and this will further the goal of interoperability by allowing fixed licensees to more rapidly foster the development of mobile in their bands.

57. Some of the 200 MHz spectrum blocks offered at auction will also contain at least one incumbent RSA licensee occupying some portion of the spectrum. Straight Path argues that where the incumbent geographic license holder is also the RSA licensee, the RSA license will be deemed not to exist and will be cancelled upon an exchange. Otherwise, incumbent licensees will only be permitted to elect to add contiguous channels with greater encumbrances than *vice versa;* accordingly, a geographic area licensee can always opt to exchange a block without an RSA for an adjacent block with an RSA whose operations it will have to protect, and similarly it can always opt to take a license area with a more encumbered RSA over a block it holds with a less encumbered RSA, but it cannot ''upgrade'' to an RSA-free block or a license with an embedded RSA that is less encumbered. Overall, although Intel and Straight Path have argued that EAs are the appropriate geographic area for new licenses given their historical use and the complexity of the swap process, as discussed above, the Commission's preferred license area size for the 39 GHz band are PEAs, and such PEAs neatly fit into the EAs they comprise. Accordingly, once incumbents' spectrum swapping has run its course at the EA level, the resulting license area/band combinations should be further broken down into PEAs, which 'nest' into EAs.

58. The Commission believes this reconfiguration process will yield a band, and licenses, that are more useable by incumbents as well as new entrants for the new flexible use services, including mobile broadband that the Commission is authorizing in this *Report and Order.* Straight Path currently holds 931 licenses out of 1,098. If Straight Path voluntarily reconfigures its rights as it has advocated, this will substantially reduce encumbrances (*i.e.,* remaining RSAs or blocks within EAs that have not been reconfigured) that might exist in new license areas before a future auction. While the Commission adopted a voluntary reconfiguration approach, it is its hope and expectation that all licensees will take advantage of this opportunity to convert their licenses to the new flexible use licensing scheme and band plan. Furthermore, while the Commission adopted a voluntary approach, the Commission notes that under Section 316 of the Act the Commission retains the right to modify any license consistent with the public interest.

C. 37 GHz Band (37–38.6 GHz)

59. The 37 GHz band presents a number of opportunities because, other than a limited number of existing Federal uses that need protection, the band is a greenfield—there are no existing non-federal operations, terrestrial or mobile. In addition, it is adjacent to the 39 GHz band, which presents an opportunity to create a larger, contiguous 37/39 GHz band, subject to similar technical and operational rules. Also, the Federal fixed and mobile service allocations are lightly used. The approach the Commission adopted takes full advantage of these opportunities.

60. Specifically, the Commission can meet the twin goals of expanding commercial access in this band while facilitating continued and expanded Federal use. Because there are both Federal and non-Federal fixed and mobile rights and there are minimal incumbency issues (or an installed base of equipment), the approach the Commission adopted in this band can significantly further the regulatory, policy, and technical approaches to Federal and non-Federal sharing. As discussed in greater detail below, the Commission adopted a band plan that allows for continuity of commercial operations between the 37 and 39 GHz bands, the Commission protects a limited number of Federal military sites across the full 37 GHz band, and the Commission identifies 600 megahertz of spectrum that will be available for coordinated coequal shared access between Federal and non-Federal users. Through this structure, additional proposals in the *Further Notice of Proposed Rulemaking* (*FNPRM*), and the collaborative industry/government process that will take place to further define the sharing process and paradigm, the Commission will take substantial strides forward on Federal and non-Federal sharing in the mmW bands while also making a significant amount of spectrum available for wireless broadband.

1. Suitability for Mobile Use

61. The Commission adopted rules to permit fixed and mobile terrestrial operation in the 37 GHz band to enable as wide a range of services as possible. The Commission finds that there are several important characteristics of the 37 GHz band that make the provision of fixed and mobile terrestrial operations especially promising: It contains 1.6 gigahertz of contiguous spectrum, which could support ultra-high data rates; it is contiguous with the 39 GHz band, which will permit operators to aggregate spectrum across both bands; and it has global co-primary fixed and mobile allocations, which could enable operators to achieve economies of scale. Cisco urges us to proceed cautiously, and Boeing urges the Commission to wait until the studies called for by the WRC–15 are completed, the Commission is persuaded that fixed and mobile terrestrial services can be provided in the 37 GHz band. In this regard, in analyzing the suitability of the 37 GHz band for mobile service, the band is very similar to the 39 GHz band. It has an existing mobile allocation, the propagation characteristics are very similar to the 39 GHz band, and the Commission does not see any inconsistency with other allocations that would make the band unsuitable for mobile service. In terms of timing of the Commission's action, considering the potential benefit for 5G services and the significant lead time that will be necessary to develop the services in this band, the Commission believes that the Commission should move forward and develop fixed and mobile terrestrial services rules for the 37 GHz band. Moreover, as discussed more fully below, the rules the Commission adopted accommodate the needs of National Aeronautics and Space Administration (NASA), National Science Foundation (NSF), the military, and FSS operations in the 37 GHz band as well as Earth Exploration Satellite Service (EESS) (passive) and Space Research Service (SRS) (passive) operations in the adjacent 36–37 GHz band.

2. Licensing the 37 GHz Band

62. The Commission adopted a licensing approach that makes five 200 megahertz blocks available on a geographic area-licensed basis in the 37.6–38.6 GHz portion of the band (upper band segment). The Commission

will make the 37–37.6 GHz block (lower band segment) available for coordinated co-primary sharing between Federal and non-Federal users, where non-Federal rights are granted by rule. The Commission notes that the entire band is subject to Federal co-primary fixed and mobile allocations. The Commission declines to adopt the hybrid authorization licensing scheme because it is unsupported by the record. Specifically, commenters oppose it because they do not believe that the 37 GHz band is appropriate for this particular scheme, though it could be used for other bands. In addition, the satellite industry expresses concern that the hybrid licensing approach does not provide satellite operators with any meaningful certainty that they will be able to expand into the 37 GHz band.

63. Of the three licensing options that the Commission sought comment on in the *NPRM,* the Commission finds that a variation of the Commission's alternative proposal best enables the band to be used for new commercial uses while simultaneously allowing fixed and mobile Federal use to expand. Although there is support in the record to license the entire 37 GHz band by geographic area, the Commission finds that it is in the public interest to license a portion of this band on a non-exclusive shared basis, and to license the remainder of the band by geographic area to give potential licensees additional opportunity to access large blocks of spectrum or to use 37 GHz spectrum in combination with, and similarly to, 39 GHz spectrum. Allowing part of the band to be made available on a non-exclusive, shared basis will promote access to spectrum by a wide variety of entities, support innovative uses of the band, and help ensure that spectrum is widely utilized. Adopting geographic area licensing for the other portion of the band will expeditiously make spectrum available and allow common development of the 37 GHz and 39 GHz bands. Furthermore, users in the shared portion of the band will benefit from efforts by equipment manufacturers and licensees to develop equipment for the portion of the band licensed on a geographic area basis. Thus, the Commission finds that adopting the alternative proposal, as modified below, should promote investment and deployment in both bands. As explained below, the Commission agrees that there are benefits to adopting the same geographic area licensing framework for the 37 GHz and 39 GHz spectrum bands. Also, the Commission finds that adopting the alternative proposal, in addition to other decisions made by the Commission, provides satellite operators the certainty they need to be able to expand their operations into the 37 GHz band in the future.

64. The Commission adopted a modified version of the alternative proposal as follows: The Commission will create a band plan with a 600 megahertz shared block in 37–37.6 GHz and a geographically-licensed portion in 37.6–38.6 GHz. The lower band segment will be fully available for use by both Federal and non-Federal users on a coordinated co-equal basis. Non-Federal users, which the Commission will identify as Shared Access License (SAL), will be authorized by rule. Federal and non-Federal users will access the band through a coordination mechanism, including exploration of potential dynamic sharing through technology in the lower 600 megahertz, which the Commission will more fully develop through the *FNPRM* and through government/industry collaboration. The Commission envisions this segment serving as a proving ground for Federal and non-Federal sharing in the mmW bands, as a way to facilitate expanded Federal use in the band, an opportunity to facilitate lower-cost access to mmW bands, and a means for all providers to gain additional capacity where and when it is needed.

65. As described below, the Commission adopted the same technical rules for the shared band segment as the Commission does for the rest of the 37 GHz band. These technical rules are also consistent with the 39 GHz band. The Commission also adopted an operability requirement that will ensure equipment developed for the 37 and 39 GHz bands is able to operate across the entire 37–40 GHz band. This will help drive scale in the development and access to the equipment, and allow users in the shared portion of the band, including Federal users, to benefit. In order to ensure a sharing environment in 37–37.6 GHz that is predictable, manageable, and efficient, the Commission strongly encourages Federal users to comply with the same technical rules, and will work with National Telecommunications and Information Administration (NTIA) to explore establishment of guidance in its regulations.

66. Following the adoption of this *Report and Order,* the WTB and OET will, in collaboration with NTIA and Federal stakeholders, work with industry stakeholders and other interested parties to further define the sharing framework. The Commission will hold one or more public meetings to examine the state of innovative sharing techniques and technologies and to have an open dialogue about how sharing can best be implemented and achieved in the 37–37.6 GHz band. The Commission strongly encourages both industry and Federal stakeholders to use new and existing experimental testbeds to develop sharing approaches and technologies. Based on stakeholder feedback, the WTB and OET may, jointly with NTIA, issue a public notice seeking comment on a refined and detailed 37 GHz sharing framework. In response to the record developed, the Commission, jointly with NTIA, will establish the 37 GHz sharing mechanism. The Commission believes this inclusive and collaborative process ensures that all parties' needs are met and that an effective and robust sharing mechanism will be developed.

67. In the upper band segment (37.6–38.6 GHz), the Commission will use geographic area licensing with PEAs as the licensing unit, which is consistent with the licenses in the 39 GHz band. In this band, there will be Federal co-primary use coordination zones around 14 military sites where the military will have the right to operate fixed and mobile operations, and the three SRS sites as described below. Non-Federal users will be able to access these locations through a coordination mechanism that will be developed and established by WTB and OET in conjunction with NTIA and announced via Public Notice. The Commission also recognizes that there are existing Federal and non-Federal fixed and mobile allocations in the upper band segment, and in the *FNPRM,* the Commission seeks comment on developing additional criteria under which Federal users can obtain access to the upper band segment.

68. The Commission believes licensing the 37 GHz band in this manner has many benefits. In the lower band segment, the Commission is creating an innovative shared space that can be used by a wide variety of Federal and non-Federal users. SALs will be widely available to provide easy access to spectrum, including for new innovative uses and for targeted access where and when providers need additional capacity. It will help further efforts to facilitate sharing between Federal and non-Federal users, and will give Federal users and consumers an opportunity to take advantage of speed-to-market and lower cost of broadly deployed commercial technologies, and provide Federal users opportunities for current use and future growth. In the upper band segment, the Commission notes that the 37 GHz band and the 39

GHz band will be licensed under the same framework, with identical technical and licensing rules. They will both be licensed by PEAs, which will allow licensees in the 37 GHz and 39 GHz bands to aggregate blocks of spectrum or to pair blocks of spectrum.

69. Below, the Commission discusses in further detail some of the decisions the Commission has made concerning the 37 GHz band. In the *FNPRM,* the Commission seeks comment on refining the sharing framework the Commission adopted.

3. License Area Size

70. The Commission is presented with a unique opportunity to adopt a licensing scheme that will apply to 2,400 megahertz of contiguous spectrum, the upper segment from 37.6–38.6 GHz together with the 38.6–40 GHz band. In the shared band segment, the Commission will authorize fixed and mobile users on a site-based coordinated basis. The Commission believes this approach will allow users to access spectrum where and when it is needed, which will help maximize spectrum by providing opportunities for each user to target just the areas it needs. The Commission is licensing the 39 GHz band by PEA. The Commission's reasons for adopting PEAs as the geographic area for the 39 GHz band apply here as well. Specifically, as the Commission noted with respect to the 39 GHz band, after reviewing the record, the Commission now believes that PEAs strike the appropriate balance between facilitating access to spectrum by both large and small providers and simplifying frequency coordination while incentivizing investment in, and rapid deployment of, new technologies. Thus, the Commission adopts the same geographic license structure for both the upper band segment of the 37 GHz band and the 39 GHz band. This decision will give licensees the flexibility that they need and will encourage investment in a wide variety of services and technologies.

4. Band Plan for Upper Band Segment

71. The Commission will divide the upper band segment into five blocks of 200 megahertz each for non-Federal users. As explained in this *Report and Order,* the Commission is attempting to create a consistent and coherent licensing framework that can be applied throughout the mmW bands, with modifications based on the characteristics of a particular band. The Commission's decision to choose 200 megahertz channels rather than 533 megahertz channels also stems, in part, from the Commission's previous decision to create two licensing segments for the 37 GHz band: A 600 megahertz lower band segment licensed by rule, and a 1,000 megahertz upper segment, which will be licensed geographically by PEA. Adopting 200 megahertz channel sizes for the upper band segment is consistent with the 200 megahertz channels the Commission adopted for the 39 GHz band. Because the Commission licenses the upper band segment of the 37 GHz band and the 39 GHz band by PEA, licensees will have the flexibility to pair their 37 GHz license with a 39 GHz license.

72. In addition, the provision of fixed and mobile terrestrial operations at this frequency will depend upon large blocks of spectrum and a single 200 megahertz block provides a sufficient amount of spectrum for the provision of high-capacity wireless broadband. Those licensees needing more spectrum than a 200 megahertz channel can combine channels to create contiguous blocks of 200 megahertz channels, either within the 37 GHz band or by combining 37 GHz spectrum with 39 GHz spectrum. Licensees also have the option of acquiring 425 megahertz channels in the 28 GHz band.

D. 64–71 GHz Band

73. The Commission is making available the 64–71 GHz frequency band for use by unlicensed devices pursuant to the same technical standards as in the 57–64 GHz frequency band under § 15.255 of the Commission's rules, with slight modifications. As the Commission has consistently stated, it is optimal to include a balance of licensed rights and opportunities to operate on an unlicensed basis in order to meet the country's wireless broadband needs. The Commission's action here creates a 14-gigahertz segment of contiguous spectrum in these frequency bands to encourage the development of new and innovative unlicensed applications, and promote next-generation high-speed wireless links with higher connectivity and throughput, while alleviating spectrum congestion from carrier networks by enabling mobile data off-loading through Wi-Fi and other unlicensed connections.

74. The Commission is adopting rules to allow for unlicensed operations in the 64–71 GHz band, subject to the technical standards in § 15.255, thus creating a contiguous spectrum segment with the 57–64 GHz band. The Commission observes that unlicensed WiGig devices using the 57–64 GHz band are just beginning to be marketed and these products are standardized pursuant to an internationally harmonized channelization scheme, which should promote their growth and usage. Making available additional spectrum contiguous to the existing 57–64 GHz band may enable higher throughputs and enhanced use of present spectrum, as well as to permit an increase in the number of simultaneous high-bandwidth users. The Commission agrees with Intel that a lesser amount of spectrum would limit the growth potential of 60 GHz applications. The Commission also agrees with the WISPA that ''because ITU may study a band is an insufficient reason for the Commission to delay making a valuable spectrum resource available for unlicensed use.'' The Commission acknowledges that eventual harmonization with international requirements will benefit consumers by promoting a global marketplace and enhancing the international competitiveness of U.S. manufacturers. However, notwithstanding a desire for harmonization with international standards, the Commission determines to make these frequencies available for unlicensed use based on the Commission's analysis of U.S.-specific factors. Here, the Commission determines that the Commission should not wait for the outcome of the ITU study of this band, contrary to what T-Mobile advocates, because that could take years, leaving 5 gigahertz of spectrum to lie fallow in the meantime, when unlicensed applications are ready in the very near future to make use of this spectrum, given current planned deployments of WiGig products in the adjacent 57–64 GHz band.[5] In addition, note that spectrum characteristics vary at different frequencies, due to different propagation losses and other atmospheric and sharing conditions, thus a strict linear comparison per frequency unit of the Commission amounts in different frequency bands as ''gigahertz parity'' (*e.g.,* 3.85 gigahertz of spectrum in lower bands vs. 14 gigahertz of spectrum in upper bands) is not a valid comparison. Based on the above, the Commission is permitting use of the 57–71 GHz band by unlicensed devices pursuant to the technical rules in § 15.255.

75. With respect to the additional requests from Microsoft *et al* to extend

[5] The Commission also notes that the ''study'' of a frequency band by the ITU does not mean necessarily that the band will be automatically designated for licensed use, because licensing of spectrum is deferred to ''the sovereign right of each State to regulate its telecommunication''. *See* International Telecommunication Union, *Constitution and Convention* (*http://www.itu.int/en/history/Pages/ConstitutionAndConvention.aspx).*

the band up to 72.5 GHz, and to allow indoor use of the 72.5–76 GHz band by unlicensed devices, the Commission does not find that additional spectrum above and beyond the very large 14-gigahertz of contiguous spectrum in the 57–71 GHz band that the Commission is providing for unlicensed operations herein is warranted at this time, due to the presence of the numerous existing fixed links in the 71–76/81–86 GHz bands. When the Commission adopted rules for licensed operations in these bands in 2003, it did not permit unlicensed sharing of these bands because ''an underlay of unlicensed devices in the bands could detrimentally affect the quality and buildout of service.'' In addition, the fixed point-to-point equipment that has been developed for deployment in the 71–76 GHz and 81–86 GHz bands were not engineered to operate in a part 15 unlicensed environment. Subsequently, in 2014, the Commission adopted part 15 rules to permit a special type of unlicensed device, level probing radars (LPR), to share the 75–85 GHz band; these devices, however, must be operated in a vertically downward position at fixed locations with severe limitations on antenna beamwidth. In contrast, the 5G unlicensed transmitters envisioned here would be both mobile and fixed and would not have such limitations. The Commission finds that parties requesting to extend the band beyond 71 GHz for unlicensed operation did not submit any persuasive technical arguments to prove that unlicensed sharing with the 71–76/81–86 GHz licensed services is feasible at this time. Accordingly, the Commission denies these requests at this time.

E. Federal Sharing Issues

76. Many bands above 24 GHz have Federal allocations on a primary basis. As the Commission continues to increase flexibility in the non-Federal use of these bands, the Commission must consider appropriate mechanisms and tools to share these bands that recognize the co-primary rights in these bands. In this *Report and Order,* the Commission facilitates sharing in the 39.5–40 GHz band and 37–38.6 GHz band, including through new sharing schemes that promote dynamic and flexible access in the 37–37.6 GHz band. In order to continue to evolve spectrum access and sharing regimes that meet both Federal and non-Federal needs, it will be imperative for all stakeholders, including wireless and satellite industries, to engage proactively to help shape these solutions.

1. 39.5–40 GHz

77. The 39.5–40 GHz portion of the 39 GHz band is allocated to the Federal FSS and MSS a primary basis, limited to space-to-Earth (downlink) operations. However, Federal MSS earth stations in this band may not claim protection from non-Federal fixed and mobile stations in this band.

78. In the *NPRM,* the Commission explained that when the *39 GHz Report and Order* was adopted, Federal use of the band was limited to military systems in the 39.5–40 GHz band segment, that the Department of Defense (DoD) stated that it had plans to implement satellite downlinks at 39.5–40 GHz in the future, and that the NASA identified 39.5–40 GHz as a possible space research band to accommodate future Earth-to-space wideband data requirements. The *39 GHz Report and Order* expressed optimism that such plans would not affect the continued development of the 39 GHz band for non-Federal use, but the Commission said that it intended to address those interference issues in a future, separate proceeding that would focus on developing inter-licensee and inter-service standards and criteria. At present, the U.S. Table of Frequency Allocations provides that Federal satellite services in the 39.5–40 GHz band are limited to military systems.

79. Although only four commenters responded to the Commission's questions on these issues, all four agreed that it is possible for Federal and non-Federal operations to share the 39 GHz band. They also agreed that the Commission should adopt coordination zones to mitigate interference between Federal and non-Federal operations. For instance, AT&T argues that the Commission should adopt coordination zones rather than novel spectrum sharing techniques because coordination zones balance the twin goals of efficient spectrum utilization and the prevention of harmful interference to incumbents. Intel argues that portions of the band that are strictly Federal use could be separated from those for commercial use. Cisco states that while coordination will have to be done by the Commission staff and their counterparts at NTIA, co-existence is achievable. Finally, Nokia argues that the Commission should continue work with NTIA and other Federal agencies to minimize Federal coordination zones, which would maximize the value of the spectrum.

80. In 2016, NTIA sent a letter to the Commission addressing issues raised in the *NPRM,* regarding, in part, military operations in the 39.5–40 GHz portion of the 38.6–40 GHz band. NTIA explained that the 39.5–40 GHz band is allocated to military MSS and FSS earth stations. Federal MSS earth stations cannot claim protection from non-Federal fixed and mobile stations as specified in footnote US382 of the table of frequency allocations. However, Federal earth stations in the MSS are not required to protect non-Federal fixed and mobile services. NTIA stated that given the existing regulatory constraints in the 39.5–40 GHz band, the *NPRM's* proposed non-Federal fixed and mobile operations will not impact Federal satellite operations in the 39.5–40 GHz band.

81. The Commission concludes that it is possible for Federal operations to share the band with non-Federal fixed and mobile terrestrial operations because the protections offered by footnote US382 are sufficient to protect both Federal and non-Federal operations in this band. Thus, no changes to the Commission's rules are necessary.

2. 37–38.6 GHz

82. The Commission concludes that non-Federal fixed and mobile operations can share the 37–38 GHz band with SRS downlink operations under certain conditions. First, as a result of discussions between NTIA and the Commission, NTIA indicated that it would request protection for only three SRS earth station sites: Goldstone, California; White Sands, New Mexico; and Socorro, New Mexico. Second, to address NTIA's recommendations, the Commission will establish coordination zones for these three sites by adding a footnote to the US Table of Allocations listing the locations to be protected and their respective coordination zones. Third, with respect to operations, at Green Bank, West Virginia, NTIA indicated that since Green Bank, West Virginia is located in an existing quiet zone, any new or modified stations including in the fixed and mobile services, within the zone are required by § 1.924(a) of the Commission's rules to notify the National Radio Astronomy Observatory (NRAO), and thus Green Bank would not be included in the footnote. Therefore, the Commission adopted footnote US151, which requires that, in the 37–38 GHz band, fixed and mobile stations not cause harmful interference to Federal SRS earth station at three sites and that non-Federal applications for such use be coordinated with NTIA in accordance with new § 30.205 of the Commission's rules.

83. The Commission concludes that non-Federal fixed and mobile operations can share the 37–38.6 GHz band with DoD operations. With regard

to Federal co-primary access to the 37 GHz band, the Commission will adopt rules that entail the coordination zones recommended by NTIA for the 14 military sites, and the ability for Federal agencies to add future sites on a coordinated basis. The Commission will make the 37–37.6 GHz block (lower band segment) available for coordinated co-primary sharing between Federal and non-Federal users, where non-Federal rights are granted by rule. This framework will facilitate access by DoD and other Federal users. In the *FNPRM,* the Commission seeks comment on defining the sharing framework in greater detail. In the upper band segment, the Commission seeks comment on facilitating Federal coordination with licensees for access to licensed areas.

84. The Commission also does not believe that it is necessary to take action to protect the weather satellites, which according to Committee on Radio Frequency (CORF), will operate above 37 GHz until at least 2020 because it will take a significant amount of time for mmW devices to be developed and deployed in the 37 GHz band. Therefore, the Commission expects that relatively few mmW devices will be operating in the band while the weather satellites are still in use.

85. Under the plan the Commission adopted, the Commission enables the deployment of new commercial services while protecting Federal agency missions. This balances the needs of commercial operators with the needs of Federal agencies for protection and future growth by creating an environment where Federal and non-Federal users can share the band on a co-primary basis and providing enough certainty to future commercial users to stimulate investment in the spectrum.

3. Passive Services Below 37 GHz

86. The Commission believes that the out-of-band emission (OOBE) limit that the Commission adopts in this *Report and Order* will provide adequate protection to the passive sensors in the adjacent 36–37 GHz band. The OOBE limit will keep emissions from an UMFUS device into the 36–37 GHz band well below the −10 dBW level specified by footnote US550A. The Commission notes that the −10dBW power limit was adopted to protect passive sensors in the 36–37 GHz band in accordance with ITU Resolution 752 (WRC–07). Because this limit was adopted by the ITU to protect passive sensors from harmful interference from fixed and mobile transmitters in the 36–37 GHz band, the Commission concludes that it will provide appropriate protection to the passive sensors from transmitters in the adjacent band.

87. The Commission will not adopt a guard band at 37 GHz to protect the EESS and SRS in the 36–37 GHz band as suggested by CORF and IEEE Frequency Allocations in Remote Sensing (FARS). Neither CORF nor IEEE FARS make a specific recommendation on the necessary size of the guard band, although CORF requests a guard band of at least 100 MHz. Because a guard band will reduce the spectrum available for mmW devices, the Commission does not want to take this step without compelling evidence that it is necessary. No one has provided information on the specific benefits and necessity of adopting a guard band of at least 100 MHz to protect EESS and SRS. Given the lack of data supporting adoption of a guard band, the Commission believes that the out-of-band emission limit that the Commission has adopted will provide adequate protection to the EESS and SRS without the need for a guard band at 37 GHz.

88. With regard to protecting radio astronomy at the three locations specified by CORF, the Commission is not convinced that additional measures are needed to protect radio astronomy. The radio astronomy observations that CORF is concerned about will be conducted in the 36.43–36.5 GHz band, which is 500 megahertz from the 37 GHz band, so the emission limits that the Commission is adopting for mmW devices should sufficiently protect radio astronomy.

F. Licensing, Operating, and Regulatory Issues

1. Creation of New Rule Service and Part

89. The Commission adopted in its proposal to create a new service, the UMFUS under a new part 30 of the Commission's rules to include the 28 GHz, 39 GHz, and 37 GHz bands. Licensing the millimeter wave bands under part 27, as CTIA suggests, would produce a less flexible regime than the Commission intend while the rules the Commission adopted in part 30 will provide much of the flexibility present in the part 27 rules. Part 27 would be a poor fit for the point-to-point services currently operating in the 28 and 39 GHz bands, and for the backhaul uses other licensees may wish to include in their services. Part 96, which Google suggests, is designed for a specific regime of intensive, three-tier sharing. As the Commission is not adopting this type of sharing regime for these bands at this time, using this rule part would be inappropriate. The Commission concludes that establishing a new rule part will allow us to have one unified set of rules governing the various types of operations the Commission contemplates licensees will offer, which will provide more clarity to licensees and more accurately reflect the nature of these licenses.

2. Regulatory Status

90. The Commission adopted in its proposal from the *NPRM* to implement a flexible regulatory framework for the UMFUS. As the Commission proposed, UMFUS licensees in the 28, 39, and 37 GHz bands will be able to choose the regulatory status (common carrier, non-common carrier, or both) that best fits their business models and the services they seek to provide. This approach will maintain an open and flexible framework that will allow the business judgments of individual applicants and licensees in these bands to shape the nature of the services offered pursuant to their licenses.

91. The Commission also adopts its proposal to rely on the applicant's designation of its common carrier or non-common carrier status, to enable us to fulfill our obligations to enforce the common carrier requirements contained in statutes and the Commission's regulations. An election to provide service on a common carrier basis requires that the elements of common carriage be present, and the applicant is in the best position to ascertain the presence of these elements. This approach is consistent with the Commission's past decisions regarding the classification of mobile services.

3. Foreign Ownership Reporting

92. Certain foreign ownership and citizenship requirements are imposed by subsections (a) and (b) of Section 310 of the Act, as modified by the 1996 Act. These provisions prohibit the issuance of licenses to certain applicants. For current LMDS, 37 GHz, and 39 GHz licensees, these statutory provisions are adopted in part 101 of the Commission's rules at § 101.7 of the Commission's rules. Specifically, § 101.7(a) prohibits the granting of any license to be held by a foreign government or its representative. Section 101.7(b) prohibits the granting of any common carrier license to be held by individuals that fail any of the four citizenship requirements listed.

93. In the *NPRM,* the Commission tentatively concluded that the Section 310 requirements would apply to any applicants in the UMFUS. Based on this interpretation of the requirements of Section 310, the Commission proposed

in the *NPRM* to include a provision in the new part 30 that would mirror the current § 101.7 of the Commission's rules. In addition, the Commission proposed that all applicants for part 30 licenses be required to report the same foreign ownership information, regardless of the specific type of service they sought to provide. An applicant requesting authorization for broadcast, common carrier, aeronautical en route, or aeronautical Fixed Services, alone or in combination with other services, would be prohibited from holding a license if it met any of the criteria in Section 310(b). If the applicant requested authorization for services other than for broadcast, common carrier, aeronautical en route, or aeronautical Fixed Services, it could hold a license if it met the single alien ownership requirement in Section 310(a), regardless of whether it would otherwise be disqualified for a common carrier authorization. No commenters addressed the issue of foreign ownership reporting requirements, or opposed the Commission's proposals.

94. The Commission adopted in its proposals from the *NPRM* to require the same foreign ownership reporting from all applicants for part 30 licenses, regardless of the specific type of service they seek to provide, and to implement this requirement by including a provision in part 30 that mirrors § 101.7 of the Commission's current rules. This approach will properly implement the restrictions contained in Sections 310(a) and (b) of the Act, and is consistent with the Commission's treatment of flexible use services regulated under part 27 of the Commission's rules.

4. Eligibility

95. In the *NPRM,* the Commission adopted an open eligibility standard for the UMFUS. The Commission noted that an open eligibility approach would not affect citizenship, character, or other generally applicable qualifications that may apply under the Commission's rules. Cisco and CTA support this proposal, citing uncertainty as to how the UMFUS bands will develop, and the need to allow innovation from all parties. No commenters opposed the Commission's proposal.

96. The Commission adopted its proposal to implement an open eligibility standard for the UMFUS. This approach is in keeping with the flexibility of the other licensing rules the Commission adopted in this *Report and Order,* as well as the Commission's treatment of other flexible use services, and will encourage innovation and efficient use of spectrum in these bands.

5. License Term

97. The Commission adopted its proposal to establish a 10-year license term for all UMFUS licenses, and the Commission's proposal to award a renewal expectancy for subsequent license terms if the licensee continues to provide at least the initially-required level of service. While the Commission has pursued shorter license terms and non-renewable licenses in other bands, and continue to believe there are circumstances where those structures are appropriate, here the Commission adopted a 10 year license term that can be renewed. The Commission believes a 10-year license term will give licensees sufficient certainty to invest in their systems, particularly as the new technology is still nascent and will require time to fully develop. If the standards for mobile service in the mmW bands are established by, at the latest, 2020, new licensees would still have the majority of the license term after that point to plan and to deploy service. Neither XO nor any other commenter has presented facts that would justify a longer license term. A 10-year license term is also consistent with existing license terms in a wide variety of services.

98. The Commission also adopted in its proposal to award a renewal expectancy for subsequent license terms if the licensee continues to provide at least the initially-required level of service through the end of any subsequent license terms. That treatment is consistent with the Commission's treatment of many other licensed services and will provide incentives for licensees to continue to provide service.

6. Mobile Spectrum Holdings Policies

99. The Commission found it essential to establish clear and transparent mobile spectrum holdings policies that will promote competition in the future, including competition in the development of 5G services, as well as promote the efficient use of mmW spectrum, and avoid an excessive concentration of licenses. As mentioned in the *NPRM,* demand for mobile service that mmW spectrum is expected to enhance and improve has been increasing, and the Commission's predictive judgment is that interest in the spectrum will be high. Thus, the Commission finds that it would provide regulatory certainty, flexibility in planning, and expedited deployment if the Commission supplies guidance on application of these policies at this stage when the Commission authorizes mobile service in these bands and adopt related rules governing the terms of service, rather than at some later stage. In the Commission's consideration of whether to adopt a mobile spectrum holdings limit for the licensing spectrum through competitive bidding and, if so, what type of limit to apply, the Commission's evaluation includes, among other things, the promotion of competition in relevant markets, the acceleration of private sector deployment of advanced services, and generally managing the spectrum in the public interest. The Commission evaluates how a limit would likely affect the quality of communications services or result in the provision of new or additional services to consumers, as well as any other statutory goals and directives applicable to a particular spectrum band being licensed by competitive bidding.

100. As the Commission noted in the Mobile Spectrum Holdings Report and Order, the mobile wireless marketplace is highly concentrated, and with continually increasing consumer demand for mobile broadband, ''in order for there to be robust competition, multiple competing service providers must have access to or hold sufficient spectrum to be able to enter a marketplace or expand output rapidly in response to any price increase or reduction in quality, or other change that would harm consumer welfare.'' In addition, the Commission has found that holding a mix of spectrum bands is advantageous to providers and that consumers' benefit when multiple providers have access to a mix of spectrum bands. The Commission concludes here that with, the rapid rate of technological advance, mmW spectrum is likely to be a critical component in the development of 5G, and the Commission must take steps to ensure its optimal use to the benefit of all American consumers. For these reasons, the Commission adopted an *ex ante* spectrum aggregation limit of 1250 megahertz that will apply to licensees acquiring spectrum in the 28 GHz, 37 GHz, and/or 39 GHz bands, through competitive bidding in auction. The Commission adopted for these same reasons a spectrum threshold of 1250 megahertz for proposed secondary market transactions in these three bands.[6]

101. Historically, mmW frequencies have been considered unsuitable for

[6] The Commission notes that this 1250 megahertz spectrum threshold helps to identify those markets that provide particular reason for further competitive analysis, but that the Commission's consideration of potential competitive harms would not be limited solely to those markets identified by the threshold.

mobile applications because of propagation losses at such high frequencies and the inability of mmW signals to propagate around obstacles. As noted in the *NPRM,* bands above 24 GHz were not typically considered for stand-alone mobile services but rather as supplementary channels to deliver ultra-high speed data in specific places. Due to technological advances, the mmW bands could potentially be used for mobile broadband and are likely to serve as an important supplement to lower-band spectrum. Specifically, the mmW bands potentially will be used for supporting very high capacity networks in areas that require such capacity, as well as for machine-to-machine communications, and in the development of various Internet of Things (IoT) applications including wearables, fitness and healthcare devices, autonomous driving cars, and home and office automation.

102. The Commission finds that grouping the 28 GHz, 37 GHz, and 39 GHz bands together for purposes of applying these spectrum holdings policies, either at auction or in the secondary market, is appropriate in view of the interchangeability of the spectrum in these bands, *i.e.,* similar technical characteristics and potential uses of this spectrum that are unique to the mmW bands. While certain differences across the mmW bands exist, the Commission finds these technical differences are not sufficient to significantly affect how these spectrum bands might be used and to require separate band-specific limits. This approach mirrors the Commission's existing Commercial Mobile Radio Service (CMRS) spectrum screen, which applies across a number of bands that do not have the same technical characteristics and not on a band-specific basis. Even assuming that more 37 GHz to 39 GHz spectrum would be needed to provide the same performance, there will be 2400 megahertz of 37 GHz and 39 GHz spectrum available for service providers' use, almost three times as much as in the 28 GHz band. And, in any event, all the particular facts of any proposed secondary market transaction will be carefully evaluated on a case-by-case basis to ensure that the public interest is served. For these reasons, the Commission does not find that adopting a band-specific spectrum aggregation limit is necessary, and the Commission finds that the spectrum holdings policies adopted in the *Report and Order* will best support its objective of ensuring that multiple providers have access to this high band spectrum that is likely to be critically important in the development of 5G services moving forward. The Commission anticipates that applying these spectrum holdings policies to spectrum with similar technical characteristics that may become available in the future is also likely to be appropriate.

103. *Competitive Bidding.* The Commission concludes that an approach based on limiting an entity's holding to approximately one-third of the relevant spectrum will help to ensure that multiple providers are able to access a sufficient amount of spectrum to the benefit of consumers. In the Commission's consideration of the appropriate limit to set at auction, the Commission notes that as a result of the various license sizes in these bands, setting a limit at approximately one-third would as a practical matter result in a limit notably lower than a one-third limit.[7] Given the varied license sizes of spectrum blocks in each band, as well as the total amount of mmW spectrum available, the Commission finds that permitting licensees to acquire somewhat more than one-third of the spectrum available in these bands at auction is appropriate. The Commission therefore will not permit licensees to acquire more than 1250 megahertz across the three bands at auction.[8] The Commission finds that the spectrum aggregation limit the Commission adopted will help ensure that multiple providers will be able to access a sufficient amount of mmW spectrum to facilitate the deployment of new services and innovation that will benefit consumers, while guarding against the excessive concentration of licenses. The Commission asks for comment below on how this limit might be implemented.

104. *Secondary Market.* The Commission adopted its proposal to exclude mmW spectrum from the current spectrum screen that includes those spectrum bands that the Commission has determined are suitable and available for the provision of mobile telephony/broadband services. As the Commission has previously explained, spectrum is considered ''available'' if it is ''fairly certain that it will meet the criteria for suitable spectrum in the near term, an assessment that can be made at the time the spectrum is licensed or at later times after changes in technology or regulation that affect the consideration.'' The Commission does not find that the mmW bands are suitable and available for the provision of mobile telephony/broadband services in the same manner as other spectrum bands that are currently included in the Commission's spectrum screen as applied to secondary market transactions. The Commission makes this finding based on the unique characteristics of these bands as described above. Accordingly, the Commission does not include the mmW bands in the spectrum screen.

105. However, the Commission recognizes that this frontier spectrum is likely to become increasingly valuable to the advent of 5G services. In its competitive analysis of wireless transactions, the spectrum screen applicable to lower-band spectrum has been one tool used to help identify particular markets for further competitive analysis; it is applied on a county-by-county basis and identifies local markets where an entity would hold approximately one-third or more of the total spectrum suitable and available for the provision of mobile telephony/broadband services, post-transaction. Similarly, for proposed secondary market transactions that would result in an entity holding 1250 megahertz or more of the total spectrum in the 28 GHz, 37 GHz, and 39 GHz bands, the Commission will apply its threshold on a county-by-county basis, and subject such transactions to the Commission's case-by-case review in order to ensure that the public interest is served. As noted above, while this 1250 megahertz spectrum threshold helps to identify those markets that provide particular reason for further competitive analysis, the Commission's consideration of potential competitive harms will not be limited solely to those markets identified by the threshold. Establishing this spectrum aggregation threshold in the secondary market context recognizes the specific characteristics of the

[7] The total available amount of the mmW spectrum in the 28 GHz, 37 GHz, and 39 GHz bands today is equal to 3250 megahertz, approximately one-third of which is 1100 megahertz. Given the sizes of the spectrum blocks in these bands, however, no entity could hold more than 1050 megahertz, and an entity interested in holding only licenses in the 37 and 39 MHz bands could hold no more than 1000 megahertz. More specifically, the latter entity would be able to hold no more than five licenses of 200 megahertz each across the 37 GHz and 39 GHz bands for a total of 1000 megahertz. An entity interested in holding some 28 GHz spectrum could hold either two 28 GHz licenses and one license of 200 megahertz for a total of 1050 megahertz, or one 425 megahertz license in the 28 GHz band and three licenses of 200 megahertz for a total of 1025 megahertz.

[8] The Commission recognizes that there are incumbent licensees in the 28 GHz and 39 GHz bands that currently hold varying amounts of spectrum. These licensees would be able to bid in the auction to an amount that would be no more than 1250 megahertz in total, taking existing spectrum holdings into account. Service providers' existing spectrum holdings across the 28 GHz, 37 GHz, and 39 GHz bands therefore will be counted for purposes of the Commission's application of the 1250 megahertz limit.

spectrum while helping to ensure that multiple entities have an opportunity to obtain mmW spectrum for deployment of innovative mobile technologies.

106. *Summary.* The Commission finds, on balance, that the potential public interest benefits of adopting a 1250 megahertz limit for auctions of this spectrum, and a 1250 megahertz threshold for secondary market transactions for these unique spectrum bands outweigh any potential public interest harms. Further, adopting these spectrum holdings policies is consistent with the Commission's previous determination that an ''approximately one-third threshold for total spectrum that the Commission uses to identify those holdings in local markets that may raise particular competitive concerns'' is an effective analytical tool in the secondary market context. The Commission anticipates that the potential costs of adopting such spectrum holdings policies will be low. The Commission disagrees with commenters who argue that it is premature for the Commission to establish any spectrum aggregation policies in these bands and that such policies will undermine the potential use of this spectrum. On the contrary, the Commission finds that establishing such policies that will apply as mmW spectrum is introduced into the marketplace will help promote competition from the outset. The Commission has explained that mmW spectrum holds the potential for a range of uses from supporting high capacity networks to use with various IoT applications. While the Commission cannot be certain at this time how this spectrum will be used, the Commission finds that its anticipated value to the future of 5G makes it critical that multiple providers have access to it. The spectrum holdings policies the Commission adopted will guard against consolidation of this spectrum by one or two providers and will encourage the development of innovative services to the benefit of the American consumer.

7. Performance Requirements

a. Performance Metrics and Milestones

107. The Commission declines to adopt a unified performance metric at this time. Based on the criticisms and alternative suggestions in the record, the Commission concludes that such an approach would not provide the flexibility necessary to support innovative uses of the spectrum, as it would favor one deployment approach over another. A unified approach might also deter investment and deployment in these bands. The Commission also declines to adopt a ''substantial service'' standard of performance for the UMFUS. The Commission determines that such a standard, with no firm minimum requirements, would not adequately safeguard effective use of spectrum in these bands. The Commission also declines to adopt a usage-based metric for performance requirements because it is not clear that there is a workable method of measuring or enforcing such a requirement. Instead, the Commission adopted a series of metrics, tailored for each type of service a licensee might choose to offer. Licensees may fulfill their performance requirements by showing that they meet their choice of any one of the below standards, or a combination of several. This framework is intended to provide enough certainty to licensees to encourage investment and deployment in these bands as soon as possible, while retaining enough flexibility to accommodate both traditional services and new or innovative services or deployment patterns. Its increased level of firmness over a substantial service metric is also consistent with the Commission's recent approach in other services.

108. The Commission notes that this list of metrics is not intended to be exhaustive. The Commission recognizes that the metrics the Commission adopted does not cover all possible types of service that licensees may seek to offer in these bands, and that new, innovative services may be developed with different characteristics that the Commission cannot foresee at this time. The Commission therefore seeks further comment in the *FNPRM* on additional metrics that should be applied to these innovative services.

109. The Commission adopted these performance requirements only in relation to the end of the initial license terms in these bands. Because the Commission believes it is taking action with significant lead time before the full development of the technology, the Commission believes an interim benchmark might be difficult to meet and may result in a substantial number of waiver and extension requests. While the Commission does not adopt any ongoing or subsequent performance requirements at this time, the Commission strongly encourages licensees to deploy networks and services in a timely manner consistent with the development of the technology for these bands. The Commission emphasizes, however, that the Renewal and Service Continuity proceeding (WT Docket No. 10–112), which addresses this issue, remains open, and that licensees may be subject to any requirements adopted as part of that proceeding at some later date.

110. *Mobile and point-to-multipoint.* For mobile and point-to-multipoint services in the 28 GHz, 37 GHz (geographic area licenses only), and 39 GHz bands, the Commission adopted a modified version of the Commission's proposal in the *NPRM.* In order to meet the standards for license renewal, a licensee providing mobile service must provide coverage to 40 percent of the population of the license area and must be using the facilities to provide service. This is a lower portion of the population than is the standard for lower frequency bands because this level of coverage strikes the appropriate balance between ensuring sufficient use of the spectrum and allowing licensees flexibility to deploy an emerging technology which may be more suitable for smaller coverage areas. The Commission views the current safe harbor of 20 percent population coverage as inappropriate going forward because the new technologies being developed will dramatically increase the opportunities to use these bands. Since the Commission is not requiring service demonstrations until the end of the license term, the Commission believes licensees will have more than adequate time to meet this benchmark. Similarly, the Commission does not believe CTIA's suggestions of 10 ''connections'' per 10,000 population, or 50 connections per county, will result in robust build out in these bands. Under CTIA's proposed definition of a ''connection,'' these 10 connections could represent as little as one subscriber accessing the network 10 times in one month. This is a particularly low benchmark for mobile operations, which is one of the primary target use cases for this new service. The Commission does not believe this standard represents a sufficient level of service to justify renewal.

111. The Commission declines to adopt the measurement method the Commission proposed in the *NPRM* and concludes that requiring a specific methodology is unnecessary. Instead, the Commission will provide licensees with flexibility in terms of how they make their service showings, but Commission staff will continue to review showings to ensure that they accurately reflect coverage.

112. *Fixed.* The Commission does not adopt its proposed method of ''keyhole contours'' for assigning fixed links a population equivalent. Instead, the Commission adopted a more traditional method of demonstrating fixed service: the number of links per population in the license area. Specifically, the Commission adopted a requirement that

geographic area licensees providing Fixed Service in the 28 GHz, 39 GHz, or 37 GHz bands must construct and operate at least four links in license areas with less than 268,000 population, and at least one link per 67,000 population in license areas with greater population. This standard is similar to the standard the Commission established for fixed point-to-point services in the 2.3 GHz band. While links in mmW bands will presumably be shorter because of the propagation characteristics, the higher frequencies will allow more reuse of spectrum in a given area. These links must be part of a network that is actually providing service, whether to unaffiliated customers or private, internal uses, and all links must be present and operational at the end of the license term. As with the mobile performance milestone, for bands licensed by areas larger than counties the number of links and the size of the population will be calculated over the entire license area, not county by county.

113. *Satellite.* The Commission adopted it proposal from the *NPRM.* A licensee who purchases a 28 GHz UMFUS license may fulfill build-out requirements for the license by deploying an earth station in the license area that is operational and providing service. The Commission notes that a licensee may not fulfill this requirement by leasing a portion of its license area to a satellite operator that builds and operates an earth station within the leased area. In 37 and 39 GHz, because the Commission adopted significantly larger geographic license areas than counties, constructing and operating an earth station will fulfill the performance requirement only for the county in which it is constructed, and not for the entire license area. Satellite operators who develop earth stations under the satellite sharing mechanisms the Commission adopted for the 28 GHz and 39 GHz bands will continue to be subject to the applicable part 25 build-out requirements.

114. *Combination.* Licensees whose deployments contain a mix of services, for example mobile service combined with fixed backhaul may meet the relevant fixed or mobile/point-to-multipoint standard separately. The Commission declines to establish a specific formula for evaluating such buildouts on a combined basis. Instead, the Commission will evaluate such showings on a case-by-case basis, as the Commission has done for LMDS.

b. Failure To Meet Buildout Requirements

115. The Commission adopted a modified version of its proposal, tailored to the different license area sizes the Commission adopted for each band. For all bands, the Commission adopted its proposal to terminate licenses (or portions of licenses, as appropriate) automatically if a licensee fails to meet the applicable performance requirements, which is widely applied in many wireless services. The band-specific approaches to license renewal and termination are explained in more detail below. In the accompanying *FNPRM,* the Commission seeks to further develop the record on use-or-share obligations.

116. *28 GHz.* The 28 GHz band will be licensed by county because partitioning licenses in these bands into license areas smaller than counties would be administratively burdensome without providing any off-setting benefits to licensees or service providers. Accordingly, if a licensee in the 28 GHz band fails to meet the applicable performance requirements at the end of its license term, the license for that county will terminate immediately in its entirety. As the Commission is reissuing the licenses in these band by county rather than by BTA, the Commission declines to implement EchoStar's proposal to continue to evaluate incumbent licensees' performance on a BTA-wide basis.

117. *37 and 39 GHz.* The 39 GHz band, as well as the 37.6–38.6 GHz band, will be licensed by PEAs, rather than counties. In order to balance the need to ensure productive use of spectrum with the need to encourage investment and deployment, the Commission adopted a modified approach to performance requirements in this band.

118. A licensee who meets the applicable performance requirements for the entire PEA, taken as a whole, will be eligible to renew the entire license. A licensee who does not meet the requirements for the entire license area will have two options: (1) automatic termination of the entire license, or (2) partition the license at the county level, and return a portion of the license to the Commission such that the applicable performance requirements are met for the remaining non-forfeited area. For example, a licensee of a PEA containing five counties of 100,000 people each, who deployed mobile service covering 60 percent of the population in each of two counties, and made no deployments in the other three counties, would be covering only 24 percent of the total population of the license area. This would not be enough to meet performance requirements across the entire license. However, the licensee could forfeit the portion of the license covering the three un-deployed counties, and retain and renew the portion of the license covering the remaining two counties. Similarly, a licensee of the same hypothetical PEA who deployed mobile service covering 80 percent of one county, and 30 percent of another, could retain and renew the portion of the license for those two counties because the resulting two-county license area would have coverage of 55 percent of its population, which exceeds the 40 percent requirement.

c. Treatment of Incumbents

119. The Commission declines to adopt its proposal from the *NPRM.* For license terms concluding before 2020, licensees may be unable as a practical matter to meet the new, more rigorous requirements the Commission adopted for these bands at the end of their current license terms because of the nascent state of technology. Moreover, providing for additional time will provide more effective opportunities for licensees to use the spectrum in ways that maximize the flexibility now afforded by the Commission's new rules. For example, the transition toward providing innovative mobile services is likely to require complex business decisions and changes in plans. In short, it is the Commission's intent to encourage deployment of new and innovative services—particularly mobile service—as efficiently and effectively as possible.

120. Thus, the Commission slightly modifies and extends the deadline for meeting the performance requirements pertaining to licensees' current licenses for licenses expiring after the adoption date of the rules in this proceeding. Specifically, current licensees in the 28 GHz and 39 GHz bands who, under the current rules, face a deadline for demonstrating substantial service after the adoption date of this *Report and Order* will not be required to demonstrate substantial service at renewal. Instead, those licensees will be required to fulfill the performance requirements the Commission adopted for their respective licenses by June 1, 2024. This approach will allow current licensees to focus on growing and transitioning their networks in line with new and developing industry standards, which will support earlier and more robust deployment of next-generation services in these bands.

d. Alternatives to Performance Requirements

121. The Commission declines to adopt either of these alternatives for these bands. The Communications Act contemplates that the Commission will take measures ''to prevent stockpiling or warehousing of spectrum by licensees.'' The Commission believes the foregoing performance requirements are feasible in these bands, and the best method to prevent warehousing in this context. O3b argues that such ''consecutive license terms with recurring payments'' would simply change the financial calculation underpinning warehousing: while the initial bid would be smaller and discounted less, the lower price of entry could encourage warehousing by reducing the amount initially needed to hold on to the spectrum. In the absence of any discussion of the ''option payment'' concept, the Commission will not adopt the proposal at this time.

8. Permanent Discontinuance of Operations

122. Under § 1.955(a)(3) of the Commission's rules, an authorization will automatically terminate, without specific Commission action, if service is ''permanently discontinued.'' In the *NPRM,* the Commission proposed that for UMFUS licensees that identify their regulatory status as common carrier or non-common carrier, ''permanently discontinued'' should be defined as a period of 180 consecutive days during which the licensee does not provide service to at least one subscriber that is not affiliated with, controlled by, or related to, the provider in the service area of its license (or smaller service area in the case of a partitioned license).

123. The Commission proposed a different approach for licensees that use their licenses for private, internal communications. For these services, the Commission proposes to define ''permanent discontinuance'' as a period of 180 consecutive days during which the licensee does not operate any facilities under the license. The Commission proposed that licensees not be subject to this requirement until one year after their initial license period ends, to allow them adequate time to construct their networks.

124. The Commission also proposed that when 28 GHz, 37 GHz, or 39 GHz licensees permanently discontinue service, the licensee must notify the Commission of the discontinuance within 10 days, by filing FCC Form 601 and requesting license cancellation. The Commission further proposed that an authorization automatically terminates without specific Commission action if service is permanently discontinued, even if a licensee fails to file the required form. No commenters discuss the permanent discontinuance of service proposals.

125. The Commission adopted its proposals from the *NPRM* related to permanent discontinuance of operations. Specifically, the Commission adopted the two separate proposed definitions of ''permanent discontinuance,'' for common carrier and non-common carrier service, and for private communications services. The Commission also adopted its proposal to wait to implement this requirement until one year after the initial license period ends. This approach is consistent with the definitions the Commission has adopted for other spectrum bands that are licensed for mobile use, including the H Block, AWS–3, and AWS–4 bands.

126. The Commission also adopted its proposal that a licensee who permanently discontinues service must notify the Commission within 10 days, and the Commission's proposal that such licenses terminate automatically even if a licensee fails to appropriately notify the Commission. This approach to permanent discontinuance is consistent with § 1.955(a)(3) of the Commission's rules. The permanent discontinuance rule is intended to provide operational flexibility while ensuring that spectrum does not lie idle for extended periods, and the rules the Commission adopted support those goals.

9. Secondary Markets Policies

a. Partitioning and Disaggregation

127. The Commission's part 101 rules generally allow for geographic partitioning and spectrum disaggregation in the LMDS and 39 GHz service. Geographic partitioning refers to the assignment of geographic portions of a license to another licensee along geopolitical or other boundaries. Spectrum disaggregation refers to the assignment of discrete amounts of spectrum under the license to another entity. Disaggregation allows for multiple transmitters in the same geographic area operated by different companies on adjacent frequencies in the same band.

128. In 1997, the Commission determined that all LMDS licensees would generally be permitted to disaggregate and partition their licenses. The Commission later adopted specific procedural, administrative, and operational rules to govern the disaggregation and partitioning of LMDS licenses. Similarly, in the same year, the Commission concluded that partitioning and disaggregation would be permitted in the 39 GHz band and adopted partitioning and disaggregation rules in this band as well. The rules require the spectrum to be disaggregated by FDD pair in the 39 GHz band.

129. In the *NPRM,* the Commission proposed to continue to allow partitioning and disaggregation in the 28 and 39 GHz bands, and to permit 37 GHz licensees to partition and disaggregate their licenses as well. The Commission also proposed to require all parties to a partitioning or disaggregation agreement to independently fulfill the applicable performance and renewal requirements, which is consistent with the current requirements.

130. Commenters overwhelmingly support allowing secondary market transactions in general, and partitioning and disaggregation in particular. Intel supports expanding disaggregation in the 39 GHz band by also permitting pair-splitting. No commenters oppose allowing secondary market transactions generally, or partitioning or disaggregation specifically. No commenters discuss performance requirements for parties to a partition or disaggregation.

131. The Commission adopted its proposal in the *NPRM* to allow partitioning and disaggregation of licenses in the 28, 37, and 39 GHz bands. As the Commission noted when first establishing partitioning and disaggregation rules, allowing such flexibility could facilitate the efficient use of spectrum by enabling licensees to make offerings directly responsive to market demands for particular types of services, increasing competition by allowing new entrants to enter markets, and expediting provision of services that might not otherwise be provided in the near term. This policy would leave the decision of determining the correct size of licenses to the licensees and the marketplace. Allowing this flexibility is consistent with the record, and with the flexible approach to licensing these bands that the Commission adopted in this *Report and Order.* Because the band plan the Commission adopted for the 39 GHz band does not use paired spectrum blocks, the current rule that licenses in that band must be disaggregated in pairs will no longer apply.

132. The Commission also adopted its proposal to require all parties to a partitioning or disaggregation agreement to independently fulfill applicable performance and renewal requirements. According to the performance requirements framework the Commission adopted, individual

licensees may choose which metric they fulfill (*e.g.,* fixed, mobile, or satellite), but each licensee must make a showing that independently satisfies the requirements. This requirement will facilitate efficient spectrum use, while enabling service providers to configure geographic area licenses and spectrum blocks to meet their operational needs.

b. Spectrum Leasing

133. In 2003, in order to promote more efficient use of terrestrial wireless spectrum through secondary market transactions and in order to eliminate regulatory uncertainty, the Commission adopted the *Secondary Markets First Report and Order,* which contained a comprehensive set of policies and rules to govern spectrum leasing arrangements between terrestrial licensees and spectrum lessees. These policies and rules enabled terrestrially-based Wireless Radio Service licensees holding ''exclusive use'' spectrum rights to lease some or all of the spectrum usage rights associated with their licenses to third party spectrum lessees. Those third party lessees were then permitted to provide wireless services consistent with the underlying license authorization.

134. This 2003 Order excluded a number of wireless radio services from the spectrum leasing rules and policies, including part 101 services. A year later, the Commission extended the spectrum leasing policies to a number of additional wireless services, including part 101 services. At that time, the Commission also built upon the spectrum leasing framework by establishing immediate approval procedures for certain categories of terrestrial spectrum leasing arrangements.

135. In the *NPRM,* the Commission proposed to apply these spectrum leasing policies to the new part 30 radio service governing UMFUS's, including all 28 GHz, 37 GHz, and 39 GHz terrestrial licenses. The Commission proposed to apply these policies in the same manner that they apply to part 101 services.

136. Many commenters support allowing secondary market transactions generally and spectrum leasing specifically. Commenters cite the additional flexibility afforded by leasing spectrum, and the market certainty granted by using established rules. Several commenters also mention that spectrum leasing allows a broader range of entities to access licensed spectrum and provides additional competition in the marketplace. No commenters oppose allowing spectrum leasing arrangements.

137. The Commission adopted its proposal to allow spectrum leasing in the 28 and 39 GHz bands, as well as the portion of the 37 GHz band licensed on a geographic area basis. Allowing spectrum leasing in these bands will promote more efficient, innovative, and dynamic use of the spectrum, expand the scope of available wireless services and devices, enhance economic opportunities for accessing spectrum, and promote competition among providers. In addition, spectrum leasing policies in a particular band generally follow the same approach as the partitioning and disaggregation policies for that band. Thus, the Commission's adoption of spectrum leasing rules for the 28 GHz, 39 GHz, and 37 GHz bands is consistent with the Commission's decision above to allow partitioning and disaggregation in these bands as well.

10. Other Operating Requirements

138. The Commission adopted its proposal in the *NPRM* to require UMFUS licensees to comply with other rule parts that pertain generally to wireless communications services, and with any applicable service-specific rules. This approach will maintain general consistency among various wireless communications services. Consistent with the Commission's proposal, the Commission will add UMFUS to the definitions of Wireless Radio Service and Wireless Telecommunications Service in § 1.907 of the Commission's rules. The Commission refrains from modifying other existing rules in other rule parts at this time, as no commenter has identified any incompatibilities or inconsistencies between the UMFUS Service and the existing service-specific or generally applicable rules. To consolidate the technical rules for all of the types of flexible uses that might be deployed by UMFUS licensees under a single rule part, and to maintain consistency between the rules that the Commission adopted and the current technical requirements that existing LMDS and 39 GHz licensees are subject to, the Commission will move the existing part 101 technical rules for traditional point-to-point and point-to-multipoint operations into part 30.

11. Competitive Bidding Procedures

a. Applicability of Part 1 Competitive Bidding Rules

139. The Commission proposed in the *NPRM* to conduct any spectrum auction of UMFUS licenses in conformity with the general competitive bidding procedures set forth in part 1 subpart Q of the Commission's rules. No commenters proposed any alternative or objected. Given the Commission's experience in successfully conducting auctions using these procedures, the Commission adopted its proposed approach. The Commission will employ the part 1 rules governing competitive bidding design, designated entity preferences, unjust enrichment, application and payment procedures, reporting requirements and the prohibition on certain communications between auction applicants—including those updates made in the *Competitive Bidding Update Report and Order.* The Commission notes however, that the Commission could modify these procedures at a later time.

140. In discussing the competitive bidding rules, one commenter urges that if the Commission adopts county-level licenses, it would be critical to permit 'package bidding' so that operators could assemble larger footprints by bidding on multiple counties at one time. In response, two commenters argue that the Commission should not permit any form of package bidding because such bidding procedures may make it more difficult for small bidders to acquire specific licenses that are included in larger packages. Issues involving such bidding procedures are more appropriately addressed in a pre-auction proceeding that will seek public input on the competitive bidding procedures to be used for a particular auction of UMFUS licenses. Accordingly, the Commissions defer consideration of such matters to such proceeding(s) where interested parties are likely to have a more informed context for such input.

b. Small Business Provisions for Geographic Area Licenses

141. In authorizing the Commission to use competitive bidding, Congress mandated that the Commission ''ensure that small businesses, rural telephone companies, and businesses owned by members of minority groups and women are given the opportunity to participate in the provision of spectrum-based services.'' One of the principal means by which the Commission fulfills this mandate is through the award of bidding credits to small businesses. In the *Competitive Bidding Second Memorandum Opinion and Order,* the Commission stated that it would define eligibility requirements for small businesses on a service-specific basis, taking into account the capital requirements and other characteristics of each particular service in establishing the appropriate threshold. Further, in the *Part 1 Third Report and Order* and the more recent *Competitive Bidding*

Update Report and Order, the Commission, while standardizing many auction rules, determined that it would continue a service-by-service approach to defining small businesses. The Commission recently updated its standardized schedule of small business definitions to reflect the capital challenges small businesses face in the current wireless industry, and in the *NPRM* the Commission sought comment on whether to apply those updated definitions for auctions of spectrum in the UMFUS bands.[9]

142. Based on the Commission's prior experience with the use of bidding credits in spectrum auctions, the Commission believes that the using bidding credits is an effective tool to achieve the statutory objective of promoting participation of designated entities in the provision of spectrum-based service.

143. In adopting competitive bidding rules for the 39 GHz band, the Commission included provisions for designated entities to promote opportunities for small businesses, rural telephone companies, and businesses owned by members of minority groups and women to participate in the provision of spectrum-based services. Specifically, the Commission adopted bidding credits for applicants qualifying as small businesses. For auction of licenses in the 39 GHz band, the Commission adopted two small business definitions. These two small business definitions were later adopted as the highest two of three thresholds in the Commission's standardized schedule of bidding credits. In the *NPRM,* the Commission proposed to adopt for the UMFUS the two small business definitions with higher gross revenues thresholds reflecting the recently adopted updates to the part 1 schedule of small business definitions in the *Competitive Bidding Update Report and Order.* The Commission adopted its proposal to apply the two small business definitions with higher gross revenues thresholds to auctions of UMFUS licenses in the 28, 37, and 39 GHz bands and any other spectrum bands that the Commission may subsequently designate for inclusion in the UMFUS. Accordingly, an entity with average annual gross revenues for the preceding three years not exceeding $55 million will qualify as a ''small business,'' while an entity with average annual gross revenues for the preceding three years not exceeding $20 million will qualify as a ''very small business.'' While the capital requirements of the services to be deployed in these bands is not yet known, the Commission believes that using these gross revenue thresholds will enhance the ability of small businesses to acquire and retain capital and thereby complete meaningfully at auction. The Commission also believes that these thresholds are not overly inclusive, and prevents designated entity benefits from flowing to entities for which such credits are not necessary. The Commission believes that the various spectrum bands included in the UMFUS—spectrum that will be utilized under the same or similar technical rules—will be deployed for the same types of service, and therefore the two small business definitions with higher gross revenues thresholds should apply to all of the bands in the UMFUS.

144. The Commission also adopted its proposal to provide qualifying ''small businesses'' with a bidding credit of 15 percent and qualifying ''very small businesses'' with a bidding credit of 25 percent, consistent with the standardized schedule in part 1 of the Commission's rules. This proposal was modeled on the small business size standards and associated bidding credits that the Commission adopted for a range of other services, including Advanced Wireless Services in the AWS–1 band. The Commission believes that this two-tiered approach has been successful in the past, and will once again utilize it. The Commission uses the existing 39 GHz service rules as a starting point, but adjusts the bidding credit levels to be consistent with the schedule in part 1 of the Commission's rules. The Commission believes that use of the small business definitions and associated bidding credits set forth in the part 1 bidding credit schedule will provide consistency and predictability for small businesses. No commenter provides any alternative or reason why the Commission's bidding credit thresholds or small business definitions would not work in this service. Accordingly the Commission adopted its proposals regarding small business definitions and bidding credits.

c. Rural Service Provider Provisions for Geographic Area Licenses

145. The rural service provider bidding credit awards a 15 percent bidding credit to those servicing predominantly rural areas and that have fewer than 250,000 combined wireless, wireline, broadband and cable subscribers. In the *NPRM,* the Commission stated that in the absence of comments to the contrary, the Commission would leave open the option for future bidding applicants to apply for rural service provider bidding credits in lieu of a small business bidding credits. The Commission now decides that the Commission will apply the rural service provider bidding credit to auctioning the 28 GHz, 37 GHz and 39 GHz bands. Although the Commission has not received comments about this issue, the Commission believes that a targeted bidding credit will better enable rural service providers to compete for spectrum licenses at auction and in doing so, will increase the availability of 5G service in rural areas.

d. Small Business and Rural Service Provider Bidding Credit Caps

146. In the *Competitive Bidding Update Report and Order,* the Commission adopted a process for establishing a reasonable monetary limit or cap on the amount of bidding credits that an eligible small business or rural service provider may be awarded in any particular auction. The Commission established the parameters to implement a bidding credit cap for future auctions on an auction-by-auction basis. Consistent with the Commission's longstanding approach, after adoption of all of the necessary service rules for the UMFUS, the Commission will initiate a public notice process to solicit public input on certain details of auction design and the auction procedures for the initial auction of UMFUS licenses. As part of that process, the Commission will solicit public input on the appropriate amount of the bidding credit cap and subsequently establish the cap that will apply for that auction, based on an evaluation of the expected capital requirements presented by the particular spectrum being auctioned and the inventory of licenses to be auctioned.

e. Tribal Lands Bidding Credit

147. The tribal lands bidding credit program awards a discount to a winning bidder for serving qualifying tribal land that have a wireline telephone

[9] Under the new standardized schedule, businesses with average annual gross revenues for the preceding three years not exceeding $4 million would be eligible for a 35 percent bidding credit, businesses with average annual gross revenues for the preceding three years not exceeding $20 million would be eligible for a 25 percent bidding credit, and businesses with average annual gross revenues for the preceding three years not exceeding $55 million would be eligible for a 15 percent bidding credit. The Commission also adopted a monetary cap on the total amount of bidding credits that an eligible small business or rural service provider may be awarded in any particular auction. Specifically, the amount of the bidding credit cap for a small business in any particular auction will not be less than $25 million and the bidding credit cap for the total amount of bidding credits that a rural service provider may be awarded will not be less than $10 million.

subscription rate equal to or less than 85 percent of the population. The Commission believes that tribal entities involved in the telecommunications industry face unique challenges in participating in spectrum auctions and that the tribal lands bidding credit will promote further deployment and use of spectrum over tribal lands. No commenters oppose the tribal land bidding credit nor suggest that the tribal lands bidding credit is unnecessary. Accordingly, a winning bidder for a market will be eligible to receive a credit for serving qualifying Tribal lands within that market, provided it complies with the applicable competitive bidding rules.

f. Bidding Process Options

148. Finally, the Commission also sought comment in the *NPRM* on whether the Commission should revise any of the Commission's bidding process and payment rules to ameliorate the administrative difficulties the Commission could potentially face in enforcing the construction requirements in the 3,143 counties nationwide. One alternative the Commission discussed was to allow prospective millimeter wave licensees to bid, in a single auction, on licenses that have consecutive terms of license rights in a given geographic area—*i.e.,* licensees could bid at auction for the right to obtain a license in a given county not just for a single license term, but for each subsequent five-year license term; and the winning bidder would pay an auction-determined fee, in lieu of other performance requirements before the start of each term. Once a winning bidder made this payment, a new license would issue for the next consecutive license term. Some commenters support adopting such payments in lieu of performance requirements. However several commenters criticize the approach as incentivizing spectrum warehousing. For example, O3b notes that consecutive license terms with recurring payments would simply change the financial calculation underpinning warehousing: while the initial bid would be smaller and discounted less, the lower price of entry could encourage warehousing by reducing the amount initially needed to hold on to the spectrum. The Commission declines to adopt recurring payments as an alternative to performance requirements in this order and note it is unlikely the Commission would adopt such payments given the Commission's review of the record and further consideration of the factors affecting these bands. In the *NPRM,* the Commission speculated that these payments could incentivize deployment of network facilities and discourage spectrum warehousing because a licensee would be unlikely to pay the auction price for successive terms for spectrum it did not intend to use. However, the Commission believes there is a strong likelihood that bidders would still warehouse spectrum and leave it fallow if the cost of the recurring payment to the spectrum holder was outweighed by the benefit derived from foreclosing other operators' access to the spectrum. This would counter the Commission's goal of accelerating deployment in these bands. Accordingly the Commission declines to adopt this proposal.

12. Security

149. The FCC's approach to cybersecurity proceeds from the view that communications providers are generally in the best position to evaluate and address risks to their network operations. This approach recognizes the importance of private sector leadership and innovation in cybersecurity, and it reduces the need for ongoing regulatory involvement in private sector security practices. It will prove successful, though, only if the private sector aggressively addresses evolving threats through security-by-design, even where short-term market incentives may not be sufficient to drive long-term security investments before harm is realized.

150. Emerging security standards for new flexible uses of the mmW bands (and ''5G'' more broadly) are developing in parallel, but not necessarily at the same pace, with the emerging networks, devices, and equipment. While CTIA has observed that significant, multi-stakeholder, multi-disciplinary, and ''multi-layered'' efforts are ongoing, domestically and globally, ''to assure that [5G] network and [mmW] device security is preserved to the maximum extent feasible,'' the Commission must acknowledge that to date many wireless communications systems have not been successful at implementing security-by-design. The Commission recognize that, in the race to market, vital security protections too often fall by the wayside.

151. The Commission took narrowly tailored steps to help promote an environment that encourages the early and ongoing consideration of security issues by all private sector participants, including infrastructure and device firms, established communications firms, and new entrants to communications markets. New mmW-based networks will enable valuable new services, and accelerating the deployment of those services is a national priority. Those benefits, however, will be undermined if security risks are not managed by licensees. Accordingly, the Commission is moving expeditiously both to meet the need for new mmW spectrum for next generation services and to help ensure that security for these services is built in from the beginning, not left as an afterthought. In this approach, the Commission concurs with stakeholders who identify that there is an opportunity to take action now—before the technology is mature or the services deployed—to encourage, from the outset, the development of necessary cybersecurity protections alongside the development of emerging services and technologies.

152. In the *NPRM,* the Commission recognized the significance of security to 5G networks and the future devices enabled by and connecting to them. Because of the implications related to both sets of issues, the Commission sought comment on how to secure mmW band devices, networks, and their communications, and specifically on ''how to ensure that effective security features are built into key design principles for all mmW band communications devices and networks.'' The Commission expressed a belief in the value of ''security-by-design'' that is motivated by the Commission's expectations that these networks may provide capabilities for a wide variety of new devices and applications, including, among others, traditional mobile communications capabilities, IoT and other applications as well as devices critical to public safety and related services that provide essential protections to the nation. The Commission indicated that security by design means ensuring that the goals that drive the development of networks and devices include achieving an objective state of security. In that context, the Commission explained that the security constructs of confidentiality, integrity, and availability help us gain insight into security generally, and that security-by-design can help ensure that the next generation of wireless networks meets these critical components of a secure network. Several commenters expressed their support for this approach.

153. The Commission continues to believe in the significant benefits of security by design, including the benefits that the Commission would expect to flow from using the confidentiality, integrity, and availability construct for assessing, planning and incorporating security elements into networks and devices as early as possible in their developmental

stages. Indeed, the record demonstrates that security elements are appropriate and important for service providers and equipment developers to consider now, during the development process, as well as part of an ongoing discussion as networks and devices are deployed and operated.

154. For example, one commenter notes that the ''network-based hop-to-hop security approach used to secure the path between communications users will not be sufficient for differentiated end-to-end security for certain 5G services.'' Systems are in need of a ''secure architecture, stringent identity management and data protection, more rigorous authentication methods, and an array of system-level protections to defend against distributed denial of service . . . attacks and other intrusions.'' Accordingly, the commenter believes that security features that are incorporated into 5G systems by design would provide a significant advantage over any ''built on top of'' system design. Since the service and network architecture of 5G is going through dramatic remodeling, the commenter maintains it will ''improve the feature and competitive strength for 5G if security protection is included at an early stage.''

155. The view that security should be a fundamental component in the design of any new network architecture and protocols is also shared by 5G Americas, which underscores the heightened sense that security is expected to take on as new technology and services are deployed. For example, 5G Americas states that 5G systems are expected to provide important applications such as ''smart grids, telemedicine, industrial control, public safety and automotive, [which] have security requirements to defend against intrusion and to ensure uninterrupted operations.'' Other commenters offer additional examples illustrating why it is appropriate and important to build security elements into considerations that go into developing networks and devices. For instance, AT&T notes a variety of developments that will have security implications: ''machine to machine communications will contemplate energy optimization, reduced signaling, and massive connectivity. With these advancements, IoT [Internet of Things] will become a reality. 5G systems will be capable of supporting a range of machine-to-machine services, from connected cars to smart cities to telemedicine and beyond.'' Highly secure 5G systems will be expected even in times of stress. As FiberTower notes, ''reliance on 5G will only increase in the event of a man-made or naturally occurring outage in a critical service.'' To support these needs, the Commission believes 5G services will need to be highly secure prior to deployment, and the Commission thinks it reasonable that the Commission be apprised of security plans in place prior to 5G services becoming operational.

156. Based on the Commission's analysis of the record, the Commission can best facilitate adoption of security-by-design approaches by promoting an open dialogue about security practices that would be consistent with a discussion at a standards organization. Therefore, the Commission is asking to receive from licensees—before they begin operations—general statements, at a level consistent with the open forum standards body discussions, of their plans for safeguarding their networks and devices from security breaches. Requiring licensees to submit that information at that juncture creates an incentive for them to engage in the development of security measures at an earlier stage. The specific information that the Commission receives will also facilitate the Commission's ability to help in identifying security risks, including areas where more attention to security may be needed, and in disseminating information about successful practices for addressing the risks. Moreover, this approach avoids the drawbacks of imposing prescriptive security mandates—*e.g.,* downsides such as the likelihood that one size will not fit all, the lack of agility in responding to changing circumstances and technologies, and the rigidity that such mandates tend to introduce into systems at the outset—thereby preserving for operators, equipment developers, and other interested parties significant flexibilities for addressing security concerns.

157. As described in detail below, the provision that the Commission adopted promotes ''security-by-design'' approaches within the mmW network and product development environment, in ways that should (i) minimally impact (but appropriately enhance the prospects for security ''assurance'') ongoing design and development with respect to this nascent technology, (ii) facilitate integration of network and product development with the timeline for standards development, and (iii) encourage early participation in and monitoring of such standards development. This provision—a requirement that each licensee discuss at a high level how confidentiality, integrity, and availability principles are reflected in its network security design planning in a Statement submitted to the Commission prior to commencing operations—should also help inform the Commission's collective understanding and strategies for addressing security issues in the next generation of communications networks. More specifically, the Commission is requiring licensees to file a Statement with the Commission within three years after grant of the license, but no later than six months prior to deployment. This time period accords with the Commission's security-by-design goals while leaving flexibility for licensees depending on when they are able to deploy service. The Statement must be signed by a senior executive within the licensee's organization with personal knowledge of the organization's security plans and practices, within the licensee's organization, and must include, at a minimum, the following elements:

- A high-level, general description of the licensee's security approach designed to safeguard the planned network's confidentiality, integrity, and availability with respect to communications from: a device to the licensee's network; one element of the licensee's network to another element on the licensee's network; the licensee's network to another network; and device to device (with respect to telephone voice and messaging services).
- A high-level, general description of the licensee's anticipated approach to assessing and mitigating cyber risk induced by the presence of multiple participants in the band. This should include the high level approach taken toward ensuring consumer network confidentiality, integrity, and availability security principles, which are to be protected in each of the following use cases: communications between a wireless device and the licensee's network; communications within and between each licensee's network; communications between mobile devices that are under end-to-end control of the licensee; and communications between mobile devices that are not under the end-to-end control of the licensee.
- A high-level description of cybersecurity standards and practices to be employed, whether industry-recognized or related to some other identifiable approach;
- A description of the extent to which the licensee participates in standards bodies or industry-led organizations pursuing the development or maintenance of emerging security standards and/or best practices;
- The high-level identification of any other approaches to security, unique to the services and devices the licensee intends to offer and deploy; and

• Plans to incorporate relevant outputs from Information Sharing and Analysis Organizations (ISAOs) as elements of the licensee's security architecture. Plans should include comment on machine-to-machine threat information sharing, and any use of anticipated standards for ISAO-based information sharing.

158. The intent of the disclosures is to facilitate multi-stakeholder peer review and earlier development of devices and a commercially viable market for the service. The Commission recognizes that the Statements concern the cybersecurity of the Commission's nation's critical communications infrastructure and, accordingly, the content of the Statements should be at a high-level and not include information that, if publicly disclosed, would create a significant risk to the security of this infrastructure or related systems and networks. The Commission also recognizes that an entity's cybersecurity posture can be a competitive differentiator and that unauthorized disclosures of Statements containing more detailed information could result in competitive harm to the licensee. Here again, the Commission concludes that the Statements should not provide information at a level of granularity that its public disclosure would jeopardize the competitive position of the licensee. For example, the Commission expects that these disclosures will contain information that could be disclosed at a standards meeting where stakeholders gather to share ideas and information for the purpose of advancing the state of the art. If, however, licensees intend to submit information that warrant confidential treatment, they may seek confidential treatment pursuant to the Commission's rules. Furthermore, the information required to be submitted under this rule as it relates to security plans and practices will not be used for the purpose of enforcing compliance with the Communications Act or any of the Commission's rules, other than the requirement of filing such Statements.

159. The Commission finds that appropriate cybersecurity safeguards are a fundamental part of the development and deployment of mmW systems and services contemplated by this *Report and Order*. The reporting requirement the Commission adopted will not only help ensure that industry focuses the necessary degree of attention throughout these development and deployment processes on the most effective ways to include these safeguards at the earlier possible points, but it will also keep the Commission informed of the ongoing progress in this area so the Commission can provide timely, measured and effective responses to address any emerging problems before they become intractable. It will also be important to consider how best to ensure that the types of cyber safeguards that the Commission encourages for the mmW bands will be incorporated more broadly into future so called 5G networks and services. Consequently, the Commission directs the OET, the Public Safety and Homeland Security Bureau (PSHSB), and the WTB to, by not later than October 31, 2016, issue in a separate docket a *Notice of Inquiry (NOI)* exploring the security implications and solutions in future 5G networks, beyond the actions the Commission took in this *Report and Order.* The Commission believes this *NOI* is an opportunity to look holistically at the potential security implications in future 5G networks offering different types of services to different types of users (*e.g.,* wireless broadband, low-data-rate IoT applications, high-data-rate IoT applications). It will also provide a collaborative vehicle for exploring 5G security-related threats, solutions, and best practices in order to address the implications more effectively. The *NOI* is not intended to duplicate or replace ongoing or future 5G security architecture and 5G design work by standards bodies, industry or academic groups, but instead to facilitate common appreciation across the 5G ecosystem for the evolving security standards. The *NOI* will also provide an opportunity for stakeholders to identify new 5G issues as new IoT functions are developed in 5G, and as national security, public safety, critical infrastructure industries, and consumers begin to understand the implications and potential opportunities of 5G.

G. Technical Rules

1. Flexible Duplexing Rules

160. Consistent with the Commission's proposal in the *NPRM,* the Commission adopted flexible duplexing rules for the 27.5–28.35 GHz, 37–38.6 GHz, and 38.6–40 GHz bands. While the comments indicate that TDD is the duplexing scheme licensees are most likely to deploy in the bands, the Commission sees no reason to prevent them from using other technologies. Therefore, the rules the Commission adopted will allow any type of duplexing to be deployed, subject to other technical rules to manage interference. The Commission also adopted changes to the 39 GHz channel plan, as discussed in more detail in Section I.B.5 (39 GHz Band (38.6–40 GHz)), which will accommodate more flexible duplexing schemes.

2. Transmission Power Limits and Antenna Height

a. Base Stations

161. The Commission believes that an increase in the maximum base station power from what the *NPRM* proposed is necessary for two reasons. First, the 62 dBm/100 MHz EIRP power limit proposed in the *NPRM* will limit UMFUS base stations to a much lower power density than is permitted for other mobile services. For example, Personal Communications Service (PCS) and AWS base stations are permitted to transmit at 62 dBm/MHz EIRP, which would permit a total EIRP of 82 dBm for a 100 MHz signal. The Commission sees no reason why UMFUS should be limited to a lower power density than PCS and AWS. Second, the propagation properties in the mmW band make higher powers necessary. Signal attenuation with distance is higher in the mmW bands than at lower frequencies and signals are more severely attenuated due to obstacles such as foliage and walls. As the simulations submitted by commenters illustrate, higher signal powers are necessary to permit relatively modest base station coverage areas and to increase data throughput. Unnecessarily limiting the base station power in the mmW bands by applying the existing part 27 base station limit could unduly inhibit future technologies and applications.

162. The Commission adopted a base station power limit of 75 dBm/100 MHz EIRP as the base station power limit for the 28 GHz, the 37 GHz and 39 GHz bands. For channel bandwidths less than 100 megahertz the permitted EIRP will be reduced below 75 dBm proportionally and linearly based on the bandwidth relative to 100 megahertz. Because the technology for providing mobile services in these bands is still being developed, the appropriate transmitted power requirements for this equipment cannot be definitively known at this time. This 75 dBm/100 MHz limit represents a consensus that has been endorsed by the commenters who have expressed an intention to manufacture UMFUS equipment. Therefore, the Commission is confident that this power level will provide the equipment manufacturers and future licensees with the flexibility needed to deploy service in these bands. Because of the early stage of development of UMFUS technology, the Commission will monitor how this technology develops and revisit the base station

power limit in the future if it becomes necessary.

163. The Commission is not persuaded by those commenters who do not favor increasing the base stations power limit above the level proposed in the *NPRM.* Boeing's claim that the 75 dBm limit is inconsistent with the operational range of 5G applications is contradicted by the simulation results that show the benefits of increasing the maximum power beyond 62 dBm and the consensus among equipment manufacturers that 75 dBm is a reasonable power limit for UMFUS base stations. Furthermore, the Commission's rules for the 37.5–40.0 GHz band, about which Boeing expresses sharing concerns, limit the FSS to gateway-type earth station operations and prohibit the ubiquitous deployment of satellite earth stations designed to serve individual consumers. The Commission does not believe that the higher power limit the Commission is adopting will significantly affect the limited gateway FSS operations permitted in the band because the Commission is providing a means for gateway earth stations in the band to obtain protection from terrestrial transmissions. As for SES Americom's and Avanti's concerns, the Commission explained in Section I.G.2.d. (Terrestrial Aggregate Interference Concerns to FSS Satellite Receivers in 28 GHz), that the Commission does not believe the Commission needs to take specific action with respect to aggregate interference to satellite receivers in the 28 GHz band at this time. The Commission therefore will not unduly restrict the development of UMFUS by limiting the base station transmit power.

164. The Commission will not adopt a different power limit for equipment that is used to provide both mobile services and backhaul. As the *NPRM* noted, several commenters to the *NOI* suggested that it might be feasible to deploy such 5G equipment. The Commission notes that those commenters did not address this subject in response to the *NPRM* and no other commenters specifically request higher power limits for such equipment. The Commission believes that by adopting a higher power limit for base stations than proposed in the *NPRM,* the Commission is also providing adequate power to ensure successful deployment for combined access/backhaul equipment. In addition, the Commission will not limit base station antenna height at this time because no commenters address the issue. Instead, the Commission shall seek further comment on this topic in the *FNPRM.*

165. Compliance with the transmit power limit shall be ascertained with over the air measurement of EIRP of the device under test (DUT). As Qualcomm has stated, mmW devices are being designed with an array of multiple antennas employing dynamic beamforming and that these designs make verification of transmitter power, EIRP, and antenna gain challenging. In this early stage of mmW development, compliance testing will be challenging because of lack of test equipment and/or facilities that can accurately measure over the air EIRP of the DUT and the need to account for the introduction of antenna arrays and beamforming. Even so, OET has issued a number of Knowledge Database (KDB) publications that delineate measurement procedures for testing of antenna arrays.[10] Moreover, OET will address the further development of mmW measurement procedures with input from industry stakeholders and other interested parties and issue further KDB guidance.

b. Mobile Stations

166. As proposed in the *NPRM,* the Commission adopted a 43 dBm EIRP maximum mobile power limit in the 27.5–28.35 GHz, 37–38.6 GHz, and 38.6–40 GHz bands. The simulations and analyses by commenters indicate that this power level will be sufficient to provide the expected range and data rates. In addition, the power level is consistent with the Commission's rules for part 15 devices in the 57–64 GHz band that have been in place since 1995. The Commission is also encouraged by the strong support for this power limit, especially from commenters who indicate that they will manufacture equipment for these bands.

167. The Commission notes that UMFUS devices will be expected to comply with the Commission's rules regarding radiofrequency radiation exposure in addition to complying with the 43 dBm EIRP limit the Commission adopted. These radiofrequency radiation exposure rules specify more stringent exposure limits for devices that are designed to be used within 20 centimeters of the user's body. The Commission recognizes that such devices may have to limit their transmit power below the 43 dBm limit to meet exposure limits.

c. Transportable Stations

168. The Commission agrees with the majority of commenters that there is a need for an additional class of transportable stations requiring a maximum allowable power limit higher than the 43 dBm adopted for mobile user equipment stations. Higher power for such devices will increase range, enable higher data rates and provide for better coverage throughout buildings, which will allow consumers flexibility in installation locations to provide service where needed. These devices could be used to provide residential broadband service, which as the simulation results provided by Nokia illustrate will benefit from a higher transmit power than the Commission is allowing for mobile stations. The Commission adopted a 55 dBm EIRP maximum power limit for this for this class of equipment, which the Commission shall refer to as transportable stations. This 55 dBm limit represents a consensus that has been endorsed by commenters who have expressed an intention to manufacture UMFUS equipment. The Commission notes that in adopting this higher power limit for transportable stations that such devices will be expected to comply with the Commission's rules regarding radiofrequency exposure.

169. No commenter has proposed a definition of transportable devices for purposes of the Commission's rules. However, the terminology that most commenters have used suggests that such devices will be stationary while operating. Therefore, the Commission shall define a transportable device as transmitting equipment that is not intended to be used while in motion, but rather at stationary locations. The Commission believes this definition is appropriate because it will exclude portable devices that are meant to be carried by people while operating such as mobile phones or smart phones from transmitting at the higher power level. One commenter has suggested that these transportable devices could be built into

[10] *See* Federal Communications Commission, Office of Engineering and Technology, Laboratory Division, *Emissions Testing of Transmitters with Multiple Outputs in the Same Band* (October 31, 2013) and *MIMO with Cross-Polarized Antenna* (October 25, 2011) (*https://apps.fcc.gov/kdb/GetAttachment.html?id=B0ZQiTBTVsn3P3wZ2WdqhQ%3D%3D* and *https://apps.fcc.gov/kdb/GetAttachment.html?id=i%2BFRza%2B2Hh0pf9nHJHJGHw%3D%3D*). The Commission notes that OET has developed a substantial body of additional guidance that is available via public notices, frequently asked questions (FAQ's), and specific process guidance that is compiled in our online Knowledge Database (KDB). Equipment authorization topics that relate to new services and devices authorized by the Commission are often addressed in the KDB. This includes, for example, simple answers to questions, guidance on how to file for authorization of new types of devices, and guidance on how to conduct rule compliance testing. The staff guidance provided in the KDB is intended to assist the public in following Commission requirements. The guidance is not binding on the Commission and will not preclude the Commission from making a different decision in any matter that comes to its attention for resolution.

vehicles, which implies that they should be permitted to operate while in motion. The Commission has chosen not to expand the Commission's definition to include devices in moving vehicles because such devices in general will not need to transmit signals that penetrate walls and therefore will not require more power than mobile devices.

d. Terrestrial Aggregate Interference Concerns to FSS Satellite Receivers in 28 GHz

170. The analyses, provided by commenters, leads us to conclude that specific technical limits on UMFUS stations are not necessary at this time to address aggregate interference. As discussed in more detail below, the information in the record shows a wide disparity between assumptions and illustrates that much work must be done to accurately model mmW systems and the effects that these systems might have on co-channel satellite receivers. As a result, the Commission does not want to unduly restrict the development and growth of UMFUS unless the Commission has adequate evidence that actual harm will occur. The Commission does not believe the record demonstrates that there is a risk of interference to satellites from aggregate interference caused by UMFUS stations. Consequently, the Commission will not adopt a limit on aggregate skyward interference from 28 GHz band UMFUS stations or require that UMFUS stations employ specific techniques to reduce skyward emissions. The Commission observes that features such as antenna downtilt, suppression of sidelobes and adaptive power control will occur naturally because they are inherent characteristics of anticipated 5G technologies.

171. The analyses provided by the satellite operators are based on very conservative assumptions and provide for a worst case scenario regarding aggregate interference from future terrestrial networks. For example, the satellite analyses appear to assume terrestrial devices will continuously operate at maximum power levels and do not account for the fact that many UMFUS deployments will occur indoors. Most of the satellite analyses assume all terrestrial devices will be line of sight to the satellites with the exception of the analysis submitted jointly by the Satellite Operators, which assumes only a 9.6 dB attenuation for a 90% non-line of sight scenario. These analyses also assume a -12.2 dB interference criteria, which the Joint Filers point out has been under past review in language reflected in a Conference Preparatory Meeting report to WRC–15. The Joint Filers also note that some system parameters provided by Satellite Industry Association (SIA), such as satellite noise and receive beam gain, are based on the most sensitive projections about future, planned satellite network deployments, not necessarily satellite networks that currently exist.

172. While the Joint Filer's simulation results are not based on as conservative assumptions as the satellite operators, they vividly illustrate how the assumptions made can lead to vastly different conclusions. Assumptions such as the antenna pattern of the UMFUS devices, how many of the devices are line of sight to the satellites, the characteristics of the satellites, and the satellite interference criteria clearly can make an enormous difference in the number of devices that may transmit without interference occurring. Given that mmW technology is just being developed and the deployment scenarios of these devices are uncertain, many of these assumptions are speculative at this point and any conclusions that can be drawn from analyses or simulations at this point are necessarily tentative. The Commission also observes that no information has been submitted into the record as to how terrestrial licensees would demonstrate compliance with a limit on aggregate energy at each satellite or each point in the sky. While the Commission concludes that the various studies submitted by the parties do not support establishment of an aggregate interference limit or adoption of specific technical requirements to reduce skyward emissions, they do indicate the need for additional study on the effect of aggregate interference on satellite receivers. The Commission expects that the parties will continue to study this issue and inform the Commission of the outcome. The Commission will revisit this issue if additional information comes to the Commission's attention suggesting that regulatory requirements are necessary.

3. Out-of-Band Emission Limits

a. Use of Conductive Emission Limits

173. One of the implications of requiring an EIRP metric for the OOBE limit is that a transmitter has to meet the limit along the maximum EIRP direction. This makes meeting the radiative OOBE limit particularly challenging, as recognized by the commenters. In the mmW band, transmitters require higher gain antennas to compensate for significantly higher propagation losses and consequently the antennas will, in general, have much smaller beamwidth, as compared to other lower band mobile systems. As a result, OOBE of mmW transmitters have highly directive characteristics, concentrating the transmission power along a narrow beam in the direction of maximum EIRP. Furthermore, because the beam is narrow and because a transmitter needs to track the relative movement of its intended receiver in order to maintain the communication link, the OOBE of the mmW transmitter should be spatially averaged over the path of the receiver to reflect the spatially transient nature of the transmitter OOBE. In this regard, Qualcomm states that, ''based on its simulations to date, the average interference from a mobile and a base-station/small cell with a steerable/selectable array is very different and variable when compared to a fixed link. With mobile operations, the interference impact differs from fixed links due to the dynamic nature of the array, for it points in different directions as mobile users move and are served.'' The Commission believes these features of the mmW spectrum make the OOBE limit in the maximum EIRP direction less significant and a spatially averaged OOBE limit more appropriate. One way to spatially average OOBE of a transmitter is to determine its out of band TRP or by extension of its out of band conductive power.[11] To set forth a more suitable OOBE metric that reflects the aforementioned features of mmW band, the Commission should express the OOBE limit as an equivalent conductive limit. An equivalent conductive limit is consistent with the OOBE rule for other mobile systems.

174. Compliance with a conductive OOBE limit in the mobile mmW systems will be the same as other mobile systems where access to the antenna RF port(s) is available. Where access to the RF port(s) is not available, a somewhat more complicated process is necessary. For each frequency (or band), an emission measurement of the DUT must be performed along the direction of the maximum EIRP. The EIRP measurement value is then adjusted for the antenna gain along the same direction as the measured EIRP and at the same frequency (or band) to obtain a conductive OOBE power of the device. This process needs to be performed for

[11] TRP of a transmitter is closely related to its' conductive power. In fact, TRP is product of antenna radiation efficiency, e_r, and conductive power P ($TRP = e_r P$ and depending on antenna efficiency TRP can be virtually the same as the conductive power P. *See* W.L. Stutzman and Gary A. Thiele, *Antenna Theory and Design,* 2013, equations 13–40 and 2–155.

both polarization and, the respective conductive OOBE power summed, to obtain the total conductive OOBE power of the device. To obtain the antenna gain, licenses should use a validated antenna pattern computation, manufacturer supplied antenna pattern, or any other approach acceptable to the Commission as may be described in OET's KDB publications. The Commission recognizes that under certain circumstances the DUT antenna may interact with its supporting structure sufficiently enough that the interaction may require consideration through simulation or by an additional measurement step. One way to identify such circumstances may be through the antenna pattern validation step. Other means of identifying and considering such circumstances may be described in OET's KDB publications.

175. With respect to TRP, TRP measurement requires EIRP measurement of the device under test around spherical surface of the device for both polarizations, and as a result it can be time consuming and difficult. A reverberation chamber is deemed to be one of the most practical means of TRP measurement. However, as noted by Straight Path, TRP measurement in a reverberation chamber requires conducted power measurement of power amplifiers. Straight Path further argues that given that in many cases 5G transceiver power amplifiers and antennas may be integrated on a single printed circuit board, it is unclear how conducted measurement can be achieved for transceivers. Moreover, even if access to RF ports were to be made available, a conductive measurement would be far easier and economical to perform than TRP, as no over the air measurement would be required for conductive measurement. However, given that a number of commenters have requested TRP as a metric for OOBE, and given that TRP is a spatial averaging method, the Commission will allow TRP as the alternate metric for compliance. As there are no TRP measurement procedures currently defined, new measurement procedures will be developed through the FCC Laboratory's KDB process.

176. In the *NPRM* the Commission proposed a radiated OOBE limit that requires licensees to attenuate their unwanted radiated emission power below the transmission power (P) by a factor of at least $43 + 10\log_{10}(P)$ per MHz (or an absolute power of −13 dBm/MHz) for any emissions on frequencies outside the licensee's authorized spectrum. This radiated OOBE limit is consistent with the conductive OOBE limit that the Commission has generally required for other mobile systems. In addition, a number of commenters state that using TRP as a metric the proposed OOBE attenuation factor or absolute power of −13dBm/MHz would be feasible. For these reasons the Commission has set the OOBE limit for both conductive metric and TRP metric to −13 dBm/MHz. This may be used as a basis for developing further requirements that relate to transmitter performance by industry standard organizations. This limit applies to base stations, transportable, and mobile stations.

177. With respect to dBr radiated emission mask, the mask is significantly more relaxed than the −13 dBm/MHz absolute limit that a number of commenters support. In addition, the Commission finds that the equivalent conductive limit (or alternatively TRP) is the appropriate metric for OOBE in this band. For these reasons, the Commission declines to adopt the dBr radiated emission mask that Qualcomm proposes.

b. Licensed Block Edge Region

178. The Commission agrees with Ericsson, and some of the other commenters that a bandwidth-dependent unwanted emission requirement at the first megahertz adjacent to the licensed block discriminates against broadband systems. However, a bandwidth-independent unwanted emission requirement at the channel edge may not be sufficient for very large bandwidth channels, or may not be spectrally efficient for narrowband channels. As it is difficult at this nascent stage of mmW development to anticipate the future channel configuration of this technology, the Commission is relaxing the emission requirement at the channel edge dependent on channel bandwidth, so as to provide for the greatest latitude for channel configuration. For the first 10 percent of the channel bandwidth from the edge of the licensed block, the Commission requires an emission level of −5 dBm/MHz. Beyond the first 10 percent of the channel bandwidth, the Commission requires an emission level of −13 dBm/MHz. These requirements exceed Intel's request over the first 10 percent of the channel bandwidth immediately outside and adjacent to the licensee's frequency block. The permissible out of band power under these emission limits are higher than Nokia and Sprint recommendations over the first 10 percent of the channel bandwidth, but lower than Samsung's recommendations. Overall, the Commission believes these requirements balance the various comments on record.

4. Interference Protection and Coordination

a. Coordination and Field Strength Limits at Market Borders

i Base/Mobile Operations

179. The Commission agrees with the majority of commenters that some criteria is necessary at market boundaries to manage interference and coordination between adjacent area licensees. The Commission also believes that given the wide channel bandwidths and diversity of potential applications that might be deployed in these bands, any criteria that the Commission adopts should include a scaling factor for the bandwidth. Therefore, the Commission will adopt a PFD limit/MHz that base operations must meet at the licensee's market boundary, absent a mutual agreement between adjacent market licensees to exceed that value.

180. The Commission continues to believe that the 47dBuV/m field strength value that the Commission proposed in the *NPRM* is an appropriate basis on which to set a PFD limit for the mmW bands. This is the same limit that has been successfully used in the PCS, AWS, and BRS bands. However, the Commission notes that a field strength of 47dBuV/m results in a very conservative absolute power limit because field strength does not take into consideration the bandwidth and frequency components. Therefore, the Commission believes it is appropriate to convert a 47dBuV/m field strength to a PFD limit in terms of dBm/m²/MHz for the mmW bands. Looking again at the AWS, PCS, and BRS bands, the Commission notes that the equivalent PFD based on a 47dBuV/m field strength is within the range of −76 to −81 dBm/m²/MHz depending on what bandwidth is assumed. The Commission observes that these values bound the −77.6 dBm/m²/MHz PFD limit proposed by the joint filers. The Commission also recognizes that these values are higher than the −86 dBm/m²/MHz PFD proposed by Straight Path and the −90.3 dBm/m²/MHz PFD proposed by Intel. However, the Commission notes that Straight Path assumed an interference criteria of −10 dB I/N. In recent rulemakings the Commission has assumed an interference criteria of 0 dB I/N. Adjusting Straight Path's proposed limit to provide a 0dB I/N as opposed to a −10dB I/N yields a market boundary limit of −76 dBm/m²/MHz. The Commission also notes that Intel's

proposed PFD was based on worst case assumptions about the receive antenna gain, citing that the base station would have a gain of 29.1 dB in the direction of the interfering source. The Commission believes that this assumption is overly conservative. For example, the joint filers stated that a lower antenna gain is typically computed in the simulation towards the earth station since the receive beam is pointed in the direction of the transmitting UE, and it is statistically unlikely to coincide with the direction towards the earth station. Thus, on balance, the Commission believes that adopting a -77.6 dBm/m^2/MHz PFD limit as suggested by the joint filers, will protect terrestrial facilities in adjacent market areas from interference in a variety of different terrestrial to terrestrial use cases as well as the earth station to terrestrial scenario. Therefore, the Commission will adopt a market border PFD limit of -77.6 dBm/m^2/MHz measured at 1.5 meters above ground. The Commission emphasizes that this level is intended to be a coordination trigger and that adjacent licensees are free to coordinate mutually agreed upon limits that exceed this value along their common market boundaries. The Commission will also reserve the right to revisit the market border PFD limit in the future if it becomes necessary as technology and services develop in these bands.

ii. Fixed Point-to-Point Operations

181. The Commission agrees with Skyriver that a field strength limit would not be appropriate for fixed point-to-point operations because it would require large power reductions by fixed service providers. The Commission will retain the existing part 101 technical rules for traditional fixed point-to-point links. As such, the Commission believes that it is also appropriate to retain the existing requirement that fixed point-to-point operations within 16 kilometers (in the 38.6–40 GHz band) or 20 kilometers (in the 27.5–28.35 GHz band) of a licensee's market boundary must coordinate with co-channel licensees in adjacent market areas. With respect to Sprint's suggestion that the Commission impose a coordination requirement for adjacent channel licensees; in light of the OOBE limits that the Commission adopted, the Commission does not believe that any additional coordination requirement is necessary for adjacent channel operation.[12] The Commission seeks comment on further refining these coordination requirements in the *FNPRM.*

b. Canadian and Mexican Borders

182. In the *NPRM,* the Commission proposed to adopt a rule for the 27.5–28.35 GHz, 37–38.6 GHz, and 38.6–40 GHz bands similar to § 101.147(r)(13), 101.509(d), or 27.57 of the Commission's rules which provide that fixed and mobile operations are subject to existing and future international agreements with Mexico and Canada. The Commission noted that there are existing arrangements for fixed operations in the 27.5–28.35 GHz and 38.6–40.0 GHz bands between the United States and Canada. The Commission also noted that mmW operations must not cause harmful interference across any of the Commission's international borders. No parties filed comments with respect to this proposal.

183. Consistent with the Commission's rules for other services, the Commission adopted a rule that the 27.5–28.35 GHz, 37–38.6 GHz, and 38.6–40 GHz bands are subject to existing and future agreements with Mexico and Canada.

5. Operability

184. The Commission adopted its proposal to require operability across each millimeter wave band for mobile and transportable equipment. The Commission continues believe that interoperability delivers important benefits to consumers. While there is significant opposition in the record to an interoperability requirement, no commenter offered specific reasons why the type of operability proposed in the *NPRM* would be either technically infeasible or harmful as a policy matter in these bands. In addition, much of the opposition in the record appears to be based on an interpretation of an interoperability requirement that the Commission did not propose. The Commission therefore concludes that the benefit to consumers outweighs the burden to manufacturers in this regard.

185. Specifically, the Commission requires that any mobile or transportable device designed to operate within the 28 GHz band (27.5 GHz–28.35 GHz) be capable of operating at all frequencies within the 28 GHz band, on each air interface it uses to operate in the 28 GHz band, and similarly that a device operating in the 37 or 39 GHz bands be capable of operating at all frequencies within those bands (37 GHz–40 GHz). For example, a device that uses an LTE air interface to operate in a lower frequency band, and a future 5G air interface to operate in the 28 GHz band, would be compliant with this requirement if it could operate on frequencies from 27.5 GHz to 28.35 GHz using the 5G air interface.

186. For the purposes of this requirement, for the 37 GHz and 39 GHz bands, a device operating in either band must be capable of operating across the entirety of both bands, from 37 GHz to 40 GHz (including the 37–37.6 MHz lower block). This requirement will increase the market for equipment in these bands, and allow both smaller and larger service providers to benefit from economies of scale and increased equipment availability. Mandating operability will also facilitate shared use of the 37 GHz band by ensuring that a wide variety of equipment is available by both Federal agencies and non-Federal SALs.

187. The Commission emphasizes that it will not mandate compatibility of each device with all possible air interfaces to be used in these bands, as some commenters interpreted. Rather, the Commission will mandate that *with each air interface* used by a particular device in a millimeter wave band, that device must be capable of operating across the entire band. The Commission does not adopt any requirement that a device must be capable of utilizing any particular standard, technology, or air interface. Additionally, while the Commission does not require operability of base or fixed equipment, it is its expectation that licensees will work in good faith through the standards setting process to develop standards, as technically feasible, that support the operation of base and fixed equipment across each band.

6. Technical Rules for Part 15 Operation Within the 64–71 GHz Band

188. The Commission is adopting requirements for unlicensed operations in the 64–71 GHz band that are based on the technical standards used for the 57–64 GHz band under § 15.255 of the Commission's rules. Part 15 of the Commission's regulations permits the operation of radio frequency (RF) devices without an individual license from the Commission or the need for frequency coordination. The technical standards contained in part 15 are designed to ensure that there is a low probability that such devices will cause harmful interference to other users of the radio spectrum. Except for operating

[12] The Commission also notes that Sprint's assumption that ULS contains current station information is not entirely correct. While ULS does contain some information on leased links there is no requirement for licensees to report all fixed point-to-point links operating under their geographic licenses. Therefore the ULS database is an incomplete record of the existing point-to-point links.

on-board aircraft or satellites, and in mobile field disturbance sensor applications, any type of unlicensed operation is permitted within the 57–64 GHz band under § 15.255 of the Commission's rules.[13]

189. *Suitability of the Existing Rules in Section 15.255 to the 64–71 GHz Band.* In the *NPRM,* the Commission proposed to apply the existing rules in § 15.255 to the 64–71 GHz band with some adjustments, and sought comments on certain aspects of the rules to further the growth and development of devices without increasing the potential for harmful interference to authorized users in the bands. Proponents of unlicensed operations unanimously support the proposal to extend the technical rules in § 15.255 to cover the entire 57–71 GHz band. Google argues that harmonized rules for the frequencies between 57 and 71 GHz will allow economies of scale and other efficiencies, thereby facilitating rapid and widespread deployment of unlicensed devices; the Wi-Fi Alliance confirms that extending part 15 rules to the 64–71 GHz band would greatly enhance the capacity of next-generation WiGig technologies.'' The Commission finds that the existing technical rules in the 57–64 GHz band can successfully apply to the proposed 64–71 GHz adjacent band, with certain adjustments, as the Commission examines the pertinent rules in detail below.

a. Operation On-Board Aircraft

190. The Commission is reluctant to allow 60 GHz unlicensed operations on-board aircraft in the 57–71 GHz band at the present time. In the *NPRM,* the Commission did not propose to permit unlicensed operations on-board aircraft but sought to start the discussion to compile a comprehensive record on this subject. The Commission noted, there are substantial technical disagreements between the passive services licensees and the WiGig industry regarding the attenuation provided by aircraft components (*e.g.,* windows and fuselage) and how WiGig signals would propagate (*e.g.,* by direct line-of-sight or reflections, etc.) and aggregate. The Commission further observes that even among the WiGig industry advocates, there is technical disagreement. For example, ZII, a wireless inflight entertainment services and products provider, opposes on-board aircraft operation of WiGig devices in the 64–71 GHz band at the present time due to its findings of potential harmful interference to passive services above 63 GHz despite its financial interest in providing these services. Conversely, the Wi-Fi Alliance's analysis found no harmful interference to EESS and RAS in the entire 57–71 GHz spectrum. The Commission also finds that the studies and technical analyses submitted in the record are not persuasive for several reasons. First, the CEPT ECC and ITU reports do not address the 60 GHz band, but cover lower frequencies. Second, the various link budget analyses from the industry (*e.g.,* from ZII and Wi-Fi Alliance) do not show a technical consensus, at least for a portion of the proposed 57–71 GHz band, and cast doubt on the validity of certain assumptions used to derive these link budgets. Third, since the collaboration effort between the WiGig industry and NTIA/NSF/JPL (Jet Propulsion Laboratory) has not yet resolved many issues, as indicated by NRAO, a decision on the Commission's part at this time could prejudge the outcome of that work. Finally, the Commission notes that 60 GHz transmitters in mobile devices are only just beginning to be marketed, and the impact of their deployment in real-world scenarios will require time to be assessed adequately. Further, the technology will continue to evolve to address signal propagation challenges in the mmW spectrum such that analyses of WiGig transmissions on-board aircraft could change substantially once the Commission has wide deployments.

191. The Commission finds that further technical analyses and data are necessary before lifting the present operation restriction because the record so far did not reflect a clear perspective of the types of WiGig applications envisioned on-board aircraft, the priority/order of their planned introduction, etc., to provide an adequate assessment of their associated potential harmful interference profile as the Commission elaborates further in the *FNPRM* to seek additional information on this topic, *infra.* Specifically, the Commission requests sharing studies and data demonstrating that 60 GHz transmitters could operate on-board aircraft without causing harmful interference to passive sensor services in various types of inflight applications and on various types of aircraft.

192. Finally, the Commission finds that as long as the Commission does not permit 60 GHz operations on-board aircraft, the airlines (who control the aircraft) would not install access points operating at 60 GHz on airplanes to provide entertainment/broadband services to WiGig user devices. Without the presence of 60 GHz access points, the potential for widespread airborne WiGig transmissions is removed. The Commission also expects manufacturers/host integrators of WiGig transmitters that are incorporated into mobile devices, such as laptops, to provide instructions to end users regarding the prohibition of operating such transmitters' on-board aircraft, in compliance with the Commission's rules as part of the equipment authorization process. Consequently, end users will be aware of this rule to avoid device-to-device transmissions. Based on the above, the Commission is extending the restriction on on-board aircraft operation in § 15.255(a)(1) to cover the entire 57–71 GHz band.

b. Field Disturbance Sensor Operation

193. The Commission is reluctant at this time to lift the restriction on mobile field disturbance applications in the 60 GHz spectrum. At this time, the Commission does not have sufficient information about the operation of these mobile field disturbance sensors in this spectrum to allow general operation of all mobile field disturbance sensors. However, the Commission finds that the narrow application of mobile radars in short-range devices for interactive motion sensing, such as that described in Google's Project Soli,—where a radar is used to detect hand gestures very close to a device to control the device without touching it—could be allowed without causing harmful interference to other authorized users. As a first cautious step, the Commission will not permit these devices to operate at the same power levels as 60 GHz communications devices in this spectrum, as Google requests, but will allow these short-range devices to operate at the same low power levels as those permitted in existing *fixed* field disturbance sensors (i.e., 10 dBm peak EIRP and −10 dBm peak transmitter conducted output power, approximately 30 dB below the allowable power levels of WiGig communications devices). These power levels will ensure that the mobile radars will operate at very short distances—such as using hand gestures to control a watch, a smartphone's or tablet's screen—which will minimize their harmful interference potential. As the Commission acquires more experience with these devices, the Commission may consider allowing them higher power levels in the future. Accordingly, the Commission is

[13] A field disturbance sensor is defined as ''a device that establishes a radio frequency field in its vicinity and detects changes in that field resulting from the movement of persons or objects within its range.'' 47 CFR 15.3(l). Examples of unlicensed field disturbance sensors include radars operating under 47 CFR 15.252 or 15.256; and perimeter protection systems operating under 47 CFR 15.209(g) or 15.229.

amending § 15.255 to permit the operation of short-range devices for interactive motion sensing at 10 dBm peak EIRP and −10 dBm peak transmitter conducted output power over the entire 57–71 GHz band.

194. With respect to fixed field disturbance sensors, the Commission finds that these devices can continue to operate under the technical rules in § 15.255, as they have successfully done over the years, and that these rules may be extended to the 64–71 GHz band without increasing the potential for harmful interference to communication devices in the band. This would result in their wider usage in wireless factory automation processes in manufacturing facilities, such as those mentioned by Boeing. Accordingly, the Commission is amending § 15.255 to allow the operation of fixed field disturbance sensors over the entire 57–71 GHz band at the existing power limits permitted in the 57–64 GHz band (*i.e.,* 10 dBm peak EIRP and −10 dBm peak transmitter conducted output power).

c. Emission Limits

195. The Commission declines to increase the EIRP limits for low-power networking indoor and outdoor 60 GHz transmitters by a factor of 10 as requested by commenters. The Commission notes that the existing generous average and peak EIRP limits were adopted based on the very high oxygen attenuation in the 57–64 GHz band, which would ensure that unlicensed transmitters operating in this band do not cause harmful interference to other authorized services. The Commission further notes that the Commission proposed the same emission limits for the 64–71 GHz band, despite the fact that this band does not exhibit the same atmospheric attenuation characteristics, which would enable equipment operating in the proposed 64–71 GHz band at the same emission levels to effectively provide longer range and higher data throughput. The Commission finds that keeping the same emission limits in the absence of high oxygen attenuation in the 64–71 GHz band effectively provides an increase in power. No additional increase is necessary at this time and the Commission is amending the EIRP limits for 60 GHz transmitters in § 15.255 to apply across the 57–71 GHz band.

d. Spurious Emissions

196. The Commission observes that since the Commission first adopted part 15 rules for unlicensed operation in the 57–64 GHz band in the 1995–2000 time frame, 60 GHz unlicensed transmitters have been operating without causing harmful interference to RAS by their harmonic signals. This indicates that the Commission's spurious emission limits in § 15.255 for transmitters operating in the existing 57–64 GHz band are adequate for protecting these passive services. Thus, the Commission is concerned with the potential effect of the harmonics of fundamental signals in the proposed 64–71 GHz band. The Commission observes at the outset that the existing spurious emission limit in § 15.255, at 90 pW/cm^2, is extremely low as compared to the spurious limit adopted for other unlicensed transmitters operating in comparative spectrum, such as the 76–77 GHz, which, at 600 pW/cm^2, is more than 6 times higher than the spurious limit in § 15.255.

197. While acknowledging that attenuation effects due to oxygen become much less pronounced in the 64–71 GHz band as compared to the 57–64 GHz band, the Commission finds that interference to RAS stations is unlikely for the following reasons. First, RAS receivers discriminate against off-axis signals, are generally located in rural and remote areas, and radio astronomy observatories typically have control over access to a distance of one kilometer from the telescopes to provide protection from interference caused by uncontrolled radio frequency interference (RFI) sources. Second, the severe propagation losses of RF signals in the 64–71 GHz band, their ability to be blocked easily by terrain and obstacles, and the typically directional emissions of transmitters at these frequencies limit any potential for interference from fundamental emissions to a short distance (*e.g.,* 100–200 meters). Third, spurious and harmonic emissions generally roll off (*i.e.,* reduce in amplitude) the further they are in frequency from the fundamental emission; therefore, if fundamental emissions are severely attenuated, harmonics would be affected proportionally. Based on all these factors, the Commission finds that spurious and harmonic emissions of 57–71 GHz unlicensed transmitters at the very low limit of 90 pW/cm^2 in § 15.255 would not cause harmful interference to RAS operations. Accordingly, the Commission is amending the spurious emission rule in § 15.255 to apply across the 57–71 GHz band.

e. Publicly-Accessible Coordination Channel

198. Section 15.255(d) sets aside a publicly-accessible coordination channel in the 57.00–57.05 GHz band, in which only spurious emissions and emissions related to coordination techniques regarding interference management between diverse, non-interoperable, transmitters are permitted. The Commission observed in the *NPRM* that with recent technological advances and industry standardization, co-existence between 60 GHz devices is better resolved by voluntary standards than by a coordination channel requirement in the rules, and proposed to remove this requirement. Commenters unanimously agree with the Commission's assessment and support the elimination of this requirement to free a 50-megahertz swath of spectrum for communications usage. Accordingly, the Commission is removing the requirement for a publicly-accessible coordination channel from § 15.255.

f. Conducted Transmitter Output Power

199. Section 15.255(e) limits the peak transmitter conducted output power of 57–64 GHz unlicensed devices to 500 mW (*i.e.,* 27 dBm) for transmitters with an emission bandwidth of at least 100 MHz, and is reduced for systems that employ narrower bandwidths.

200. The Commission declines to remove this requirement. The reason for limiting the peak transmitter conducted output power while allowing very high EIRP limits (in this case, 40 dBm (10W) average/43 dBm (20W) peak) for an unlicensed transmitter is to ensure that the transmitter antenna beamwidth is kept sufficiently narrow to avoid causing harmful interference to other users in the band and to minimize the risk of RF exposure to humans. Accordingly, the Commission denies NCTA's request and amend the peak transmitter conducted output power requirement in § 15.255 to apply across the 57–71 GHz band.

g. Frequency Stability

201. Section 15.255(f) requires that fundamental emissions be contained within the 57–64 GHz frequency band during all conditions of operation; and that equipment be able to operate over the temperature range −20 to +50 degrees Celsius with an input voltage variation of 85% to 115% of rated input voltage. In the *NPRM,* the Commission proposed to apply the same requirements to transmitters operating in the 64–71 GHz band. No party objects to this proposal. Accordingly, the Commission is amending § 15.255 to apply across the 57–71 GHz band.

h. Co-Location of Separately-Authorized Transmitters

202. Section 15.255(h) allows group installation of transmitters that have

been tested separately for compliance with the rules and received separate equipment authorizations, as long as no transmitter in the group is equipped with external phase-locking inputs that permit beam-forming arrays to be realized. In the *NPRM,* the Commission indicated that this requirement seeks to prevent the possibility of producing a high-power coherent beam from discrete transmitters that have not been tested for compliance together. This could lead to non-compliance with the emission limits but it does not preclude the use of advanced antenna technologies with beam-forming arrays in any transmitter, as long as the emissions in any array configuration comply with the emission and RF exposure limits. The Commission proposed to apply the same requirement to equipment operating in the 64–71 GHz band. No party objects to this proposal. Accordingly, the Commission is amending § 15.255 to apply across the 57–71 GHz band.

7. Equipment Authorization

203. The OET was delegated authority by the Commission to administer the equipment authorization program for RF devices under part 2 of its rules. All RF devices subject to equipment authorization must comply with the Commission's rules prior to importation or marketing, by being tested for compliance with the applicable technical requirements, using measurement procedures that either follow guidance issued by OET through its KDB publications, or have been found to be acceptable to the Commission in accordance with § 2.947 of the rules.

a. Measurement Techniques

204. In the *NPRM,* the Commission recognized that there are some unique technical challenges specific to demonstrating compliance for the purpose of equipment authorization of millimeter wave devices. The Commission sought comments on a variety of challenges involved with measurements of in-band, out-of-band and spurious emissions. As discussed, *supra,* a number of parties discuss the measurement challenges concerning emission limit metrics. For example, certain parties oppose using EIRP as the metric for measuring OOBE limits, proposing instead a different metric using TRP, claiming consistency with recent academic research for multiple-input, multiple-output (MIMO) antenna arrays. However, TRP is not presently part of the Commission's measurement procedure guidance for devices using MIMO antennas. Commenters recommend that the Commission continue to provide guidance on acceptable new measurement procedures via OET's KDB publications. Commenters also recognize that 5G technology is in the early stages of equipment design and development so it is difficult at this point in time to identify all of the potential compliance and measurement challenges.

205. The Commission finds that the mmW technology will continue to evolve to address various technical challenges in this spectrum (with respect to propagation, interference protection, modulation techniques, transmission security, etc.), and pending new measurement equipment availability to cover the entire mmW spectrum that the Commission is making available for the next generation of wireless services herein, mmW measurement procedures are best developed by OET with the participation of interested parties. The Commission expects that OET will provide guidance on various acceptable measurement techniques for mmW devices through its KDB publications as products are developed.

b. RF Exposure Compliance

206. (RF) exposure compliance is an ongoing requirement for all transmitters authorized by the Commission. In the *NPRM,* the Commission proposed to similarly require compliance with the Commission's general RF exposure limits in §§ 1.1307(b), 2.1091 and 2.1093 of the rules for equipment operating in the UMFUS. While the Commission sought comment on this proposal alongside some of the other relevant technical challenges unique to compliance demonstration for devices envisaged to be operating under the UMFUS, the Commission acknowledged in the *NPRM* that any issues raised involving the present exposure limits themselves would be considered in the context of the Commission's separate proceeding on this particular issue.

207. With respect to the rules specific to UMFUS in part 30 of the Commission's rules, the Commission adopts the paragraph the Commission proposed in the *NPRM* that requires compliance with the Commission's general RF exposure limits in §§ 1.1307(b), 2.1091 and 2.1093 of the rules. The comments from industry advocate adopting alternative exposure limits, which the Commission continues to view as beyond the scope of this proceeding, and that will be considered in a separate proceeding. The Commission is not changing its fundamental exposure limits at this time in light of the devices to be expected under the UMFUS rules. More specifically, the Commission is not modifying its specified SAR values as a primary exposure limit between 100 kHz and 6 GHz, and the Commission will continue to use the specified MPE power density limit as a primary exposure limit above 6 GHz.

208. The Commission recognizes that there is a discontinuity at 6 GHz resulting from the fact that the Commission's rules do not specify a spatial averaging area (an area over which to average power density) or a spatial peak power density above 6 GHz that is consistent with the Commission's localized (over 1 gram) specific absorption rate (SAR) below 6 GHz. At lower frequencies for sources at least 20 cm from the body, spatial averaging over the entire body has been acceptable. However, both IEEE and International Commission on Non-Ionizing Radiation Protection (ICNIRP) have recognized that at higher frequencies spatial averaging areas need to be smaller. Of these specifications, the smaller and more conservative area is by ICNIRP, which has specified a spatial averaging area of 20 cm^2 above 10 GHz. While the Commission notes this as an apparently reasonable requirement the Commission is not suggesting any particular changes to the Commission's evaluation procedures at this time. The Commission will separately consider the broader questions of the RF exposure limits and how they should be applied in the Commission's RF *Inquiry.* In the meantime, as the Commission acknowledged in the *NPRM,* specific guidance on evaluating devices operating in this service will be issued by OET, and it is consistent with the Commission's existing discussions on spatial averaging to further clarify guidance on an area over which to average power density in the Commission's KDB publications through that process. Finally, the Commission acknowledges the variations between standards pointed out by the MMF and encourage further efforts on the specific issue of localized millimeter wave exposure by the standards setting bodies and the broader research community.

H. Other Allocation Issues

209. The Commission deletes the broadcasting and broadcasting-satellite service allocations from the 42 GHz band to better protect the radio astronomy observations of the 42.5–43.5 GHz band from out-of-band emissions. Further, the ubiquitous nature of the BSS and the broadcasting service would likely interfere with ubiquitous mobile deployment in similar ways to a ubiquitous fixed service deployment. As

previously noted, the BSS also poses an interference risk to adjacent RAS services. Nevertheless, the BSS will still retain 1.5 gigahertz of spectrum in the 40.5–42 GHz band for its future operations.

210. The Commission also declines to adopt its proposal to allocate the 42 GHz band for FSS downlink operations. Given the Commission's decision to grant FSS enhanced access to the 37.5–40 GHz band, and the fact that FSS has access to the 40.5–42 GHz band, the Commission find there is less reason to further expand FSS operations to the 42 GHz band. The Commission believes there is value in potentially having an UMFUS band available for exclusive terrestrial use, and the Commission addresses this issue in the companion *FNPRM.*

II. Procedural Matters

Final Regulatory Flexibility Analysis

211. As required by the Regulatory Flexibility Act of 1980, as amended (RFA), the Commission incorporated an Initial Regulatory Flexibility Analysis (IRFA) of the possible significant economic impact on a substantial number of small entities by the policies and rules proposed in the NPRM. No comments were filed addressing the IRFA. Because the Commission amends the rules in this Report and Order, the Commission has included this Final Regulatory Flexibility Analysis (FRFA) which conforms to the RFA.

1. Need for, and Objectives of, the Proposed Rules

212. In the attached *Report and Order,* the Commission increases the Nation's supply of spectrum for mobile broadband by adopting rules for fixed and mobile services in the 27.5–28.35 GHz band (28 GHz band), the 38.6–40 GHz band (39 GHz band), and the 37–38.6 GHz band (37 GHz band). The Commission also authorizes unlicensed operation pursuant to part 15 of its rules in the 64–71 GHz band. These bands are known collectively as the ''mmW bands.''

213. Until recently, the mmW bands were generally considered unsuitable for mobile applications because of propagation losses at such high frequencies and the inability of mmW signals to propagate around obstacles. As increasing congestion has begun to fill the lower bands and carriers have resorted to smaller and smaller microcells in order to re-use the available spectrum, however, industry is taking another look at the mmW bands and beginning to realize that at least some of its presumed disadvantages can be turned to advantage. For example, short transmission paths and high propagation losses can facilitate spectrum re-use in microcellular deployments by limiting the amount of interference between adjacent cells. Furthermore, where longer paths are desired, the extremely short wavelengths of mmW signals make it feasible for very small antennas to concentrate signals into highly focused beams with enough gain to overcome propagation losses. The short wavelengths of mmW signals also make it possible to build multi-element, dynamic beam-forming antennas that will be small enough to fit into handsets—a feat that might never be possible at the lower, longer-wavelength frequencies below 6 GHz where cell phones operate today.

214. In the 28 GHz, 39 GHz, and 37 GHz bands, the Commission creates a new radio service in a new rule part that will authorize fixed and mobile services—the part 30 Upper Microwave Flexible Use Service. This additional spectrum for mobile use will help ensure that the speed, capacity, and ubiquity of the nation's wireless networks keeps pace with the skyrocketing demand for mobile service. It will also make possible new types of services for consumers and businesses.

215. The service rules the Commission adopted make additional spectrum available for flexible use. In creating service rules for these bands, which include technical rules to protect against harmful interference, licensing rules to establish geographic license areas and spectrum block sizes, and performance requirements to promote robust buildout, the Commission advances toward enabling rapid and efficient deployment. The Commission does so by providing flexible service, technical, assignment, and licensing rules for this spectrum, except where special provisions are necessary to facilitate shared use with other co-primary users.

216. For the 28 GHz 37 GHz, and 39 GHz bands, the Commission proposes to assign licenses by competitive bidding using counties as the area for geographic area licensing in the 28 GHz band and in a portion of 37 GHz band (37–37.6 GHz). The Commission will award PEA-based licenses by competitive bidding for the 39 GHz and the upper portion of the 37 GHz band (37.6–38.6 GHz). In the 37–37.6 GHz band, the Commission has created a 600 MHz shared access space with rule-based, non-interfering Shared Access Licenses (SALs) which will share the band with Federal fixed and mobile operations. SAL licensees are not guaranteed spectrum access or interference protection from individual licensees. The Commission believes this system at 37 GHz will create an innovative shared space that can be used by a wide variety of Federal and non-Federal users, by new entrants and by established operators—and small businesses in particular—to experiment with new technologies in the mmW space and innovate.

217. At the same time, because the 28 GHz, 39 GHz, and 37 GHz bands are shared with satellite services, the Commission has taken steps to facilitate sharing with satellite uses in ways that are consistent with fixed and mobile use of the bands. Specifically, the Commission concludes the Commission will authorize a limited number of satellite earth stations to operate on a co-primary basis—one in each county for the 28 GHz band and one in each PEA in the 37.5–40 GHz band—on a first-come, first-served basis. In the 28 GHz band the Commission will grandfather pre-existing satellite earth stations in any county into a local interference zone with the right to operate under the terms of their existing authorizations. These FSS earth stations must comply with certain enumerated conditions to obtain an authorization for their specific locations, including coordinating their operations with any existing mmW licensees to ensure non-interference between the services. Additional earth stations can be located if the FSS operator acquires a part 30 license, reaches a contractual agreement with the part 30 licensee, or agrees to operate on a secondary basis.

218. Overall, the new provisions the Commission is adopting are designed to allow licensees to choose their type of service offerings, to encourage innovation and investment in mobile and fixed use in this spectrum, and to provide a stable regulatory environment in which fixed, mobile, and satellite deployment will be able to develop through the application of flexible rules. The market-oriented licensing framework for these bands will ensure that this spectrum is efficiently utilized and will foster the development of new and innovative technologies and services, as well as encourage the growth and development of a wide variety of services, ultimately leading to greater benefits to consumers.

2. Summary of Significant Issues Raised by Public Comments in Response to the IRFA

219. No comments were filed in direct response to the IRFA.

3. Response to Comments by the Chief Counsel for Advocacy of the Small Business Administration

220. Pursuant to the Small Business Jobs Act of 2010, which amended the RFA, the Commission is required to respond to any comments filed by the Chief Counsel for Advocacy of the Small Business Administration (SBA), and to provide a detailed statement of any change made to the proposed rules as a result of those comments. The Chief Counsel did not file any comments in response to the proposed rules in this proceeding.

4. Description and Estimate of the Number of Small Entities to Which the Proposed Rules Will Apply

221. The RFA directs agencies to provide a description of, and where feasible, an estimate of the number of small entities that may be affected by the proposed rules and policies, if adopted. The RFA generally defines the term ''small entity'' as having the same meaning as the terms ''small business,'' ''small organization,'' and ''small governmental jurisdiction.'' In addition, the term ''small business'' has the same meaning as the term ''small business concern'' under the Small Business Act. A ''small business concern'' is one which: (1) Is independently owned and operated; (2) is not dominant in its field of operation; and (3) satisfies any additional criteria established by the SBA.

222. *Small Businesses, Small Organizations, and Small Governmental Jurisdictions.* The Commission's action may, over time, affect small entities that are not easily categorized at present. The Commission therefore describes here, at the outset, three comprehensive, statutory small entity size standards. First, nationwide, there are a total of approximately 28.2 million businesses, 99.7 percent of which are small, according to the SBA. In addition, a ''small organization'' is generally ''any not-for-profit enterprise which is independently owned and operated and is not dominant in its field.'' Nationwide, as of 2007, there were approximately 1,621,315 small organizations. Finally, the term ''small governmental jurisdiction'' is defined generally as ''governments of cities, towns, townships, villages, school districts, or special districts, with a population of less than fifty thousand.'' Census Bureau data for 2011 indicate that there were 89,476 local governmental jurisdictions in the United States. The Commission estimates that, of this total, as many as 88,506 entities may qualify as ''small governmental jurisdictions.'' Thus, the Commission estimates that most governmental jurisdictions are small.

223. *Wireless Telecommunications Carriers (except satellite).* The appropriate size standard under SBA rules is for the category Wireless Telecommunications Carriers. Under that size standard, such a business is small if it has 1,500 or fewer employees. Census Bureau data for 2012, show that there were 967 firms in this category that operated for the entire year. Of this total, 955 had employment of 999 or fewer, and 12 firms had employment of 1,000 employees or more. Thus under this category and the associated small business size standard, the Commission estimates that the majority of wireless telecommunications carriers (except satellite) are small entities that may be affected by the Commission's action.

224. *Fixed Microwave Services.* Microwave services include common carrier, private-operational fixed, and broadcast auxiliary radio services. They also include the Local Multipoint Distribution Service (LMDS), the Digital Electronic Message Service (DEMS), the 39 GHz Service (39 GHz), the 24 GHz Service, and the Millimeter Wave Service where licensees can choose between common carrier and non-common carrier status. At present, there are approximately 61,970 common carrier fixed licensees, 62,909 private and public safety operational-fixed licensees, 20,349 broadcast auxiliary radio licensees, 412 LMDS licenses, 35 DEMS licenses, 870 39 GHz licenses, and five 24 GHz licenses, and 408 Millimeter Wave licenses in the microwave services. The Commission has not yet defined a small business with respect to microwave services. For purposes of the FRFA, the Commission will use the SBA's definition applicable to Wireless Telecommunications Carriers (except satellite)—*i.e.,* an entity with no more than 1,500 persons is considered small. Under that size standard, such a business is small if it has 1,500 or fewer employees. Census Bureau data for 2012, show that there were 967 firms in this category that operated for the entire year. Of this total, 955 had employment of 999 or fewer, and 12 firms had employment of 1,000 employees or more. Thus under this category and the associated small business size standard, the Commission estimates that the majority of wireless telecommunications carriers (except satellite) are small entities that may be affected by the Commission's proposed action. The Commission notes that the number of firms does not necessarily track the number of licensees. The Commission estimates that virtually all of the Fixed Microwave licensees (excluding broadcast auxiliary licensees) would qualify as small entities under the SBA definition.

225. *Satellite Telecommunications and All Other Telecommunications.* Two economic census categories address the satellite industry. The first category has a small business size standard of $32.5 million or less in average annual receipts, under SBA rules. The second also has a size standard of $32.5 million or less in annual receipts.

226. The category of Satellite Telecommunications ''comprises establishments primarily engaged in providing telecommunications services to other establishments in the telecommunications and broadcasting industries by forwarding and receiving communications signals via a system of satellites or reselling satellite telecommunications.'' Census Bureau data for 2012 show that 333 Satellite Telecommunications firms operated for that entire year. Of this total, 275 firms had annual receipts of under $10 million, and 58 firms had receipts of $10 million to $24,999,999. Consequently, the Commission estimates that the majority of Satellite Telecommunications firms are small entities that might be affected by the Commission's action.

227. The second category, *i.e.,* ''All Other Telecommunications,'' comprises ''establishments primarily engaged in providing specialized telecommunications services, such as satellite tracking, communications telemetry, and radar station operation. This industry also includes establishments primarily engaged in providing satellite terminal stations and associated facilities connected with one or more terrestrial systems and capable of transmitting telecommunications to, and receiving telecommunications from, satellite systems. Establishments providing Internet services or voice over Internet protocol (VoIP) services via client-supplied telecommunications connections are also included in this industry.'' For this category, Census Bureau data for 2012 show that there were a total of 1442 firms that operated for the entire year. Of this total, 1400 firms had annual receipts of under $25 million, and 42 firms had annual receipts of $25 million to $49, 999,999. Consequently, the Commission estimates that the majority of All Other Telecommunications firms are small entities that might be affected by the Commission's action.

228. *Radio and Television Broadcasting and Wireless Communications Equipment*

Manufacturing. The proposed rules relating to part 15 operation pertain to manufacturers of unlicensed communications devices. The Census Bureau defines this category as follows: ''This industry comprises establishments primarily engaged in manufacturing radio and television broadcast and wireless communications equipment. Examples of products made by these establishments are: Transmitting and receiving antennas, cable television equipment, GPS equipment, pagers, cellular phones, mobile communications equipment, and radio and television studio and broadcasting equipment.'' The SBA has developed a small business size standard for firms in this category, which is: All such firms having 750 or fewer employees. According to Census Bureau data for 2007, there were a total of 939 establishments in this category that operated for part or all of the entire year. Of this total, 784 had less than 500 employees and 155 had more than 100 employees. Thus, under this size standard, the majority of firms can be considered small.

5. Description of Projected Reporting, Recordkeeping, and Other Compliance Requirements

229. The projected reporting, recordkeeping, and other compliance requirements proposed in the *Report and Order* will apply to all entities in the same manner. The revisions the Commission adopts should benefit small entities by giving them more information, more flexibility, and more options for gaining access to wireless spectrum.

230. Any applicants for Upper Microwave Flexible Use Service licenses will be required to file license applications using the Commission's automated Universal Licensing System (ULS). ULS is an online electronic filing system that also serves as a powerful information tool, one that enables potential licensees to research applications, licenses, and antenna structures. It also keeps the public informed with weekly public notices, FCC rulemakings, processing utilities, and a telecommunications glossary. Upper Microwave Flexible Use Service applicants that must submit long-form license applications must do so through ULS using Form 601, FCC Ownership Disclosure Information for the Wireless Telecommunications Services using FCC Form 602, and other appropriate forms.

231. Licensees in the Upper Microwave Flexible Use Service will be subject to performance requirements based on a series of metrics, tailored to each type of service a licensee may offer. Accordingly, mobile services will be required to provide service to 40 percent of the population of their license area by the end of their initial license terms. Geographic area licensees providing Fixed Service in the 28 GHz, 37 GHz and 39 GHz will be required to construct and operate at least 15 links per million persons in the population. Satellite operators will be able to meet their build-out requirement by deploying an operational earth station in the license area that provides service. Licensees deploying a mix of such services will be able to choose which performance metric—or combination thereof—they desire to meet. Performance will be assessed on a license area basis, regardless of license area size. For the 28 GHz band, licenses will terminate automatically if a licensee fails to meet the applicable performance requirements. For geographic area licenses in the 37 and 39 GHz bands, licensees will have the option of partitioning their licenses on a county basis to come into compliance with the relevant performance metric. Licensees will be required to provide information to the Commission on the facilities they have constructed, the nature of the service they are providing, and the extent to which they are providing coverage in their license area, to both facilitate sharing with other authorized services and to enable accurate assessment of their performance. Incumbent licensees will be granted time to transition to these new performance requirements. FSS operators will have to coordinate their operations with any existing mmW licensees to ensure non-interference between the services.

232. New licensees will also be required, within three years after receiving their licenses but no later than six months prior to deployment, to file with the Commission a security statement signed by a senior licensee executive with personal knowledge of the licensee's security plans and practice, which must include, at a minimum, the following elements: (1) A high-level, general description of the licensee's security approach designed to safeguard the planned network's confidentiality, integrity, and availability with respect to communications from: A device to the licensee's network; one element of the licensee's network to another element on the licensee's network; the licensee's network to another network; and device to device (with respect to telephone voice and messaging services); (2) a high-level, general description of the licensee's approach to assessing and mitigating cyber risk induced by the presence of multiple participants in the band. This should include the high level approach taken toward ensuring consumer network confidentiality, integrity, and availability security principles, which are to be protected in each of the following use cases: Communications between a wireless device and the licensee's network; communications within and between each licensee's network; communications between mobile devices that are under end-to-end control of the licensee; and communications between mobile devices that are not under the end-to-end control of the licensee; (3) a high-level description of relevant cybersecurity standards and practices to be employed, whether industry-recognized or related to some other identifiable approach; (4) a description of the extent to which the licensee participates with standards bodies or industry-led organizations pursuing the development or maintenance of emerging security standards and/or best practices; (5) the high-level identification of any other approaches to security, unique to the services and devices the licensee intends to offer and deploy; and (6) plans to incorporate relevant outputs from Information Sharing and Analysis Organizations (ISAOs) as elements of the licensee's security architecture. Plans should include comment on machine-to-machine threat information sharing.

233. All of the filing, recordkeeping and reporting requirements associated with the demands described above, including professional, accounting, engineering or survey services used in meeting these requirements will be the same for large and small businesses that intend to utilize these new UMFUS licenses, but as described below, several steps have been taken that will alleviate burdens on small businesses in particular.

6. Steps Taken To Minimize Significant Economic Impact on Small Entities, and Significant Alternatives Considered

234. The RFA requires an agency to describe any significant alternative that it has considered in reaching its approach, which may include the following four alternatives (among others): (1) The establishment of differing compliance or reporting requirements or timetables that take into account the resources available to small entities; (2) the clarification, consolidation, or simplification of compliance or reporting requirements under the rule for small entities; (3) the

use of performance, rather than design, standards; and (4) an exemption from coverage of the rule, or any part thereof, for small entities.

235. As noted above, the various construction and performance requirements and their associated showings will be the same for large and small businesses that license the Upper Microwave Flexible Use Service bands. To the extent the same cost of complying with these burdens is relatively greater for smaller businesses than for large ones, these costs are necessary to effectuate the purpose of the Communications Act, namely to further the efficient use of spectrum and to prevent spectrum warehousing. Likewise compliance with the Commission's service and technical rules and coordination requirements are necessary for the furtherance of the Commission's goals of protecting the public while also providing interference free services. Large and small businesses must therefore comply with these rules and requirements, but the Commission has taken steps to alleviate the burden on small businesses that seek to comply with these requirements, as discussed below.

236. The *Report and Order* provides that in the 28 GHz, 37 GHz and 39 GHz bands, mmW licensees will have the flexibility to provide any fixed or mobile service that is consistent with their spectrum allocation. This breaks with the recent past in which licensees were limited to only single use licenses in these bands, and such new flexibility benefits small businesses by giving them more avenues for gaining access to valuable wireless spectrum. In addition, licensees will be able to make a showing based on a combination of fixed and mobile service, simplifying this process for all licensees including small businesses. The Commission has also extended the existing renewal deadlines for incumbent licensees in the 28 and 39 GHz bands, giving these licensees, including small businesses in these bands, additional time until 2024 to meet the performance requirements pertaining to their current licenses.

237. Furthermore, the license areas chosen in the *Report and Order* should provide spectrum access opportunities for smaller carriers by giving them access to less densely populated areas that match their footprints. For example, the *Report and Order* transitions the 28 GHz band from being licensed on the BTA basis to a much smaller license area—counties. Similarly, the Commission transitions the 39 GHz band from being licensed via Economic Areas (''EAs'') to the smaller Partial Economic Areas (''PEAs''). The Commission also uses PEAs for the 37 GHz band, which will be newly licensed. The Commission abandons its proposed ''hybrid licensing scheme'' in the 37 GHz band and has instead opted to use geographic area licensing with PEAs in the upper 37.6–38.6 GHz portion with county-based licensing in the lower band (37.0–37.6 GHz). Finally, the Commission has created an unlicensed space in the 64–71 GHz band. However, the *Report and Order* also permits partitioning and disaggregation by licensees in the mmW bands. While PEAs and counties are small enough to provide spectrum access opportunities for smaller carriers and PEAs could even be further disaggregated, these units of area also nest within and may be aggregated to form larger license areas. Therefore, the benefits and burdens resulting from assigning spectrum in PEA and county license areas are equivalent for small and large businesses. The 400 MHz shared space the Commission has created in the lower 37 GHz band (37.0–37.6 GHz) should also provide ease-of-entry and plenty of space for opportunistic and innovative uses that could be developed by small businesses. These rules should enable providers, or any entities large or small providing service in the mmW bands, to more easily adjust their spectrum holdings and build their networks pursuant to individual business plans. The Commission believes this should result in small businesses having an easier time acquiring or accessing spectrum.

238. Licensees may also adjust their geographic coverage through auction in those areas where the Commission is permitting geographic area auctions or through the secondary markets. The *Report and Order* concludes it will auction licenses in the mmW bands in conformity with the general competitive bidding rules set forth in part 1, subpart Q, of the Commission's rules, and substantially consistent with the competitive bidding procedures that have been employed in previous auctions. The procedures the Commission has adopted contain provisions to assist small entities in competitive bidding. The Commission will employ the part 1 rules governing competitive bidding design, designated entity preferences, unjust enrichment, application and payment procedures, reporting requirements, and the prohibition on certain communications between auction applicants. Furthermore, qualifying ''small businesses''—those with gross revenues for the preceding three years not exceeding $55 million—will be provided with a bidding credit of 15 percent, and ''very small businesses''—those with average annual gross revenues for the preceding three years not exceeding $20 million—with a bidding credit of 25 percent. Providing small businesses and very small businesses with bidding credits will provide an economic benefit to small entities by making it easier for small entities to acquire spectrum or access to spectrum in these bands.

239. Furthermore, the *Report and Order* provides for licensing of this spectrum under market-oriented rules. This includes applying the Commission's secondary market policies and rules to all transactions involving the use of mmW bands, which will provide greater predictability and regulatory parity with bands licensed for mobile broadband service. These rules should make it easier for mmW providers to enter secondary market arrangements involving use of their spectrum. The secondary market rules apply equally to all entities, whether small or large. As a result, the Commission believes that this will provide an economic benefit to small entities by making it easier for entities, whether large or small, to enter into secondary market arrangements for mmW spectrum.

240. The *Report and Order* also adopts an operability requirement such that any device designed to operate within the 37 GHz and 39 GHz bands (37–40 GHz) must be capable of operating on all frequencies within those bands. This operability requirement will ensure that devices developed for the geographic area licensed portion of the band will also operate in the innovation shared space, making it easier for smaller businesses with fewer resources to find equipment that can operate across multiple bands. The technical rules in the *Report and Order* will also allow licensees of the mmW spectrum to operate while protecting licensees in nearby spectrum from harmful interference, some of whom may be small entities.

241. Finally, the proposals to facilitate satellite service in the 28 GHz and 37.5–40 GHz bands should also assist small satellite businesses.

7. Federal Rules That May Duplicate, Overlap, or Conflict With the Proposed Rules

242. None.

J. Ordering Clauses

243. Accordingly, *it is ordered,* pursuant to Sections 1, 2, 3, 4, 5, 7, 10, 201, 225, 227, 301, 302, 302a, 303, 304, 307, 309, 310, 316, 319, 332, and 336 of

the Communications Act of 1934, 47 U.S.C. 151, 152, 153, 154, 155, 157, 160, 201, 225, 227, 301, 302, 302a, 303, 304, 307, 309, 310, 316, 319, 332, 336, Section 706 of the Telecommunications Act of 1996, as amended, 47 U.S.C. 1302, and § 1.411 of the Commission's Rules, 47 CFR 1.411, that this *Report and Order and Further Notice of Proposed Rulemaking* is hereby *adopted.*

244. *It is further ordered* pursuant to section 4(i) of the Communications Act of 1934, 47 U.S.C. 154(i), that the Commission's Consumer and Governmental Affairs Bureau, Reference Information Center, *shall* send a copy of this *Report and Order and Further Notice of Proposed Rulemaking,* including the Final and Initial Regulatory Flexibility Analysis, to the Chief Counsel for Advocacy of the Small Business Administration.

245. *It is further ordered* that the petition for rulemaking filed by the Fixed Wireless Communications Coalition (RM–11664) is denied with respect to the 42–42.5 GHz band.

246. *It is further ordered* that the Commission *shall* send a copy of this *Report and Order and Further Notice of Proposed Rulemaking* to Congress and the Government Accountability Office pursuant to the Congressional Review Act, *see* 5 U.S.C. 801(a)(1)(A).

List of Subjects in 47 CFR Parts 1, 2, 15, 25, 30 and 101

Communications common carriers, Communications equipment, Reporting and recordkeeping requirements.

Federal Communications Commission.

Marlene H. Dortch,

Secretary.

Final Rules

For the reasons discussed in the preamble, the Federal Communications Commission amends 47 CFR parts 1, 2, 15, 25, 30 and 101 as follows:

PART 1—PRACTICE AND PROCEDURE

■ 1. The authority citation for part 1 is revised to read as follows:

Authority: 47 U.S.C. 151, 154(i), 154(j), 155, 157, 160, 201, 225, 227, 303, 309, 332, 1403, 1404, 1451, 1452, and 1455.

■ 2. Section 1.907 is amended by revising the definitions for ''Wireless Radio Services'' and ''Wireless Telecommunications Services'' to read as follows:

§ 1.907 Definitions.

* * * * *

Wireless Radio Services. All radio services authorized in parts 13, 20, 22, 24, 26, 27, 30, 74, 80, 87, 90, 95, 96, 97 and 101 of this chapter, whether commercial or private in nature.

Wireless Telecommunications Services. Wireless Radio Services, whether fixed or mobile, that meet the definition of ''telecommunications service'' as defined by 47 U.S.C. 153, as amended, and are therefore subject to regulation on a common carrier basis. Wireless Telecommunications Services include all radio services authorized by parts 20, 22, 24, 26, 27, and 30 of this chapter. In addition, Wireless Telecommunications Services include Public Coast Stations authorized by part 80 of this chapter, Commercial Mobile Radio Services authorized by part 90 of this chapter, common carrier fixed microwave services, Local Television Transmission Service (LTTS), Local Multipoint Distribution Service (LMDS), and Digital Electronic Message Service (DEMS), authorized by part 101 of this chapter, and Citizens Broadband Radio Services authorized by part 96 of this chapter.

■ 3. Section 1.1307 is amended by adding an entry for ''Upper Microwave Flexible Use Service (part 30)'' above the entry for ''Radio Broadcast Services (part 73)'' in Table 1 in paragraph (b)(1) and revising paragraph (b)(2)(i) to read as follows:

§ 1.1307 Actions that may have a significant environmental effect, for which Environmental Assessments (EAs) must be prepared.

* * * * *

(b) * * *

(1) * * *

TABLE 1—TRANSMITTERS, FACILITIES AND OPERATIONS SUBJECT TO ROUTINE ENVIRONMENTAL EVALUATION

Service (title 47 CFR rule part)	Evaluation required if:
* *	* * * * *
Upper Microwave Flexible Use Service (part 30).	Non-building-mounted antennas: Height above ground level to lowest point of antenna <10 m and power >1640 W EIRP. Antennas are mounted on buildings.
* *	* * * * *

(2)(i) Mobile and portable transmitting devices that operate in the Commercial Mobile Radio Services pursuant to part 20 of this chapter; the Cellular Radiotelephone Service pursuant to part 22 of this chapter; the Personal Communications Services (PCS) pursuant to part 24 of this chapter; the Satellite Communications Services pursuant to part 25 of this chapter; the Miscellaneous Wireless Communications Services pursuant to part 27 of this chapter; the Upper Microwave Flexible Use Service pursuant to part 30 of this chapter; the Maritime Services (ship earth stations only) pursuant to part 80 of this chapter; the Specialized Mobile Radio Service, the 4.9 GHz Band Service, or the 3650 MHz Wireless Broadband Service pursuant to part 90 of this chapter; the Wireless Medical Telemetry Service (WMTS), or the Medical Device Radiocommunication Service (MedRadio) pursuant to part 95 of this chapter; or the Citizens Broadband Radio Service pursuant to part 96 of this chapter are subject to routine environmental evaluation for RF exposure prior to equipment authorization or use, as specified in §§ 2.1091 and 2.1093 of this chapter.

* * * * *

■ 4. Section 1.9001 is amended by revising paragraph (a) to read as follows:

§ 1.9001 Purpose and scope.

(a) The purpose of part 1, subpart X is to implement policies and rules pertaining to spectrum leasing arrangements between licensees in the services identified in this subpart and spectrum lessees. This subpart also implements policies for private commons arrangements. These policies and rules also implicate other Commission rule parts, including parts 1, 2, 20, 22, 24, 25, 27, 30, 80, 90, 95,

and 101 of title 47, chapter I of the Code of Federal Regulations.

* * * * *

■ 5. Section 1.9005 is amended by revising paragraphs (hh) through (kk) and adding paragraph (ll) to read as follows:

§ 1.9005 Included services.

* * * * *

(hh) The Multipoint Video Distribution and Data Service (part 101 of this chapter);

(ii) The 700 MHz Guard Bands Service (part 27 of this chapter);

(jj) The ATC of a Mobile Satellite Service (part 25 of this chapter);

(kk) The 600 MHz band (part 27 of this chapter); and

(ll) The Upper Microwave Flexible Use Service (part 30 of this chapter).

PART 2—FREQUENCY ALLOCATIONS AND RADIO TREATY MATTERS; GENERAL RULES AND REGULATIONS

■ 6. The authority citation for part 2 continues to read as follows:

Authority: 47 U.S.C. 154, 302a, 303, and 336, unless otherwise noted.

■ 7. Section 2.106 is amended as follows:

■ a. Pages 55, 57, 58, and 61 are revised.

■ b. In the list of United States (US) Footnotes, footnote US151 is added.

■ c. In the list of Non-Federal Government (NG) Footnotes, footnote NG63 is added.

The revisions and additions read as follows:

§ 2.106 Table of Frequency Allocations.

* * * * *

BILLING CODE 6712–01–P

Table of Frequency Allocations			27-34.7 GHz (SHF/EHF)		Page 55
International Table			United States Table		FCC Rule Part(s)
Region 1 Table	Region 2 Table	Region 3 Table	Federal Table	Non-Federal Table	
27-27.5 FIXED INTER-SATELLITE 5.536 MOBILE	27-27.5 FIXED FIXED-SATELLITE (Earth-to-space) INTER-SATELLITE 5.536 5.537 MOBILE		27-27.5 FIXED INTER-SATELLITE 5.536 MOBILE	27-27.5 Inter-satellite 5.536	RF Devices (15)
27.5-28.5 FIXED 5.537A FIXED-SATELLITE (Earth-to-space) 5.484A 5.516B 5.539 MOBILE 5.538 5.540			27.5-30	27.5-29.5 FIXED FIXED-SATELLITE (Earth-to-space) MOBILE	RF Devices (15) Satellite Communications (25) Upper Microwave Flexible Use (30) Fixed Microwave (101)
28.5-29.1 FIXED FIXED-SATELLITE (Earth-to-space) 5.484A 5.516B 5.523A 5.539 MOBILE Earth exploration-satellite (Earth-to-space) 5.541 5.540					
29.1-29.5 FIXED FIXED-SATELLITE (Earth-to-space) 5.516B 5.523C 5.523E 5.535A 5.539 5.541A MOBILE Earth exploration-satellite (Earth-to-space) 5.541 5.540					
29.5-29.9 FIXED-SATELLITE (Earth-to-space) 5.484A 5.516B 5.539 Earth exploration-satellite (Earth-to-space) 5.541 Mobile-satellite (Earth-to-space) 5.540 5.542	29.5-29.9 FIXED-SATELLITE (Earth-to-space) 5.484A 5.516B 5.539 MOBILE-SATELLITE (Earth-to-space) Earth exploration-satellite (Earth-to-space) 5.541 5.525 5.526 5.527 5.529 5.540 5.542	29.5-29.9 FIXED-SATELLITE (Earth-to-space) 5.484A 5.516B 5.539 Earth exploration-satellite (Earth-to-space) 5.541 Mobile-satellite (Earth-to-space) 5.540 5.542		29.5-30 FIXED-SATELLITE (Earth-to-space) MOBILE-SATELLITE (Earth-to-space) 5.525 5.526 5.527 5.529 5.543	Satellite Communications (25)
29.9-30 FIXED-SATELLITE (Earth-to-space) 5.484A 5.516B 5.539 MOBILE-SATELLITE (Earth-to-space) Earth exploration-satellite (Earth-to-space) 5.541 5.543 5.525 5.526 5.527 5.538 5.540 5.542					
30-31 FIXED-SATELLITE (Earth-to-space) 5.338A MOBILE-SATELLITE (Earth-to-space) Standard frequency and time signal-satellite (space-to-Earth) 5.542			30-31 FIXED-SATELLITE (Earth-to-space) MOBILE-SATELLITE (Earth-to-space) Standard frequency and time signal-satellite (space-to-Earth) G117	30-31 Standard frequency and time signal-satellite (space-to-Earth)	

Table of Frequency Allocations			34.7-46.9 GHz (EHF)			Page 57
International Table			United States Table			FCC Rule Part(s)
Region 1 Table	Region 2 Table	Region 3 Table	Federal Table	Non-Federal Table		
34.7-35.2 RADIOLOCATION Space research 5.550 5.549			34.7-35.5 RADIOLOCATION US360 G117	34.7-35.5 Radiolocation US360		Private Land Mobile (90)
35.2-35.5 METEOROLOGICAL AIDS RADIOLOCATION 5.549						
35.5-36 METEOROLOGICAL AIDS EARTH EXPLORATION-SATELLITE (active) RADIOLOCATION SPACE RESEARCH (active) 5.549 5.549A			35.5-36 EARTH EXPLORATION-SATELLITE (active) RADIOLOCATION SPACE RESEARCH (active) US360 G117	35.5-36 Earth exploration-satellite (active) Radiolocation Space research (active) US360		
36-37 EARTH EXPLORATION-SATELLITE (passive) FIXED MOBILE SPACE RESEARCH (passive) 5.149 5.550A			36-37 EARTH EXPLORATION-SATELLITE (passive) FIXED MOBILE SPACE RESEARCH (passive) US342 US550A			
37-37.5 FIXED MOBILE except aeronautical mobile SPACE RESEARCH (space-to-Earth) 5.547			37-38 FIXED MOBILE SPACE RESEARCH (space-to-Earth)	37-37.5 FIXED MOBILE US151		Upper Microwave Flexible Use (30)
37.5-38 FIXED FIXED-SATELLITE (space-to-Earth) MOBILE except aeronautical mobile SPACE RESEARCH (space-to-Earth) Earth exploration-satellite (space-to-Earth) 5.547			US151	37.5-38 FIXED FIXED-SATELLITE (space-to-Earth) NG63 MOBILE US151		Satellite Communications (25) Upper Microwave Flexible Use (30)
38-39.5 FIXED FIXED-SATELLITE (space-to-Earth) MOBILE Earth exploration-satellite (space-to-Earth) 5.547			38-38.6 FIXED MOBILE 38.6-39.5	38-39.5 FIXED FIXED-SATELLITE (space-to-Earth) NG63 MOBILE NG175		
39.5-40 FIXED FIXED-SATELLITE (space-to-Earth) 5.516B MOBILE MOBILE-SATELLITE (space-to-Earth) Earth exploration-satellite (space-to-Earth) 5.547			39.5-40 FIXED-SATELLITE (space-to-Earth) MOBILE-SATELLITE (space-to-Earth) US382 G117	39.5-40 FIXED FIXED-SATELLITE (space-to-Earth) NG63 MOBILE NG175 US382		

40-40.5 EARTH EXPLORATION-SATELLITE (Earth-to-space) FIXED FIXED-SATELLITE (space-to-Earth) 5.516B MOBILE MOBILE-SATELLITE (space-to-Earth) SPACE RESEARCH (Earth-to-space) Earth exploration-satellite (space-to-Earth)			40-40.5 EARTH EXPLORATION-SATELLITE (Earth-to-space) FIXED-SATELLITE (space-to-Earth) MOBILE-SATELLITE (space-to-Earth) SPACE RESEARCH (Earth-to-space) Earth exploration-satellite (space-to-Earth) G117	40-40.5 FIXED-SATELLITE (space-to-Earth) MOBILE-SATELLITE (space-to-Earth)	Satellite Communications (25)
40.5-41 FIXED FIXED-SATELLITE (space-to-Earth) BROADCASTING BROADCASTING-SATELLITE Mobile 5.547	40.5-41 FIXED FIXED-SATELLITE (space-to-Earth) 5.516B BROADCASTING BROADCASTING-SATELLITE Mobile Mobile-satellite (space-to-Earth) 5.547	40.5-41 FIXED FIXED-SATELLITE (space-to-Earth) BROADCASTING BROADCASTING-SATELLITE Mobile 5.547	40.5-41 FIXED-SATELLITE (space-to-Earth) Mobile-satellite (space-to-Earth) US211 G117	40.5-41 FIXED-SATELLITE (space-to-Earth) BROADCASTING BROADCASTING-SATELLITE Fixed Mobile Mobile-satellite (space-to-Earth) US211	
41-42.5 FIXED FIXED-SATELLITE (space-to-Earth) 5.516B BROADCASTING BROADCASTING-SATELLITE Mobile 5.547 5.551F 5.551H 5.551I			41-42.5 US211	41-42 FIXED FIXED-SATELLITE (space-to-Earth) MOBILE BROADCASTING BROADCASTING-SATELLITE US211	
				42-42.5 FIXED MOBILE US211	
42.5-43.5 FIXED FIXED-SATELLITE (Earth-to-space) 5.552 MOBILE except aeronautical mobile RADIO ASTRONOMY 5.149 5.547			42.5-43.5 FIXED FIXED-SATELLITE (Earth-to-space) MOBILE except aeronautical mobile RADIO ASTRONOMY US342	42.5-43.5 RADIO ASTRONOMY US342	
43.5-47 MOBILE 5.553 MOBILE-SATELLITE RADIONAVIGATION RADIONAVIGATION-SATELLITE 5.554			43.5-45.5 FIXED-SATELLITE (Earth-to-space) MOBILE-SATELLITE (Earth-to-space) G117	43.5-45.5	
			45.5-46.9 MOBILE MOBILE-SATELLITE (Earth-to-space) RADIONAVIGATION-SATELLITE 5.554		RF Devices (15)

International Table			United States Table		FCC Rule Part(s)
Region 1 Table	Region 2 Table	Region 3 Table	Federal Table	Non-Federal Table	
59-59.3 EARTH EXPLORATION-SATELLITE (passive) FIXED INTER-SATELLITE 5.556A MOBILE 5.558 RADIOLOCATION 5.559 SPACE RESEARCH (passive)			59-59.3 EARTH EXPLORATION-SATELLITE (passive) FIXED INTER-SATELLITE 5.556A MOBILE 5.558 RADIOLOCATION 5.559 SPACE RESEARCH (passive) US353	59-59.3 EARTH EXPLORATION-SATELLITE (passive) FIXED MOBILE 5.558 RADIOLOCATION 5.559 SPACE RESEARCH (passive) US353	RF Devices (15)
59.3-64 FIXED INTER-SATELLITE MOBILE 5.558 RADIOLOCATION 5.559 5.138			59.3-64 FIXED INTER-SATELLITE MOBILE 5.558 RADIOLOCATION 5.559 5.138 US353	59.3-64 FIXED MOBILE 5.558 RADIOLOCATION 5.559 5.138 US353	RF Devices (15) ISM Equipment (18)
64-65 FIXED INTER-SATELLITE MOBILE except aeronautical mobile 5.547 5.556			64-65 FIXED INTER-SATELLITE MOBILE except aeronautical mobile	64-65 FIXED MOBILE except aeronautical mobile	RF Devices (15)
65-66 EARTH EXPLORATION-SATELLITE FIXED INTER-SATELLITE MOBILE except aeronautical mobile SPACE RESEARCH 5.547			65-66 EARTH EXPLORATION-SATELLITE FIXED MOBILE except aeronautical mobile SPACE RESEARCH	65-66 EARTH EXPLORATION-SATELLITE FIXED INTER-SATELLITE MOBILE except aeronautical mobile SPACE RESEARCH	RF Devices (15) Satellite Communications (25)
66-71 INTER-SATELLITE MOBILE 5.553 5.558 MOBILE-SATELLITE RADIONAVIGATION RADIONAVIGATION-SATELLITE 5.554			66-71 MOBILE 5.553 5.558 MOBILE-SATELLITE RADIONAVIGATION RADIONAVIGATION-SATELLITE 5.554	66-71 INTER-SATELLITE MOBILE 5.553 5.558 MOBILE-SATELLITE RADIONAVIGATION RADIONAVIGATION-SATELLITE 5.554	
71-74 FIXED FIXED-SATELLITE (space-to-Earth) MOBILE MOBILE-SATELLITE (space-to-Earth)			71-74 FIXED FIXED-SATELLITE (space-to-Earth) MOBILE MOBILE-SATELLITE (space-to-Earth) US389		Fixed Microwave (101)
74-76 FIXED FIXED-SATELLITE (space-to-Earth) MOBILE BROADCASTING BROADCASTING-SATELLITE Space research (space-to-Earth) 5.561			74-76 FIXED FIXED-SATELLITE (space-to-Earth) MOBILE Space research (space-to-Earth) US389	74-76 FIXED FIXED-SATELLITE (space-to-Earth) MOBILE BROADCASTING BROADCASTING-SATELLITE Space research (space-to-Earth) US389	RF Devices (15) Fixed Microwave (101)

BILLING CODE 6712–01–C

* * * * *

United States (US) Footnotes

* * * * *

US151 In the band 37–38 GHz, stations in the fixed and mobile services shall not cause harmful interference to Federal earth stations in the space research service (space-to-Earth) at the following sites: Goldstone, CA; Socorro, NM; and White Sands, NM. Applications for non-Federal use of this band shall be coordinated with NTIA in accordance with 47 CFR 30.205.

* * * * *

Non-Federal Government (NG) Footnotes

* * * * *

NG63 In the band 37.5–40 GHz, earth station operations in the fixed-satellite service (space-to-Earth) shall not claim protection from stations in the fixed and mobile services, except where individually licensed earth stations are authorized pursuant to 47 CFR 25.136.

* * * * *

■ 8. Section 2.1091 is amended by revising paragraph (c)(1) introductory text to read as follows:

§ 2.1091 Radiofrequency radiation exposure evaluation: mobile devices.

* * * * *

(c)(1) Mobile devices that operate in the Commercial Mobile Radio Services pursuant to part 20 of this chapter; the Cellular Radiotelephone Service pursuant to part 22 of this chapter; the Personal Communications Services pursuant to part 24 of this chapter; the Satellite Communications Services pursuant to part 25 of this chapter; the Miscellaneous Wireless Communications Services pursuant to part 27 of this chapter; the Upper Microwave Flexible Use Service pursuant to part 30 of this chapter; the Maritime Services (ship earth station devices only) pursuant to part 80 of this chapter; the Specialized Mobile Radio Service, and the 3650 MHz Wireless Broadband Service pursuant to part 90 of this chapter; and the Citizens Broadband Radio Service pursuant to part 96 of this chapter are subject to routine environmental evaluation for RF exposure prior to equipment authorization or use if:

* * * * *

■ 9. Section 2.1093 is amended by revising paragraph (c)(1) to read as follows:

§ 2.1093 Radiofrequency radiation exposure evaluation: portable devices.

* * * * *

(c)(1) Portable devices that operate in the Cellular Radiotelephone Service pursuant to part 22 of this chapter; the Personal Communications Service (PCS) pursuant to part 24 of this chapter; the Satellite Communications Services pursuant to part 25 of this chapter; the Miscellaneous Wireless Communications Services pursuant to part 27 of this chapter; the Upper Microwave Flexible Use Service pursuant to part 30 of this chapter; the Maritime Services (ship earth station devices only) pursuant to part 80 of this chapter; the Specialized Mobile Radio Service, the 4.9 GHz Band Service, and the 3650 MHz Wireless Broadband Service pursuant to part 90 of this chapter; the Wireless Medical Telemetry Service (WMTS) and the Medical Device Radiocommunication Service (MedRadio), pursuant to subparts H and I of part 95 of this chapter, respectively, unlicensed personal communication service, unlicensed NII devices and millimeter wave devices authorized under §§ 15.253(f), 15.255(g), 15.257(g), 15.319(i), and 15.407(f) of this chapter; and the Citizens Broadband Radio Service pursuant to part 96 of this chapter are subject to routine environmental evaluation for RF exposure prior to equipment authorization or use.

* * * * *

PART 15—RADIO FREQUENCY DEVICES

■ 10. The authority citation for part 15 continues to read as follows:

Authority: 47 U.S.C. 154, 302a, 303, 304, 307, 336, 544a, and 549.

■ 11. Section 15.255 is amended by revising the section heading, paragraphs (a)(2), (b), and (c)(1); removing paragraph (d); redesignating paragraphs (e) through (h) as paragraphs (d) through (g); revising newly redesignated paragraph (d)(2); and adding new paragraph (h) to read as follows:

§ 15.255 Operation within the band 57–71 GHz.

(a) * * *

(2) Field disturbance sensors, including vehicle radar systems, unless the field disturbance sensors are employed for fixed operation, or used as short-range devices for interactive motion sensing. For the purposes of this section, the reference to fixed operation includes field disturbance sensors installed in fixed equipment, even if the sensor itself moves within the equipment.

(b) Within the 57–71 GHz band, emission levels shall not exceed the following equivalent isotropically radiated power (EIRP):

(1) Products other than fixed field disturbance sensors and short-range devices for interactive motion sensing shall comply with one of the following emission limits, as measured during the transmit interval:

(i) The average power of any emission shall not exceed 40 dBm and the peak power of any emission shall not exceed 43 dBm; or

(ii) For fixed point-to-point transmitters located outdoors, the average power of any emission shall not exceed 82 dBm, and shall be reduced by 2 dB for every dB that the antenna gain is less than 51 dBi. The peak power of any emission shall not exceed 85 dBm, and shall be reduced by 2 dB for every dB that the antenna gain is less than 51 dBi.

(A) The provisions in this paragraph for reducing transmit power based on antenna gain shall not require that the power levels be reduced below the limits specified in paragraph (b)(1)(i) of this section.

(B) The provisions of § 15.204(c)(2) and (4) that permit the use of different antennas of the same type and of equal or less directional gain do not apply to intentional radiator systems operating under this provision. In lieu thereof, intentional radiator systems shall be certified using the specific antenna(s) with which the system will be marketed and operated. Compliance testing shall be performed using the highest gain and the lowest gain antennas for which certification is sought and with the intentional radiator operated at its maximum available output power level. The responsible party, as defined in § 2.909 of this chapter, shall supply a list of acceptable antennas with the application for certification.

(2) For fixed field disturbance sensors that occupy 500 MHz or less of bandwidth and that are contained wholly within the frequency band 61.0–61.5 GHz, the average power of any emission, measured during the transmit interval, shall not exceed 40 dBm, and the peak power of any emission shall not exceed 43 dBm. In addition, the average power of any emission outside of the 61.0–61.5 GHz band, measured during the transmit interval, but still within the 57–71 GHz band, shall not exceed 10 dBm, and the peak power of any emission shall not exceed 13 dBm.

(3) For fixed field disturbance sensors other than those operating under the provisions of paragraph (b)(2) of this section, and short-range devices for interactive motion sensing, the peak transmitter conducted output power

shall not exceed −10 dBm and the peak EIRP level shall not exceed 10 dBm.

(4) The peak power shall be measured with an RF detector that has a detection bandwidth that encompasses the 57–71 GHz band and has a video bandwidth of at least 10 MHz. The average emission levels shall be measured over the actual time period during which transmission occurs.

(c) * * *

(1) The power density of any emissions outside the 57–71 GHz band shall consist solely of spurious emissions.

* * * * *

(d) * * *

(2) Peak transmitter conducted output power shall be measured with an RF detector that has a detection bandwidth that encompasses the 57–71 GHz band and that has a video bandwidth of at least 10 MHz.

* * * * *

(h) Measurement procedures that have been found to be acceptable to the Commission in accordance with § 2.947 of this chapter may be used to demonstrate compliance.

PART 25—SATELLITE COMMUNICATIONS

■ 12. The authority citation for part 25 continues to read as follows:

Authority: Interprets or applies 47 U.S.C. 154, 301, 302, 303, 307, 309, 319, 332, 605, and 721, unless otherwise noted.

■ 13. Add § 25.136 to read as follows:

§ 25.136 Earth Stations in the 27.5–28.35 GHz and 37.5–40 GHz bands.

(a) FSS is secondary to the Upper Microwave Flexible Use Service in the 27.5–28.35 GHz band. Notwithstanding that secondary status, an earth station in the 27.5–28.35 GHz band that meets one of the criteria listed below may operate consistent with the terms of its authorization without providing any additional interference protection to stations in the Upper Microwave Flexible Use Service:

(1) The FSS licensee also holds the relevant Upper Microwave Flexible Use Service license(s) for the area in which the earth station generates a power flux density (PFD), at 10 meters above ground level, of greater than or equal to −77.6 dBm/m²/MHz;

(2) The FSS earth station was authorized prior to July 14, 2016; or

(3) The application for the FSS earth station was filed prior to July 14, 2016 and has been subsequently granted; or

(4) The applicant demonstrates compliance with all of the following criteria in its application:

(i) There are no more than two other authorized earth stations operating in the 27.5–28.35 GHz band within the county where the proposed earth station is located that meet the criteria contained in either paragraphs (a)(1), (2), (3), or (4) of this section. For purposes of this requirement, multiple earth stations that are collocated with or at a location contiguous to each other shall be considered as one earth station;

(ii) The area in which the earth station generates a power flux density (PFD), at 10 meters above ground level, of greater than or equal to −77.6 dBm/m²/MHz, together with the similar area of any other earth station authorized pursuant to paragraph (a) of this section, does not cover, in the aggregate, more than 0.1 percent of the population of the county within which the earth station is located;

(iii) The area in which the earth station generates a power flux density (PFD), at 10 meters above ground level, of greater than or equal to −77.6 dBm/m²/MHz does not contain any major event venue, arterial street, interstate or U.S. highway, urban mass transit route, passenger railroad, or cruise ship port; and

(iv) The applicant has successfully completed frequency coordination with the UMFUS licensees within the area in which the earth station generates a power flux density (PFD), at 10 meters above ground level, of greater than or equal to −77.6 dBm/m²/MHz with respect to existing facilities constructed and in operation by the UMFUS licensee. In coordinating with UMFUS licensees, the applicant shall use the applicable processes contained in § 101.103(d) of this chapter.

(b) Applications for earth stations in the 37.5–40 GHz band shall provide an exhibit describing the zone within which the earth station will require protection from transmissions of Upper Microwave Flexible Use Service licensees. For purposes of this rule, the protection zone shall consist of the area where UMFUS licensees may not locate facilities without the consent of the earth station licensee. The earth station applicant shall demonstrate in its application, using reasonable engineering methods, that the requested protection zone is necessary in order to protect its proposed earth station.

(c) The protection zone (as defined in paragraph (b) of this section) shall comply with the following criteria. The applicant shall demonstrate compliance with all of the following criteria in its application:

(1) There are no more than two other authorized earth stations operating in the 37.5–40 GHz band within the Partial Economic Area within which the proposed earth station is located that meet the criteria contained in paragraph (c) of this section. For purposes of this requirement, multiple earth stations that are collocated with or at a location contiguous to each other shall be considered as one earth station;

(2) The protection zone, together with the protection zone of other earth stations in the same Partial Economic Area authorized pursuant to this section, does not cover, in the aggregate, more than 0.1 percent of the population of the Partial Economic Area within which the earth station is located;

(3) The protection zone does not contain any major event venue, arterial street, interstate or U.S. highway, urban mass transit route, passenger railroad, or cruise ship port; and

(4) The applicant has successfully completed frequency coordination with the UMFUS licensees within the protection zone with respect to existing facilities constructed and in operation by the UMFUS licensee. In coordinating with UMFUS licensees, the applicant shall use the applicable processes contained in § 101.103(d) of this chapter.

(d) If an earth station applicant or licensee in the 27.5–28.35 GHz or 37. 5–40 GHz bands enters into an agreement with an UMFUS licensee, their operations shall be governed by that agreement, except to the extent that the agreement is inconsistent with the Commission's rules or the Communications Act.

■ 14. Section 25.202 is amended by revising footnotes 1 and 7 to the table in paragraph (a)(1) to read as follows:

§ 25.202 Frequencies, frequency tolerance, and emission limits.

(a) * * *

(1) * * *

[1] Use of this band by the Fixed-Satellite Service is limited to individually licensed earth stations. Satellite earth station facilities in this band may not be ubiquitously deployed and may not be used to serve individual consumers.

* * * * *

[7] The Fixed-Satellite Service is secondary to the Upper Microwave Flexible Use Service authorized pursuant to 47 CFR part 30, except for FSS operations associated with earth stations authorized pursuant to 47 CFR 25.136.

* * * * *

■ 15. Part 30 is added to read as follows:

PART 30—UPPER MICROWAVE FLEXIBLE USE SERVICE

Subpart A—General

Sec.
30.1 Creation of upper microwave flexible use service.
30.2 Definitions.
30.3 Eligibility.
30.4 Frequencies.
30.5 Service areas.
30.6 Permissible communications.
30.7 37–37.6 GHz Band—Shared coordinated service.
30.8 5G Provider cybersecurity statement requirements.

Subpart B—Applications and Licenses

30.101 Initial authorizations.
30.102 Transition of existing local multipoint distribution service and 39 GHz licenses.
30.103 License term.
30.104 Construction requirements.
30.105 Geographic partitioning and spectrum disaggregation.
30.106 Discontinuance of service.

Subpart C—Technical Standards

30.201 Equipment authorization.
30.202 Power limits.
30.203 Emission limits.
30.204 Field strength limits.
30.205 Federal coordination requirements.
30.206 International coordination.
30.207 Radio frequency (RF) safety.
30.208 Operability.
30.209 Duplexing.

Subpart D—Competitive Bidding Procedures

30.301 Upper Microwave Flexible Use Service subject to competitive bidding.
30.302 Designated entities and bidding credits.

Subpart E—Special Provisions for Fixed Point-to-Point, Fixed Point-to-Multipoint Hub Stations, and Fixed Point-to-Multipoint User Stations

30.401 Permissible service.
30.402 Frequency tolerance.
30.403 Bandwidth.
30.404 Emission limits.
30.405 Transmitter power limitations.
30.406 Directional antennas.
30.407 Antenna polarization.

Authority: 47 U.S.C. 151, 152, 153, 154, 301, 303, 304, 307, 309, 310, 316, 332, 1302.

Subpart A—General

§ 30.1 Creation of upper microwave flexible use service, scope and authority.

As of December 14, 2016, Local Multipoint Distribution Service licenses for the 27.5–28.35 GHz band, and licenses issued in the 38.6–40 GHz band under part 101 of this chapter shall be reassigned to the Upper Microwave Flexible Use Service. Local Multipoint Distribution Service licenses in bands other than 27.5–28.35 GHz shall remain in that service and shall be governed by the part 101 of this chapter applicable to that service.

§ 30.2 Definitions.

The following definitions apply to this part:

Authorized bandwidth. The maximum width of the band of frequencies permitted to be used by a station. This is normally considered to be the necessary or occupied bandwidth, whichever is greater. (See § 2.202 of this chapter).

Authorized frequency. The frequency, or frequency range, assigned to a station by the Commission and specified in the instrument of authorization.

Fixed satellite earth station. An earth station intended to be used at a specified fixed point.

Local Area Operations. Operations confined to physical facility boundaries, such as a factory.

Point-to-Multipoint Hub Station. A fixed point-to-multipoint radio station that provides one-way or two-way communication with fixed Point-to-Multipoint Service User Stations.

Point-to-Multipoint Service. A fixed point-to-multipoint radio service consisting of point-to-multipoint hub stations that communicate with fixed point-to-multipoint user stations.

Point-to-Multipoint User Station. A fixed radio station located at users' premises, lying within the coverage area of a Point-to-Multipoint Hub station, using a directional antenna to receive one-way communications from or providing two-way communications with a fixed Point-to-Multipoint Hub Station.

Point-to-point station. A station that transmits a highly directional signal from a fixed transmitter location to a fixed receive location.

Portable device. Transmitters designed to be used within 20 centimeters of the body of the user.

Prior coordination. A bilateral process conducted prior to filing applications which includes the distribution of the technical parameters of a proposed radio system to potentially affected parties for their evaluation and timely response.

Secondary operations. Radio communications which may not cause interference to operations authorized on a primary basis and which are not protected from interference from these primary operations

Transportable station. Transmitting equipment that is not intended to be used while in motion, but rather at stationary locations.

Universal Licensing System. The Universal Licensing System (ULS) is the consolidated database, application filing system, and processing system for all Wireless Radio Services. ULS supports electronic filing of all applications and related documents by applicants and licensees in the Wireless Radio Services, and provides public access to licensing information.

§ 30.3 Eligibility.

Any entity who meets the technical, financial, character, and citizenship qualifications that the Commission may require in accordance with such Act, other than those precluded by section 310 of the Communications Act of 1934, as amended, 47 U.S.C. 310, is eligible to hold a license under this part.

§ 30.4 Frequencies.

The following frequencies are available for assignment in the Upper Microwave Flexible Use Service:

(a) 27.5 GHz—28.35 GHz band—27.5–27.925 GHz and 27.925–28.35 GHz.

(b) 38.6–40 GHz band:

(1) New channel plan:

Channel No.	Frequency band limits (MHz)
1	38,600–38,800
2	38,800–39,000
3	39,000–39,200
4	39,200–39,400
5	39,400–39,600
6	39,600–39,800
7	39,800–40,000

(2) Pending transition to the new channel plan, existing 39 GHz licensees licensed under part 101 of this chapter may continue operating on the following channel plan:

Channel group A		Channel group B	
Channel No.	Frequency band limits (MHz)	Channel No.	Frequency band limits (MHz)
1–A	38,600–38,650	1–B	39,300–39,350
2–A	38,650–38,700	2–B	39,350–39,400
3–A	38,700–38,750	3–B	39,400–39,450
4–A	38,750–38,800	4–B	39,450–39,500

Channel group A		Channel group B	
Channel No.	Frequency band limits (MHz)	Channel No.	Frequency band limits (MHz)
5–A	38,800–38,850	5–B	39,500–39,550
6–A	38,850–38,900	6–B	39,550–39,600
7–A	38,900–38,950	7–B	39,600–39,650
8–A	38,950–39,000	8–B	39,650–39,700
9–A	39,000–39,050	9–B	39,700–39,750
10–A	39,050–39,100	10–B	39,750–39,800
11–A	39,100–39,150	11–B	39,800–39,850
12–A	39,150–39,200	12–B	39,850–39,900
13–A	39,200–39,250	13–B	39,900–39,950
14–A	39,250–39,300	14–B	39,950–40,000

(c) 37–38.6 GHz band: 37,600–37,800 MHz; 37,800–38,000 MHz; 38,000–38,200 MHz; 38,200–38,400 MHz, and 38,400–38,600 MHz. The 37,000–37,600 MHz band segment shall be available on a site-specific, coordinated shared basis with eligible Federal entities.

§ 30.5 Service areas.

(a) Except as noted in paragraphs (b) and (c) of this section, and except for the shared 37–37.6 GHz band, the service areas for the Upper Microwave Flexible Use Service are Partial Economic Areas.

(b) For the 27.5–28.35 GHz band, the service areas shall be counties.

(c) Common Carrier Fixed Point-to-Point Microwave Stations licensed in the 38.6–40 GHz bands licensed with Rectangular Service Areas shall maintain their Rectangular Service Area as defined in their authorization. The frequencies associated with Rectangular Service Area authorizations that have expired, cancelled, or otherwise been recovered by the Commission will automatically revert to the applicable county licensee.

(d) In the 37.5–40 GHz band, Upper Microwave Flexible Use Service licensees shall not place facilities within the protection zone of Fixed-Satellite Service earth stations authorized pursuant to § 25.136 of this chapter, absent consent from the Fixed-Satellite Service earth station licensee.

§ 30.6 Permissible communications.

(a) A licensee in the frequency bands specified in § 30.4 may provide any services for which its frequency bands are allocated, as set forth in the non-Federal Government column of the Table of Frequency Allocations in § 2.106 of this chapter (column 5).

(b) Fixed-Satellite Service shall be provided in a manner consistent with part 25 of this chapter.

§ 30.7 37–37.6 GHz Band—Shared coordinated service.

(a) The 37–37.6 GHz band will be available for site-based registrations on a coordinated basis with co-equal eligible Federal entities.

(b) Any non-Federal entity meeting the eligibility requirements of § 30.3 may operate equipment that complies with the technical rules of this part pursuant to a Shared Access License.

(c) Licensees in the 37–37.6 GHz band must register their individual base stations and access points prior to placing them in operation.

§ 30.8 5G Provider cybersecurity statement requirements.

(a) *Statement.* Each Upper Microwave Flexible Use Service licensee is required to submit to the Commission a Statement describing its network security plans and related information, which shall be signed by a senior executive within the licensee's organization with personal knowledge of the security plans and practices within the licensee's organization. The Statement must contain, at a minimum, the following elements:

(1) *Security approach.* A high-level, general description of the licensee's approach designed to safeguard the planned network's confidentiality, integrity, and availability, with respect to communications from:

(i) A device to the licensee's network;

(ii) One element of the licensee's network to another element on the licensee's network;

(iii) The licensee's network to another network; and

(iv) Device to device (with respect to telephone voice and messaging services).

(2) *Cybersecurity coordination.* A high-level, general description of the licensee's anticipated approach to assessing and mitigating cyber risk induced by the presence of multiple participants in the band. This should include the high level approach taken toward ensuring consumer network confidentiality, integrity, and availability security principles, are to be protected in each of the following use cases: communications between a wireless device and the licensee's network; communications within and between each licensee's network; communications between mobile devices that are under end-to-end control of the licensee; and communications between mobile devices that are not under the end-to-end control of the licensee;

(3) *Cybersecurity standards and best practices.* A high-level description of relevant cybersecurity standards and practices to be employed, whether industry-recognized or related to some other identifiable approach;

(4) *Participation with standards bodies, industry-led organizations.* A description of the extent to which the licensee participates with standards bodies or industry-led organizations pursuing the development or maintenance of emerging security standards and/or best practices;

(5) *Other security approaches.* The high-level identification of any other approaches to security, unique to the services and devices the licensee intends to offer and deploy; and

(6) *Plans with Information Sharing and Analysis Organizations.* Plans to incorporate relevant outputs from Information Sharing and Analysis Organizations (ISAOs) as elements of the licensee's security architecture. Plans should include comment on machine-to-machine threat information sharing, and any use of anticipated standards for ISAO-based information sharing.

(b) *Timing.* Each Upper Microwave Flexible Use Service licensee shall submit this *Statement* to the Commission within three years after grant of the license, but no later than six months prior to deployment.

(c) *Definitions.* The following definitions apply to this section:

Availability. The accessibility and usability of a network upon demand.

Confidentiality. The protection of data from unauthorized access and disclosure, both while at rest and in transit.

Integrity. The protection against the unauthorized modification or destruction of information.

Subpart B—Applications and Licenses

§ 30.101 Initial authorizations.

Except with respect to in the 37–37.6 GHz band, an applicant must file a single application for an initial authorization for all markets won and frequency blocks desired. Initial authorizations shall be granted in accordance with § 30.4. Applications for individual sites are not required and will not be accepted, except where required for environmental assessments, in accordance with §§ 1.1301 through 1.1319 of this chapter.

§ 30.102 Transition of existing local multipoint distribution service and 39 GHz licenses.

Local Multipoint Distribution Service licenses in the 27.5—28.35 GHz band issued on a Basic Trading Area basis shall be disaggregated into county-based licenses and 39 GHz licenses issued on an Economic Area basis shall be disaggregated into Partial Economic Area-based licenses on December 14, 2016. For each county in the Basic Trading Area or Partial Economic Area in the Economic Area which is part of the original license, the licensee shall receive a separate license. If there is a co-channel Rectangular Service Area licensee within the service area of a 39 GHz Economic Area licensee, the disaggregated license shall not authorize operation with the service area of the Rectangular Service Area license.

§ 30.103 License term.

Initial authorizations will have a term not to exceed ten years from the date of initial issuance or renewal.

§ 30.104 Construction requirements.

(a) Upper Microwave Flexible Use Service licensees must make a buildout showing as part of their renewal applications. Licensees relying on mobile or point-to-multipoint service must show that they are providing reliable signal coverage and service to at least 40 percent of the population within the service area of the licensee, and that they are using facilities to provide service in that area either to customers or for internal use. Licensees relying on point-to-point service must demonstrate that they have four links operating and providing service, either to customers or for internal use, if the population within the license area is equal to or less than 268,000. If the population within the license area is greater than 268,000, a licensee relying on point-to-point service must demonstrate it has at least one link in operation and is providing service for each 67,000 population within the license area.

(b) Showings that rely on a combination of multiple types of service will be evaluated on a case-by-case basis.

(c) If a licensee in this service is also a Fixed-Satellite Service licensee and uses the spectrum covered under its UMFUS license in connection with a satellite earth station, it can demonstrate compliance with the requirements of this section by demonstrating that the earth station in question is in service, operational, and using the spectrum associated with the license. This provision can only be used to demonstrate compliance for the county in which the earth station is located.

(d) Failure to meet this requirement will result in automatic cancellation of the license. In bands licensed on a Partial Economic Area basis, licensees will have the option of partitioning a license on a county basis in order to reduce the population within the license area to a level where the licensee's buildout would meet one of the applicable performance metrics.

(e) Existing 28 GHz and 39 GHz licensees shall be required to make a showing pursuant to this rule by June 1, 2024.

§ 30.105 Geographic partitioning and spectrum disaggregation.

(a) Parties seeking approval for partitioning and disaggregation shall request from the Commission an authorization for partial assignment of a license pursuant to § 1.948 of this chapter. Upper Microwave Flexible Use Service licensees may apply to partition their licensed geographic service area or disaggregate their licensed spectrum at any time following the grant of their licenses.

(b) *Technical standards*—(1) *Partitioning.* In the case of partitioning, applicants and licensees must file FCC Form 603 pursuant to § 1.948 of this chapter and list the partitioned service area on a schedule to the application. The geographic coordinates must be specified in degrees, minutes, and seconds to the nearest second of latitude and longitude and must be based upon the 1983 North American Datum (NAD83).

(2) Spectrum may be disaggregated in any amount.

(3) The Commission will consider requests for partial assignment of licenses that propose combinations of partitioning and disaggregation.

(4) For purposes of partitioning and disaggregation, part 30 systems must be designed so as not to exceed the signal level specified for the particular spectrum block in § 30.204 at the licensee's service area boundary, unless the affected adjacent service area licensees have agreed to a different signal level.

(c) *License term.* The license term for a partitioned license area and for disaggregated spectrum shall be the remainder of the original licensee's license term as provided for in § 30.103.

(d)(1) Parties to partitioning agreements must satisfy the construction requirements set forth in § 30.104 by the partitioner and partitionee each certifying that it will independently meet the construction requirement for its respective partitioned license area. If the partitioner or partitionee fails to meet the construction requirement for its respective partitioned license area, then the relevant partitioned license will automatically cancel.

(2) Parties to disaggregation agreements must satisfy the construction requirements set forth in § 30.104 by the disaggregator and disaggregatee each certifying that it will independently meet the construction requirement for its respective disaggregated license area. If the disaggregator or disaggregatee fails to meet the construction requirement for its respective disaggregated license area, then the relevant disaggregated license will automatically cancel.

§ 30.106 Discontinuance of service.

(a) An Upper Microwave Flexible Use License authorization will automatically terminate, without specific Commission action, if the licensee permanently discontinues service after the initial license term.

(b) For licensees with common carrier regulatory status, permanent discontinuance of service is defined as 180 consecutive days during which a licensee does not provide service to at least one subscriber that is not affiliated with, controlled by, or related to the licensee in the individual license area. For licensees with non-common carrier status, permanent discontinuance of service is defined as 180 consecutive days during which a licensee does not operate.

(c) A licensee that permanently discontinues service as defined in this section must notify the Commission of the discontinuance within 10 days by filing FCC Form 601 or 605 requesting license cancellation. An authorization will automatically terminate, without specific Commission action, if service is permanently discontinued as defined in this section, even if a licensee fails to

file the required form requesting license cancellation.

Subpart C—Technical Standards

§ 30.201 Equipment authorization.

(a) Except as provided under paragraph (c) of this section, each transmitter utilized for operation under this part must be of a type that has been authorized by the Commission under its certification procedure.

(b) Any manufacturer of radio transmitting equipment to be used in these services may request equipment authorization following the procedures set forth in subpart J of part 2 of this chapter. Equipment authorization for an individual transmitter may be requested by an applicant for a station authorization by following the procedures set forth in part 2 of this chapter.

(c) Unless specified otherwise, transmitters for use under the provisions of subpart E of this part for fixed point-to-point microwave and point-to-multipoint services must be a type that has been verified for compliance.

§ 30.202 Power limits.

(a) For fixed and base stations operating in connection with mobile systems, the average power of the sum of all antenna elements is limited to an equivalent isotopically radiated power (EIRP) density of +75dBm/100 MHz. For channel bandwidths less than 100 megahertz the EIRP must be reduced proportionally and linearly based on the bandwidth relative to 100 megahertz.

(b) For mobile stations, the average power of the sum of all antenna elements is limited to a maximum EIRP of +43 dBm.

(c) For transportable stations, as defined in § 30.2, the average power of the sum of all antenna elements is limited to a maximum EIRP of +55 dBm.

(d) For fixed point-to-point and point-to-multipoint limits see § 30.405.

§ 30.203 Emission limits.

(a) The conductive power or the total radiated power of any emission outside a licensee's frequency block shall be −13 dBm/MHz or lower. However, in the bands immediately outside and adjacent to the licensee's frequency block, having a bandwidth equal to 10 percent of the channel bandwidth, the conductive power or the total radiated power of any emission shall be −5 dBm/MHz or lower.

(b)(1) Compliance with this provision is based on the use of measurement instrumentation employing a resolution bandwidth of 1 megahertz or greater.

(2) When measuring the emission limits, the nominal carrier frequency shall be adjusted as close to the licensee's frequency block edges as the design permits.

(3) The measurements of emission power can be expressed in peak or average values.

(c) For fixed point-to-point and point-to-multipoint limits see § 30.404.

§ 30.204 Field strength limits.

(a) *Base/mobile operations:* The predicted or measured Power Flux Density (PFD) from any Base Station operating in the 27.5–28.35 GHz band, 37–38.6 GHz band, and 38.6–40 GHz bands at any location on the geographical border of a licensee's service area shall not exceed −76dBm/m²/MHz (measured at 1.5 meters above ground) unless the adjacent affected service area licensee(s) agree(s) to a different PFD.

(b) *Fixed point-to-point operations.* (1) Prior to operating a fixed point-to-point transmitting facility in the 27,500–28,350 MHz band where the facilities are located within 20 kilometers of the boundary of the licensees authorized market area, the licensee must complete frequency coordination in accordance with the procedures specified in § 101.103(d)(2) of this chapter with respect to neighboring licensees that may be affected by its operations.

(2) Prior to operating a fixed point-to-point transmitting facility in the 37,000–40,000 MHz band where the facilities are located within 16 kilometers of the boundary of the licensees authorized market area, the licensee must complete frequency coordination in accordance with the procedures specified in § 101.103(d)(2) of this chapter with respect to neighboring licensees that may be affected by its operations.

§ 30.205 Federal coordination requirements.

(a) Licensees in the 37–38 GHz band located within the zones defined by the coordinates in the tables below must coordinate their operations with Federal Space Research Service (space to Earth) users of the band via the National Telecommunications and Information Administration (NTIA). All licensees operating within the zone defined by the 60 dBm/100 MHz EIRP coordinates in the tables below must coordinate all operations. Licensees operating within the area between the zones defined by the 60 dBm and 75 dBm/100 MHz EIRP coordinates in the tables below must coordinate all operations if their base station EIRP is greater than 60 dBm/100 MHz or if their antenna height exceeds 100 meters above ground level. Licensees operating outside the zones defined by the 75 dBm/100 MHz EIRP coordinates in the tables below are not required to coordinate their operations with NTIA.

TABLE 1 TO PARAGRAPH (a): GOLDSTONE, CALIFORNIA COORDINATION ZONE

60 dBm/100 MHz EIRP		75 dBm/100 MHz EIRP	
Latitude/Longitude (decimal degrees)	Latitude/Longitude (decimal degrees)	Latitude/Longitude (decimal degrees)	Latitude/Longitude (decimal degrees)
34.69217/−115.6491	34.19524/−117.47963	34.69217/−115.6491	34.19524/−117.47963
35.25746/−115.32041	34.24586/−117.36210	35.25746/−115.32041	34.24586/−117.36210
36.21257/−117.06567	35.04648/−117.03781	36.11221/−116.63632	34.21748/−117.12812
36.55967/−117.63691	35.04788/−117.00949	36.54731/−117.48242	34.20370/−116.97024
36.66297/−118.31017	34.22940/−117.22327	36.73049/−118.33683	34.12196/−116.93109
36.06074/−118.38528	34.20370/−116.97024	36.39126/−118.47307	34.09498/−116.75473
35.47015/−118.39008	34.12196/−116.93109	36.36891/−118.47134	34.13603/−116.64002
35.40865/−118.34353	34.09498/−116.75473	35.47015/−118.39008	34.69217/−115.6591
35.35986/−117.24709	34.19642/−116.72901	35.40865/−118.34353	34.69217/−115.6491
35.29539/−117.21102	34.64906/−116.62741	35.32048/−117.26386	
34.67607/−118.55412	34.44404/−116.31486	34.63725/−118.96736	
34.61532/−118.36919	34.52736/−116.27845	34.55789/−118.36204	
34.91551/−117.70371	34.76685/−116.27930	34.51108/−118.15329	
34.81257/−117.65400	34.69217/−115.6591	34.39220/−118.28852	
34.37411/−118.18385	34.69217/−115.6491	34.38546/−118.27460	

TABLE 1 TO PARAGRAPH (a): GOLDSTONE, CALIFORNIA COORDINATION ZONE—Continued

60 dBm/100 MHz EIRP		75 dBm/100 MHz EIRP	
Latitude/Longitude (decimal degrees)	Latitude/Longitude (decimal degrees)	Latitude/Longitude (decimal degrees)	Latitude/Longitude (decimal degrees)
34.33405/−117.94189		34.37524/−118.24191	
34.27249/−117.65445		34.37039/−118.22557	

TABLE 2 TO PARAGRAPH (a): SOCORRO, NEW MEXICO COORDINATION ZONE

60 dBm/100 MHz EIRP		75 dBm/100 MHz EIRP
Latitude/Longitude (decimal degrees)	Latitude/Longitude (decimal degrees)	Latitude/Longitude (decimal degrees)
34.83816/−107.66828	33.44401/−108.67876	33.10651/−108.19320
34.80070/−107.68759	33.57963/−107.79895	33.11780/−107.99980
34.56506/−107.70233	33.84552/−107.60207	33.13558/−107.85611
34.40826/−107.71489	33.85964/−107.51915	33.80383/−107.16520
34.31013/−107.88349	33.86479/−107.17223	33.94554/−107.15516
34.24067/−107.96059	33.94779/−107.15038	33.95665/−107.15480
34.10278/−108.23166	34.11122/−107.18132	34.08156/−107.18137
34.07442/−108.30646	34.15203/−107.39035	34.10646/−107.18938
34.01447/−108.31694	34.29643/−107.51071	35.24269/−107.67969
33.86740/−108.48706	34.83816/−107.66828	34.06647/−108.70438
33.81660/−108.51052	33.35946/−108.68902	
33.67909/−108.58750	33.29430/−108.65004	
33.50223/−108.65470	33.10651/−108.19320	

TABLE 3 TO PARAGRAPH (a): WHITE SANDS, NEW MEXICO COORDINATION ZONE

60 dBm/100 MHz EIRP		75 dBm/100 MHz EIRP	
Latitude/Longitude (decimal degrees)	Latitude/Longitude (decimal degrees)	Latitude/Longitude (decimal degrees)	Latitude/Longitude (decimal degrees)
33.98689/−107.15967	31.78455/−106.54058	31.7494/−106.49132	32.88382/−108.16588
33.91573/−107.46301	32.24710/−106.56114	32.24524/−106.56507	32.76255/−108.05679
33.73122/−107.73585	32.67731/−106.53681	32.67731/−106.53681	32.56863/−108.43999
33.37098/−107.84333	32.89856/−106.56882	32.89856/−106.56882	32.48991/−108.50032
33.25424/−107.86409	33.24323/−106.70094	33.04880/−106.62309	32.39142/−108.48959
33.19808/−107.89673	33.98689/−107.15967	33.21824/−106.68992	31.63664/−108.40480
33.02128/−107.87226	33.24347/−106.70165	31.63466/−108.20921	
32.47747/−107.77963	34.00708/−107.08652	31.78374/−108.20798	
32.31543/−108.16101	34.04967/−107.17524	31.78322/−106.52825	
31.79429/−107.88616	33.83491/−107.85971	31.7494/−106.49132	

(b) Licensees in the 37–38.6 GHz band located within the zones defined by the coordinates in the table below must coordinate their operations with the Department of Defense via the National Telecommunications and Information Administration (NTIA).

TABLE TO PARAGRAPH (b)—COORDINATION AREAS FOR FEDERAL TERRESTRIAL SYSTEMS

Location	Agency	Coordination area (decimal degrees)
China Lake, CA	Navy	30 kilometer radius centered on latitude 35.59527 and longitude −117.22583.
		30 kilometer radius centered on latitude 35.52222 and longitude −117.30333.
		30 kilometer radius centered on latitude 35.76222 and longitude −117.60055.
		30 kilometer radius centered on latitude 35.69111 and longitude −117.66916.
San Diego, CA	Navy	30 kilometer radius centered on latitude 32.68333 and longitude −117.23333.
Nanakuli, HI	Navy	30 kilometer radius centered on latitude 21.38333 and longitude −158.13333.
Fishers Island, NY	Navy	30 kilometer radius centered on latitude 41.25 and longitude −72.01666.
Saint Croix, VI	Navy	30 kilometer radius centered on latitude 17.74722 and longitude −64.88.
Fort Irwin, CA	Army	30 kilometer radius centered on latitude 35.26666 and longitude −116.68333.
Fort Carson, CO	Army	30 kilometer radius centered on latitude 38.71666 and longitude −104.65.
Fort Hood, TX	Army	30 kilometer radius centered on latitude 31.11666 and longitude −97.76666.
Fort Bliss, TX	Army	30 kilometer radius centered on latitude 31.8075 and longitude −106.42166.
Yuma Proving Ground, AZ	Army	30 kilometer radius centered on latitude 32.48333 and longitude −114.33333.
Fort Huachuca, AZ	Army	30 kilometer radius centered on latitude 31.55 and longitude −110.35.
White Sands Missile Range, NM	Army	30 kilometer radius centered on latitude 33.35 and longitude −106.3.

TABLE TO PARAGRAPH (b)—COORDINATION AREAS FOR FEDERAL TERRESTRIAL SYSTEMS—Continued

Location	Agency	Coordination area (decimal degrees)
Moody Air Force Base, GA	Air Force	30 kilometer radius centered on latitude 30.96694 and longitude −83.185.
Hurlburt Air Force Base, FL	Air Force	30 kilometer radius centered on latitude 30.42388 and longitude −86.70694.

§ 30.206 International coordination.

Operations in the 27.5–28.35 GHz, 37–38.6, and 38.6–40 GHz bands are subject to existing and future international agreements with Canada and Mexico.

§ 30.207 Radio frequency (RF) safety.

Licensees and manufacturers are subject to the radio frequency radiation exposure requirements specified in §§ 1.1307(b), 1.1310, 2.1091, and 2.1093 of this chapter, as appropriate. Applications for equipment authorization of mobile or portable devices operating under this section must contain a statement confirming compliance with these requirements. Technical information showing the basis for this statement must be submitted to the Commission upon request.

§ 30.208 Operability.

Mobile and transportable stations that operate on any portion of frequencies within the 27.5–28.35 GHz or the 37–40 GHz bands must be capable of operating on all frequencies within those particular bands.

§ 30.209 Duplexing.

Stations authorized under this rule part may employ frequency division duplexing, time division duplexing, or any other duplexing scheme, provided that they comply with the other technical and operational requirements specified in this part.

Subpart D—Competitive Bidding Procedures

§ 30.301 Upper Microwave Flexible Use Service subject to competitive bidding.

Mutually exclusive initial applications for Upper Microwave Flexible User Service licenses are subject to competitive bidding. The general competitive bidding procedures set forth in part 1, subpart Q of this chapter will apply unless otherwise provided in this subpart.

§ 30.302 Designated entities and bidding credits.

(a) *Eligibility for small business provisions.* (1) A small business is an entity that, together with its affiliates, its controlling interests and the affiliates of its controlling interests, have average gross revenues that are not more than $55 million for the preceding three (3) years.

(2) A very small business is an entity that, together with its affiliates, its controlling interests and the affiliates of its controlling interests, has average gross revenues that are not more than $20 million for the preceding three (3) years.

(b) *Bidding credits.* A winning bidder that qualifies as a small business, as defined in this section, or a consortium of small businesses may use a bidding credit of 15 percent, as specified in § 1.2110(f)(2)(i)(C) of this chapter. A winning bidder that qualifies as a very small business, as defined in this section, or a consortium of very small businesses may use a bidding credit of 25 percent, as specified in § 1.2110(f)(2)(i)(B) of this chapter.

(c) A rural service provider, as defined in § 1.2110(f)(4) of this chapter, who has not claimed a small business bidding credit may use a bidding credit of 15 percent bidding credit, as specified in § 1.2110(f)(4)(i) of this chapter.

Subpart E—Special Provisions for Fixed Point-to-Point, Fixed Point-to-Multipoint Hub Stations, and Fixed Point-to-Multipoint User Stations

§ 30.401 Permissible service.

Stations authorized under this subpart may deploy stations used solely as fixed point-to-point stations, fixed point-to-multipoint hub stations, or fixed point-to-multipoint user stations, as defined in § 30.2, subject to the technical and operational requirements specified in this subpart.

§ 30.402 Frequency tolerance.

The carrier frequency of each transmitter authorized under this subpart must be maintained within the following percentage of the reference frequency (unless otherwise specified in the instrument of station authorization the reference frequency will be deemed to be the assigned frequency):

Frequency (MHz)	Frequency tolerance (percent)
27,500 to 28,350	0.001
38,600 to 40,000	0.03

§ 30.403 Bandwidth.

(a) Stations under this subpart will be authorized any type of emission, method of modulation, and transmission characteristic, consistent with efficient use of the spectrum and good engineering practice.

(b) The maximum bandwidth authorized per frequency to stations under this subpart is set out in the table that follows.

Frequency band (MHz)	Maximum authorized bandwidth
27,500 to 28,350	850 MHz.
38,600 to 40,000	200 MHz.[1]

[1] For channel block assignments in the 38,600–40,000 MHz bands when adjacent channels are aggregated, equipment is permitted to operate over the full channel block aggregation without restriction.

§ 30.404 Emission limits.

(a) The mean power of emissions must be attenuated below the mean output power of the transmitter in accordance with the following schedule:

(1) When using transmissions other than those employing digital modulation techniques:

(i) On any frequency removed from the assigned frequency by more than 50 percent up to and including 100 percent of the authorized bandwidth: At least 25 decibels;

(ii) On any frequency removed from the assigned frequency by more than 100 percent up to and including 250 percent of the authorized bandwidth: At least 35 decibels;

(iii) On any frequency removed from the assigned frequency by more than 250 percent of the authorized bandwidth: At least $43 + 10 \text{ Log}_{10}$ (mean output power in watts) decibels, or 80 decibels, whichever is the lesser attenuation.

(2) When using transmissions employing digital modulation techniques in situations not covered in this section:

(i) In any 1 MHz band, the center frequency of which is removed from the assigned frequency by more than 50 percent up to and including 250 percent of the authorized bandwidth: As specified by the following equation but in no event less than 11 decibels:

$A = 11 + 0.4(P - 50) + 10 \text{ Log}_{10} B$.
(Attenuation greater than 56 decibels or to an absolute power of less than −13 dBm/1MHz is not required.)

(ii) In any 1 MHz band, the center frequency of which is removed from the assigned frequency by more than 250 percent of the authorized bandwidth: At least 43 + 10 Log_{10} (the mean output power in watts) decibels, or 80 decibels, whichever is the lesser attenuation. The authorized bandwidth includes the nominal radio frequency bandwidth of an individual transmitter/modulator in block-assigned bands. Equipment licensed prior to April 1, 2005 shall only be required to meet this standard in any 4 kHz band.

(iii) The emission mask in paragraph (a)(2)(i) of this section applies only to the band edge of each block of spectrum, but not to subchannels established by licensees. The value of P in the equation is the percentage removed from the carrier frequency and assumes that the carrier frequency is the center of the actual bandwidth used. The emission mask can be satisfied by locating a carrier of the subchannel sufficiently far from the channel edges so that the emission levels of the mask are satisfied. The emission mask shall use a value B (bandwidth) of 40 MHz, for all cases even in the case where a narrower subchannel is used (for instance the actual bandwidth is 10 MHz) and the mean output power used in the calculation is the sum of the output power of a fully populated channel. For block assigned channels, the out-of-band emission limits apply only outside the assigned band of operation and not within the band.

(b) [Reserved]

§ 30.405 Transmitter power limitations.

On any authorized frequency, the average power delivered to an antenna in this service must be the minimum amount of power necessary to carry out the communications desired. Application of this principle includes, but is not to be limited to, requiring a licensee who replaces one or more of its antennas with larger antennas to reduce its antenna input power by an amount appropriate to compensate for the increased primary lobe gain of the replacement antenna(s). In no event shall the average equivalent isotropically radiated power (EIRP), as referenced to an isotropic radiator, exceed the following:

MAXIMUM ALLOWABLE EIRP

Frequency band (MHz)	Fixed (dBW)
27,500–28,350[1]	+ 55
38,600–40,000	+ 55

[1] For Point-to-multipoint user stations authorized in these bands, the EIRP shall not exceed 55 dBw or 42 dBw/MHz.

§ 30.406 Directional antennas.

(a) Unless otherwise authorized upon specific request by the applicant, each station authorized under the rules of this subpart must employ a directional antenna adjusted with the center of the major lobe of radiation in the horizontal plane directed toward the receiving station with which it communicates: *provided, however,* where a station communicates with more than one point, a multi- or omni-directional antenna may be authorized if necessary.

(b) Fixed stations (other than temporary fixed stations) must employ transmitting and receiving antennas (excluding second receiving antennas for operations such as space diversity) meeting the appropriate performance Standard A indicated in the table to this section, except that in areas not subject to frequency congestion, antennas meeting performance Standard B may be used. For frequencies with a Standard B1 and a Standard B2, in order to comply with Standard B an antenna must fully meet either Standard B1 or Standard B2. Licensees shall comply with the antenna standards table shown in this paragraph in the following manner:

(1) With either the maximum beamwidth to 3 dB points requirement or with the minimum antenna gain requirement; and

(2) With the minimum radiation suppression to angle requirement.

Frequency (MHz)	Category	Maximum beamwidth to 3 dB points[1] (included angle in degrees)	Minimum antenna gain (dbi)	Minimum radiation suppression to angle in degrees from centerline of main beam in decibels						
				5° to 10°	10° to 15°	15° to 20°	20° to 30°	30° to 100°	100° to 140°	140° to 180°
38,600 to 40,000[2]	A	n/a	38	25	29	33	36	42	55	55
	B	n/a	38	20	24	28	32	35	36	36

[1] If a licensee chooses to show compliance using maximum beamwidth to 3 dB points, the beamwidth limit shall apply in both the azimuth and the elevation planes.
[2] Stations authorized to operate in the 38,600–40,000 MHz band may use antennas other than those meeting the Category A standard. However, the Commission may require the use of higher performance antennas where interference problems can be resolved by the use of such antennas.

§ 30.407 Antenna polarization.

In the 27,500–28,350 MHz band, system operators are permitted to use any polarization within its service area, but only vertical and/or horizontal polarization for antennas located within 20 kilometers of the outermost edge of their service area.

PART 101—FIXED MICROWAVE SERVICES

■ 16. The authority citation for part 101 continues to read as follows:

Authority: 47 U.S.C. 154, 303.

§ 101.17 [Removed and Reserved]

■ 17. Remove and reserve § 101.17.

§ 101.56 [Removed and Reserved]

■ 18. Remove and reserve § 101.56.

■ 19. Section 101.63 is amended by revising paragraph (a) to read as follows:

§ 101.63 Period of construction; certification of completion of construction.

(a) Each Station, except in Multichannel Video Distribution and Data Service, Local Multipoint Distribution Service, and the 24 GHz Service, authorized under this part must be in operation within 18 months from the initial date of grant.

* * * * *

§ 101.101 [Amended]

■ 20. Section 101.101, the table, is amended by removing the entries ''27,500–28,350'' and ''38,600–40,000.''

■ 21. Section 101.103 is amended by revising paragraph (g)(1) and by removing paragraph (i) as follows:

§ 101.103 Frequency coordination procedures.

* * * * *

(g) * * *

(1) When the transmitting facilities in a Basic Trading Area (BTA) are to be operated in the bands 29,100–29,250 MHz and 31,000–31,300 MHz and the facilities are located within 20 kilometers of the boundaries of a BTA, each licensee must complete the frequency coordination process of

paragraph (d)(2) of this section with respect to neighboring BTA licensees that may be affected by its operations prior to initiating service. In addition, all licensed transmitting facilities operating in the bands 31,000–31,075 MHz and 31,225–31,300 MHz and located within 20 kilometers of neighboring facilities must complete the frequency coordination process of paragraph (d)(2) of this section with respect to such authorized operations before initiating service.

* * * * *

§ 101.107 [Amended]

■ 22. Section 101.107 is amended by removing the entry ''27,500 to 28,350'' from the table following paragraph (a).

■ 23. Section 101.109 is amended by removing the entries ''27,500 to 28,350'' and ''38,600 to 40,000'' in the table following paragraph (c) and revising footnote 7 to the table.

The revision reads as follows:

§ 101.109 Bandwidth.

* * * * *

(c) * * *

[7] For channel block assignments in the 24,250–25,250 MHz band, the authorized bandwidth is equivalent to an unpaired channel block assignment or to either half of a symmetrical paired channel block assignment. When adjacent channels are aggregated, equipment is permitted to operate over the full channel block aggregation without restriction.

* * * * *

§ 101.113 [Amended]

■ 24. Section 101.113 is amended by removing the entries ''27,500–28,350'' and ''38,600 to 40,000'' in the table following paragraph (a).

§ 101.115 [Amended]

■ 25. Section 101.115 is amended by removing the entry ''38,600 to 40,000'' in the table following paragraph (b)(2), removing footnote 14, and redesignating footnote 15 as footnote 14.

■ 26. Section 101.147 is amended by revising the portion of paragraph (a) preceding the Notes, revising paragraph (t), and removing and reserving paragraph (v).

The revisions read as follows:

§ 101.147 Frequency assignments.

(a) Frequencies in the following bands are available for assignment for fixed microwave services.

928.0–929.0 MHz (28)
932.0–932.5 MHz (27)
932.5–935 MHz (17)
941.0–941.5 MHz (27)
941.5–944 MHz (17) (18)
952.0–960.0 MHz (28)
1,850–1,990 MHz (20) (22)
2,110–2,130 MHz) (1) (3) (7) (20) (23)
2,130–2,150 MHz (20) (22)
2,160–2,180 MHz (1) (2) (20) (23)
2,180–2,200 MHz (20) (22)
2,450–2,500 MHz (12)
2,650–2,690 MHz
3,700–4,200 MHz (8) (14) (25)
5,925–6,425 MHz (6) (14) (25)
6,425–6,525 MHz (24)
6,525–6.875 MHz (14) (33)
6,875–7,125 MHz (10), (34)
10,550–10,680 MHz (19)
10,700–11,700 MHz (8) (9) (19) (25)
11,700–12,200 MHz (24)
12,200–12,700 MHz (31)
12,700–13,200 (22), (34)
13,200–13,250 MHz (4) (24) (25)
14,200–14,400 MHz (24)
17,700–18,820 MHz (5) (10) (15)
17,700–18,300 MHz (10) (15)
18,820–18,920 MHz (22)
18,300–18,580 MHz (5) (10) (15)
18,580–19,300 MHz (22) (30)
18,920–19,160 MHz (5 (10) (15)
19,160–19,260 MHz (22)
19,260–19,700 MHz (5) (10) (15)
19,300–19,700 MHz (5) (10) (15)
21,200–22,000 MHz (4) (11) (12) (13) (24) (25) (26)
22,000–23,600 MHz (4) (11) (12) (24) (25) (26)
24,250–25,250 MHz
29,100–29,250 MHz (5), (16)
31,000–31,300 MHz (16)
42,000–42,500 MHz
71,000–76,000 MHz (5) (17)
81,000–86,000 MHz (5) (17)
92,000–94,000 MHz (17)
94,100–95,000 MHz (17)

* * * * *

(t) *29,100–29,250; 31,000–31,300 MHz.* These frequencies are available for LMDS systems. Each assignment will be made on a BTA service area basis, and the assigned spectrum may be subdivided as desired by the licensee.

* * * * *

§ 101.149 [Removed and Reserved]

■ 27. Remove and reserve § 101.149.

■ 28. Section 101.1005 is amended by revising paragraphs (a) and (b) to read as follows:

§ 101.1005 Frequencies available.

(a) The following frequencies are available for assignment to LMDS in two license blocks:

Block A of 300 MHz
29,100–29,250 MHz
31,075–31,225 MHz
Block B of 150 MHz
31,000–31,075 MHz
31,225–31,300 MHz

(b) In Block A licenses, the frequencies are authorized as follows:

(1) 29,100–29,250 MHz is shared on a co-primary basis with feeder links for non-geostationary orbit Mobile Satellite Service (NGSO/MSS) systems in the band and is limited to LMDS hub-to-subscriber transmissions, as provided in §§ 25.257 and 101.103(h) of this chapter.

(2) 31,075–31,225 MHz is authorized on a primary protected basis and is shared with private microwave point-to-point systems licensed prior to March 11, 1997, as provided in § 101.103(b).

* * * * *

Subpart N—[Removed and Reserved]

■ 29. Remove and reserve subpart N, consisting of §§ 101.1201 through 101.1209.

[FR Doc. 2016–25765 Filed 11–10–16; 8:45 am]

BILLING CODE 6712–01–P

FEDERAL REGISTER

Vol. 81 Monday,

No. 219 November 14, 2016

Part IV

Department of the Interior

Fish and Wildlife Service

50 CFR Parts 28 and 29

Management of Non-Federal Oil and Gas Rights; Final Rule

DEPARTMENT OF THE INTERIOR

Fish and Wildlife Service

50 CFR Parts 28 and 29

[Docket No. FWS–HQ–NWRS–2012–0086; FXRS12610900000–156–FF09R24000]

RIN 1018–AX36

Management of Non-Federal Oil and Gas Rights

AGENCY: Fish and Wildlife Service, Interior.

ACTION: Final rule.

SUMMARY: We, the U.S. Fish and Wildlife Service (Service), are finalizing regulations governing the exercise of non-Federal oil and gas rights outside of Alaska in order to improve our ability to protect refuge resources, visitors, and the general public's health and safety from potential impacts associated with non-Federal oil and gas operations located within refuges. The exercise of non-Federal oil and gas rights refers to oil and gas activities associated with any private, State, or tribally owned mineral interest where the surface estate above such rights is administered by the Service as part of the Refuge System. The existing non-Federal oil and gas regulations have remained unchanged for more than 50 years and provide only vague guidance to staff and operators. This rule will make the regulations more consistent with existing laws, policies, and industry practices. It is designed to provide regulatory clarity and guidance to oil and gas operators and refuge staff, provide a simple process for compliance, incorporate technological improvements in exploration and drilling technology, and ensure that non-Federal oil and gas operations are conducted in a manner that avoids or minimizes impacts to refuge resources.

DATES: This rule is effective December 14, 2016.

ADDRESSES: Supplementary documents prepared in conjunction with preparation of this rule, including an economic analysis and an environmental impact statement, and the public comments received on the proposed rule are available at *www.regulations.gov* at Docket No. FWS–HQ–NWRS–2012–0086.

FOR FURTHER INFORMATION CONTACT: Scott Covington, U.S. Fish and Wildlife Service, Division of Natural Resources and Planning, MS: NWRS, 5275 Leesburg Pike, Falls Church, VA 22041; telephone 703–358–2427.

SUPPLEMENTARY INFORMATION:

Executive Summary

This rule revises the existing regulations at subpart C, part 29, of title 50 of the Code of Federal Regulations (CFR) and adds new regulations at subpart D of 50 CFR part 29 to govern the exercise of non-Federal oil and gas rights within refuges outside of Alaska. This revision improves the effectiveness of the Service to protect refuge resources and uses from avoidable, unnecessary impacts by non-Federal oil and gas operations. It will also bring consistency and clarity for both operators and the Service as to the process by which operators may access non-Federal oil and gas on the National Wildlife Refuge System (NWRS). The Service defines the National Wildlife Refuge System to consist of all lands, waters, and interests therein that it administers (25 CFR 25.12) and does not apply its regulations to the non-Federal lands found within refuge boundaries (*i.e.,* inholdings).

The Service promulgated the current regulations at 50 CFR 29.32 to govern the exercise of non-Federal mineral rights on the NWRS more than 50 years ago, and they have not been updated since. The current regulations outline a general policy to minimize impacts to refuge resources to the extent practicable from all activities associated with non-Federal mineral exploration and development where access is on, across, or through federally owned or controlled lands or waters of the NWRS. However, they have been ineffective at protecting refuge resources because they do not provide operators or refuge staff with an explicit process or requirements for operating on refuge lands, resulting in inconsistency in protections for refuge resources and uses.

Therefore, updating these regulations is a necessary exercise of the Service's authority to ensure that we are meeting our responsibilities under the National Wildlife Refuge System Administration Act (NWRSAA), as amended by the National Wildlife Refuge System Improvement Act (NWRSIA) (16 U.S.C. 668dd *et seq.*), to protect refuge resources and uses while ensuring that mineral rights holders have reasonable access to develop their non-Federal oil and gas.

Key components of the rule include:

- A permitting process for new operations;
- A permitting process for well-plugging and reclamation for all operations;
- Information requirements for particular types of operations;
- Operating standards so that both the Service and the operator can readily identify what standards apply to particular operations;
- Fees for new access beyond that held as part of the operator's oil and gas right;
- Financial assurance (bonding);
- Penalty provisions;
- Exemption of refuges in Alaska from these requirements;
- Codification of some existing Service policies and practices.

Background

Advance Notice of Proposed Rulemaking, Proposed Rule, and Public Comment Period

This rulemaking effort began on February 24, 2014, when we issued an advance notice of proposed rulemaking (ANPR) (79 FR 10080) to assist us in developing the proposed rule. The ANPR had a 60-day comment period, ending April 25, 2014. On June 9, 2014, we reopened the comment period for another 30 days, ending July 9, 2014 (79 FR 32903). We received comments from unaffiliated private citizens (36), conservation organizations (14), State agencies (8), counties (2), Alaska Native Corporations (2), a tribal agency, oil and gas owners and operators (6), business associations (5), and a Federal agency, along with almost 80,000 form letter comments from members of two environmental organizations. The majority of commenters were in favor of strengthening and expanding the regulations to better protect refuge resources and values. Some commenters requested that we not revise the existing regulations, while others questioned whether the Service had the statutory authority to regulate non-Federal oil and gas operations on refuges.

We utilized these comments to prepare the proposed rule, which we published on December 11, 2015 (80 FR 77200), and opened, with the associated draft Environmental Impact Statement (EIS), a 60-day comment period. During this comment period we received approximately 39,600 responses (mostly form letters) indicating general support regulating oil and gas activities on refuges and our proposed rule. However, many commented that the proposed rule did not go far enough in regulating these activities, with some requesting a ban on any oil and gas activity, or at least hydraulic fracturing, in refuges. We also received 12 letters from State agencies, oil and gas associations, oil companies, and an individual opposing the rulemaking. Primary reasons for opposition are that these entities believe that the Service lacks authority to regulate private oil and gas and existing State and Federal regulations are sufficient to protect refuges. More information on the ANPR,

proposed rule, and public comments is available at *http://www.fws.gov/refuges/oil-and-gas/rulemaking.html* and also at *www.regulations.gov* at Docket No. FWS–HQ–NWRS–2012–0086.

A detailed discussion of all changes made after consideration of comments on the proposed rule is contained in the *Summary of and Response to Public Comments* section below.

Non-Federal Oil and Gas on the NWRS

Non-Federal oil and gas rights exist within the NWRS in situations where the oil and gas interest has been severed from the estate acquired by the United States, either because:

- The United States acquired property from a grantor that did not own the oil and gas interest; or
- The United States acquired the property from a grantor that reserved the oil and gas interest from the conveyance.

Non-Federal oil and gas interests can be held by individuals, partnerships, for-profit corporations, nonprofit organizations, tribes, or States and their political subdivisions. We recognize that interests in non-Federal oil and gas are property rights that may be taken for public use only with payment of just compensation in accordance with the Fifth Amendment of the U.S. Constitution. Application of this rule is not intended to result in the taking of a property interest, but rather to impose reasonable regulations on activities that involve or affect federally owned lands and resources of the NWRS to avoid or minimize impacts from such activities to the maximum extent practicable.

These regulations do not apply to the development of the Federal mineral estate, including Federal oil and gas, which are administered by the Bureau of Land Management (BLM), under the Mineral Leasing Act and the Federal Land Policy and Management Act. In areas where oil and gas rights are owned by the United States, and leasing is authorized, the applicable regulations are found at 43 CFR part 3100 *et seq.* There is a general prohibition to leasing Federal oil and gas on refuge lands (43 CFR 3101.5–1). These regulations do not apply to refuges located in Alaska.

Examples of non-Federal oil and gas operations conducted on refuges include: Geophysical (seismic) exploration; exploratory well drilling; field development well drilling; oil and gas well production operations, including installation and operation of well flowlines and gathering lines; enhanced recovery operations; well plugging and abandonment; and site reclamation.

Impacts of Oil and Gas Activities on Refuge Resources and Uses

Oil and gas activities have the potential to adversely impact refuge resources and uses in some or all of the following manners:

- Surface water quality degradation from spills, storm water runoff, erosion, and sedimentation;
- Soil and groundwater contamination from existing drilling mud pits, poorly constructed wells, improperly conducted enhanced recovery techniques, spills, and leaks;
- Air quality degradation from dust, natural gas flaring, hydrogen sulfide gas, and emissions from production operations and vehicles;
- Increased noise from seismic operations, blasting, construction, oil and gas drilling and production operations;
- Reduction of roadless areas on refuges;
- Noise and human presence effects on wildlife behavior, breeding, and habitat use;
- Disruption of wildlife migration routes;
- Adverse effects on sensitive and endangered species;
- Viewshed (an area of land, water, or other environmental element that is visible to the human eye from a fixed vantage point) intrusion by roads, traffic, drilling equipment, production equipment, pipelines, etc.;
- Night sky intrusion from artificial lighting and gas flares;
- Disturbance to archaeological and cultural resources associated with seismic exploration and road/site preparation, associated with maintenance activities, or by spills;
- Visitor safety hazards from equipment, pressurized vessels and lines, presence of hydrogen sulfide gas, and leaking oil and gas that can create explosion and fire hazards;
- Wildlife mortality from oil spills or entrapment in open-topped tanks or pits, poaching, and vehicle collisions;
- Fish kills from oil and oilfield brine spills; and
- Vegetation mortality from oilfield brine spills.

Service Authority To Regulate Non-Federal Oil and Gas Activities

As noted in the preamble to the proposed rule, one of the principal recommendations of the 2003 Government Accountability Office report to Congress was for the Service to clarify its regulatory authority with respect to the exercise of non-Federal oil and gas rights within the Refuge System. We provided in the preamble to the proposed rule an explanation of the basis for the Service's authority. As further discussed below, the Service received opposing public comments on its analysis. While some commenters asserted that the Service lacked the authority to regulate such private property rights, others agreed that we do have this regulatory authority.

After carefully considering the public comments, as well as engaging in further discussions with the Office of the Solicitor of the Department of the Interior, the Service concludes that the National Wildlife Refuge System Administration Act, as amended in 1997 by the National Wildlife Refuge System Improvement Act (NWRSAA) (16 U.S.C. 668dd *et seq.*), provides us the statutory authority to promulgate these regulations. In turn, Congress's authority to enact the NWRSAA is the Property Clause of the United States Constitution, which provides it the power ''to dispose of and make all needful Rules and Regulations respecting the Territory or other Property belonging to the United States.'' U.S. Const. art IV, sec. 3, cl. 2.

In 1997, Congress declared the Service's mission to be: ''to administer a national network of lands and waters for the conservation, management, and where appropriate, restoration of the fish, wildlife, and plant resources and their habitats within the United States for the benefit of present and future generations of Americans.'' (16 U.S.C. 668dd(a)(2)). The NWRSAA further directs the Secretary of the Interior, in administering the System, to:

- Provide for the conservation of fish, wildlife, and plants, and their habitats within the NWRS;
- Ensure that the biological integrity, diversity, and environmental health of the NWRS are maintained for the benefit of present and future generations of Americans;
- Ensure that the mission of the NWRS and the purposes of each refuge are carried out;
- Ensure effective coordination, interaction, and cooperation with owners of land adjoining refuges and the fish and wildlife agency of the States in which the units of the NWRS are located;
- Assist in the maintenance of adequate water quantity and water quality to fulfill the mission of the NWRS and the purposes of each refuge;
- Recognize compatible wildlife-dependent recreational uses as the priority general public uses of the NWRS through which the American public can develop an appreciation for fish and wildlife;

• Ensure that opportunities are provided within the NWRS for compatible wildlife-dependent recreational uses; and

• Monitor the status and trends of fish, wildlife, and plants in each refuge.

To carry out its mission and these statutory directives to administer the Refuge System, Congress provided the Service the authority to issue regulations to carry out the NWRSAA (16 U.S.C. 668dd(b)(5)), as well as to prescribe regulations to ''permit the use of any areas within the System for any purpose. . . .'' (16 U.S.C. 668dd(d)(1)(A)). In this regard, the statutory authority of the Service is substantially similar to that of the National Park Service (NPS), which since 1979 has regulated the exercise of non-federal oil and gas rights within the Park System on the basis of its authority to issue regulations ''necessary or proper for the use and management of System units'' (54 U.S.C. 100751).

The rule ''applies to all operators conducting non-Federal oil and gas operations outside of Alaska on Service-administered surface estates held in fee or less-than fee (excluding coordination areas) or Service-administered waters within the boundaries of the refuge to the extent necessary to protect those property interests.'' Thus, the regulation directly relates to the Service mission ''to administer a national network of lands and waters for the conservation, management, and where appropriate, restoration of the fish, wildlife, and plant resources and their habitats . . .'' and various statutory directives, including the conservation of fish and wildlife within the NWRS and ensuring their biological integrity. The rule, therefore, falls within the Service's authority to issue regulations to carry out the NWRSAA (16 U.S.C. 668dd(b)(5)). Regulating the use of Service-administered surface estates and waters also falls within the Service's statutory authority to issue regulations to ''permit the use of any areas within the System for any purpose. . . .''

Several relatively recent appellate court decisions support our interpretation of the NWRSAA. In *Burlison* v. *United States* (533 F.3d 419 (6th Cir. 2008)), the appeals court held that the Service's authority to permit the use of roads on refuge lands included the power to reasonably regulate a reserved easement within a refuge:

> We do conclude, however, that the Fish and Wildlife Service may legitimately exercise the sovereign police power of the Federal Government in regulating the easement. Section 668dd(d)(1)(B) delegates the power to the Secretary of the Interior (and the Fish and Wildlife Service) ''under such regulations as he may prescribe,'' to ''permit the use of . . . any areas within the System for purposes such as . . . roads.''

Id. at 438. *Burlison* also relied on the decision of the U.S. Court of Appeals Eighth Circuit in *Duncan Energy Co.* v. *United States Forest Service,* 50 F.3d 584 (8th Cir. 1995), which upheld the Forest Service's authority to regulate non-Federal oil and gas rights on the basis of statutory authority that is also very similar to that of the NWRSAA:

> Under the Bankhead-Jones Farm Tenant Act, Congress directed the Secretary of Agriculture ''to develop a program of land conservation and land utilization.'' 7 U.S.C. Sec. 1010 (1988). The Act directs the Secretary to make rules as necessary to ''regulate the use and occupancy'' of acquired lands and ''to conserve and utilize'' such lands. 7 U.S.C. Sec. 1011(f) (Supp.V.1993). The Forest Service, acting under the Secretary's direction, manages the surface lands here as part of the National Grasslands, which are part of the National Forest System. See 16 U.S.C. Sec. 1609(a) (1988). Congress has given the Forest Service broad power to regulate Forest System land. See, *e.g.,* 7 U.S.C. Sec. 1011 (1988 & Supp.V.1993); 16 U.S.C. Sec. 551 (Supp.V.1993).

Id. at 589. Similarly, the U.S. Court of Appeals for the Fifth Circuit has interpreted the NWRSAA to authorize the Service to regulate access and use of refuge lands by holders of valid interests in land. *School Board of Avoyelles Parish* v. *United States Department of the Interior* (647 F.3d 570 (5th Cir. 2011)). The School Board administered an enclosed estate within the refuge and under Louisiana property law was entitled to a right of passage over neighboring property to the nearest public road. The Service did not dispute that a right to cross refuge lands existed, but asserted it could condition such use, and imposed permit limits on the times of day and types of vehicles that could use the right-of-way to access the enclosed estate. Reversing the district court, the Fifth Circuit affirmed the authority under the NWRSAA and Service regulations to require a permit and to impose reasonable conditions for ''any person entering a national wildlife refuge'' even where that person held property rights afforded under the laws of Louisiana. Citing *Burlison* and a series of Supreme Court and circuit court cases interpreting the Property Clause, the Fifth Circuit held that requiring a permit for entry and use, and imposing reasonable restrictions on the exercise of the non-Federal property rights, was well within Federal authority under the Property Clause.

The primary arguments that the Service lacks the necessary regulatory authority are based on the analysis contained in a 1986 memorandum from the Associate Solicitor, Division of Conservation and Wildlife (''1986 Opinion'') that concluded the Service then lacked the authority from Congress to adopt regulations requiring permits for access by holders of mineral interests, unless the authority was provided for in the deed by which the United States acquired title to the surface estate. That opinion relied in part on *Caire* v. *Fulton,* 1986 U.S. Dist. LEXIS 31049 (W.D. La. 1986), an unpublished district court decision, where the United States had explicitly agreed during eminent domain proceedings to delete from the proposed deed a provision authorizing Service regulation of the oil and gas interests not being acquired.

The 1986 Opinion was also premised on a provision of the Migratory Bird Conservation Act (MBCA), originally enacted in 1929 and amended in 1935, that now provides:

> The Secretary of the Interior may do all things and make all expenditures necessary to secure the safe title in the United States to the areas which may be acquired under this subchapter, but no payment shall be made for any such areas until the title thereto shall be satisfactory to the Attorney General or his designee, but the acquisition of such areas by the United States shall in no case be defeated because of rights-of-way, easements, and reservations which from their nature will in the opinion of the Secretary of the Interior in no manner interfere with the use of the areas so encumbered for the purposes of this subchapter, but such rights-of-way, easements, and reservations retained by the grantor or lessor from whom the United States receives title under this subchapter or any other Act for the acquisition by the Secretary of the Interior of areas for wildlife refuges shall be subject to rules and regulations prescribed by the Secretary of the Interior for the occupation, use, operation, protection, and administration of such areas as inviolate sanctuaries for migratory birds or as refuges for wildlife; and it shall be expressed in the deed or lease that the use, occupation, and operation of such rights-of-way, easements, and reservations shall be subordinate to and subject to such rules and regulations as are set out in such deed or lease or, if deemed necessary by the Secretary of the Interior, to such rules and regulations as may be prescribed by him from time to time. (16 U.S.C. 715e)

The Service broadly construes its statutory authority to issue regulations ''to permit the use of any area within the System for any purpose'' and that the NWRSAA, not the MBCA, is therefore the controlling authority with respect to regulating non-federal oil and gas rights. While the specific facts of the unreported decision in *Caire* have always suggested that it was of limited precedential value, the Fifth Circuit's

decision in *Avoyelles Parish* is the controlling juridical authority to apply in that circuit. Moreover, even if the MBCA provisions were construed to limit the applicability of the NWRSAA authority, which clearly it does not, those limits would apply only to lands acquired under that Act. As of the end of Fiscal Year 2015, approximately 31.3 percent of the total 8,100,204.93 acres of Federal lands and interests in lands in 252 of the Nation's approximately 560 National Wildlife Refuges have been purchased under authority of the MBCA.

In our review of various deeds used by the Service over the years to acquire lands and interests in lands that make up the NWRS, we find many variations were used and that it is not possible to review or summarize here all such provisions, or ensure that we are familiar with the circumstances surrounding each acquisition of NWRS lands that did not include oil and gas rights. As part of the pre-application meeting with the Service (see § 29.91), and/or the submission of a permit application (see § 29.94), we will provide the opportunity to receive copies of any deeds and other relevant information that the applicant believes would control or otherwise limit the applicability of any provision of this rule to the particular applicant's operations. We intend this process to ensure on a case-by-case basis that the Service fully considers all relevant information concerning the particular acquisitions before imposing specific requirements on the applicant's operations. The Service will respect applicable deed conditions; however, the rule requirements will apply to the extent that they do not conflict with such deed conditions, which we believe will be the situation in most cases. The Solicitor's Office has withdrawn the 1986 Opinion on the basis that the opinion is out of date and does not reflect the current state of law with regard to the Service's full authorities to manage lands within units of the NWRS. The Solicitor will be issuing a new opinion in the near future that sets out the supporting legal analysis of the underlying authorities upon which the Service is adopting this rule.

Final Rule

Summary of Final Rule

The rule generally requires that operators receive permits for new non-Federal oil and gas activities on the NWRS; provide a regulatory framework to achieve the necessary protections for refuge resources; and improve regulatory consistency to the benefit of both refuge resources and oil and gas operators. The rule contains performance-based standards that provide flexibility to resource managers and operators to use evolving technologies within different environments to achieve the standards. It establishes standards for surface use and site management, specific resource protections, spill prevention and response, waste management, and reclamation. Additionally, the rule contains procedures for permit applications and Service review and approval. Finally, there are provisions for financial assurance (bonding), access fees, mitigation, change of operator, permit modification, and prohibitions and penalties. We incorporated public input received during the rulemaking process to shape the rule.

Permitting Approach

The permitting process allows the Service to ensure that refuge resources, as well as public health and safety, are protected to the greatest extent practicable. Under the rule, the Service requires the following:

a. *New operations are by permit only.* Operators conducting new operations must obtain an operations permit before commencing new or modified operations within a refuge (§ 29.42). This requirement addresses exploration, drilling, production, enhanced recovery operations, transportation, plugging, and reclamation operations. We encourage operators to contact the Service early in the process so that the Service can provide suggestions to improve the application. Additionally, an operator will be authorized to begin operations only after the operator has received all other required State and Federal permits.

b. *Operations under an existing Service permit may continue under the terms of that permit,* but must comply with existing Federal, State, and local laws and regulations and the applicable general terms and conditions of this rule (§ 29.43). Operators are required to obtain a new permit or amend their existing permit if they propose to conduct new operations or modify their existing operations (*i.e.,* proposed activities outside the scope of their existing approval that will have impacts on refuge resources as determined by the Service). At the time of reclamation, the Service will review existing permits and modify them as necessary to ensure compliance with all Service reclamation standards.

c. *Operators with operations not under a Service permit* being conducted prior to the effective date of this rule, or prior to a boundary change or establishment of a new refuge, are considered ''pre-existing operators'' and may continue to operate as they have been, but they must comply with existing Federal, State, and local laws and regulations and the applicable general terms and conditions of this rule (§ 29.44). Additionally, these operators are required to obtain an operations permit for any new operations or for any modification to their existing operation. Finally, once production operations cease, the operator must obtain an operations permit for plugging and reclamation, or to maintain their well(s) in extended shut-in status.

d. *All operators must have a permit* for plugging and reclamation and comply with all Service reclamation standards.

e. When pre-existing operations are transferred, the new operator must obtain an operations permit.

f. *Wells drilled from outside refuges or on non-Federal inholdings to access non-Federal minerals* are exempt from these regulations.

g. *Operations on refuges in Alaska* are exempt from these regulations. However, the performance-based standards of this rule may be used, as appropriate, as guidance in determining how an operator would meet the various requirements of ANILCA and ANCSA to protect refuge resources and uses.

The Service finds that this permitting process is the best way to manage oil and gas operations and protect refuge resources on the NWRS and using time, place, and manner stipulations are the most effective way for the Service to avoid or minimize impacts. The ''place'' factor in the ''time, place, and manner'' equation is often most important in terms of ability to protect an environmental resource. The risks created by a poorly selected location cannot easily be overcome with even the best operational methods. Conversely, proper site selection can do much to mitigate the effects of accidents or environmentally unsound practices. The ''time'' factor restricts the timing of operations to remove or minimize impacts on resources that are only seasonally present. The ''manner'' factor is the method in which oil and gas activities are conducted, using best management practices. Therefore, requiring a permit that contains such stipulations is the most effective way to avoid or minimize impacts of new operations.

Proper site planning, timing restrictions, and best management practices established through the permit process for new operations will accomplish great improvements in resource protection. Because existing

operations with a special use permit already have stipulations in those permits that have been implemented to protect refuge resources and uses, they are allowed to continue their operations under the terms of that permit. Furthermore, the Service is not requiring a permit for operators with existing operations not currently under a permit (pre-existing operations) because a majority of the impacts avoided or mitigated under the permit have already occurred, and the permit process can result in substantial administrative and operational costs on both the Service and the operator. These costs (similar to those of permitting new operations) could be disproportional to the environmental benefits gained where the operator's well has already been drilled and the area of operations (access route, well site, production facilities, and routes for gathering lines) has already been established.

Our analysis found that the Service could eliminate many of the ongoing, unnecessary impacts to refuge resources and uses resulting from the production phase of pre-existing operations by enforcing State laws and regulations on Service-administered lands and waters. Making violation of applicable State laws related to oil and gas a prohibited act under the rule allows the Service to enforce these requirements as Federal requirements, and so gives us greater enforcement capabilities in ensuring that unnecessary impacts from these operations, such as leaks and spills, are avoided or minimized. This approach to permitting allows the Service to focus its limited time and resources on those new operations that create the highest level of incremental impacts. Also, by requiring all operators, pre-existing, existing with a Service-issued permit, and new, to have a permit for plugging and reclamation, we can ensure rehabilitation of impacted habitat.

When a well is drilled on inholdings or non-Federal adjacent lands, impacts to refuge resources are avoided or minimized to a great extent. Therefore, the Service's approach of exempting downhole aspects of these operations that occur within a refuge from the regulations is intended to provide an incentive for operators to use drilling from a surface location not administered by the Service in order to reach their oil and gas rights under the refuge-administered surface estate. However, anytime an operator needs to physically cross Service land for access, including access to a non-Federal surface location, such as an inholding, to conduct operations, then the operator must comply with the applicable provisions of this subpart for obtaining approval from the Service for such access, including obtaining an operations permit covering the new access or modification to the existing access.

Operating Standards

The Service developed this rule using a suite of performance-based standards that establish goals and define a desired level of protection for refuge resources and uses. This approach provides flexibility to resource managers and operators to best protect refuge resources and uses over time and across various environments by uses of varied technologies and methods. Resource managers and operators will identify and develop specific actions and best management practices that are then incorporated into operations permits. In contrast, prescriptive regulations define specific requirements of time, place, and manner and may not fully consider how these measures achieve the desired level of resource protection or how they may apply in different environments. The Service examined other Federal and State oil and gas regulations and determined that the performance-based standards approach provided the most efficient means of successfully avoiding or minimizing the effects of oil and gas operations on refuge resources and visitor uses. A one-size-fits-all (*i.e.,* prescriptive) approach does not work due to the widely differing environments found at the various refuges with non-Federal oil and gas rights across the country. A performance-based standards model has been successfully used by NPS for more than 35 years and applied in the context of a permit that contains specific actions an operator must take to meet the regulatory standards.

In developing and analyzing the rule and alternatives, the Service found that the preponderance of impacts and risks of impacts to refuge resources associated with exploration and development of oil and gas emanate from surface activities. However, mishaps below the surface can adversely affect the surficial groundwater systems that are important to the success of many national wildlife refuges. This finding holds true for operations that include the use of hydraulic fracturing. The Service found that well drilling and production operations that include the use of hydraulic fracturing have similar types of surface activities (*e.g.,* road and pad construction, tractor-trailer truck traffic, use of water, use of chemicals, use of large diesel-powered engines, generation of waste) as operations that do not include hydraulic fracturing. Hydraulic fracturing operations, particularly those used in combination with horizontal drilling techniques to access oil or gas in shale or other ''tight'' formations, usually increase the scope, intensity, and duration of activities commonly associated with oil and gas well drilling and completion, as well as the pressures to which the well casings are subjected.

In the context of this rule, the term ''hydraulic fracturing'' means those operations conducted in an individual wellbore designed to increase the flow of hydrocarbons from the rock formation to the wellbore through modifying the permeability of reservoir rock by applying fluids under pressure to fracture it. It does not include the comprehensive list of all oil and gas activities associated with development that happens to include hydraulic fracturing. While the rule's operating standards are not specific to hydraulic fracturing operations, they were developed with the expectation that hydraulic fracturing will occur on refuge lands and give the Service the ability to effectively manage the additional impacts that hydraulic fracturing may have on refuge resources and uses.

The Service notes that BLM has recently promulgated regulations addressing hydraulic fracturing on Federal and Indian lands at 43 CFR part 3160 (80 FR 16128, March 26, 2015). We carefully considered the recently promulgated BLM oil and gas regulations on hydraulic fracturing. (The Service also notes that those regulations have been set aside by the U.S. District Court in Wyoming, and that decision is on appeal to the United States Court of Appeals for the Tenth Circuit.) The Service and BLM take different approaches to operating standards because of our differing statutory bases for regulating the exercise of oil and gas rights. Specifically, the BLM has regulatory authority over the development of the Federal mineral estate, including Federal oil and gas resources under Federal and Indian lands. Instead, these Service regulations address private property rights within refuges and are based on the authorities and directives of the NWRSAA, including ''to administer a national network of lands and waters for the conservation, management, and where appropriate, restoration of the fish, wildlife, and plant resources and their habitats within the United States for the benefit of present and future generations of Americans.'' Therefore, the Service's regulations are focused on avoiding or minimizing impacts to federally owned and administered lands and resources of the NWRS to the maximum extent

practicable by using the most technologically feasible, least damaging oil and gas development methods to protect refuge resources and uses.

The rule maintains the non-prescriptive operating standards from the proposed rule, which are similar to the existing NPS regulations in 36 CFR, subpart B (the ''9B'' regulations), and provide operators flexibility to design operations while protecting refuge resources, uses, and visitor health and safety. The Service's approach is to review an operator's submissions to determine if they are avoiding or minimizing impacts to the maximum extent practicable, and if not, to include in the operating permits the terms and conditions that will ensure that they do so.

State Regulations

The Service's goal in this rule is to provide a regulatory regime that complements State regulatory programs to the benefit of the surface estate and the resources for which we are entrusted, while not compromising the ability of operators to develop their resource. The Service and State oil and gas agencies have fundamentally different missions. The Service's legal mandate is to conserve fish, wildlife, and plant resources and their habitats for the benefit of present and future generations. In contrast, State oil and gas regulations typically focus on the protection of mineral rights and ''conservation'' of the oil and gas resources (*i.e.,* minimizing waste of oil and gas resources). From a regulatory perspective, management of oil and gas operations is necessary in order for the Service to protect its surface resources and meet its congressionally mandated mission.

The Service's intention is to avoid or minimize potential procedural and operational duplication of State programs, while working cooperatively to achieve common objectives between the Service, States, and operators. The Service received several comments from the public on the effectiveness of State regulations in protecting refuge resources and uses, and that issue is discussed further below in our response to comments.

In the context of enforcing State oil and gas regulations, the Service focus is on noncompliance issues that have the potential to adversely affect refuge resources and visitor uses. Making violation of non-conflicting provisions of State oil and gas law and regulations a prohibited act under the rule allows us to enforce on refuges as a matter of Federal law, the same requirements already imposed on operators by a State. States may not have enough inspectors to ensure companies are meeting State standards. Louisiana, the State with the most non-Federal oil and gas production on refuge lands, recently reported that it lacks an adequate number of inspectors and its inspection rate is too low. Under this rule, Refuge Law Enforcement will work cooperatively with States to ensure that operators on refuges are meeting Service and State regulatory requirements with a minimum of duplication.

Summary of and Response to Public Comments

A summary of substantive comments and Service responses is provided below followed by a table that sets out changes we have made to the proposed rule based on the analysis of the comments and other considerations.

Authority

1. *Comment:* We received comments both in opposition to and in support of our general authority to manage oil and gas operations on Refuge lands. Commenters opposing our authority generally noted that they believe the Service has limited authority to regulate oil and gas operations based on the authority by which the Service acquired the land and specific deed language in the Migratory Bird Conservation Act (MBCA; 16 U.S.C. 715e) and the Supreme Court decision in *United States* v. *Little Lake Misere Land Co.* (412 U.S. 580,597–98 (1973)), which interpreted the MBCA to require the Service to express in the deed language that non-Federal mineral rights will be subject to regulation. Commenters also cited subsequent case law and the legislative history of both the National Wildlife Refuge System Administration Act, as amended by the National Wildlife Refuge System Improvement Act (16 U.S.C. 668dd) (NWRSAA and NWRSIA), to contend that the Service has not since been granted specific authority to regulate non-Federal mineral rights and so, absent specific deed language, the Service is limited to common law in protecting refuge resources and uses from impacts associated with oil and gas operations.

Other commenters expressed support for our general authority and responsibility to promulgate regulations to manage non-Federal oil and gas based on the Property Clause of the Constitution (U.S. Const.) and the NWRSIA, as well as subsequent case law that has held that the Service does have the authority to reasonably regulate access to private rights on the NWRS (see *Sch. Bd. of Avoyelles Par.* v. *U.S. Dep't of Interior,* 647 F.3d 570, 581, 581 n.4 (5th Cir. 2011); *Burlison* v. *United States,* 533 F.3d 419, 434–35 (6th Cir. 2008)).

Service Response: We have carefully considered all the comments, and the Service concludes that the NWRSAA, as amended by the NWRSIA, provides us the statutory authority pursuant to Congress' Property Clause powers to promulgate and implement these regulations as further explained in the preamble to the proposed rule. Furthermore, we conclude these regulations are also consistent with common law principles that a mineral rights holder's access to their minerals cannot unreasonably impact the surface estate. These regulations respect an operator's right to use the surface estate on refuges while protecting and minimizing impacts to refuge resources and uses to comply with the unique mission of these public lands ''for the conservation, management, and where appropriate, restoration of the fish, wildlife, and plant resources and their habitats within the United States for the benefit of present and future generations of Americans.'' (16 U.S.C. 668dd(a)(2)). For additional information on our authorities, see the section on *Service Authority to Regulate Non-Federal Oil and Gas Activities.* With regard to the comment citing the Supreme Court Case *U.S.* v. *Little Lake Misere Land Co.,* as we state in the *Service Authority to Regulate Non-Federal Oil and Gas Activities* section, the Service will respect applicable deed conditions, however, the rule requirements will apply to the extent that they do not conflict with such deed conditions.

Acquisition of Minerals Under the NWRS

2. *Comment:* The Service received several comments suggesting that the Service consider buying all non-Federal mineral rights to ensure complete protection of refuge resources and uses from these activities.

Service Response: The Service has determined that acquisition of all mineral rights in refuges is financially infeasible and unnecessary to protect refuge resources and uses. While the Service did not undertake a costly and time-intensive evaluation of the fair market value of the non-Federal oil and gas rights within the NWRS, in the EIS associated with this rulemaking we did consider full acquisition of such oil and gas rights, but this alternative was dismissed from further consideration because it was financially infeasible and unnecessary. Relying on our general knowledge of what acquiring a mineral right can cost in areas where there is potential for oil and gas development,

we conclude that it would be too costly for the Service to acquire all mineral rights that exist within the NWRS.

Additionally, the Service concludes that it can sufficiently protect refuge resources and uses as required by the NWRSAA and provide access to operators for developing their non-Federal oil and gas rights under this rule, and so acquisition of all mineral rights is unnecessary. Under the rule, the Service will determine on a case-by-case basis, and in collaboration with prospective operators, whether a proposed operation meets the operating standards and approval standards contained in this rule. If the proposed operation cannot meet Service standards for protecting refuge resources and uses, the Service has general statutory authority to acquire the mineral right from a willing seller in those instances.

Rule's Function With State and Federal Regulations

3. *Comment:* Several comments stated that State regulations fully accomplish all the necessary protections of NWRS resources and uses, and, therefore, the proposed rule is duplicative and unnecessary. Commenters contended that many of the operational restrictions of the proposed rule were duplicative or in conflict with State regulations, although no specific examples were provided. The Service also received comments that supported the Service's analysis that State regulations are not uniformly designed or intended to fully protect the surface owner's interests or, as in this case, mandates of the Service to protect NWRS resources and uses.

Service Response: While developing the proposed rule, the Service reviewed the oil and gas regulations of 43 States. Because of the differences between the objectives of State regulation and the rule, we found that State regulations do not fully address necessary protections for the conservation of fish and wildlife resources and public use on refuges. The Service's legal mandate is to conserve fish, wildlife, and plant resources and their habitats for the benefit of present and future generations. In contrast, State oil and gas regulations typically focus on the protection of mineral rights and conservation of oil and gas resources (*i.e.,* minimizing waste). States do provide for protection of surface and groundwater via well design requirements, setbacks, and oil pollution control measures. However, State programs vary in these areas, and also in regard to protection of many other surface resources and surface use conflicts.

Most States are consistent in deferring to landowners and operators to work out many of the details of surface uses, and formal surface use agreements between landowner and operator are common. In some States, like Oklahoma and New Mexico, oil and gas companies are required by statute to enter into these agreements before production begins. A surface use agreement may direct the specific locations of access routes, drilling sites, and flowlines that are placed on the property. Timing considerations may be critical for protections of wildlife that may be present only seasonally. The final regulations provide a consistent set of procedures and operational standards which when incorporated into an operations permit are the functional equivalent of a ''surface use agreement'' between the Service and operator.

Furthermore, the Service has carefully designed this rule to work in concert with the State oil and gas regulatory processes. The Service has analyzed which aspects of State oil and gas regulatory regimes are generally sufficient for protecting refuge resources and uses and which are not, and have sought to regulate in this rule only those activities where State regulatory regimes are not generally sufficient. Our analysis found the preponderance of impacts to refuge resources and uses associated with oil and gas activities emanate from surface uses, not the downhole aspects of an operation. Our analysis also found that there is a possibility of impacts to groundwater from downhole operations, so the rule provides the Service with the ability to go further than State regulations when necessary to protect groundwater.

Accordingly, the rule does not regulate most downhole activities related to an operation, including well construction and blowout prevention. The regulation does include a downhole operating standard to prevent the escape of fluids to the surface and for isolation and protection of usable water zones throughout the life of a well. Otherwise, the Service finds that State regulations are sufficient to ensuring that downhole operations are protective of refuge resources and uses, as well as public safety. As this example shows, the Service regulations avoid unnecessary procedural and operational duplication with State programs, and reflect the Service's intention to work cooperatively with States and operators to achieve common objectives.

4. *Comment:* Additionally, the Service received comments that recommended the Service not rely on State regulations to protect refuge resources and uses from the impacts associated with pre-existing operations, believing that the Service has been somewhat contradictory in its analysis that State regulations are not sufficient, but then relying on State regulations to protect refuge resources and uses from pre-existing operations in the proposed rule.

Service Response: The Service has considered these comments and would like to clarify its prior explanation why relying on existing Federal and State regulatory regimes is sufficiently protective. As required by Executive Order (E.O.) 12866, the Service analyzed the costs and benefits of each regulatory requirement being considered. This analysis found that new operations create the greatest additional impacts on refuges and that proper site planning, timing restrictions, and best management practices (BMPs) through a permit system accomplish the greatest improvement in resource protection. The permit process focuses on the full suite of time, place, and manner considerations on those new operations that create the highest level of incremental impacts. By applying a reclamation standard for all operations on refuges, including pre-existing operations, the rule also ensures long-term rehabilitation of habitat damaged by all operations.

While applying the full regulatory requirements to pre-existing operations may provide some incremental protection for refuge resources and uses, it would not retroactively eliminate a majority of the impacts to refuge resources and uses that have already taken place as a result of pre-existing operations. For example, pre-existing wells have already been drilled, the area of operations (access route, well site, production facilities, and routes for gathering lines) established, and impacts to refuge resources, such as to geology and soils, wetlands, and wildlife-dependent recreation, have all occurred prior to this rule being effective.

In terms of ongoing impacts from production, our analysis indicates that an operator's compliance with State laws will serve to improve protection of refuge resources and uses from ongoing impacts from these operations, in areas such as removal of waste, storage of chemicals, and leak and spill prevention. Where individual States' regulations do not specifically address an issue, the Service will continue to work cooperatively with operators to reduce impacts, or risks of impacts, to refuge resources and uses. This approach enables managers to focus limited resources on those operations with the greatest possible impacts to refuge resources and uses rather than an

indiscriminate administration of permits for the approximately 4,000 pre-existing operations. A general permit requirement would necessitate the Service to roughly double its oil and gas management resources from current levels, while the administrative costs to operators of pre-existing wells would be approximated to be initially $1,800 per well annually. Our analysis indicates these costs, in general, would be inefficiently applied and disproportionately high in general relative to the benefits to refuge resources and uses.

Scope: Inholdings

5. *Comment:* The Service received comments both expressing a lack of authority for the Service in regulating inholdings as well as comments asserting that the Service has both the authority and the responsibility to regulate operations on private lands, including inholdings, under the Property Clause and the NWRSIA, which commenters contend granted the Service the authority to regulate outside the boundaries of the Refuge to the extent that such activities interfere with the designated purpose of Federal lands (citing *Minnesota* v. *Block,* 660 F.2d 1240, 1249 (8th Cir.1981)). Some commenters also noted that the Service has taken a different approach from the NPS and suggested the Service adopt the NPS approach to inholdings.

Service Response: The Service has carefully considered these comments; however, the Service has concluded that no change should be made in the rule, which appropriately balances refuge protection, private property rights, and feasibility of administration. As discussed in the Final EIS, there are some potential cross-boundary impacts from oil and gas development on refuge resources and uses, such as spills or leaks migrating into refuge lands or waters or noise disturbance on wildlife and visitor experience. The Service has always worked, and will continue to work, with operators on inholdings and adjacent lands to mitigate or avoid any potential cross-boundary impacts, particularly those that may impact species protected under the Endangered Species Act. For instance if an operator were proposing to site an operation close to a refuge boundary, we might ask them to set the operation back, ensure they have proper spill or leak protection methods, and site the operation away from any waterways that flow into a refuge. Furthermore, even when exempted from these regulations, operators do not have a right to cause unreasonable damage to refuge resources and uses and are responsible for any damage done from their operations (*e.g.,* leaks or spills). Existing Federal and/or State laws provide enforcement remedies for activities on non-Federal lands that damage Refuge resources and uses. Additionally, by not imposing regulations on inholdings or non-Federal adjacent lands, the Service is incentivizing operators to locate such operations off refuges.

As to the differences between the proposed revisions to the NPS 9B regulations (80 FR 65572; October 26, 2015) and this rule, an operator working on both NWRS and NPS lands will experience little difference in regulatory resource and use protections, regulatory structure based on performance standards, operations permit processes and requirements, monitoring and compliance, and other terms and conditions. However, there are some variations between the two proposed rules necessitated by differing authorities and missions and the scope and resources of the two agencies' non-Federal oil and gas programs. The existing and future potential for operations on inholdings within the NPS is much smaller than that of the NWRS, and, therefore, the administrative burden is more manageable for NPS's oil and gas program to regulate activities on inholdings to the extent necessary to protect park resources and uses.

In designing this rule, the Service has carefully considered the environmental benefits of these regulations in light of the Service's mission and limited resources and has chosen to prioritize regulation of activities on Service lands. As noted above, the Service defines the National Wildlife Refuge System to consist of all lands, waters, and interests therein that it administers (25 CFR 25.12) and does not apply its regulations to the non-Federal lands found within refuge boundaries (*i.e.,* inholdings). Furthermore, the Service has concluded that it can manage the cross-boundary impacts from inholdings and non-Federal adjacent lands through cooperation with operators instead of through direct regulation, which places a heavy administrative burden on the Service and operators.

Scope: Operations on Non-Federal Land

6. *Comment:* The Service received similar comments regarding directional drilling operations on non-Federal land as it did for inholdings, recommending that the Service extend regulations beyond the NWRS to operations on private lands as described in the Modified Proposed Rule alternative of the DEIS. We also received comments from others that the Service has no authority to do so. Some commenters also noted that the Service has taken a different approach from the NPS and suggested the Service adopt the NPS approach to directional drilling operations.

Service Response: The Service has considered these comments; however, we have not extended the rule to operations on inholdings and non-Federal adjacent lands from which there is directional drilling under Service-administered surface estate. The Service has a clear legal and policy directive to protect refuge lands and resources, and having oil and gas operations sited off refuge property is preferable to having impacts occur on refuge lands. Our analysis shows avoiding the cost and time delay of Service regulation provides an incentive for operators to drill from a non-Federal surface location to reach their oil and gas rights within a refuge. Exempting downhole operations that occur inside a refuge from these regulations will result in fewer wells drilled on refuge-administered lands and waters resulting in an overall benefit to refuge resources and uses (avoidance or minimization of direct impacts).

If the Service extended its regulation beyond the NWRS as evaluated in Alternative C of the EIS, the Service could require actions, such as noise abatement or visual screening, which serve to reduce cross-boundary effects on Service resources and uses. However, these benefits to resources and uses could evaporate, and many adverse consequences could occur, if just a small percentage of wells that otherwise would have been located outside a refuge are drilled in a refuge. Gains in resource protection under Alternative C would likely be lost due to loss of the incentive to locate operations outside the refuge. Locating all operations (surface and downhole) inside the boundary of a refuge would subject refuge resources and values to the long-term impacts of surface occupancy within the park—impacts that would last years, if not decades. Therefore, the Service concludes the best course of action is to maintain the incentive in the proposed rule to encourage operators to locate operations outside a refuge.

The Service will continue to work with operators, landowners, and other permitting agencies to address issues that may arise from operations on non-Federal adjacent lands. For example, the Service could advocate for setbacks from the refuge boundary or waterways and strong spill control and response measures to reduce the risk of damage to refuge resources from accidents. As mentioned above, even where exempt

from these regulations, operators do not have a right to cause unreasonable damage to refuge resources and uses and are responsible for any damage done from these operations (*e.g.,* leaks or spills).

Additionally, based on the comments the Service received, it appears that some commenters misunderstood the NPS rule as related to operations on non-Federal lands outside the park boundary from which there is directional drilling underneath a park unit. NPS's regulatory authority over directional drilling operations begins at the subsurface point where the proposed operations (borehole) cross the park boundary and enter federally owned or administered lands or water, and applies to all infrastructure and activities within a park unit. Additionally the NPS provides an exemption to the operations permit requirement for these in-park operations if it determines they ''pose no significant threat of damage to park resources.'' In the many decades that the NPS has had this exemption in place, it has not made a single finding that such operations pose a significant threat. In only a few instances has NPS included in its determination suggestions to the operator to modify its planned operations in any way.

The Service has concluded that the risk of any impacts to refuge resources by the Service not regulating the portion of a wellbore beneath a refuge is exceedingly low. The Service has carefully designed this rule to ensure that it is prioritizing its limited resources on those oil and gas activities that have the greatest impact to refuge resources and uses. Commenters from both industry and non-governmental organizations have asked the Service to ensure it has the resources to effectively implement this rule. The Service has carefully analyzed its resources and capabilities and has specifically tailored this rule to ensure maximum refuge protection within the constraints of its management capabilities. The Service agrees with commenters that it must ensure that it has sufficient resources to implement the rule in order for it to be successful. Balancing the low risk of impacts from the downhole aspects of these directional-drilling operations on refuge resources and uses with the high administrative costs of regulating all of these operations, the Service has exempted these operations in the rule.

Hydraulic Fracturing and Regulation of Downhole Activities

7. *Comment:* Several commenters requested that the Service ban hydraulic fracturing completely from the NWRS.

Service Response: The Service considered these comments, as well as other information and studies provided by commenters regarding hydraulic fracturing, and we have concluded that the additional information provided did not justify a change from the proposed rule's approach to hydraulic fracturing. Comments requesting the ban on hydraulic fracturing used the term to encompass all the activities and impacts that are associated with oil and gas development that happens to use hydraulic fracturing. These comments did not provide new information to the Service.

The information provided by commenters was available and considered by the Service in developing the proposed rule. The Service has determined that the actual process of hydraulic fracturing does not create impacts or risks of impacts that are so elevated above those of conventional oil and gas operations in general that a hydraulic fracturing ban is justified. It is the Service's policy that ''scientific and scholarly information that we consider in our decision-making must be robust, of the highest quality, and the result of the most rigorous scientific and scholarly processes as can be achieved'' (212 FW 7).

As the Service has noted in the EIS accompanying the rule, studies show that oil and gas operations that include hydraulic fracturing stimulation methods can negatively affect surrounding resources and the environment and can increase the risks of such impacts where appropriate measures are not taken before, during, and after hydraulic fracturing operations (*e.g.,* improper cementing of casing and well integrity issues or surface mismanagement of fracking and flowback fluids). However, studies also show that proper implementation of such measures can substantially reduce—to a level close to that of conventional well operations—the risks to the surrounding environment from hydraulic fracturing operations.

Based on the Service's review of studies provided during the public comment period, we do not find that a ban on hydraulic fracturing completion methods in refuges is necessary or appropriate at this time. The Service will continue to revisit and update its policy as more information on hydraulic fracturing completion methods becomes available. Further, the Service notes that well completion programs using hydraulic fracturing were not given approval under the proposed rule. The rule also does not give such approval, and includes operating and approval standards developed with the knowledge that hydraulic fracturing operations will likely be proposed by operators and were designed to ensure that operators employ technologically feasible least-damaging methods that will not impact refuge resources and uses. The Service will consider hydraulic fracturing operations on a case-by-case basis and analyze potential impacts on refuge resources and uses under the regulations' approval standards.

8. *Comment:* The Service was asked to clarify how the rule would, or would not, be impacted by BLM's impending fracking rule and associated litigation.

Service Response: As explained in the proposed rule, we have taken different approaches to regulating hydraulic fracturing activities based on our different statutory authorities and the specific needs of the NWRS. The Service has concluded that our rule is consistent with our statutory authorities and, therefore, should not be affected by the pending litigation.

9. *Comment:* The Service received several comments recommending that the Service extend its regulations to more comprehensively cover all aspects of downhole operations, particularly with regard to wellbore construction standards for operations that include use of hydraulic fracturing. Commenters also requested that the Service require baseline flowback requirements. On the other hand, the Service received comments that that Service regulation will only duplicate existing State and Federal requirements that fully address these downhole issues.

Service Response: The Service analyzed both the costs and benefits of further regulating downhole operations on the NWRS through this rulemaking and found the increased costs necessary to hire and maintain engineering staff to oversee our own separate downhole requirements and standards would not likely provide a comparable benefit in reduction of impacts or risks of impacts to surface resources. The Service reviewed and considered the comments and studies provided by the public on this issue, but found they did not change the Service's analysis of the benefits. On the other hand, the Service did identify additional costs for both the Service and industry if the Service were to regulate downhole operations. The Service would need additional specialized technical staff to evaluate proposals and subsequently monitor and inspect downhole operations for compliance. Industry costs would involve providing downhole well construction information such as drilling, mud, casing, cementing, and stimulation programs. This information

is developed as a matter of course by industry, so there would be some minimal costs to provide copies of these programs.

Recognizing the public concern regarding impact to water resources from these activities and the Service's responsibility to ensure that it protects these resources, the rule does include standards for well control and isolation and protection of usable water (§ 29.119(a)(3) and (4)). The standard serves to inform the public and the operators that the Service retains regulatory control for management and protection of all its resources including groundwater. However, as discussed above, the Service would have to substantially augment its engineering capacity to review, approve, and monitor downhole well construction. Comprehensive Service regulation of downhole wellbore construction and maintenance for the isolation and protection of usable water would duplicate state programs in many areas, and thus provide a diminished return in terms of reduction of risks to groundwater. Additionally, the rule includes provisions (information requirements, operating standards, and reporting requirements) that address the management of wastes including flowback fluids. Under the rule, all new hydraulic fracturing operations will be conducted under new operations permits or modifications to existing Service-approved permits. Thus, new operations under the rule are required to provide for management of flowback fluids, including tanks to capture and temporarily store flowback fluids, no use of earthen pits, and prompt removal of wastes from the refuge.

Easements

10. *Comment:* Some commenters requested clarity on the applicability of these regulations to easements.

Service Response: The definition of the National Wildlife Refuge System includes less than fee interests in land such as easements (50 CFR 25.12). Therefore, the exercise of non-federally owned oil and gas rights underneath the Service's easement estate are subject to these regulations to the extent necessary to protect the interests held by the United States under the easement (see § 29.40(b)). The Service holds many unique and varied easement interests throughout the United States. For this reason, it is difficult to generalize how the rule applies to any particular easement. To determine the applicability of these regulations, the Service will review the terms of the legal instrument by which the United States acquired or reserved its easement interest to determine what regulation is appropriate in relation to that interest. Oil and gas operations will be subject to some and not necessarily all, of the requirements and standards of this subpart. Depending on the easement interest acquired, the Service may require an operator to obtain a permit from the Service to ensure that operations minimize the destruction of vegetative cover, control spread of invasive species, and/or avoid ecologically sensitive habitats by using technologically feasible, least-damaging methods. On the other hand, if an operator avoids burning, draining, filling, or dredging wetlands on one of the Service's conservation easements acquired for the purpose of protecting wetlands, the operator is likely exempt from these regulations.

Ultimately, the Service wants to ensure it is notified of operations that may affect the Service's less-than-fee interests and work cooperatively with the landholder and mineral rights holder, if different, to minimize or avoid impacts to our conservation interest in the land. However, the Service will continue to provide reasonable access to mineral rights holders for the development of their mineral rights, as we do on fee-title lands of the NWRS. The Service will work with operators and landowners in determining what is reasonable to protecting the Service's property interests under the easement.

Oil and Gas Operations in Alaska

11. *Comment:* The Service received several comments on how the proposed rule would affect oil and gas operations on refuges in Alaska and asking for clarification from the Service on how the rule would work in conjunction with the Alaska National Interest Lands Conservation Act (94 Stat. 2371; Pub. L. 96–487) and implementing regulations (43 CFR part 36). The Service got several comments recommending that the Service should clarify and revise the rule to fully recognize the controlling role of ANILCA and its implementing regulations in Alaska, and to address other issues. For instance, the Service received a comment to specifically replace the multiple references to ANILCA with the following blanket provision stating that ANILCA and implementing regulations at 43 CFR part 36 govern access, including but not limited to access to inholdings in Alaska, in lieu of the provisions of the non-Federal oil and gas regulations in subpart D: ''In lieu of the provisions of this subpart, authorization and management of access in Alaska, including but not limited to access to inholdings, shall be governed by the applicable provisions in 43 CFR part 36.'' Additionally, it was recommended that the final regulations should clarify that the only operations permit that would be required with regard to access across the NWRS associated with oil and gas development activities on private inholdings in Alaska would be a right-of-way issued pursuant to title XI of ANILCA and the regulations at 43 CFR part 36.

Service Response: We agree with the many comments we received that our rule was unclear about how this rule applies to operations in Alaska. After careful consideration of comments received on this issue, the Service has concluded that the rule does not need to include operations in refuges in Alaska as the existing Departmental regulations implementing section 1110(a) of ANILCA, access to inholdings, provide sufficient protection of refuge resources and use. The Service has revised § 29.41 ''When does this subpart apply to me?'' to clarify that the rule does not apply to operators in Alaska. In addition to this revision, the Service has removed any reference to ANILCA in other provisions of this rule. The specific references in various parts of the proposed rule were more confusing than helpful.

Refuges in Alaska will continue to be governed by title XI of the Alaska National Interest Lands Conservation Act (ANILCA; 16 U.S.C. 410hh–410hh–5, 16 U.S.C. 3101 *et seq.,* 43 U.S.C. 1601 *et seq.*), and the Department's implementing regulations and standards found at 43 CFR part 36. Additionally, section 22(g) of the Alaska Native Claims Settlement Act of 1971 (ANCSA) (43 U.S.C. 1601–1624) and its implementing regulations found at 50 CFR 25.21 will continue to apply to lands conveyed to Alaska Native Corporations that are within the boundaries of a National Wildlife Refuge in existence on the date of enactment of ANCSA. However, the performance-based standards outlined in this rule may be used, as appropriate, as guidance in determining how an operator would meet the various requirements of ANILCA and ANCSA to protect refuge resources and uses. ANILCA provides the Service with the authority to ensure that operators accessing non-Federal mineral rights underneath refuges in Alaska must work cooperatively with the Service through a permitting process outlined in section 1110 and 43 CFR part 36 to avoid or minimize impacts from these operations to refuge resources and uses. For example, under the ANILCA regulations, the Service may require an operator to: Obtain a permit for

operations on federally owned surface estate; provide the Service with financial assurance; restrict the time, place, and manner of activities as necessary to protect refuge resources and uses; and ensure the operation is properly plugged and reclaimed after production operations are complete.

12. *Comment:* The Service also received comments asking to further clarify that this rule would not be used to regulate activities conducted on Alaska Native Corporation (ANC)-owned or other non-Federal lands in Alaska.

Service Response: The scope of this rule is limited to activities on Federal lands within the National Wildlife Refuge System. In the case of refuges in Alaska, it does not apply to inholdings or non-Federal adjacent lands. Commenters generally seemed to be clear about the scope of this rule on this point, and, therefore, the Service concludes it does not need to clarify this further in the final rule. As discussed above, access through refuges to ANC-owned or other non-Federal lands in Alaska will continue to be governed by ANILCA, ANCSA, and their implementing regulations.

13. *Comment:* The Service also received comments recommending that the Service clarify further how the operations standards outlined in the proposed rule would apply to operations under an ANILCA permit. Based on concern about how some of the standards would further limit landowners' ability to specify route or method of access and, therefore, diminish their rights to adequate and feasible access to inholdings as authorized under ANILCA, these commenters asked that the Service not apply these operation standards to operations in Alaska. On the other hand, the Service also received comments asking that the final rule avoid citing specific sections of the operating standards that may apply to operations under an ANILCA permit, because doing so would raise doubts about the application of the rest of the rule to these operations (see 80 FR 77206; December 11, 2015).

Service Response: As discussed above, this rule does not apply to oil and gas operations in Alaska. However, the Service has developed these operating standards through a thorough analysis of what is needed to properly protect refuge resources and uses. Therefore, to the extent consistent with these existing ANCSA and ANILCA regulations, the Service may use these standards as guidance in approving operations and issuing permits under existing regulations applicable to Alaska. The standards that will be applicable will be determined on a case-by-case basis and will only be used if consistent with the standards outlined in ANILCA and its implementing regulations.

14. *Comment:* Other commenters recommended that the Service apply the rule more comprehensively to operations in Alaska, believing that ANILCA is not sufficient at protecting NWRS resources and uses from impacts of oil and gas operations.

Service Response: The Service has concluded that ANILCA provides sufficient regulation of oil and gas operations in Alaska where the Service has been able to effectively work with operators to minimize or avoid impacts to refuge resources and uses while providing operators access to their minerals under the existing regulations. As discussed above, implementation of the existing ANILCA regulations provides stringent protection of refuge resources and uses and provides the Service the appropriate tools for regulating non-Federal oil and gas operations on refuge-administered surface estate. As one commenter suggested, if the Service does, in the future, decide we need different tools to effectively manage oil and gas resources in Alaska, we can propose revisions to the ANILCA implementing regulations.

15. *Comment:* The Service received a comment highlighting the fact that the statutory authority and obligation to review and approve geological and geophysical exploration plans per section 1002 of ANILCA (16 U.S.C. 3142) (and associated regulations at 50 CFR part 37) has expired (see Memorandum Decision and Order, U.S. District Court for the District of Alaska *(State of Alaska* v. *Jewell, et al.* Case No. 3:14-cv–00048–SLG)), and recommending that the final rule should clarify that the Service cannot accept further applications for geological or geophysical exploration for oil and gas in the coastal plain of the Arctic Refuge. The comment also recommended that the final rule should also explicitly mention prohibitions on oil and gas leasing, development, and production in the Arctic National Wildlife Refuge (16 U.S.C. 3143).

Service Response: The Service agrees that we cannot accept any further application for geological or geophysical exploration in the coastal plain of the Arctic National Wildlife Refuge and that oil and gas leasing is prohibited in the refuge for the reasons stated in the comment; however, the recommended revisions are not necessary in the final rule because they are outside the scope of this rulemaking.

Existing Production Operations Under a Service Permit

16. *Comment:* The Service received comments that the proposed rule was unclear as to which provisions of this subpart applied to existing operators under a Service-issued permit.

Service Response: The Service agrees with the commenter that the proposed rule was not clear as to which provisions of the rule applied to existing operators with a Service-issued permit. For operations being conducted under § 29.43, all administrative or operational requirements that are specific to obtaining or operating under an operations permit issued under this subpart do not apply. The operator with an existing permit may continue to operate under the terms and conditions of that Service-issued permit, unless the operator proposes to modify its operations or propose new operations not covered by the existing Service-issued permit, such as plugging and reclamation. If an operator wishes to modify their operations or proposes new operations outside the scope of their existing Service-issued permit, the permit will need to be amended such that any modification or new operation meets applicable operating standards of the rule. We have revised § 29.43 accordingly.

17. *Comment:* Several commenters recommended that operators conducting production operations under a currently approved special use permit should be required to obtain a new permit under the proposed rule, as the Service considered in Alternative C of the DEIS, to ensure that they are following certain performance-based standards regarding waste management and disposal, leaks, spills, and pits.

Service Response: The Service has been very successful at working with operators through these Special Use Permits (SUP) to ensure that impacts to refuge resources and uses are avoided and minimized. As explained above, the Service has concluded that a new permit requirement for these existing operations would bring little to no beneficial impacts to refuge resources and uses, and would impose an unnecessary administrative burden on the Service and operators by requiring a new permit to replace the existing permit. In issuing permits to existing operators, the Service considered and included many provisions to protect refuge resources and uses, such as waste management and disposal, spill prevention, and spill response. Some SUPs have authorized the creation of reserve pits, while others have prohibited them. Such inconsistency in

the future has been addressed and eliminated by this rule. The Service has decided that requiring these operators to get a new permit is not reasonable or appropriate, considering that these operators have been cooperative in working with the Service to protect refuge resources and uses and have reasonable expectations from their work with us that the operations permitted by the Service in their SUP are sufficient. However, as discussed above, any modifications to their operations or proposals for new operations not covered by the original permit are subject to all applicable requirements of part 29.

Also, the Service has further clarified in § 29.43, as discussed above, that an existing operator must comply with the Service's plugging provisions at §§ 29.180 and 29.181. Some commenters stated there should be a clear requirement for operators with an approved SUP to provide financial assurance prior to proceeding with plugging and reclamation. The Service's intent under § 29.43 is to allow operators who have cooperated with the Service in conducting activities under a Service-issued permit to continue under the terms and conditions that have been agreed upon. While financial assurance would provide the benefit of ensuring the public does not become responsible for plugging and reclamation costs should an operator default or abandon their operation, based on the knowledge and experiences of current and past refuge managers engaged in oil and gas oversight, we were not able to identify any well becoming orphaned by an operator within the past 20 years. Therefore, the Service declines to add a financial assurance provision at great cost to these operators with little benefit to refuge resources and uses. However, if an operator's original permit did not include authorization to conduct plugging and reclamation, the operator would be required to amend their Service-issued permit or obtain a new operations permit, either of which requires compliance with the plugging and reclamation provisions of this rule, including providing financial assurance.

Pre-Existing Operations

18. *Comment:* The Service received several comments suggesting the Service clarify how pre-existing operations would be subject to provisions of the rule absent a new permit requirement. One commenter expressed concern that the proposed rule did not include a mechanism for ensuring pre-existing operations are following the requirements of the rule. Additionally, commenters wanted more clarity as to what general terms and conditions apply to pre-existing operations.

Service Response: The Service agrees that the rule should further clarify which provisions of the subpart would apply to these classes of operations. For operations being conducted under § 29.44, all administrative or operational requirements that are specific to obtaining or operating under an operations permit issued under this subpart do not apply unless the operator chooses to obtain a new operations permit instead of amending their existing permits under the terms and conditions of that permit. We have made this clarification in the rule at § 29.44. Additionally, we agree the language needs to be clearer as to the plugging and reclamation responsibilities of a pre-existing operator. After production operations have been completed, a pre-existing operator must obtain an Operations Permit from the Service, either to maintain the well in shut-in status or to plug and reclaim operations in compliance with this subpart. The Service has made this clarification in § 29.63. Finally, the Service has made specific revisions to the rule at § 29.64 that identify the specific ''General Terms and Conditions'' applicable to pre-existing operations.

The Service has concluded it does not need to impose a permit requirement on pre-existing operators in order to notify them of the applicable requirements of the rule or to ensure they are in compliance with its requirements. The Service has a duty to ensure that all pre-existing and existing operators are notified of the requirements of the rule. The Service is working on guidance documents for all classes of operators, including pre-existing operators. Additionally, the Service has already developed relationships with many of the pre-existing operators. The Service will be in contact with operators to ensure they are informed about the requirements of the rule.

19. *Comment:* Some commenters agree with the Service's proposed approach not to require operations permits for pre-existing operations during the production phase. Other commenters believe that pre-existing operations should be subject to the same requirements as new operations under the rule (as the Service considered in Alternative C of the DEIS), specifically requiring a new permit for pre-existing operators that would ensure that they are following the applicable performance-based standards of the proposed rule, including waste management and disposal, spill prevention and response, and the general prohibition on the use of pits, for example; and/or obtaining financial assurance for the full cost of plugging and reclamation during the production phase.

Service Response: After weighing the comments on both sides of the issue, the Service has decided to continue the approach outlined in the proposed rule that a pre-existing operator not be required to get a permit or post financial assurance during the production phase of its operation. In the cost-benefit analysis and environmental impact statement, the Service evaluated the range of alternatives related to the management of pre-existing operations from no additional regulatory oversight to full regulatory oversight. The Service did identify unnecessary impacts to refuge resources and uses related to the ongoing production phase of pre-existing operations, but also recognized the potential to apply a different, more efficient approach to address many of the refuge resource and use issues for this class of operation.

The primary issue with pre-existing operations, as identified by refuge managers, is that reclamation has not been typically or consistently performed in a way that restores disturbed areas to productive habitat. This issue is addressed by the rule. First, in accordance with § 29.63 (which has been revised to clarify), after production operations have been completed, a pre-existing operator must obtain an Operations Permit from the Service, either to maintain the well in shut-in status or to plug and reclaim operations in compliance with this subpart, including the requirement that an operator obtain financial assurance at this time. Second, a pre-existing operator is subject to the reclamation standards of § 29.117(d), which provides for removing all above-ground structures, equipment, roads, well pads, and contaminating substances, reestablishing native vegetation, restoring conditions to pre-disturbance hydrologic functions, and restoring disturbed areas to productive habitat.

Our analysis found that the Service could eliminate many of the ongoing, unnecessary impacts to refuge resources and uses resulting from the production phase of pre-existing operations by making violation of non-conflicting State laws and regulations relating to oil and gas operations a prohibited act in the rule. Though not required to obtain a Service operations permit during production, the Service would have greater authority to ensure these operations are in compliance with applicable laws because Refuge Law Enforcement would be able to enforce

State law on the NWRS. Any violation of State laws on the NWRS would constitute a violation of the law under the rule, and all applicable penalties and prohibitions would apply.

State laws usually address ongoing impacts from these pre-existing operations, such as waste disposal and prevention and cleanup of leaks and spills. Where an individual State's regulations do not specifically address an issue, the Service would continue to work cooperatively with State agencies and operators to reduce impacts or risks to refuge resources and uses. For example, in an assessment of State regulations conducted by the Ground Water Protection Council (GWPC) for the U.S. Department of Energy (DOE), the GWPC found that 23 of 27 oil-producing States assessed required oil production site storage tanks to have secondary containment dikes to contain leaks and spills (GWPC 2014). Additionally, the GWPC (2014) reported that 23 of the 27 States require reporting and remediation of spills and 13 of the 27 States specify cleanup standards for spills. Some States also have siting or setback requirements for pits (production skim pits and reserve pits) with some States prohibiting the use of pits in 100-year floodplains or in areas with shallow aquifers (GWPC 2014). An operator's compliance with these types of laws and the Service's ability to assist in the enforcement of these laws would provide additional protection to refuge resources and uses.

While full regulation of pre-existing operations during their production phase would provide some additional protection to refuge resources and uses, it would not be able to remedy a majority of the impacts to refuge resources and uses caused when the operators chose the time, place, and manner of these pre-existing operations. For example, on existing operations, the operator's well has already been drilled and the area of operations (access route, well site, production facilities, and routes for gathering lines) were established, and impacts to refuge resources, such as geology and soils, wetlands, and wildlife-dependent recreation, occurred prior to the acquisition of a refuge. The Service could require actions not addressed by applicable State rules—site maintenance for erosion control, vegetation management, noise abatement, housekeeping, for examples—by imposing a permit requirement and undergoing the associated administrative processes and costs. Our analysis estimated that approximately 4,000 wells operated by perhaps 400 different operators would fall under the operations permit requirement. Many wells could be grouped under a single operations permit by an operator, but the volume of operations permit applications required would likely exceed 1,000. The Service would need to roughly double its oil and gas management resources from current levels, while the administrative costs to operators of pre-existing wells is estimated to be approximately $1,800 per well.

Based on our analysis, we determined enforcing a pre-existing operator's compliance with State laws and regulations best meets the purposes and needs of revising the existing rule and will provide the maximum protection of refuge resources when balanced with the cost to operators and to the Service for administration. This approach enables managers to focus limited resources on those operations with the greatest possible impacts to refuge resources and uses rather than an indiscriminate administration of permits for the approximately 4,000 pre-existing operations. Comments from the public have not provided us with substantial new information that would change our analysis or conclusion.

20. *Comment:* The Service received a comment requesting that we revise the definition of ''modification,'' so that a pre-existing operation must obtain a permit when they transfer operators.

Service Response: After considering this comment, the Service agrees that a change in operator should trigger the requirement that the new operator obtain an Operations Permit from the Service. However, revising the definition of modification is not the best way to accomplish this objective. Instead, the Service has revised the rule language to replace ''operation'' with ''operator'' in § 29.44 to clarify that the exempt status follows an operator not an operation. Also, in § 29.171, we have included language that would allow an operator to continue operations for 90 days while the operator files the permit application and posts bond to ensure continuity of new operations. The new operator would need to obtain an Operations Permit that meets operating standards and general terms and conditions of the rule, including posting of financial assurance. The Service will not require a change in the time or place of these operations, but rather will ensure that any ongoing unnecessary impacts from these operations are avoided or minimized by requiring the new operator to employ ''technologically feasible, least damaging methods'' moving forward. This change in what constitutes loss of pre-existing status ensures that more operations on the NWRS will be operating under Service standards sooner, and provides greater protection of refuge resources and uses from the ongoing unnecessary impacts of pre-existing operations.

21. *Comment:* We received comments from the public requesting that the rule require more than just basic information from pre-existing operators on refuge lands (*e.g.,* mitigation, spill control, emergency preparedness plans). Commenters stated that the Service should require other important information necessary for the proper management and conservation of refuge resources from these pre-existing operators. For instance, one comment suggested that the Service's requirement in proposed § 29.61 for a scaled map that delineates only an ''area of operation'' may not be sufficiently detailed to provide refuge managers with baseline information to monitor operations, changes in operations, and violations, and that the Service should require a scaled map, as well as detailed schematics of existing wells and infrastructure.

Service Response: After further considering these comments, the Service has concluded that some additional, basic information from pre-existing operators would enhance the protection of refuge resources through better documentation of the equipment, materials, and operational practices being used on location. Additional operational information will also help to establish an operator's reclamation responsibilities as well as a baseline for determining whether future actions constitute a modification as defined under § 29.50. Therefore, the Service has amended the rule at § 29.61 to require pre-existing operators to also submit to the Service: a brief description of the current operations and any anticipated changes to the current operations, including documentation of the current operating methods, surface equipment, and materials produced or used.

22. *Comment:* Some commenters requested that the Service delete the phrases ''subject to the provisions of this subpart'' and ''subject to applicable requirements of this subpart'' from proposed §§ 29.43 and 29.44, believing that subjecting pre-existing operations and existing operations currently under a Service permit retroactively was inappropriate.

Service Response: In developing the rule, the Service identified several key objectives that needed to be addressed in considering the extent to which to regulate pre-existing operations and operations already being conducted

under Service authorization. These objectives included that: (1) These operations not create additional unnecessary impacts on refuge resources and uses; and (2) all operations within refuges are eventually plugged and reclaimed to Service standards. Pre-existing operations and existing operations are subject to specific provisions of this rule that ensure that these objectives are met and that future activities of these operators do not result in additional, unnecessary impacts. Therefore, subjecting these operations to these provisions is not inappropriate, as the commenter suggested, because the provisions are not focused on retroactively regulating past activities and impacts of these operations (*i.e.,* time, place, or manner of operations) but rather on regulating new or modified activities and impacts of these operations.

Financial Assurance

23. *Comment:* Some commenters expressed the desire that the Service go beyond what was in the proposed rule and periodically review reclamation costs and corresponding requirements for financial assurance, and update these estimates as necessary to accurately reflect the cost of reclamation upon the decommission of the well.

Service Response: The concern that financial assurance amounts will become outdated and insufficient to ensure reclamation was already addressed in proposed § 29.152, which we, therefore, have not revised. The Service may require, or the operator may request, an adjustment to the financial assurance amount because of any circumstance that increases or decreases the estimated costs of plugging and reclamation. Cost changes due to inflation would be a circumstance that would allow the Service to require an adjustment in the amount of financial assurance.

24. *Comment:* The Service also received comments that requiring financial assurance above and beyond financial assurance already required by the State is not necessary because the State bonds are sufficient. Commenters stated that this additional financial assurance requirement was ''unfair and unreasonable,'' and should only be done on a case-by-case basis as necessary to supplement bonds already lodged with the State.

Service Response: The Service's rule does not rely on State bonds to ensure timely well plugging and site reclamation to Service standards for two primary reasons: (1) Bonds furnished to operators by the State are not usually directly available to the Service to plug and reclaim that particular site; and (2) State bonding programs do not typically require well plugging and reclamation to Service standards. State bond amounts are generally insufficient in themselves to cover the actual costs of plugging and reclamation. However, States administer well plugging funds with money derived from sources other than forfeited bonds, *e.g.,* permitting fees, taxes on production, or penalties. Most States with regulations overseeing oil and gas activities have developed programs for plugging and reclaiming orphaned wells, and, theoretically, the State may have sufficient funds to plug and reclaim orphaned wells on the NWRS. However, many State programs remain backlogged with a number of orphaned wells that need to be plugged or reclaimed.

Orphaned wells on Federally managed lands do not usually rank as top priorities on State lists for plugging. (Office of Inspector General, Report No. CR–EV–FWS–002–2014: Oil and Gas Development on U.S. Fish and Wildlife Service Refuges). So the bond that an operator furnishes to the State is often not available to ensure that wells are plugged and areas of operation reclaimed in the event of operator default or abandonment of the operation. Even where a State may expeditiously address plugging of an orphaned well on a refuge, State plugging programs typically do not require restoration of a site in a manner that meets Service standards in the rule (§ 29.117(d)). For these reasons, State bonds are typically not sufficient to ensure protection of refuge resources in the event that an operator defaults or abandons his or her operation.

However, in the event that a State and the Service were in formal agreement that State plugging funds would be used to plug a well directly upon its becoming orphaned as well as to conduct site reclamation, the Service would consider this to be a condition under § 29.152 that would justify reducing the financial assurance required by the Service.

Modification of Operations and Permits

25. *Comment:* The Service received several comments requesting clarity of the proposed rule's definition of ''modification'' (proposed § 29.50). Some commenters wanted the Service to clarify the definition to ensure it includes certain changes. Specifically, one commenter suggested the Service amend the definition to read: ''Examples of a modification could include, but are not limited to, drilling additional wells from the same pad, conducting hydraulic fracturing or other well stimulation activities, creating additional surface disturbance (expanding the footprint of a well pad, realigning a road, constructing new pipelines or gathering lines), or converting a natural gas well into a wastewater disposal well so that the resulting modification has notable impacts to the refuge resource.''

Service Response: The Service agrees that many of the examples listed by the commenters require a pre-existing operator to obtain a new permit or an operator under an existing Service-issued permit to obtain an amendment to its permit, including drilling additional wells from the same pad, conducting hydraulic fracturing or other well stimulation activities, creating additional surface disturbance (expanding the footprint of a well pad, realigning a road, constructing new pipelines or gathering lines), or converting a natural gas well into a wastewater disposal well, will also likely be considered ''modifying'' an operation. The Service had identified several examples in the preamble of the proposed rule, and examples of a modification include drilling additional wells from the same pad, creating additional surface disturbance (*e.g.,* expanding the footprint of a well pad, realigning a road), or converting a natural gas well into a wastewater disposal well, as these modifications will have impacts beyond the scope, intensity, and/or duration of existing impacts. This provision was not intended to apply to minor actions, such as repositioning of surface facilities within the current footprint of pre-existing operations, minor changes in color schemes, or minor, non-routine maintenance actions.

The Service has decided it is not necessary to revise the definition of ''modification'' in the rule to include these specific examples. Instead, these examples and others the Service develops in the future will be included in guidance documents provided to pre-existing operators and holders of existing Service authorizations as well as Service staff who will administer the rule.

26. *Comment:* Another commenter recommended two changes to the regulations addressing modification of existing operations. First, the commenter asked the Service to add the word ''significant'' before ''additional impacts'' in the definition for ''modifying.'' This change would clarify that modified permits are not (and should not be) required for minor modifications to operations that do not result in significant changes in effects to the environment. Second, proposed

§ 29.160 should be modified to clarify that the Service may amend a permit only when there is a ''significant'' or ''substantial'' modification to the permitted operation.

Service Response: The Service considered the addition of the word ''significant,'' as well as other adjectives to provide more clarity for what the Service would consider to be a ''modification.'' However, we decided that adding any such language was not useful, because such terms themselves remained subject to various interpretations. For instance, an operator, the Service, or a non-governmental organization or individual may have very different beliefs as to what constitutes a ''significant'' impact to refuge resources and uses. Therefore, we have provided several examples of what would likely constitute a modification (see above) to provide some clarification to our intentions in regulating modifications, and as previously stated we will provide further guidance documents for this purpose. However, determining whether a change is a ''modification'' of the operation must be done on a case-by-case basis because the details of when, where, and how such changes are accomplished will determine whether such a change is ''beyond the scope, intensity, and/or duration of existing impacts.'' Therefore, the Service did not revise the rule as suggested by this comment.

Performance-Based Standards

27. *Comment:* The Service received conflicting comments regarding our proposed approach of regulating oil and gas operations based on performance-based standards. Some commenters requested that the Service require prescriptive actions, at least in some instances. For example, one commenter suggested the general reclamation standard to ''remove or neutralize contaminating substance'' (§ 29.117(d)(3)) be modified to include a strict prohibition of onsite remediation of contaminants. Also, the Service received comments that these performance-based standards leave too much discretion to the Service to either be too lenient with operators or too strict.

Service Response: Pursuant to Executive Order 12866 (58 FR 51735), ''[e]ach agency shall identify and assess alternative forms of regulation and shall, to the extent feasible, specify performance objectives, rather than specifying the behavior or manner of compliance that regulated entities must adopt'' (E.O. 12866(b)(8)). Consistent with the direction provided in E.O. 12866, and as stated in the proposed rule, the rule is based on performance-based standards rather than prescriptive operating standards. A prescriptive standard may seem stricter because it ensures that an operator follows a certain practice that seems like it would protect refuge resources and uses and allows the operator no flexibility to use a less-protective standard. However, in implementation, these standards can, in some instances, have the unintended consequence of actually being more harmful to refuge resources and uses. For example, onsite remediation of a hydrocarbon spill may result in less overall impacts or risks of impacts by reducing heavy truck traffic than a prescriptive standard of requiring offsite removal of soils, which also increases the potential for introduction of invasive plant species associated with import of new fill material. The flexibility for refuge managers and operators to accomplish a desired end allows site-by-site evaluation of alternatives that are least damaging overall. Additionally, science and technology are constantly advancing, and new methodologies used today are much more environmentally protective than those available only a few years before. If these trends continue in the future, the performance-based standards in the rule easily adapt to those changing methodologies and will be at least as effective in the future as they are today.

In response to comments that using performance-based standards leaves too much discretion to the Service, this rule will be accompanied by detailed guidance for both operators and Service staff on what are current best management practices for meeting these standards. This guidance will provide consistency of interpretation and application of the standards across the NWRS and decrease the possibility that the discretion afforded refuge managers will be misapplied. Furthermore, through compliance with the National Environmental Policy Act (NEPA) process at the site-specific permit level, the public will have the opportunity to review and comment on Service proposals.

28. *Comment:* Other commenters were generally supportive of the more flexible approach, but recommend that the Service remove what they saw as more prescriptive standards in the rule in favor of more general goals to be achieved. For example, a commenter recommended removing the proposed regulations requiring the installation and maintenance of secondary containment, applying seasonal restrictions, and specifying the location, type, and design of facilities (proposed §§ 29.111–29.119) as unreasonable, burdensome, and unlawfully diminishing the value of the mineral estate. The commenter suggested that the Service replace these standards with more general goals to be achieved to ''the extent technologically and economically feasible, and a requirement to use best management practices.''

Service Response: The Service recognizes that some arguably prescriptive management practices are included in the suite of performance-based standards. The observation that an operator must install and maintain secondary containment is a good example (§ 29.111(b)). In part, the provision is prescriptive, but acknowledges the widespread use of the best management practice of secondary containment by industry and regulatory agencies to capture spills, prevent their spread, and facilitate their cleanup. In this instance, the Service does not envision any alternatives that would exclude the use of secondary containment and still meet the ''technologically feasible, least damaging method'' standard, and so the provision serves to inform operators and the public of an aspect of the rule's approach to managing contaminating substances. Additionally, the requirement still leaves flexibility for the refuge manager and operators to decide on the design and operation of the secondary containment system. Similarly, in a few other instances the Service has included practices that we find to be more informative but which may be seen as somewhat prescriptive; however, we have maintained flexibility for site-specific implementation. The rule includes the necessary general goals applied with the overall standard of technologically feasible, least damaging methods. The rule will result in best management practices being identified and included in the site-specific operations permit.

29. *Comment:* One commenter asked whether what is practical for a particular operator would be a consideration in what is ''technologically feasible, least damaging methods.''

Service Response: While we do consider economics in determining appropriate methods, we look at what is feasible in terms of industry-wide practice, not what is affordable for a specific operator. The Service does not intend to allow operators to use methods that unreasonably harm refuge resources and uses just because the operators don't have the adequate financial resources to employ

technologically feasible, least damaging methods.

30. *Comment:* The Service also received a comment that it does not have the authority to permit only the ''least damaging'' operational methods and that the Service's use of the term ''technologically feasible, least damaging methods'' is not appropriate and should be replaced with ''feasible methods'' that are technologically and economically feasible, as determined by the best industry practices available. This commenter contended that the Service may only recommend, not require, the ''least damaging'' methods, stating that the mineral interest owner is not required to conduct its operations in a manner that is not economically or technologically feasible in order to access its mineral rights.

Service Response: The Service has considered this comment and does not agree. First, we note that NPS has in fact used this standard for new operations since January 1979. This term, defined at § 29.50, ensures that the Service does not go beyond what is technologically feasible in the methods required of an operator and considers the industry-wide economics of those methods in making those decisions. It also ensures that an operator uses those methods that are least damaging of refuge resources and uses, which is a responsibility of the Service to maintain under the NWRSAA. Therefore, the Service concludes that requiring ''technologically feasible, least damaging methods'' is well within the authority of the Service.

31. *Comment:* The Service received several comments recommending that the Service remove any ambiguous language contained in the proposed rule, including the term ''greatest extent practicable'' found at proposed § 29.32. Commenters were concerned that such language would allow the operators the unnecessary ability to pressure the Service into allowing methods that are based more on economic factors rather than NWRS resource and use protection.

Service Response: In response to these comments, the Service went back to the regulations to review for any ambiguous language. The Service did use these terms quite frequently in the preamble to the proposed rule where it outlined the Service's general intent regarding the proposed rule. The Service has avoided using such ambiguous terms in the preamble to the final rule. When the Service reviewed the proposed rule text in consideration of this comment, we found that the term ''greatest extent practicable'' only appeared at § 29.32, which is a revised version of a general policy statement of the Service related to managing all non-Federal mineral rights. This language remains from the previous regulations found at § 29.32 and pertains to rights other than oil and gas rights, so the Service decided not to revise this language at this time. Other than this section, the Service found one other instance of ambiguous language in the proposed rule (see in proposed § 29.111(g) ''to the extent reasonably practicable'') and has removed such language.

Timeline for Approval

32. *Comment:* The Service sought comment on whether the 180-day timeline for final action is reasonable. The Service received some comments stating that this timeline was too long for operators to wait to get authorization on their permits. Other commenters suggested that this timeline was too short and would hinder the Service's ability to fully comply with NEPA requirements.

Service Response: The Service has considered these comments, but has determined that the timeline from the proposed rule should be maintained in the final rule. The timeline does provide for hard deadlines and limits the Service's discretion to delay the processing of Operations Permit applications. For instance, under the rule, the Service has 30 days to conduct its ''initial review'' to determine whether an operator's application is complete, request more information from the operator, or inform the operator that more time is necessary and provide written justification for the delay. Once the application is deemed complete, the Service must generally take final action within 180 days. Any additional time after the 180 days may be taken only if the operator agrees to additional time, or that time is necessary for the Service to comply with applicable laws and regulations. The Service's purpose in using the 180-day timeframe is to provide operators with greater certainty regarding the permitting process. While the Service cannot always guarantee meeting this deadline and has, therefore, provided an extension provision in the rule, it is the Service's intention to process these permits as quickly as possible and not unreasonably impede a private mineral rights owner's right to access those minerals.

33. *Comment:* One commenter recommended that the Service add a provision to the regulations that would provide a Categorical Exclusion under NEPA for permits issued under this subpart and additionally include a provision that compliance with the terms of the permit is ''deemed to be not likely to adversely affect any species listed under the federal Endangered Species Act.''

Service Response: The Service declines to adopt the commenter's recommendation because it is beyond the scope of this rulemaking and we do not currently have the record that we would need to demonstrate to the Council on Environmental Quality to establish a new categorical exclusion. As the Service gains experience in implementing the rule, we may find that it is appropriate to pursue adoption of a new categorical exclusion. Similarly, with respect to the inclusion in the rule of a provision regarding compliance with the Endangered Species Act (ESA), we are unable to accept the recommendation because such determinations must be made on a case-by-case basis in compliance with section 7 of the ESA (16 U.S.C. 1531 *et seq.*).

Information Requirements and Public Access to Information

34. *Comment:* The Service received some comments that the proposed information requirements for permit applications (50 CFR 29.94–29.97) were extraordinarily extensive and unduly burdensome. These commenters believed that these sections, as well as § 29.121(f), also unlawfully require the disclosure of confidential and/or proprietary information and requested that any provisions requiring the disclosure of such information be removed. These commenters also requested that the Service scale down information requirements to only the basic information needed for the Service to assess the location and type of operations that will be undertaken.

Service Response: The Service carefully considered what information was necessary from operators so that the agency could properly administer non-Federal oil and gas activities on the NWRS and ensure that operators avoid or minimize impacts to refuge resources and uses. We analyzed each of the information requirements in compliance with the Regulatory Flexibility Act to ensure that the benefit of these information requirements to NWRS resources and uses were appropriate based on the administrative costs to the operator and the Service, and we concluded that all information requirements in the rule are appropriate. Furthermore, we understand that information requirements can be burdensome on operators, so in instances where the Service needs information gathered in compliance with other Federal or State laws under this rule, the Service does not require an

operator to duplicate that information but rather provide the Service copies (see, *e.g.,* §§ 29.61(d), 29.121(g)).

35. *Comment:* Commenters suggested that the Service information requirements are inadequate because they do not require full disclosure of chemicals used for hydraulic fracturing prior to obtaining a permit. They questioned how the Service could do a full analysis of the environmental risks of a hydraulic fracturing operation if they did not have all of the information regarding chemical uses by the operator. Commenters also stated that proposed § 29.210 would allow operators to avoid any obligations to disclose the identity of fracking chemicals used simply by submitting nothing more than an affidavit in support of their claim that the information is confidential and the Service would have no power to disclose the information to the public if the operator were to provide it.

Service Response: While an operator will be able to provide an affidavit to support the protection of proprietary or confidential information, an operator still must provide the Service any information the agency needs to fully assess the environmental impacts of an operator's activities, including all chemical uses in the operation. Information requirements included under § 29.95(p) include identification of contaminating or toxic substances used or expected to be encountered during operations, including material safety sheets. In the rule, the Service also used the ''including, but not limited to'' term in the list of information requirements to reserve the ability to require additional information (see § 29.96) if necessary.

The information requirements of § 29.95(p) provide the Service with the necessary information upfront to sufficiently analyze the environmental risks of a hydraulic fracturing operation and to ensure that operators are following best management practices for storing and removing these chemicals. The post-operational chemical disclosure information that operators commonly provide via FracFocus is for the different purpose of identifying specific sources of contamination and responsible parties should contamination occur.

36. *Comment:* One commenter requested the Service provide an easy way for the public to access information about proposed operations and report perceived violations, including the option for anonymity to encourage workers and others with sensitive positions to report problems.

Service Response: The Service's approval of any proposed operations on the NWRS will be done in compliance with NEPA, and the Service will provide the public with information about proposed operations and the opportunity to participate as afforded by that Act. As for reporting perceived violations, contact information for each refuge is readily available and is the fastest and most efficient way of notifying the Refuge of any perceived violations. We encourage the public and workers to contact that refuge with any concerns they may have regarding perceived violations by these operators. Such information can be provided to the refuge anonymously through letters, phone calls, or any other means that will allow an individual to feel comfortable doing so.

Penalty and Enforcement Provisions

37. *Comment:* The Service received several comments recommending that the final rule provide for robust enforcement of rule requirements and include specific penalties for non-compliance. For instance, commenters requested specific provisions regarding notifying and working with operators to bring them into immediate compliance; issuing formal written notices of non-compliance; specific penalties for non-compliance; seeking civil penalties for failure to comply with a notice of non-compliance; and for more egregious cases, filing a civil action in Federal court seeking an injunction or restraining order to stop damaging operations. One commenter also suggested that the Service adopt NPS current regulations for approval of an operations permit (50 CFR 9.37(a)) believing that the language contained in that section, if adopted by the Service, would provide the Service the ability to deny a permit if it is not protective enough of a refuge.

Service Response: The Service considered these comments, but concluded that modifying our enforcement provisions as the commenter suggested is not warranted. In speaking with Refuge law enforcement, the Department of Justice, and the Solicitor's Office, the Service finds these provisions provide sufficient tools for the Service to ensure compliance with this subpart on penalty and enforcement. Administrative corrective actions are not normally contained within the prohibited acts sections of regulations. The Service would adopt the recommended progressive enforcement action suggested by the comment through Service policy.

Furthermore, the rule provides the Service the ability to deny a permit if the operator does not meet several requirements (§ 29.103). The Service finds that these requirements are both more specific and clearer than the language suggested by the commenter. These requirements have been carefully crafted to ensure that the Service's approval (or denial) process for an Operations Permit meets the objectives of the rulemaking to ensure operations avoid or minimize impacts to refuge resources and uses.

38. *Comment:* Additionally, a commenter requested that the Service provide further clarity on how prohibited acts and penalties apply to pre-existing operations and recommended that violation of the informational requirements, modifications, reclamation, general terms and conditions, and other operational requirements in §§ 29.60–29.64 be added to prohibited acts and penalties for pre-existing operations at § 29.190.

Service Response: The Service agrees with the commenter that the proposed rule could have been clearer as to which provisions apply to pre-existing requirements or not and has revised the rule accordingly at § 29.60 through § 29.64 and § 29.190. A violation by a pre-existing operator of informational requirements, modifications requirements, reclamation requirements, and applicable general terms and conditions is considered a prohibited act and subject to applicable penalties.

Appeals

39. *Comment:* The Service received comments that the two-tiered appeals process proposed in the regulations is unreasonable and unduly burdensome. There should be a single, expedited administrative appeal available for challenges to actions taken by the Service under the proposed regulations. This administrative decision should be directly appealable in Federal court.

Service Response: The appeals process outlined at § 25.45 is the process by which the Service currently reviews all appeals of the Service's permit decisions for public uses on refuge lands. The Service will not provide a different appeals process under this subpart, because we find that the current process works well and that the changes requested would lead to less consistency and efficiency for the administration of permits by the Service. The two-tiered appeals process provides additional opportunities to resolve disagreements, while preserving opportunities for judicial review of final agency action under the Administrative Procedure Act. As to the other concern raised by the commenter, we revised § 29.200 to clarify that the decision of

the Regional Director will constitute the Service's final agency action.

Finally, in reviewing the appeals process under the proposed rule as it would relate to pre-existing operations, the Service realized that it needed to revise this section to provide an operator the opportunity to appeal decisions made by the Service that do not apply to a permit granted by the Service and so has added the following provision to § 29.200: ''The process set forth in § 25.45 is to be used for any written decision concerning approval, denial, or modification of an operation made by the Service under this subpart.''

Access

40. *Comment:* The Service received comments requesting the final rule contain a provision stating that the Service cannot place conditions on operations in a permit that only allows an operator to access and traverse Federal lands (*i.e.,* in order to access operations on non-Federal lands).

Service Response: In administering access across Federal lands, the Service is required by law to analyze the impacts of authorizing that access under NEPA. Through that analysis, the Service may find impacts to refuge resources and uses resulting from operations on non-Federal land resulting from the authorization of that access. In those cases, the Service will work with those requesting access across Federal lands to minimize or avoid those impacts, and, if agreeable to both the Service and the operator, those avoidance or mitigation measures may be included in the access permit. However, as stated in the proposed rule and maintained in the rule, the Service has made clear that we are permitting the access and not regulating the operations on non-Federal land. Accordingly, no change in the regulatory text is required.

Fees

41. *Comment:* Some commenters suggested that the Service ensure that they are assessing the appropriate and/or additional fees of operators in order to ensure that the Service has adequate funding to administer these operations. Additionally, the Service received comments stating that the agency should have full authority to charge fees to cover annual inspections as well as any more frequent inspections needed during construction and pre-production activities, as well as for repeat violators or higher risk operations. Commenters recommended that the Service replace ''may'' with ''will'' at § 29.120(c), not understanding why the Service would not charge for the costs of processing and administering temporary access permits and operations permits, particularly in an era of limited agency budgets. Other commenters stated that fees cannot be required for access or administering operating permits that are already within the scope of the operator's oil and gas right or other right provided by law and that there should be no fees for emergency access. Additionally, they stated that if an access fee can be applied, then it must be reasonable and cannot burden the underlying oil and gas right or otherwise diminish the value of the mineral estate.

Service Response: After considering these comments, the Service did not revise the rule with respect to fees charged by the Service for either access or administering operations permits. Related to access fees, the Service is not charging for access that is pursuant to a deeded or statutory right to use the refuge-administered lands without payment, but only for access that is granted as a privilege ''outside the scope of an operator's oil and gas right'' for which the fees are subject to the provisions of the Refuge Revenue Sharing Act (16 U.S.C. 715s). Such access is a special benefit that warrants a user charge commensurate with fees and charges for similar privileges and products made by private land owners in the vicinity or in accordance with local value (see 50 CFR 29.5). In terms of recovery costs of permit administration and operations monitoring allowed under § 29.120(c), the Service uses ''may'' instead of ''will'' to provide flexibility to refuge managers and foster cooperation with operators. In some instances, operators may choose to share the costs with the Service in administering permits in order to expedite the process. For example, an operator may provide funding for a third-party contractor to prepare an environmental assessment for the Service during the permitting process. Periodic and annual inspections are aspects of administering a permit, and charging fees for such activities fall under that section. With flexibility in charging fees, operators and refuge managers may develop a mix of self-reporting and refuge monitoring that reduces administrative requirements on both parties.

Implementation

42. *Comment:* The Service got one comment suggesting that the Service have refuge-specific management plans.

Service Response: The Service appreciated this comment and will further consider it in implementing the rule. The Service already has developed refuge-specific oil and gas management plans through Comprehensive Conservation Plans, Habitat Management Plans, or other planning documents created to manage specific refuges. On refuges where there is the potential of oil and gas development, they include management strategies for these operations. The Service will continue to develop and update these plans as necessary to ensure they are consistent with this rule.

43. *Comment:* Several commenters from industry and non-governmental organizations expressed concern that the Service does not have adequate staffing to properly implement the rule. In particular, some commenters expressed the need to ensure that, along with this rule, the Service has the necessary level of funding, staffing, and training to properly implement the rule, as highlighted by the 2007 Government Accountability Office (GAO) report that assessed the status of oil and gas operations on the National Wildlife Refuge System in 2007. Their report highlighted the inadequacy of the Service's current regulations and, in part, led to the promulgation of these proposed revisions. The GAO stated that ''[w]e recommend[ ] that FWS determine the level of staffing necessary to adequately oversee oil and gas operations and seek the necessary funding to meet those needs through appropriations, the authority to assess fees, or other means.'' The report further stated, ''we recommend that FWS ensure that staff are adequately trained to oversee oil and gas activities'' (GAO–07–829R). One comment requested the Service scale back the rule based on its limited resources. Another comment suggested that this rule may require assessing additional fees on operations, periodically ensuring that fees are adequate to cover the costs of monitoring and enforcement.

Service Response: In crafting the proposed and final rules, the Service carefully considered the administrative burden the rule placed on operators and Service staff and on the resources required by the Service to successfully implement the rule. Therefore, the Service has weighed the cost of administration versus the resource benefits gained from regulation and decided on several occasions that were discussed in the responses to several comments above that the cost-benefit analysis did not support a more stringent regulatory regime. As promulgated, the rule prioritizes and regulates those activities with the largest potential impacts on refuge resources and uses. As discussed above, this is

one of the main reasons the Service for the most part has declined to regulate downhole activities associated with operations and to exempt inholdings and non-Federal adjacent lands from the rule.

The Service currently has dedicated staff that manages oil and gas development on National Wildlife Refuge System lands. This rule brings more consistency and guidance to staff already dedicated to these issues. While there are additional responsibilities involved in processing operations permit applications and monitoring operations, the Service has determined this increase in need can be effectively met with the reallocation of refuge staff and resources. Additionally, the rule contains cost recovery or cost-sharing provisions that help ensure the Service has the necessary resources to implement the rule effectively and efficiently.

Section-by-Section Recommendations

The Service received several other recommendations on specific section revisions to the proposed rule. The Service has considered all of these recommendations and has made changes, as appropriate, to provisions of the rule as discussed below and/or outlined in the table in the section *Changes from the Proposed Rule.*

44. *Comment:* The Service received comments requesting that the definition of ''access'' (proposed § 29.50) be revised so that ''access'' does not include use of an aircraft when the aircraft doesn't take off of or land on Service-administered lands or waters. On the other hand, the Service received other comments recommending that the Service carry over the definition of ''access'' to the final rule, at least subjecting aircrafts landing on non-Federal lands to timing limitations to avoid disturbing wildlife.

Service Response: The Service has considered these comments and has revised § 29.50 to clarify that access does not include aircrafts that both take off from and land on inholdings or non-Federal adjacent lands, because the Service does not have the authority to condition aircraft landings outside of the NWRS.

45. *Comment:* The Service received a comment asking that the Service further clarify the process for authorizing use of water outside of a State right and that it should be done in line with a compatibility determination.

Service Response: The Service has concluded that determining sources of water for use in operations is best evaluated using the procedures and performance standards of the rule. Absent a demonstration by the operator that they have a right to use the water (*e.g.,* State-held water right, specific deed language), water use, transportation, and storage on a refuge would be evaluated for the technologically feasible, least damaging method. Considerations would include, among other things, the volume of water needed, capacity of water sources to meet those needs and resulting consequences on aquatic resources, and transportation and storage methods.

46. *Comment:* The Service received a comment suggesting the definition for ''usable water'' includes water for wildlife purposes so that shallow-water aquifers, seeps, and springs will be protected for wildlife on the NWRS.

Service Response: The definition for usable water does not need to be changed in the rule in order for the Service to protect water for wildlife purposes. The rule includes hydrologic standards (§ 29.113) and fish and wildlife protection standards (§ 29.112), as well as other standards, that serve to maintain water quality and quantity for use by wildlife. The term ''usable water'' is a specific term and definition that has been developed and used by other Federal agencies (*i.e.,* the Environmental Protection Agency (EPA) and BLM) to ensure protection of specific resources that may be impacted by oil and gas operations or other activities. So the Service did not revise this definition.

47. *Comment:* The Service received a comment requesting that the Service remove fuel drums, pipes, oil, contaminated soil, etc., with any residue of oil or hazardous chemicals from the definition of ''waste,'' because they include ''contaminating substances'' and should be defined and treated as such.

Service Response: The Service intends that these terms are not mutually exclusive, and something may be both ''waste'' and a ''contaminating substance.'' An operator must comply with the applicable rule requirements for dealing with each.

48. *Comment:* We received comments requesting that the Service increase the distance an operator is required to place operations away from surface waters from 500 feet to 2 miles based on BLM's determination that ''surface and groundwater contamination, due to oil and gas development . . . occurred between 1,000 to 1,800 feet from . . . drilling'' in Colorado (BLM Grand Junction Resource Management Plan FEIS at 6-271).

Service Response: The Service is aware of this BLM finding, but has concluded that a revision of the rule is not necessary to protect surface and groundwater resources from contamination. The establishment of setbacks of operations from sensitive resources such as surface waters or wetlands is based on common knowledge that providing time and space to react to incidents such as spills or poor operating practices is key to minimizing risks. However, there is no single setback distance that is appropriate for all conditions of proposed activities and environmental conditions. Environmental conditions may provide natural or human-made barriers that would justify a reduced setback. On the other hand, site conditions such as steep slopes or annually high precipitation can enhance pathways between the activity and resource, and thus justify greater setbacks.

Regulatory establishment of a ''good offset'' that considers both the activities and the average environmental conditions provides a beginning point for site location considerations. Additionally, having a regulatory process for adjusting site-specific setbacks—either lower or higher—based on project and environmental conditions is the key to successful use of setbacks. Through the Service's own analysis in the associated EIS, we continue to believe that 500 feet provides the necessary time and space in the majority of circumstances. However, the rule (§ 29.113) appropriately gives the ability to the Service to require an even greater setback if conditions, such as those highlighted by the comment, would justify a greater setback distance. We also recognize that exceptions to the setback are sometimes essential to balancing overall impacts of an operation. A prime example occurs in coastal environments where the practice of locating drilling operations in open water has been demonstrated to be least damaging by avoiding the impacts of cutting and dredging drilling slips and canals into sensitive marshland. Therefore, the Service believes that flexibility in this standard is appropriate and gives the Service the ability not only to ensure the least damaging methods to refuge resources and uses, but also to ensure that an operator has reasonable access to their minerals based on a case-by-case determination.

49. *Comment:* The Service received comments recommending that we include provisions in the final rule that require an operator to collect additional information, such as water and soil samples and wildlife surveys, prior to beginning operations.

Service Response: In response to these comments, it is our intention that reconnaissance surveys will be used to collect this type of information and any other necessary natural and cultural resource conditions the Service deems necessary to ensure protection of refuge resources and uses. We acknowledged above that proposed § 29.94 was not clear, and we have revised the rule to clarify that reconnaissance surveys will be used to collect this type of baseline information.

50. *Comment:* The Service received comments stating that the Service does not have the authority to require mitigation for impacts by mandating that operators provide for ''habitat creation, habitat restoration, land purchase, or other compensation'' and recommending that proposed § 29.120(g) be eliminated from the regulations as it amounts to an access fee that unreasonably and unlawfully restricts access to mineral rights.

Service Response: After considering these comments, the Service has revised proposed § 29.120(g), redesignated as § 29.120(f) in the final rule, to clarify that mitigation tools must be mutually agreed upon by the Service and the operator. The Service believes this provision is within the scope of the Service's authority under the NWRSAA to protect refuge resources and uses, and may in some circumstances be appropriately used by an operator to offset impacts to refuge resources and lost use.

51. *Comment:* The Service received comments recommending that the Service expand the monitoring and reporting requirements. For instance, some commenters recommended that the Service decrease the reporting time from 90 days to 30 days and include explanations of what happened, why it happened, who was involved, the results, and how the company intends to prevent similar incidents in the future.

Service Response: The Service finds that these recommendations are not warranted. This provision in the rule is intended to provide the Service with information about occurrences on the NWRS. Due to the nature of accident investigations and the time it may take to get the official report, we concluded that 90 days is an appropriate timeframe. There are also existing State and Federal laws governing various accident occurrences, and we have determined that additional regulatory provisions are not needed at this time to better enable the Service to protect Refuge resources and uses.

Changes From the Proposed Rule

After taking the public comments into consideration and after additional review, the Service made the following substantive changes in the rule:

§ 29.40	Revised to clarify the scope of this rule as related to Alaska inholdings and waters within NWRS boundaries.
§ 29.41	Revised to clarify that this rule does not apply to operations in Alaska.
§ 29.42	Revised to remove provisions related to operations in Alaska.
§ 29.43	Revised to clarify which provisions of the rule apply to existing operators with a Service-issued permit and to clarify requirements in regards to plugging and reclamation.
§ 29.44	Revised to clarify requirements for pre-existing operators in regard to plugging and reclamation. Also, replaced ''operation'' with ''operator'' to clarify that exemption from a permit requirement applies to a pre-existing operator, not the operation.
§ 29.50	Revised to: (1) clarify that access does not include aircrafts that both take off from and land on inholdings or non-Federal adjacent lands; (2) clarify that the term ''area of operations'' can include pre-existing, proposed, and approved areas; (3) clarify that ''modifying'' applies to a changes in existing operations; (4) remove the definition of right-of-way (ROW) permits as it was only applicable to operations in Alaska.
§ 29.61	Revised to require additional information from pre-existing operators, including a brief description of the current operations and any anticipated changes to the current operations; and documentation of the current operating methods, surface equipment, and materials produced or used.
§ 29.62	Revised to clarify that the requirement to obtain an operations permit for a new operation or a modification will be limited to that new operation or modification, not the entire existing operation.
§ 29.63	Revised to clarify that pre-existing operators must plug and reclaim their operations in compliance with this rule.
§ 29.64	Revised to clarify which additional provisions of the rule would apply to the various classes of operations.
§ 29.70	Removed language regarding operations in Alaska.
§ 29.90	Removed language regarding operations in Alaska.
§ 29.92	Revised to clarify that if an operator is using previously submitted information, they should reference it in the permit application.
§ 29.94	Revised to remove language regarding an unnecessary ROW form; also revised to clarify the Service's authority to require an operator to collect certain natural and cultural resource information if necessary and other minor changes to and deletions of unnecessary language for clarity.
§ 29.101	Removed language regarding operations in Alaska.
§ 29.111	Revised to remove ambiguous and repetitive language and be consistent with the NPS 9B regulations; also added paragraph (h) related to operation setbacks from surface water locations previously found in the hydrological standards section.
§ 29.112	Revised to clarify our standards for protecting wildlife.
§ 29.113(a)	Combined the provision related to operation setbacks from surface water locations with the general facility design and management standard for setbacks from refuge structures or facilities in § 29.111(h).
§ 29.117(d)(5)	Revised to clarify the objective of grading requirements during reclamation.
§ 29.118	Deleted provisions related to geophysical operations in Alaska; and revised paragraph (d)(3) to clarify that an operator must not leave a site in a condition that poses hazards to wildlife.
§ 29.119(b)(5)	Revised to clarify that an operator must not leave a site in a condition that poses hazards to wildlife.
§ 29.120(d)	Revised to clarify that any use of Federal water on the NWRS absent a demonstrated right must be approved by the Service as the technologically feasible, least damaging method.
§ 29.120(e)	Moved to § 29.103(b)(3) to clarify that providing a statement under penalty of perjury that an operator is in compliance with applicable State and Federal laws is part of the permit approval process.
§ 29.120(g)	Revised to clarify that mitigation must be mutually agreed upon and that it may be required to offset impacts to refuge resources or lost uses. Redesignated as § 29.120(f).
§ 29.121(e)	Revised to clarify that an operator would need to provide the Service with information only to the extent necessary to demonstrate compliance with a Service-issued permit.
§ 29.140	Removed language regarding operations in Alaska.
§ 29.141	Removed (c) as the Service does not currently have the authority to accept in-kind services to offset fees.

§ 29.151	Revised to clarify that operator is responsible for reclaiming any disturbances inside or outside of their area of operation and that an operator is liable for the full cost of reclamation.
§ 29.160	Revised to clarify that an operator will be given a chance to respond to the Service's notice of a proposed modification to their operations.
§ 29.171	Revised to include the requirement that, when a pre-existing operator transfers operations, the new operator must obtain an Operations Permit from the Service. Also revised to allow continuity of operations while they file the permit application.
§ 29.180	Revised to clarify that this section applies to any Service-issued permit (i.e., existing operators under a Service-issued permit) not just an Operations Permit granted under this rule for new operations; and revised language from ''continuously inactive for a period of 1 year'' to ''has no measurable production quantities for 12 consecutive months'' to provide further clarity on when an operator must plug a well.
§ 29.190	Deleted provisions related to operations in Alaska.
§ 29.190(e)	Revised to separate violations of Federal and State law into two different prohibited acts, (e) and (f), and to make wording consistent with other Service regulations.
§ 29.192	Revised to clarify that a violation will not affect your ability to get a permit for plugging and reclamation.
§ 29.200	Revised to clarify that an operator must administratively appeal under § 25.45 before going to Federal court. Also, revised to clarify that this process would be used to appeal all written decisions made under this subpart, not just those made under a permit. Finally, removed language regarding operations in Alaska.
§ 29.210(g)	Revised to clarify that for information provided under both § 29.210(d) and § 29.210(e), after reviewing an operator's affidavit or a third party's affidavit claiming exemption from public disclosure, the Service may find that information is not exempt from public disclosure and make that information available 10 business days after providing notice.

Compliance With Other Laws, Executive Orders, and Department Policies

Regulatory Planning and Review (Executive Orders 12866 and 13563)

Executive Order 12866 provides that the Office of Information and Regulatory Affairs (OIRA) in the Office of Management and Budget will review all significant rules. OIRA has determined that this rule is significant, because it may raise novel legal or policy issues arising out of legal mandates, the President's priorities, or the principles set forth in the executive order.

Executive Order 13563 reaffirms the principles of Executive Order 12866 while calling for improvements in the nation's regulatory system to promote predictability, to reduce uncertainty, and to use the best, most innovative, and least burdensome tools for achieving regulatory ends. The executive order directs agencies to consider regulatory approaches that reduce burdens and maintain flexibility and freedom of choice for the public where these approaches are relevant, feasible, and consistent with regulatory objectives. Executive Order 13563 emphasizes further that regulations must be based on the best available science and that the rulemaking process must allow for public participation and an open exchange of ideas. This rule is consistent with these requirements.

Regulatory Flexibility Act

Under the Regulatory Flexibility Act (RFA), as amended by the Small Business Regulatory Enforcement Fairness Act of 1996 (SBREFA), 5 U.S.C. 601 *et seq.,* whenever an agency is required to publish a notice of rulemaking for any proposed or final rule, it must prepare and make available for public comment a regulatory flexibility analysis that describes the effects of the rule on small entities (*i.e.,* small businesses, small organizations, and small government jurisdictions). However, no regulatory flexibility analysis is required if the head of the agency certifies the rule will not have a significant economic impact on a substantial number of small entities. The SBREFA amended the RFA to require Federal agencies to provide a statement of the factual basis for certifying that the rule will not have a significant economic impact on a substantial number of small entities.

We certify that this rule would not have a significant economic effect on a substantial number of small entities under the RFA (5 U.S.C. 601 *et seq.*). This certification is based on the cost-benefit and regulatory flexibility analysis found in the report entitled Non-Federal Oil and Gas Rulemaking Economic Analysis, which can be viewed at *http://www.fws.gov/refuges/oil-and-gas/rulemaking.html,* by clicking on the link entitled Non-Federal Oil and Gas Rulemaking Economic Analysis or at *www.regulations.gov* in Docket No. FWS–HQ–NWRS–2012–0086.

Small Business Regulatory Enforcement Fairness Act (SBREFA)

This rule is not a major rule under 5 U.S.C. 804(2). This rule:

(a) Would not have an annual effect on the economy of $100 million or more;

(b) Would not cause a major increase in costs or prices for consumers, individual industries, Federal, State, or local government agencies, or geographic regions; and

(c) Would not have significant adverse effects on competition, employment, investment, productivity, innovation, or the ability of U.S.-based enterprises to compete with foreign-based enterprises.

These conclusions are based on the cost-benefit and regulatory flexibility analysis found in the report entitled Non-Federal Oil and Gas Rulemaking Economic Analysis, which can be viewed at *http://www.fws.gov/refuges/oil-and-gas/rulemaking.html,* by clicking on the link entitled Non-Federal Oil and Gas Rulemaking Economic Analysis or at *www.regulations.gov* in Docket No. FWS–HQ–NWRS–2012–0086.

Unfunded Mandates Reform Act (UMRA)

This rule would not impose an unfunded mandate on State, local, or tribal governments or the private sector of more than $100 million per year. The rule would not have a significant or unique effect on State, local, or tribal governments or the private sector. It addresses use of refuge lands, and would impose no requirements on other agencies or governments. A statement containing the information required by the UMRA (2 U.S.C. 1531 *et seq.*) is not required.

Takings (Executive Order 12630)

This rule is not intended to result in the taking of private property or otherwise have takings implications under Executive Order 12630. The provisions of this rule would afford access to operators exercising non-Federal mineral rights under reasonable regulation. No other private property is affected. A takings implication assessment is not required.

Federalism (Executive Order 13132)

Under the criteria in section 1 of Executive Order 13132, the rule does not have sufficient Federalism

implications to warrant the preparation of a federalism summary impact statement. It addresses use of refuge lands, and would impose no requirements on other agencies or governments. A federalism summary impact statement is not required.

Civil Justice Reform (Executive Order 12988)

This rule complies with the requirements of Executive Order 12988. Specifically, this rule:

(a) Meets the criteria of section 3(a) requiring that all regulations be reviewed to eliminate errors and ambiguity and be written to minimize litigation; and

(b) Meets the criteria of section 3(b)(2) requiring that all regulations be written in clear language and contain clear legal standards.

Consultation With Indian Tribes (Executive Order 13175 and Department Policy)

The Department of the Interior strives to strengthen its government-to-government relationship with Indian tribes through a commitment to consultation with Indian tribes and recognition of their right to self-governance and tribal sovereignty. We have evaluated this rule under the Department's consultation policy and under the criteria in Executive Order 13175 and have determined that it has no substantial direct effects on federally recognized Indian tribes, but we offered consultation under the Department's tribal consultation policy with all interested tribes. On January 25, 2016, during the public comment period, we consulted with Doyon Limited, an Alaska Native Corporation, at their request.

Paperwork Reduction Act of 1995 (PRA)

This rule contains a collection of information that we have submitted to OMB for approval under the PRA (44 U.S.C. 3501 *et seq.*). We may not conduct or sponsor and you are not required to respond to a collection of information unless it displays a currently valid OMB control number.

As part of our continuing efforts to reduce paperwork and respondent burdens, we invited the public and other Federal agencies to comment on any aspect of the reporting burden associated with this information collection. While we received no comments that were specific to the information collection portion of the rule, we did receive several comments that relate to the information collection portion of the rule. These comments and our responses can be found in *Information Requirements and Public Access to Information* in the Summary of and Response to Public Comments portion of the preamble. We made no changes to the information collection portion of the rule based on these comments. However, we have made two changes to the rule that impact information collection.

The first change expands the information an operator of pre-existing wells is required to submit to the refuge manager. In addition to requiring operators of pre-existing wells to submit right-to-operate documentation, company contact information, a plat of existing area of operations, and copies of plans and permits required by local, State, and Federal agencies, operators must also submit to the Service: A brief description of the current operations and any anticipated changes to the current operations; as well as documentation of the current operating methods, surface equipment, and materials produced or used. These new information collection requirements are, as follows: Pre-existing Operations (§ 29.61). Within 90 days after the effective date of these regulations, or after a boundary change or establishment of a new refuge, pre-existing operators without a Service-issued permit must submit:

- Documentation of the right to operate within the refuge.
- Contact information (names, phone numbers, and addresses) of the primary company representative; the representative responsible for field supervision; and the representative responsible for emergency response.
- A brief description of the current operations, and any anticipated changes to the current operations.
- Scaled map clearly delineating the existing area of operations.
- Documentation of the current operating methods, surface equipment, materials produced or used, and monitoring methods.
- Copies of all plans and permits required by local, State, and Federal agencies.

The second change to the final rule that impacts information collection is that if an operator transfers their operations to another operator this results in the loss of pre-existing status for that operation, and the new operator will need to obtain an Operations Permit. As a result, this operator must provide all applicable information required by this rule for obtaining an Operations Permit. These new information collection requirements are as follows:

Change of Operator (§ 29.171)

Section 29.171(a). When operations conducted under § 29.44 are transferred, the transferee must apply for an operations permit and include the information requested in FWS Form 3–2469 within 90 days of the transfer. The new operator may continue operating, but must provide to the Service within 30 calendar days from the date of the transfer:

- Documentation demonstrating that the operator holds the right to operate within the refuge.
- Names, phone numbers, and addresses of the primary company representative, the representative responsible for field supervision, and the representative responsible for emergency response.

Section 29.171(b). If operations conducted under § 29.43 or an operations permit are transferred, the transferee must provide the following within 30 days of commencing operations:

- Right-to-operate and contact information required under § 29.171(a).
- Written agreement to conduct operations in accordance with all terms and conditions of the previous operator's permit.
- Financial assurance that is acceptable to the Service and made payable to the Service.

For further information on these changes, see the ''Response to Comments'' section.

Below is a summary of the information collection associated with non-Federal oil and gas operations on National Wildlife Refuge System lands. Operators do not need to resubmit information that is already on file with the Service, provided the information is still current and accurate. Documents and materials submitted to other Federal and State agencies may be submitted, if they meet the specific requirements of the Service.

OMB Control No: 1018–0162.

Title: Management of Non-Federal Oil and Gas Rights on National Wildlife Refuge System Lands, 50 CFR part 29, subpart D.

Service Form Number(s): 3–2469.

Description of Respondents: Businesses that conduct oil and gas exploration on national wildlife refuges.

Respondent's Obligation: Required to obtain or retain a benefit.

Frequency of Collection: On occasion.

Total Annual Nonhour Cost Burden: None.

Activity/requirement	Estimated number of annual responses	Completion time per response (hours)	Estimated total annual burden hours
Preexisting Operations (§ 29.61)	40	50	2,000
Temporary Access Permit Application (§ 29.71)	35	17	595
Accessing Oil and Gas Rights from Non-Federal Surface Location (§ 29.80)	5	1	5
Pre-application Meeting for Operations Permit (§ 29.91)	45	2	90
Operations Permit Application (§§ 29.94–29.97)	45	140	6,300
Financial Assurance (§§ 29.103(b), 29.150)	45	1	45
Identification of Wells and Related Facilities (§ 29.119(b))	45	2	90
Reporting (§ 29.121):			
Third-Party Monitor Report (§ 29.121(b))	300	17	5,100
Notification—Injuries/Mortality to Fish and Wildlife and Threatened/Endangered Plants (§ 29.121(c))	20	1	20
Notification—Accidents involving Serious Injuries/Death and Fires/Spills (§ 29.121(d))	20	1	20
Written Report—Accidents Involving Serious Injuries/Deaths and Fires/Spills (§ 29.121(d))	20	16	320
Report—Verify Compliance with Permits (§ 29.121(e))	240	4	960
Notification—Chemical Disclosure of Hydraulic Fracturing Fluids uploaded to FracFocus (§ 29.121(f))	5	1	5
Permit Modifications (§ 29.160(a))	10	16	160
Change of Operator:			
Transferring Operator Notification (§ 29.170)	20	8	160
Acquiring Operator's Requirements for Wells Not Under a Service Permit (§ 29.171(a))	19	40	760
Acquiring Operator's Acceptance of an Existing Permit (§ 29.171(b))	1	8	8
Extension to Well Plugging (§ 29.181(a)):			
Application for Permit	10	140	1,400
Modification	5	16	80
Public Information (§ 29.210):			
Affidavit in Support of Claim of Confidentiality (§ 29.210(c) and (d))	1	1	1
Confidential Information (§ 29.210(e) and (f))	1	1	1
Maintenance of Confidential Information (§ 29.210(h))	1	1	1
Generic Chemical Name Disclosure (§ 29.210(i))	1	1	1
Total	934		18,122

National Environmental Policy Act (NEPA)

This rule constitutes a major Federal action with the potential to significantly affect the quality of the human environment. We have prepared the final environmental impact statement (FEIS) under the requirements of the NEPA of 1969 (42 U.S.C. 4321 *et seq.*). The FEIS is available at *http://www.fws.gov/refuges/oil-and-gas/rulemaking.html,* by clicking on the link entitled ''Non-Federal Oil and Gas FEIS'' and at *www.regulations.gov* at Docket No. FWS–HQ–NWRS–2012–0086.

In addition, EPA published a notice announcing the final EIS, as required under section 309 of the Clean Air Act (42 U.S.C. 7401 *et seq.*), on August 19, 2016, at 81 FR 55456. The EPA is charged under section 309 of the Clean Air Act to review all Federal agencies' environmental impact statements (EISs) and to comment on the adequacy and the acceptability of the environmental impacts of proposed actions in the EISs. On February 9, 2016, the Service received a ''no objection'' finding from the EPA that concluded that the draft EIS did not identify any potential environmental impacts requiring substantive changes to the proposal. Elsewhere in today's **Federal Register** is a notice announcing the availability of the record of decision.

Effects on the Energy Supply (Executive Order 13211)

This rule is not a significant energy action under the definition in Executive Order 13211. A statement of Energy Effects is not required.

Drafting Information

This final rule reflects the collective efforts of Service staff in the NWRS, Division of Natural Resource and Conservation Planning, Branch of Wildlife Resources, refuges, and field offices, with assistance from the Department of the Interior, Office of the Solicitor.

List of Subjects

50 CFR Part 28

Law enforcement, Penalties, Wildlife refuges.

50 CFR Part 29

Oil and gas exploration, Public lands—mineral resources, Public lands—rights-of-way, Reporting and recordkeeping requirements, Wildlife refuges.

Final Regulation Promulgation

In consideration of the foregoing, the Service amends 50 CFR parts 28 and 29 as follows:

PART 28—ENFORCEMENT, PENALTY, AND PROCEDURAL REQUIREMENTS FOR VIOLATIONS OF SUBCHAPTER C

■ 1. The authority citation for part 28 is revised to read as follows:

Authority: 5 U.S.C. 301; 16 U.S.C. 460k, 664, 668dd, 685, 690d, 715i, 725; 43 U.S.C. 315a.

■ 2. Revise the heading of part 28 to read as set forth above.

■ 3. Revise § 28.11 to read as follows:

§ 28.11 Purpose of regulations.

The regulations in this part govern enforcement, penalty, and procedural requirements for violations of subchapter C of this chapter.

PART 29—LAND USE MANAGEMENT

■ 4. The authority citation for part 29 is revised to read as follows:

Authority: 5 U.S.C. 301; 16 U.S.C. 460k, 664, 668dd, 685, 690d, 715i, 725, 3161; 30 U.S.C. 185; 31 U.S.C. 3711, 9701; 40 U.S.C. 319; 43 U.S.C. 315a; 113 Stat. 1501A–140.

Subpart C—Mineral Operations

■ 5. Revise § 29.32 to read as follows:

§ 29.32 Non-Federal mineral rights.

(a) Non-Federal mineral rights owners within the National Wildlife Refuge System, not including coordination areas, must, to the greatest extent practicable, conduct all exploration, development, and production operations in such a manner as to prevent damage, erosion, pollution, or contamination to Service-administered lands, waters, facilities, and to wildlife thereon. So far as is practicable, such operations must also be conducted without interference to the operation of the refuge and disturbance to the wildlife thereon.

(1) Physical occupancy must be kept to the minimum space necessary to conduct efficient mineral operations.

(2) Persons conducting mineral operations on Service-administered lands and waters must comply with all applicable Federal and State laws and regulations for the protection of wildlife and the administration of the area.

(3) All waste and contaminating substances must be kept in the smallest practicable area, confined so as to prevent escape as a result of rains and high water or otherwise, and removed from Service-administered lands and waters as quickly as practicable in such a manner as to prevent contamination, pollution, damage, or injury to Service-administered lands, waters, or facilities, or to wildlife thereon.

(4) Structures and equipment must be removed when the need for them has ended, and, upon the cessation of operations, the habitat in the area of operations must be restored to the extent possible to pre-operation conditions.

(b) Nothing in this section will be applied so as to contravene or nullify rights vested in holders of mineral interests on refuge lands.

■ 6. Add subpart D to read as set forth below:

Subpart D—Management of Non-Federal Oil and Gas Rights

Purpose and Scope

Sec.
29.40 What are the purpose and scope of the regulations in this subpart?
29.41 When does this subpart apply to me?
29.42 What authorization do I need to conduct operations?
29.43 If I am already operating under Service authorization, what do I need to do?
29.44 If I am operating without prior Service authorization, what do I need to do?

Definitions

29.50 What do the terms used in this subpart mean?

Pre-Existing Operations

29.60 Do I need an operations permit for my pre-existing operation?
29.61 What information must I provide to the Service?
29.62 What if I intend to conduct new operations or modify my pre-existing operations?
29.63 What plugging and reclamation requirements apply to my pre-existing operations?
29.64 What other provisions apply to my operations?

Temporary Access Permits

29.70 When do I need a temporary access permit?
29.71 How do I apply for a temporary access permit?
29.72 When will the Service grant a temporary access permit?
29.73 How much time will I have to conduct my reconnaissance surveys?

Accessing Oil and Gas Rights From a Non-Federal Surface Location

29.80 Do I need a permit for accessing oil and gas rights from a non-Federal location?

Operations Permit: Application

29.90 Who must apply for an operations permit?
29.91 What should I do before filing an application?
29.92 May I use previously submitted information?
29.93 Do I need to submit information for all possible future operations?
29.94 What information must be included in all applications?
29.95 What additional information must be included if I am proposing geophysical exploration?
29.96 What additional information must be included if I am proposing drilling operations?
29.97 What additional information must be included if I am proposing production operations?

Operations Permit: Application Review and Approval

29.100 How will the Service process my application?
29.101 How will the Service conduct an initial review?
29.102 How will the Service conduct a formal review?
29.103 What standards must be met to approve my application?
29.104 What actions may the Service take on my operations permit application?

Operating Standards

29.110 What are the purposes of the Service's operating standards?
29.111 What general facility design and management standards must I meet?
29.112 What fish and wildlife protection standards must I meet?
29.113 What hydrologic standards must I meet?
29.114 What safety standards must I meet?
29.115 What lighting and visual standards must I meet?
29.116 What noise reduction standards must I meet?
29.117 What reclamation and protection standards must I meet?
29.118 What additional operating standards apply to geophysical operations?
29.119 What additional operating standards apply to drilling and production operations?

General Terms and Conditions

29.120 What terms and conditions apply to all operators?
29.121 What monitoring and reporting is required for all operators?
29.122 For how long is my operations permit valid?

Access Fees

29.140 May I cross Federal property to reach the boundary of my oil and gas right?
29.141 Will the Service charge me a fee for access?
29.142 Will I be charged a fee for emergency access to my operations?

Financial Assurance

29.150 When do I have to provide financial assurance to the Service?
29.151 How does the Service establish the amount of financial assurance?
29.152 Will the Service adjust the amount required for my financial assurance?
29.153 When will the Service release my financial assurance?
29.154 Under what circumstances will I forfeit my financial assurance?

Modification to an Operation

29.160 Can I modify operations under an approved permit?

Change of Operator

29.170 What are my responsibilities if I transfer my right to operate?
29.171 What must I do if operations are transferred to me?

Well Plugging

29.180 When must I plug my well?
29.181 Can I get an extension to the well plugging requirement?

Prohibited Acts and Penalties

29.190 What acts are prohibited under this subpart?
29.191 What enforcement actions can the Service take?
29.192 How do violations affect my ability to obtain a permit?

Appeals

29.200 Can I, as operator, appeal Service decisions?

Public Information

29.210 How can the public learn about oil and gas activities on refuge lands?

Information Collection

29.220 Has the Office of Management and Budget approved the collection of information?

Subpart D—Management of Non-Federal Oil and Gas Rights

Purpose and Scope

§ 29.40 What are the purpose and scope of the regulations in this subpart?

(a) The purpose of this subpart is to ensure that operators exercising non-Federal oil and gas rights within the National Wildlife Refuge System (NWRS) outside of Alaska use technologically feasible, least damaging methods to:

(1) Protect Service-administered lands and waters, and resources of refuges;

(2) Protect refuge wildlife-dependent recreational uses and experiences and visitor or employee health and safety; and

(3) Conserve refuges for the benefit of present and future generations of Americans.

(b) This subpart applies to all operators conducting non-Federal oil and gas operations outside of Alaska on Service-administered lands held in fee or less-than fee (excluding coordination areas) or Service-administered waters to the extent necessary to protect those property interests. These regulations do not apply to non-Federal surface locations within the boundaries of a refuge (*i.e.,* inholdings), except to the extent that activities associated with those operations, including access to an inholding, occur on Service-administered lands or waters.

(c) This subpart is not intended to result in a taking of any property interest. The purpose of this subpart is to reasonably regulate operations to protect Service-administered lands and waters, resources of refuges, visitor uses and experiences, and visitor or employee health and safety.

§ 29.41 When does this subpart apply to me?

This subpart applies to you if you are an operator who conducts or proposes to conduct non-Federal oil or gas operations on Service-administered lands or waters outside of Alaska.

§ 29.42 What authorization do I need to conduct operations?

(a) You must demonstrate to the Service that you have the right to operate in order to conduct operations on Service-administered lands or waters.

(b) Except as provided in §§ 29.43 or 29.44, before starting operations, you must obtain a temporary access permit under §§ 29.70 through 29.73 for reconnaissance surveys and/or an operations permit under §§ 29.90 through 29.97.

§ 29.43 If I am already operating under Service authorization, what do I need to do?

If you already have a Service-issued permit, you may continue to operate according to the terms and conditions of that approval, subject to the provisions of this subpart. If you propose to conduct new operations, modify your existing operations, conduct well plugging or reclamation operations, or obtain an extension of the well plugging requirement to maintain your well in shut-in status, you must either amend your current authorization or obtain an operations permit in accordance with §§ 29.90 through 29.97, Operations Permit: Application, and such new operations or modifications will be subject to the applicable provisions of this subpart. Additionally, your existing operations are subject to the following regulations:

(a) § 29.120(b) and (d)–(g) and § 29.121(a) and (c)–(f);

(b) § 29.170(a);

(c) §§ 29.180 and 29.181;

(d) § 29.190; and

(e) § 29.200.

§ 29.44 If I am operating without prior Service authorization, what do I need to do?

Any operator that has commenced operations prior to December 14, 2016 in accordance with applicable local, State, and Federal laws and regulations may continue without an operations permit. However, your operation is subject to the requirements of §§ 29.60 through 29.64, Pre-Existing Operations, and the requirements that when you propose to conduct new operations, modify your pre-existing operations, conduct well plugging and reclamation operations, or obtain an extension of the well plugging requirement to maintain your well in shut-in status, you must obtain an operations permit in accordance with §§ 29.90 through 29.97, Operations Permit: Application, and all applicable requirements of this subpart.

Definitions

§ 29.50 What do the terms used in this subpart mean?

In addition to the definitions in §§ 25.12, 29.21, and 36.2 of this subchapter, the following definitions apply to this subpart:

Access means any method of entering or traversing on or across Service-administered lands or waters, including but not limited to: Vehicle, watercraft, fixed-wing aircraft, helicopter, unmanned aerial vehicle, off-road vehicle, mobile heavy equipment, snowmobile, pack animal, and foot. Access does not include the use of aircraft, including, but not limited to, airplanes, helicopters, and unmanned aircraft vehicles, that do not land on, or are not launched from, Service-administered lands or waters.

Area of operations means the area of Service-administered lands or waters on which operations are carried out, including roads or other areas that you are authorized to use related to the exercise of your oil and gas rights.

Contaminating substance means any toxic or hazardous substance that is used in or results from the conduct of operations and is listed under the Clean Air Act (42 U.S.C. 7401 *et seq.*), Clean Water Act regulations at 40 CFR parts 112 and 116, the Resource Conservation and Recovery Act regulations at 40 CFR part 261, or the Hazardous Materials Transportation Act regulations at 49 CFR part 172. This includes, but is not limited to, explosives, radioactive materials, brine waters, formation waters, petroleum products, petroleum byproducts, and chemical compounds used for drilling, production, processing, well testing, well completion, and well servicing.

Gas means any fluid, either combustible or noncombustible, that is produced in a natural state from the earth and that maintains a gaseous or rarefied state at ordinary temperature and pressure conditions.

Oil means any viscous combustible liquid hydrocarbon or solid hydrocarbon substance that occurs naturally in the earth and is easily liquefiable on warming.

Modifying means changing operations in a manner that will result in additional impacts on refuge resources, visitor uses, refuge administration, or human health and safety beyond the scope, intensity, and/or duration of existing impacts. In order to determine if activities would have additional impacts, you must consult with the Service.

Operations means all existing and proposed functions, work, and activities in connection with the exercise of oil or gas rights not owned by the United States and located on Service-administered lands or waters.

(1) Operations include, but are not limited to: Access by any means to or from an area of operations; construction; geological and geophysical exploration; drilling, well servicing, workover, or recompletion; production; hydraulic fracturing, well simulation, and injection wells; gathering (including installation and maintenance of flowlines and gathering lines); storage, transport, or processing of petroleum products; earth moving; excavation; hauling; disposal; surveillance, inspection, monitoring, or maintenance of wells, facilities, and equipment;

reclamation; road and pad building or improvement; shot hole and well plugging and abandonment, and reclamation; and all other activities incident to any of the foregoing.

(2) Operations do not include reconnaissance surveys as defined in this subpart or oil and gas pipelines that are located within a refuge under authority of a deeded or other right-of-way.

Operations permit means a permit issued by the Service under this subpart authorizing an operator to conduct operations on Service-administered lands or waters.

Operator means any person or entity, agent, assignee, designee, lessee, or representative thereof exercising or proposing to exercise non-Federal oil and gas rights on Service-administered lands or waters.

Reconnaissance survey means an inspection or survey conducted by qualified specialists for the purpose of preparing a permit application. A reconnaissance survey:

(1) Includes identification of the area of operations and collection of natural and cultural resource information within and adjacent to the proposed area of operations.

(2) Does not include surface disturbance activities except for minimal disturbance necessary to perform cultural resource surveys, natural resource surveys, and location surveys required under this subpart.

Right to operate means a deed, lease, memorandum of lease, designation of operator, assignment of right, or other documentation demonstrating that you hold a legal right to conduct the operations you are proposing on Service-administered lands or waters.

Service, we, us and *our* means the U.S. Fish and Wildlife Service.

Technologically feasible, least damaging methods are those that we determine, on a case-by-case basis, to be most protective of refuge resources and uses while ensuring human health and safety, taking into consideration all relevant factors, including environmental, economic, and technological factors and the requirements of applicable law.

Temporary access permit means a permit issued by the Service authorizing an operator to access that operator's proposed area of operations to conduct reconnaissance surveys to collect basic information necessary to prepare an operations permit application.

Third-party monitor means a qualified specialist, who is not an employee, agent, or representative of the operator, nor has any conflicts of interest that could preclude objectivity in monitoring an operator's compliance, and who has the relevant expertise to monitor operations for compliance with applicable laws, regulations, and permit requirements.

Usable water means an aquifer or its portion that:

(1)(i) Supplies any public water system; or

(ii) Contains a sufficient quantity of ground water to supply a public water system and either:

(A) Currently supplies drinking water for human consumption; or

(B) Contains fewer than 10,000 mg/l total dissolved solids; and

(2) Is not an exempted aquifer.

Waste means any material that is discarded. It includes, but is not limited to: Drilling fluids and cuttings; produced fluids not under regulation as a toxic or hazardous substance; human waste; garbage; fuel drums; pipes; oil; refined oil and other hydrocarbons; contaminated soil; synthetic materials; manmade structures or equipment; or native and nonnative materials.

You means the operator, unless otherwise specified or indicated by the context.

Pre-Existing Operations

§ 29.60 Do I need an operations permit for my pre-existing operation?

No. Pre-existing operations are those conducted as of December 14, 2016 without an approved permit from the Service or prior to a boundary change or establishment of a new refuge. Your pre-existing operations may be continued without an operations permit, but you are required to operate in accordance with applicable local, State, and Federal laws and regulations, and are subject to applicable provisions of this subpart, including requirements for a permit when you propose to conduct new operations or to modify pre-existing operations.

§ 29.61 What information must I provide to the Service?

You must submit the following information to the Service where your pre-existing operation is occurring by February 13, 2017 or 90 days after a boundary change or establishment of a new refuge:

(a) Documentation demonstrating that you hold the right to operate on Service-administered lands or waters.

(b) The names, phone numbers, and addresses of your:

(1) Primary company representative;

(2) Representative responsible for field supervision; and

(3) Representative responsible for emergency response.

(c) A brief description of your current operations, and any anticipated changes to current operations, including:

(1) A scaled map clearly delineating your existing area of operations;

(2) Documentation of the current operating methods, surface equipment, materials produced or used, and monitoring methods; and

(3) Copies of all plans and permits required by local, State, and Federal agencies, including a Spill Prevention Control and Countermeasure Plan if required by Environmental Protection Agency regulations at 40 CFR part 112.

§ 29.62 What if I intend to conduct new operations or modify my pre-existing operations?

(a) You must obtain an operations permit before conducting operations that are begun after December 14, 2016 for those new operations in accordance with §§ 29.90 through 29.97, Operations Permit: Application, and all applicable requirements of this subpart.

(b) You must obtain an operations permit prior to modifying your pre-existing operations for that modification in accordance with §§ 29.90 through 29.97, Operations Permit: Application, and all applicable requirements of this subpart.

§ 29.63 What plugging and reclamation requirements apply to my pre-existing operations?

Upon completion of your production operation, you are subject to the reclamation standards in § 29.117(d). You must obtain an operations permit in accordance with §§ 29.90 through 29.97, Operations Permit: Application, and all applicable requirements of this subpart, prior to plugging your well and conducting site reclamation.

§ 29.64 What other provisions apply to my operations?

Your pre-existing operations are also subject to the following regulations in this part 29:

(a) § 29.120(b), (d), (f), and (g) and § 29.121(a) and (c)–(f);

(b) § 29.170(a);

(c) §§ 29.180 and 29.181;

(d) § 29.190; and

(e) § 29.200.

Temporary Access Permits

§ 29.70 When do I need a temporary access permit?

You must apply to the Service and obtain a temporary access permit to access your proposed area of operations in order to conduct reconnaissance surveys within a refuge. This permit will describe the means, routes, timing, and other terms and conditions of your access determined by the Service to

result in only the minimum disturbance necessary to perform surveys.

§ 29.71 How do I apply for a temporary access permit?

You must submit the information requested in FWS Form 3–2469 (Oil and Gas Operations Special Use Permit Application) to the refuge in which you propose to conduct operations. Information includes, but is not limited to:

(a) The name, legal address, and telephone number of the operator, employee, agent, or contractor responsible for overall management of the proposed operations;

(b) Documentation demonstrating that you hold the right to operate on Service-administered lands or waters;

(c) The name, legal address, telephone number, and qualifications of all specialists responsible for conducting the reconnaissance surveys (only required if the assistants/subcontractors/subpermittees will be operating on Service-administered lands or waters without the permittee being present);

(d) A brief description of the intended operation so that we can determine reconnaissance survey needs;

(e) A description of the survey methods you intend to use to identify the natural and cultural resources;

(f) A map (to-scale and determined by us to be acceptable) delineating the proposed reconnaissance survey area in relation to the refuge boundary and the proposed area of operations; and

(g) A description of proposed means of access and routes for conducting the reconnaissance surveys.

§ 29.72 When will the Service grant a temporary access permit?

Within 30 calendar days of receipt of the application for a reconnaissance survey, we will advise you whether the application fulfills the requirements of §§ 29.70 through 29.71 and issue you a temporary access permit or provide you with a statement of additional information that is needed for us to conduct review of your application.

§ 29.73 How much time will I have to conduct my reconnaissance surveys?

Your temporary access permit will be in effect for a maximum of 60 calendar days from the date of issuance, unless a longer term is approved in the permit. We may extend the term of the permit for a reasonable period of time, based upon your written request that explains why an extension is necessary.

Accessing Oil and Gas Rights From a Non-Federal Surface Location

§ 29.80 Do I need a permit for accessing oil and gas rights from a non-Federal location?

No. Using directional drilling from a non-Federal surface location to reach your oil and gas rights within a refuge is exempt from these regulations. However, you are encouraged to provide the Service the names, phone numbers, and addresses of your primary company representative, representative responsible for field supervision, and representative responsible for emergency response at least 60 calendar days prior to conducting your operation. If you require access across Service-administered lands or waters, that access is subject to applicable provisions of this subpart, including obtaining an operations permit for any new access or modification of existing access.

Operations Permit: Application

§ 29.90 Who must apply for an operations permit?

Except as otherwise provided in §§ 29.43, 29.44, 29.70, and 29.80, if you are proposing to conduct operations on Service-administered lands or waters outside of Alaska, you must submit an application (FWS Form 3–2469) for an operations permit to the Service.

§ 29.91 What should I do before filing an application?

You should participate in a pre-application meeting with the Service to allow for an early exchange of information between you and the Service with the intent of avoiding delays in your application process.

(a) For the meeting, you should provide:

(1) Documentation demonstrating that you hold the legal right to operate on Service-administered lands or waters; and

(2) An overview of your proposed operation and timing.

(b) The Service will provide guidance on the permitting process and information on available resource data, and identify additional data needs.

§ 29.92 May I use previously submitted information?

Yes.

(a) You do not need to resubmit information that is already on file with the Service, provided that such information is still current and accurate. You should reference this information in your oil and gas operations permit application.

(b) You may submit documents and materials submitted to other Federal and State agencies noting how the information meets the specific requirements of §§ 29.93 through 29.97.

§ 29.93 Do I need to submit information for all possible future operations?

No. You need only provide information for those operations for which you are seeking immediate approval. Approval of activities beyond the scope of your application may be subject to a new application and approval process.

§ 29.94 What information must be included in all applications?

All applications must include the information requested on FWS Form 3–2469, including, but not limited to:

(a) The name, legal address, and telephone number of the operator, employee, agent, or contractor responsible for overall management of the proposed operations.

(b) Documentation demonstrating that you hold the legal right to operate within the refuge.

(c) A description of the natural features of your proposed area of operations, such as: Streams, lakes, ponds, wetlands, estimated depths to the top and bottom of zones of usable water and topographic relief.

(d) The location of existing roads, trails, railroad tracks, pipeline rights-of-way, pads, and other disturbed areas.

(e) The location of existing structures that your operations could affect, including buildings, pipelines, oil and gas wells including both producing and plugged and abandoned wells, injection wells, freshwater wells, underground and overhead electrical lines, and other utility lines.

(f) Descriptions of the natural and cultural resource conditions from your reconnaissance survey reports or other sources collected for your proposed area of operations, including any baseline testing of soils and surface and near-surface ground waters within your area of operations that reasonably may be impacted by your surface operations.

(g) Locations map(s) (to-scale and determined by us to be acceptable) that clearly identifies:

(1) Proposed area of operations, existing conditions, and proposed new surface uses, including the boundaries of each of your oil and gas tracts in relation to your proposed operations and the relevant refuge boundary.

(2) Proposed access routes of new surface disturbances as determined by a location survey.

(3) Proposed location of all support facilities, including those for transportation (*e.g.,* vehicle parking areas, helicopter pads, etc.), sanitation,

occupation, staging areas, fuel storage areas, refueling areas, loading docks, water supplies, and disposal facilities.

(h) The method and diagrams, including cross-sections, of any proposed pad construction, road construction, cut-and-fill areas, and surface maintenance, including erosion control.

(i) The number and types of equipment and vehicles, including an estimate of vehicular round trips associated with your operation.

(j) An estimated timetable for the proposed operations, including any operational timing constraints.

(k) The type and extent of security measures proposed at your area of operations.

(l) The power sources and their transmission systems for the proposed operations.

(m) The types and quantities of all solid and liquid waste generated and the proposed methods of storage, handling, and disposal.

(n) The source, quantity, access route, and transportation/conveyance method for all water to be used in operations, including hydraulic fracturing, and estimations of any anticipated wastewater volumes generated, including flowback fluids from hydraulic fracturing, and the proposed methods of storage, handling, and recycling or disposal.

(o) The following information regarding mitigation actions and alternatives considered:

(1) A description of the steps you propose to take to mitigate anticipated adverse environmental impacts on refuge resources and uses, including, but not limited to, the refuge's land features, land uses, fish and wildlife, vegetation, soils, surface and subsurface water resources, air quality, noise, lightscapes, viewsheds, cultural resources, and economic environment.

(2) A description of any anticipated impacts that you cannot mitigate.

(3) A description of alternatives considered that meet the criteria of technologically feasible, least damaging methods of operations, as well as the costs and environmental effects of such alternatives.

(p) You must submit the following information about your spill control and emergency preparedness plan. You may use a spill prevention control and countermeasure plan prepared under 40 CFR part 112 if the plan includes all of the information required by this section. You must submit:

(1) The names, addresses, and telephone numbers of the people whom the Service can contact in the event of a spill, fire, or accident, including the order in which the individuals should be contacted.

(2) The notification procedures and steps taken to minimize damage in the event of a spill, fire, or accident.

(3) Identification of contaminating substances used within your area of operations or expected to be encountered during operations.

(4) Trajectory analysis for potential spills that are not contained on location.

(5) Identification of abnormal pressure, temperature, toxic gases or substances, or other hazardous conditions at your area of operations or expected to be encountered during operations.

(6) Measures (*e.g.,* procedures, facility design, equipment) to minimize risks to human health and safety, and the environment.

(7) Steps to prevent accumulations of oil or other materials deemed to be fire hazards from occurring in the vicinity of well locations and lease tanks.

(8) The equipment and methods for containment and cleanup of contaminating substances, including a description of the equipment available at your area of operations and equipment available from local contractors.

(9) A stormwater drainage plan and actions intended to mitigate stormwater runoff.

(10) Material safety data sheets for each material you will use or encounter during operations, including expected quantities maintained at your area of operations.

(11) A description of the emergency actions you will take in the event of injury or death to fish and wildlife or vegetation.

(12) A description of the emergency actions you will take in the event of accidents causing human injury.

(13) Contingency plans for conditions and emergencies other than spills, such as if your area of operations is located in areas prone to hurricanes, flooding, tornadoes, fires, or earthquakes.

(q) A description of the specific equipment, materials, methods, and schedule that will be used to meet the operating standards for reclamation at § 29.117.

(r) An itemized list of the estimated costs that a third party would charge to complete reclamation.

§ 29.95 What additional information must be included if I am proposing geophysical exploration?

If you propose to conduct geophysical exploration, you must submit the information requested on FWS Form 3–2469, including, but not limited to:

(a) A map showing the positions of each survey line including all source and receiver locations as determined by a locational survey, and including shot point offset distances from wells, buildings, other infrastructure, cultural resources, and environmentally sensitive areas;

(b) The number of crews and numbers of workers in each crew;

(c) A description of the acquisition methods, including the procedures and specific equipment you will use, and energy sources (*e.g.,* explosives, vibroseis trucks);

(d) A description of the methods of access along each survey line for personnel, materials, and equipment; and

(e) A list of all explosives, blasting equipment, chemicals, and fuels you will use in the proposed operations, including a description of proposed disposal methods, transportation methods, safety measures, and storage facilities.

§ 29.96 What additional information must be included if I am proposing drilling operations?

If you are proposing to drill a well, you must submit the information requested on FWS Form 3–2469, including, but not limited to:

(a) A description of the well pad construction, including dimensions and cross sections of cut-and-fill areas and excavations for ditches, sumps, and spill control equipment or structures, including lined areas;

(b) A description of the drill rig and equipment layout, including rig components, fuel tanks, testing equipment, support facilities, storage areas, and all other well-site equipment and facilities;

(c) A description of the type and characteristics of the proposed drilling mud systems; and

(d) A description of the equipment, materials, and methods of surface operations associated with your drilling, well casing and cementing, well control, well evaluation and testing, well completion, hydraulic fracturing or other well stimulation, and well plugging programs.

§ 29.97 What additional information must be included if I am proposing production operations?

If you are proposing to produce a well, you must submit the information requested on FWS Form 3–2469, including, but not limited to:

(a) The dimensions and the to-scale layout of the well pad, clearly identifying well locations, noting partial reclamation areas; gathering, separation, metering, and storage equipment; electrical lines; fences; spill control

equipment or structures, including lined areas, artificial lift equipment, tank batteries, treating and separating vessels, secondary or enhanced recovery facilities, water disposal facilities, gas compression and/or injection facilities; metering points; sales point (if on lease); tanker pickup points; gas compressor, including size and type (if applicable); and any other well site equipment.

(b) A general description of anticipated stimulations, servicing, and workovers.

(c) A description of the procedures and equipment used to maintain well control.

(d) A description of the method and means used to transport produced oil and gas, including vehicular transport; flowline and gathering line construction and operation, pipe size, and operating pressure; cathodic protection methods; surface equipment use; surface equipment location; maintenance procedures; maintenance schedules; pressure detection methods; and shutdown procedures.

(e) A road and well pad maintenance plan, including equipment and materials to maintain the road surface and control erosion.

(f) A vegetation management plan on well sites, roads, pipeline corridors, and other disturbed surface areas, including control of noxious and invasive species.

(g) A stormwater management plan on the well site.

(h) A produced water storage and disposal plan.

(i) A description of the equipment, materials, and procedures proposed for well plugging.

Operations Permit: Application Review and Approval

§ 29.100 How will the Service process my application?

We will conduct initial review of your application to determine if all information is complete. Once your information is complete, we will begin formal review.

§ 29.101 How will the Service conduct an initial review?

(a) Within 30 calendar days of receipt of your application, the Service will notify you in writing that one of the following situations exists:

(1) Your application is complete, and the Service will begin formal review;

(2) Your application does not meet the information requirements, in which case we will identify the additional information required to be submitted before the Service will be able to conduct formal review of your application; or

(3) More time is necessary to complete the review, in which case the Service will provide the amount of additional time reasonably needed along with a justification.

(b) If you submit additional information as requested under paragraph (a)(2) of this section, and the Service determines that you have met all applicable information requirements, the Service will notify you within 30 calendar days from receipt of the additional information that either:

(1) Your application is complete, and the Service will begin formal review; or

(2) More time is necessary to complete the initial review, in which case the Service will provide the amount of additional time reasonably needed along with a justification.

§ 29.102 How will the Service conduct a formal review?

For those applications for which the Service determines that the applicant holds a valid property right, the Service will conduct a formal review of your application by:

(a) Evaluating the potential impacts of your proposal on Service-administered lands and waters, or resources of refuges; visitor uses or experiences; or visitor or employee health and safety in compliance with applicable Federal laws; and

(b) Identifying any additional operating conditions that would apply to your approved application.

§ 29.103 What standards must be met to approve my application?

(a) In order to approve your operations permit application, the Service must determine that your operations will:

(1) Use technologically feasible, least damaging methods; and

(2) Meet all applicable operating standards.

(b) Before operations begin, you must submit to the Service:

(1) Financial assurance in the amount specified by the Service and in accordance with the requirements of §§ 29.150 through 29.154, Financial Assurance;

(2) Proof of liability insurance with limits sufficient to cover injuries to persons or property caused by your operations; and

(3) A statement under penalty of perjury, signed by an official who is authorized to legally bind the company, stating that proposed operations are in compliance with any applicable Federal law or regulation or any applicable State law or regulation related to non-Federal oil and gas operations and that all information submitted to the Service is true and correct.

§ 29.104 What actions may the Service take on my operations permit application?

(a) We will make a decision on your application within 180 days from the date we deem your application complete unless:

(1) We and you agree that such decision will occur within a shorter or longer period of time; or

(2) We determine that an additional period of time is required to ensure that we have, in reviewing the permit application, complied with all applicable legal requirements.

(b) We will notify you in writing that your permit application is:

(1) Approved, with or without operating conditions; or

(2) Denied, and provide justification for the denial. Any such denial must be consistent with § 29.40(c).

Operating Standards

§ 29.110 What are the purposes of the Service's operating standards?

The purposes are to:

(a) Protect Service-administered lands and waters, and refuge resources; wildlife-dependent visitor uses and experiences; and visitor and employee health and safety; and

(b) Ensure use of technologically feasible, least damaging methods. The operating standards give us and the operator flexibility to consider using alternative methods, equipment, materials design, and conduct of operations.

§ 29.111 What general facility design and management standards must I meet?

As a permittee, you must:

(a) Design, construct, operate, and maintain access to your operational site to cause the minimum amount of surface disturbance needed to safely conduct operations and to avoid areas we have identified as containing sensitive resources.

(b) Install and maintain secondary containment materials and structures for all equipment and facilities using or storing contaminating substances. The containment system must be sufficiently impervious to prevent discharge and must have sufficient storage capacity to contain, at a minimum, the largest potential spill incident.

(c) Keep temporarily stored waste in the smallest area feasible, and confine the waste to prevent escape as a result of percolation, rain, high water, or other causes. You must regularly remove waste from the refuge and lawfully dispose of the waste in a direct and workable timeframe. You may not establish a solid waste disposal site on a refuge.

(d) Use engines that adhere to applicable Federal and State emission standards.

(e) Construct, maintain, and use roads in a manner to minimize fugitive dust emissions.

(f) Design, operate, and maintain your operations and equipment in a manner consistent with good air pollution control practices so as to minimize emissions and leaks of air pollutants and hydrocarbons, including intentional releases or flaring of gases.

(g) Control the invasion of noxious and invasive plant and animal species in your area of operations from the beginning through final reclamation.

(h) Avoid conducting ground-disturbing operations within 500 feet of any surface water, including an intermittent or ephemeral watercourse, or wetland, or any refuge structure or facility used by refuges for interpretation, public recreation, or administration. We may increase or decrease this distance consistent with the need to protect Service-administered structures or facilities, visitor uses or experiences, or visitor or employee health and safety; or to ensure that you have reasonable access to your non-Federal oil and gas. Measurements for purposes of this paragraph are by map distance.

§ 29.112 What fish and wildlife protection standards must I meet?

To protect fish and wildlife resources on the refuge, you must:

(a) Along with your employees and contractors, adhere to all refuge regulations for the protection of fish, wildlife, and plants;

(b) Ensure that you, your employees, and contractors have been informed and educated by the refuge staff on the appropriate protection practices for wildlife conservation;

(c) Conduct operations in a manner that does not create an unsafe environment for fish and wildlife by avoiding or minimizing exposure to physical and chemical hazards; and

(d) Conduct operations in a manner that avoids or minimizes impacts to sensitive wildlife, including timing and location of operations.

§ 29.113 What hydrologic standards must I meet?

You must:

(a) Construct facilities in a manner that maintains hydrologic movement and function.

(b) Not cause measurable degradation of surface water or groundwater beyond that of existing conditions.

(c) Conduct operations in a manner that maintains natural processes of erosion and sedimentation.

§ 29.114 What safety standards must I meet?

To ensure the safety of your operations, you must:

(a) Maintain your area of operations in a manner that avoids or minimizes the cause or spread of fire and does not intensify fire originating outside your operations area;

(b) Maintain structures, facilities, improvements, and equipment in a safe and professional manner in order not to create an unsafe environment for refuge resources, visitors, and employees, by avoiding or minimizing exposure to physical and chemical hazards; and

(c) Provide site-security measures to protect visitors from hazardous conditions resulting from your operations.

§ 29.115 What lighting and visual standards must I meet?

(a) You must design, shield, and focus lighting to minimize the effects of spill light on the night sky or adjacent areas; and

(b) You must reduce visual contrast in the landscape in selecting the area of operations, avoiding unnecessary disturbance, choosing appropriate colors and materials for roads and permanent structures, and other means.

§ 29.116 What noise reduction standards must I meet?

You must prevent or minimize all noise that:

(a) Adversely affects refuge resources or uses, taking into account frequency, magnitude, or duration; or

(b) Exceeds levels that have been identified through monitoring as being acceptable to or appropriate for uses at the sites being monitored.

§ 29.117 What reclamation and protection standards must I meet?

(a) You must promptly clean up and remove from the refuge any released contaminating substances in accordance with all applicable Federal, State, and local laws.

(b) You must perform partial reclamation of areas that are no longer necessary to conduct operations. You must begin final reclamation within 6 months after you complete your authorized operations unless we authorize a different reclamation period in writing.

(c) You must protect all survey markers (*e.g.,* monuments, witness corners, reference monuments, and bearing trees) against destruction, obliteration, or damage from operations. You are responsible for reestablishment, restoration, and referencing of any monuments, corners, and bearing trees that are destroyed, obliterated, or damaged by your operations.

(d) You must complete reclamation by:

(1) Plugging all wells;

(2) Removing all above-ground structures, equipment, roads, and all other manmade material and debris resulting from operations;

(3) Removing or neutralizing any contaminating substances;

(4) Reestablishing native vegetative communities, or providing for conditions where ecological processes typical of the ecological zone (*e.g.,* plant or wildlife succession) will reestablish themselves;

(5) Grading to conform the contours to pre-existing elevations as necessary to maximize ecological function;

(6) Restoring conditions to pre-disturbance hydrologic movement and functionality;

(7) Restoring natural systems using native soil material that is similar in character to the adjacent undisturbed soil profiles;

(8) Ensuring that reclamation does not interfere with visitor use or with administration of the refuge;

(9) Attaining conditions that are consistent with the management objectives of the refuge, designed to meet the purposes for which the refuge was established; and

(10) Coordinating with us or with other operators who may be using a portion of your area of operations to ensure proper and equitable apportionment of reclamation responsibilities.

§ 29.118 What additional operating standards apply to geophysical operations?

If you conduct geophysical operations, you must do all of the following:

(a) Use surveying methods that minimize the need for vegetative trimming and removal.

(b) Locate source points using industry-accepted minimum safe-offset distances from pipelines, telephone lines, railroad tracks, roads, power lines, water wells, oil and gas wells, oil- and gas-production facilities, and buildings.

(c) Use equipment and methods that, based upon the specific environment, will minimize impacts to Service-administered lands and waters, and resources of refuges; visitor uses and experiences; and visitor and employee health and safety.

(d) If you use shot holes, you must:

(1) Use biodegradable charges;

(2) Plug all shot holes to prevent a pathway for migration for fluids along any portion of the bore; and

(3) Leave the site in a clean and safe condition that will not impede surface

reclamation or pose a hazard to wildlife or human health and safety.

§ 29.119 What additional operating standards apply to drilling and production operations?

If you conduct drilling and production operations, you must meet all of the following standards:

(a) To conduct drilling operations, you must:

(1) Use containerized mud circulation systems for operations;

(2) Not create or use earthen pits;

(3) Take all necessary precautions to keep your wells under control at all times, using only employees, contractors, or subcontractors trained and competent in well control procedures and equipment operation, and using industry-accepted well control equipment and practices; and

(4) Design, implement, and maintain integrated casing, cementing, drilling fluid, completion, stimulation, and blowout prevention programs to prevent escape of fluids to the surface and to isolate and protect usable water zones throughout the life of the well, taking into account all relevant geologic and engineering factors.

(b) To conduct production operations, in addition to meeting the standards of paragraphs (a)(1) through (a)(4) of this section, you must do all of the following:

(1) Monitor producing conditions for early indications that could lead to loss of mechanical integrity of producing equipment.

(2) Maintain all surface equipment and the wellhead to prevent leaks or releases of any fluids or air pollutants.

(3) Identify wells and related facilities with appropriate signage. Signs must remain in place until the well is plugged and abandoned and the related facilities are removed. Signs must be of durable construction, and the lettering must be legible and large enough to be read under normal conditions at a distance of at least 50 feet. Each sign must show the name of the well, name of the operator, and the emergency contact phone number.

(4) Remove all equipment and materials when not needed for the current phase of your operation.

(5) Plug all wells, leaving the surface in a clean and safe condition that will not impede surface reclamation or pose a hazard to wildlife or human health and safety, in accordance with § 29.117.

General Terms and Conditions

§ 29.120 What terms and conditions apply to all operators?

The following terms and conditions apply to all operators, regardless of whether these terms and conditions are expressly included in the permit:

(a) You must comply with all applicable operating standards in §§ 29.111 through 29.119; these operating standards will be incorporated in the terms and conditions of your operations permit. Violation of these operating standards, unless otherwise provided in your operations permit, will subject you to the Prohibited Acts and Penalties provisions of §§ 29.190 through 29.192.

(b) You are responsible for ensuring that all of your employees, agents, contractors, and subcontractors comply fully with the requirements of this subpart.

(c) You may be required to reimburse the Service for the costs of processing and administering temporary access permits and operations permits.

(d) You may not use any surface water or groundwater from a source located on a refuge unless you have demonstrated a right to use that water or the use has been approved by the Service as the technologically feasible, least damaging method.

(e) You agree to indemnify and hold harmless the United States and its officers and employees from and against any and all liability of any kind whatsoever arising out of or resulting from the acts or omissions of you and your employees, agents, representatives, contractors, and subcontractors in the conduct of activities under a Service-issued permit.

(f) You will be required to take all reasonable precautions to avoid, minimize, rectify, or reduce the overall impacts of your proposed oil and gas activities to the refuge. You may be required to mitigate for impacts to refuge resources and lost uses. Mutually agreed to mitigation tools for this purpose may include providing alternative habitat creation or restoration, land purchase, or other resource compensation.

(g) You are responsible for unanticipated and unauthorized damages as a direct or indirect result of your operations. You will be responsible for the actions and consequences of your employees and subcontractors. You will also be responsible for any reclamation of damages to refuge resources directly or indirectly caused by your operations through the occurrence of severe weather, fire, earthquakes, or the like thereof.

§ 29.121 What monitoring and reporting is required for all operators?

(a) The Service may access your area of operations at any time to monitor the effects of your operations to ensure compliance with the regulations in this subpart.

(b) The Service may determine that third-party monitors are necessary to ensure compliance with your operations permit and to protect Service-administered lands and waters, or the resources of refuges, visitor uses and experiences, and visitor or employee health and safety.

(1) The Service's determination will be based on the scope and complexity of the proposed operation, reports that you are required to submit under paragraph (e) of this section, and whether the refuge has the staff and technical ability to ensure compliance with the operations permit and any provision of this subpart.

(2) A third-party monitor will report directly to the Service at intervals determined by the Service. We will make the information reported available to you upon your request.

(3) You will be responsible for the cost of the third-party monitor.

(c) You must notify the Service within 24 hours of any injuries to or mortality of fish, wildlife, or endangered or threatened plants resulting from your operations.

(d) You must notify the Service of any accidents involving serious personal injury or death and of any fires or spills on the site immediately after the accident occurs. You must submit a full written report on the accident to the Service within 90 days after the accident occurs.

(e) Upon our request, you must submit reports or other information necessary to verify compliance with your permit or with any provision of this subpart. To fulfill this request, you may submit to us reports that you have submitted to the State under State regulations, or that you have submitted to any other Federal agency to the extent they are sufficient to verify compliance with permits or this subpart.

(f) If your operations include hydraulic fracturing, you must provide the Service with a report including the true vertical depth of the well, total water volume used, and a description of the base fluid and each additive in the hydraulic fracturing fluid, including the trade name, supplier, purpose, ingredients, Chemical Abstract Service Number (CAS), maximum ingredient concentration in additive (percent by mass), and maximum ingredient concentration in hydraulic fracturing fluid (percent by mass). The report must be either submitted through FracFocus or another Service-designated database.

§ 29.122 For how long is my operations permit valid?

Operations permits remain valid for the duration of the operation. Provisions of § 29.160 apply.

Access Fees

§ 29.140 May I cross Federal property to reach the boundary of my oil and gas right?

The Service may grant you the privilege of access on, across, or through Service-administered lands or waters to reach the boundary of your oil and gas right. You should contact the Service to determine if additional permits are necessary for access.

§ 29.141 Will the Service charge me a fee for access?

(a) The Service will charge you a fee if you require use of Service-administered lands or waters outside the boundary or scope of your oil and gas right:

(1) If you require new use of Service-administered lands or waters, we will charge you a fee based on the fair market value of that use.

(2) Fees under this section will not be charged for access within the scope of your oil and gas right or access to your right that is otherwise provided for by law.

(b) If access to your oil and gas right is across an existing refuge road, we may charge a fee according to a posted fee schedule.

§ 29.142 Will I be charged a fee for emergency access to my operations?

No.

(a) The Service will not charge a fee for access across Service-administered lands or waters beyond the scope of your oil and gas right as necessary to respond to an emergency situation at your area of operations if we determine after the fact that the circumstances required an immediate response to either:

(1) Prevent or minimize injury to refuge resources; or

(2) Ensure public health and safety.

(b) You will remain liable for any damage caused to refuge resources as a result of such emergency access.

Financial Assurance

§ 29.150 When do I have to provide financial assurance to the Service?

You will need to provide financial assurance as a condition of approval for your operations permit when you submit your application. You must file financial assurance with us in a form acceptable to the Service and payable upon demand. This financial assurance is in addition to any financial assurance required by any other Federal or State regulatory authority.

§ 29.151 How does the Service establish the amount of financial assurance?

(a) You are responsible for completing reclamation of your disturbances, whether within or outside your permit area, in accordance with this subpart and the terms of your permit. If you fail to properly complete reclamation, you will be liable for the full costs of completing the reclamation. We will base the financial assurance amount upon the estimated cost that a third-party contractor would charge to complete reclamation in accordance with this subpart. If the cost of reclamation exceeds the amount of your financial assurance, you will remain liable for all costs of reclamation in excess of the financial assurance.

(b) The Service will reduce the required amount of your financial assurance during the pendency of operations by the amount we determine is represented by in-kind reclamation you complete during your operations.

§ 29.152 Will the Service adjust the amount required for my financial assurance?

The Service may require, or you may request, an adjustment to the financial assurance amount because of any circumstances that increase or decrease the estimated costs established under § 29.151.

§ 29.153 When will the Service release my financial assurance?

(a) Your responsibility under the financial assurance will continue until either:

(1) The Service determines that you have met all applicable reclamation operating standards and any additional reclamation requirements that may be included in your operations permit; or

(2) A new operator assumes your operations, as provided in § 29.170(b).

(b) You will be notified by the Service within 30 calendar days of our determination that your financial assurance has been released.

§ 29.154 Under what circumstances will I forfeit my financial assurance?

(a) You may forfeit all or part of your financial assurance if we cannot secure your compliance with the provisions of your operations permit or a provision of this subpart. The part of your financial assurance forfeited is based on costs to the Service to remedy your noncompliance.

(b) In addition to forfeited financial assurance, we may temporarily:

(1) Prohibit you from removing all structures, equipment, or other materials from your area of operations;

(2) Require you to secure the operations site and take any necessary actions to protect Service-administered lands and waters, and resources of the refuge; visitor uses; and visitor or employee health and safety; and

(3) Suspend review of any permit applications you have submitted until we determine that all violations of permit provisions or of any provision of this subpart are resolved.

(4) Seek recovery as provided in § 29.151 for all costs of reclamation in excess of the posted financial assurance.

Modification to an Operation

§ 29.160 Can I modify operations under an approved permit?

The Service may amend an approved temporary access permit or an operations permit to adjust to changed conditions or to address unanticipated conditions, either upon our own action or at your request.

(a) To request a modification to your operation, you must provide, in writing, to the Service, your assigned permit number, a description of the proposed modification, and an explanation of why the modification is needed. We will review your request for modification under the approval standards at §§ 29.72 or 29.103. You may not implement any modification until you have received the Service's written approval.

(b) If the Service needs to amend your temporary access permit or operations permit, you will receive a written notice that:

(1) Describes the modification required and justification;

(2) Specifies the time within which you must notify the Service that you either accept the modifications to your permit or explain any concerns you may have; and

(3) Absent any concerns, specifies the time within which you must incorporate the modification into your operations.

Change of Operator

§ 29.170 What are my responsibilities if I transfer my right to operate?

(a) If your operations are being conducted under § 29.44, you must notify the Service in writing within 30 calendar days from the date the new operator acquires the rights to conduct operations. Your written notification must include:

(1) The names and addresses of the person or entity conveying the right and of the person or entity acquiring the right;

(2) The effective date of transfer;

(3) The description of the rights, assets, and liabilities being transferred and which ones, if any, are being reserved by the previous operator; and

(4) A written acknowledgement from the new operator that the contents of the notification are true and correct.

(b) If your operations are being conducted under § 29.43 or an operations permit:

(1) You must provide notice under paragraph (a) of this section.

(2) You remain responsible for compliance with your operations permit, and we will retain your financial assurance until the new operator:

(i) Adopts and agrees in writing to conduct operations in accordance with all terms and conditions of your operations permit;

(ii) Provides financial assurance with us that is acceptable to the Service and made payable to the Service; and

(iii) Receives written notification from the Service that transfer of the operations permit has been approved.

§ 29.171 What must I do if operations are transferred to me?

(a) If another operator transfers operations conducted under § 29.44, as the transferee you may continue operating under the requirements of that section, but:

(1) Within 30 calendar days from the date of the transfer, you must provide to the Service:

(i) Documentation demonstrating that you hold the right to operate; and

(ii) The names, phone numbers, and addresses of your:

(A) Primary company representative;

(B) Representative responsible for field supervision; and

(C) Representative responsible for emergency response.

(2) Within 90 days, or as otherwise agreed to by the Service, submit an operations permit application in compliance with §§ 29.90–29.97, Operations Permit: Application, that must be approved in compliance with applicable provisions of this subpart and under the timelines outlined in §§ 29.100–29.103, Operations Permit: Application Review and Approval.

(b) If another operator transfers operations conducted under § 29.43 or an operations permit, you must within 30 days of commencing transferred operations:

(1) Provide documentation demonstrating that you hold the right to operate.

(2) Provide the names, phone numbers, and addresses of your:

(i) Primary company representative;

(ii) Representative responsible for field supervision; and

(iii) Representative responsible for emergency response.

(3) Agree in writing to conduct operations in accordance with all terms and conditions of the previous operator's permit.

(4) File financial assurance with us that is acceptable to the Service and made payable to the Service.

(5) Receive written approval from the Service for the transfer of the operation's permit.

(c) You may modify operations transferred to you in accordance with § 29.160.

Well Plugging

§ 29.180 When must I plug my well?

Except as provided in § 29.181, you must plug your well, in accordance with the standards and procedures outlined in this subpart, when any of the following occurs:

(a) Your drilling operations have ended and you have taken no further action on your well within 60 calendar days;

(b) Your well, which has been completed for production operations, has no measurable production quantities for 12 consecutive months; or

(c) The period approved in your permit to maintain your well in shut-in status has expired.

§ 29.181 Can I get an extension to the well plugging requirement?

(a) You may apply for either an operations permit or a modification to your approved operations permit to maintain your well in a shut-in status for up to 5 years. Provide the information requested on FWS Form 3–2469, including, but not limited to:

(1) An explanation of why the well is shut-in or temporarily abandoned and your future plans for utilization;

(2) A demonstration of the mechanical integrity of the well; and

(3) A description of the manner in which your well, equipment, and area of operations will be maintained in accordance with the standards in the subpart.

(b) Based on the information provided under this section, we may approve your application to maintain your well in shut-in status for a period up to 5 years. We may condition an extension on an adjustment of your financial assurance.

(c) You may apply for additional extensions by submitting a new application under paragraph (a) of this section.

Prohibited Acts and Penalties

§ 29.190 What acts are prohibited under this subpart?

The following acts are prohibited:

(a) Operating in violation of the terms or conditions of a temporary access permit, an operations permit, a permit under § 29.43, or any applicable provision of this subpart, including §§ 29.60–29.64 for pre-existing operations.

(b) Damaging Service-administered lands or waters, or resources of a refuge, as a result of failure to comply with the terms or conditions of a temporary access permit, an operations permit, operations being conducted under §§ 29.43 or 29.44, or any provision of this subpart.

(c) Conducting operations without a temporary access permit or an operations permit, unless conducting operations under §§ 29.43 or 29.44.

(d) Failure to comply with any suspension or revocation order issued under this subpart.

(e) Failure to comply with the applicable provisions of Federal law or regulation including this subchapter.

(f) Failure to comply with the applicable provisions of the laws and regulations of the State wherein any operation is located unless further restricted by Federal law or regulation including this subchapter.

§ 29.191 What enforcement actions can the Service take?

If you engage in a prohibited act:

(a) The Service may suspend and/or revoke your approved operations permit and your authorization for operations as set forth at § 29.43 and § 29.44; and/or

(b) All prohibited acts are subject to the penalty provisions set forth at § 28.31 of this subchapter.

§ 29.192 How do violations affect my ability to obtain a permit?

Until you comply with the regulations in this subpart, we will not consider a request to conduct any new operations, except plugging and reclamation operations, on Service-administered lands or waters.

Appeals

§ 29.200 Can I, as operator, appeal Service decisions?

Yes. If you disagree with a decision made by the Service under this subpart, you may use the appeals process in § 25.45 of this subchapter. The process set forth in § 25.45 will be used for appeal of any written decision concerning approval, denial, or modification of an operation made by the Service under this subpart. No

Service decision under this subpart that is subject to appeal to the Regional Director or the Director shall be considered final agency action subject to judicial review under 5 U.S.C. 704 until the Regional Director has rendered his or her decision on the matter. The decision of the Regional Director will constitute the Service's final agency action, and no further appeal will lie in the Department from that decision.

Public Information

§ 29.210 How can the public learn about oil and gas activities on refuge lands?

(a) Interested parties may view publicly available documents at the refuge's office during normal business hours or by other means prescribed by the refuge. The availability for public inspection of information about the nature, location, character, or ownership of refuge resources will conform to all applicable laws and implementing regulations, standards, and guidelines.

(b) The refuge will make available for public inspection any documents that an operator submits to the Service under this subpart except those that the operator has identified as proprietary or confidential.

(c) For the information required in § 29.121(f), the operator and the owner of the information will be deemed to have waived any right to protect from public disclosure information submitted through FracFocus or another Service-designated database.

(d) For information required under this subpart that the owner of the information claims to be exempt from public disclosure and is withheld from the Service, a corporate officer, managing partner, or sole proprietor of the operator must sign and the operator must submit to the authorized officer an affidavit that:

(1) Identifies the owner of the withheld information and provides the name, address, and contact information for a corporate officer, managing partner, or sole proprietor of the owner of the information;

(2) Identifies the Federal statute or regulation that would prohibit the Service from publicly disclosing the information if it were in the Service's possession;

(3) Affirms that the operator has been provided the withheld information from the owner of the information and is maintaining records of the withheld information, or that the operator has access and will maintain access to the withheld information held by the owner of the information;

(4) Affirms that the information is not publicly available;

(5) Affirms that the information is not required to be publicly disclosed under any applicable local, State, tribal, or Federal law;

(6) Affirms that the owner of the information is in actual competition and identifies competitors or others that could use the withheld information to cause the owner of the information substantial competitive harm;

(7) Affirms that the release of the information would likely cause substantial competitive harm to the owner of the information and provides the factual basis for that affirmation; and

(8) Affirms that the information is not readily apparent through reverse engineering with publicly available information.

(e) If the operator relies upon information from third parties, such as the owner of the withheld information, to make the affirmations in paragraphs (d)(6) through (d)(8) of this section, the operator must provide a written affidavit from the third party that sets forth the relied-upon information.

(f) The Service may require any operator to submit to the Service any withheld information, and any information relevant to a claim that withheld information is exempt from public disclosure.

(g) If the Service determines that the information submitted under paragraphs (d) or (e) of this section is not exempt from disclosure, the Service will make the information available to the public after providing the operator and owner of the information with no fewer than 10 business days' notice of the Service's determination.

(h) The operator must maintain records of the withheld information until the later of the Service's release of the operator's financial assurance or 7 years after completion of operations on refuge lands. Any subsequent operator will be responsible for maintaining access to records required by this paragraph during its operation of the well. The operator will be deemed to be maintaining the records if it can promptly provide the complete and accurate information to the Service, even if the information is in the custody of its owner.

(i) If any of the chemical identity information required in this subpart is withheld, the operator must provide the generic chemical name in the submission required. The generic chemical name must be only as nonspecific as is necessary to protect the confidential chemical identity, and should be the same as or no less descriptive than the generic chemical name provided to the Environmental Protection Agency.

Information Collection

§ 29.220 Has the Office of Management and Budget approved the collection of information?

The Office of Management and Budget reviewed and approved the information collection requirements contained in this subpart and assigned OMB Control No. 1018–0162. We use the information collected under this subpart to manage non-Federal oil and gas operations on Service-administered lands or waters for the purpose of protecting wildlife and habitat, water quality and quantity, wildlife-dependent recreational opportunities, and the health and safety of employees and visitors on the NWRS. We may not conduct or sponsor and you are not required to respond to a collection of information unless it displays a currently valid OMB control number.

Karen Hyun,

Deputy Assistant Secretary for Fish and Wildlife and Parks.

[FR Doc. 2016–27218 Filed 11–10–16; 8:45 am]

BILLING CODE 4333–15–P

FEDERAL REGISTER

Vol. 81 Monday,

No. 219 November 14, 2016

Part V

The President

Proclamation 9538—World Freedom Day, 2016

Proclamation 9539—Veterans Day, 2016

Notice of November 9, 2016—Continuation of the National Emergency With Respect to Burundi

Federal Register
Vol. 81, No. 219
Monday, November 14, 2016

Presidential Documents

Title 3—

The President

Proclamation 9538 of November 8, 2016

World Freedom Day, 2016

By the President of the United States of America

A Proclamation

The Berlin Wall stood in the city it divided for nearly 30 years, separating families and loved ones and embodying the authoritarianism that reigned in Communist states throughout the Cold War. On November 9, 1989, with the courage of their convictions and a longing to forge their own destinies, Germans from both the East and West sides of the Wall celebrated history as a defining symbol of the Iron Curtain collapsed. Twenty-seven years later, we pay tribute to the unyielding determination of those who chose unity over division, and we rededicate ourselves to carrying this spirit forward wherever core tenets of democracy and liberty are at stake.

When President John F. Kennedy declared in West Berlin that ''when one man is enslaved, all are not free,'' he captured the irrevocable truth of the work that remains to this day. Our world is more prosperous and free than at any time in our history, with more people than ever before choosing their leaders through free elections and living in democracies with greater respect for human rights. But such liberty will not emerge across the globe in a single wave—building strong, democratic institutions and maintaining robust civil societies is the work of generations, and it is up to each of us to put our shoulders to the wheel of progress and fight for the future we seek. Whether in quiet struggle or boisterous protest, the Berliners who endured the division the Berlin Wall created and stood for remind us of the necessity to never abandon the values that have brought us as far as we are today.

For centuries, people of every nation have borne witness to great strife and tension in our ever-changing world—but we have proven we can always choose a better course through our relentless pursuit of freedom. Across oceans and continents, in recognition of World Freedom Day, let us reaffirm our commitment to carrying forward the enduring celebration of liberty that defined the fall of the Berlin Wall.

NOW, THEREFORE, I, BARACK OBAMA, President of the United States of America, by virtue of the authority vested in me by the Constitution and the laws of the United States, do hereby proclaim November 9, 2016, as World Freedom Day. I call upon the people of the United States to observe this day with appropriate ceremonies and activities, reaffirming our dedication to freedom and democracy.

IN WITNESS WHEREOF, I have hereunto set my hand this eighth day of November, in the year of our Lord two thousand sixteen, and of the Independence of the United States of America the two hundred and forty-first.

[FR Doc. 2016–27496
Filed 11–10–16; 11:15 am]
Billing code 3295–F7–P

Presidential Documents

Proclamation 9539 of November 8, 2016

Veterans Day, 2016

By the President of the United States of America

A Proclamation

America has long stood as a beacon of hope and opportunity, and few embody that spirit here at home and beyond our borders more than the members of our Armed Forces. Soldiers, Sailors, Airmen, Marines, and Coast Guardsmen are part of an unbroken chain of brave patriots who have served our country with honor and made tremendous sacrifices so that we may live free. On Veterans Day, we salute the women and men who have proudly worn the uniform of the United States of America and the families who have served alongside them, and we affirm our sacred duty as citizens to express our enduring gratitude, both in words and in actions, for their service.

Our country has the best-trained and best-equipped military force in the world, and we need to make sure we have the most supported and respected veterans in the world. We are a Nation that leaves no one behind, and my Administration has made historic investments to provide veterans access to the resources and education they need to share in our Nation's promise when they return home. Partnering with community leaders across America, First Lady Michelle Obama and Dr. Jill Biden's Joining Forces initiative works to ensure our country's heroes can thrive by combatting veteran homelessness, promoting their emotional well-being, and advancing employment training and placement—and we have made great progress. Today, the unemployment rate for veterans is lower than the national average, and veteran homelessness has been nearly cut in half since 2010. We also recognize that some of these courageous men and women have faced and overcome profound challenges, both physically and emotionally, in defense of our freedom. We must continue to provide high quality health care to our veterans and make sure they have the support they have earned and deserve.

The example our Nation's veterans set throughout their lives is a testament to the drive and perseverance that define the American character. Let us uphold our obligations to these heroic individuals and never forget those who paid the ultimate price for our liberty. On this day and throughout the year, may we sustain their lasting contributions to our Nation's progress and carry forward their legacy by building a future that is stronger, safer, and freer for all.

With respect for, and in recognition of, the contributions our service members have made to the cause of peace and freedom around the world, the Congress has provided (5 U.S.C. 6103(a)) that November 11 of each year shall be set aside as a legal public holiday to honor our Nation's veterans.

NOW, THEREFORE, I, BARACK OBAMA, President of the United States of America, do hereby proclaim November 11, 2016, as Veterans Day. I encourage all Americans to recognize the valor and sacrifice of our veterans through appropriate public ceremonies and private prayers, and by observing 2 minutes of silence for our Nation's veterans. I call upon Federal, State, and local officials to display the flag of the United States and to participate in patriotic activities in their communities. I call on all Americans, including

civic and fraternal organizations, places of worship, schools, and communities to support this day with commemorative expressions and programs.

IN WITNESS WHEREOF, I have hereunto set my hand this eighth day of November, in the year of our Lord two thousand sixteen, and of the Independence of the United States of America the two hundred and forty-first.

[FR Doc. 2016–27497
Filed 11–10–16; 11:15 am]
Billing code 3295–F7–P

Presidential Documents

Notice of November 9, 2016

Continuation of the National Emergency With Respect to Burundi

On November 22, 2015, by Executive Order 13712, I declared a national emergency to deal with the unusual and extraordinary threat to the national security and foreign policy of the United States constituted by the situation in Burundi, which has been marked by the killing of and violence against civilians, unrest, the incitement of imminent violence, and significant political repression, and which threatens the peace, security, and stability of Burundi.

The situation in Burundi continues to pose an unusual and extraordinary threat to the national security and foreign policy of the United States. For this reason, the national emergency declared on November 22, 2015, to deal with that threat must continue in effect beyond November 22, 2016. Therefore, in accordance with section 202(d) of the National Emergencies Act (50 U.S.C. 1622(d)), I am continuing for 1 year the national emergency declared in Executive Order 13712.

This notice shall be published in the *Federal Register* and transmitted to the Congress.

THE WHITE HOUSE,
November 9, 2016.

[FR Doc. 2016–27498
Filed 11–10–16; 11:15 am]
Billing code 3295–F7–P

Reader Aids

Federal Register

Vol. 81, No. 219

Monday, November 14, 2016

CUSTOMER SERVICE AND INFORMATION

Federal Register/Code of Federal Regulations

General Information, indexes and other finding aids	**202–741–6000**
Laws	**741–6000**

Presidential Documents

Executive orders and proclamations	**741–6000**
The United States Government Manual	**741–6000**

Other Services

Electronic and on-line services (voice)	**741–6020**
Privacy Act Compilation	**741–6050**
Public Laws Update Service (numbers, dates, etc.)	**741–6043**

ELECTRONIC RESEARCH

World Wide Web

Full text of the daily Federal Register, CFR and other publications is located at: **www.fdsys.gov.**

Federal Register information and research tools, including Public Inspection List, indexes, and Code of Federal Regulations are located at: **www.ofr.gov.**

E-mail

FEDREGTOC (Daily Federal Register Table of Contents Electronic Mailing List) is an open e-mail service that provides subscribers with a digital form of the Federal Register Table of Contents. The digital form of the Federal Register Table of Contents includes HTML and PDF links to the full text of each document.

To join or leave, go to **https://public.govdelivery.com/accounts/USGPOOFR/subscriber/new**, enter your email address, then follow the instructions to join, leave, or manage your subscription.

PENS (Public Law Electronic Notification Service) is an e-mail service that notifies subscribers of recently enacted laws.

To subscribe, go to **http://listserv.gsa.gov/archives/publaws-l.html** and select *Join or leave the list (or change settings);* then follow the instructions.

FEDREGTOC and **PENS** are mailing lists only. We cannot respond to specific inquiries.

Reference questions. Send questions and comments about the Federal Register system to: **fedreg.info@nara.gov**

The Federal Register staff cannot interpret specific documents or regulations.

CFR Checklist. Effective January 1, 2009, the CFR Checklist no longer appears in the Federal Register. This information can be found online at **http://bookstore.gpo.gov/.**

FEDERAL REGISTER PAGES AND DATE, NOVEMBER

75671–76270 1
76271–76492 2
76493–76842 3
76843–78020 4
78021–78496 7
78497–78700 8
78701–78898 9
78899–79380 10
79381–79990 14

CFR PARTS AFFECTED DURING NOVEMBER

At the end of each month the Office of the Federal Register publishes separately a List of CFR Sections Affected (LSA), which lists parts and sections affected by documents published since the revision date of each title.

2 CFR

Proposed Rules:
1103 78356
1104 78356
1108 78360
1120 78369
1122 78376
1125 78356
1126 78382
1128 78382
1130 78382
1132 78382
1134 78382
1136 78382
1138 78382

3 CFR

Proclamations:
9529 76267
9530 76269
9531 76485
9532 76487
9533 76833
9534 76835
9535 76837
9536 76839
9537 76841
9538 79985
9539 79987

Executive Orders:
13745 76493
13746 78697
13747 78701

Administrative Orders:
Memorandums:
Memorandum of September 30, 2016 76483
Notices:
Notice of October 31, 2016 76491
Notice of November 3, 2016 78495
Notice of November 8, 2016 79379
Notice of November 9, 2016 79989

5 CFR

315 78497
1820 78021
2638 76271
3501 76288

7 CFR

210 75671
220 75671
226 75671
250 75683

Proposed Rules:
56 78057
62 78057
70 78057

9 CFR

112 78499

10 CFR

Ch. I 78021
72 78022
429 ..... 79224, 79261
430 79261
431 ..... 79224, 79261

Proposed Rules:
34 78732
73 78062
430 76877
431 75742
460 78733

11 CFR

Proposed Rules:
1 76416
2 76416
4 76416
5 76416
6 76416
7 76416
100 76416
102 76416
103 76416
104 76416
105 76416
106 76416
108 76416
109 76416
110 76416
111 76416
112 76416
114 76416
116 76416
200 76416
201 76416
300 76416
9002 76416
9003 76416
9004 76416
9007 76416
9032 76416
9033 76416
9034 76416
9035 76416
9036 76416
9038 76416
9039 76416

12 CFR

708a 76495
708b 76495
747 78028
790 76495
1200 76291
1201 76291
1229 76291
1238 76291

1239 76291
1261 76291
1264 76291
1266 76291
1267 76291
1269 76291
1270 76291
1273 76291
1274 76291
1278 76291
1281 76291
1282 76291
1290 76291
1291 76291

Proposed Rules:
Regulation H 78063
22 78063
208 78063
326 75753
339 78063
391 75753
614 78063
701 78748
760 78063

13 CFR

Proposed Rules:
300 79394
301 79394
302 79394
303 79394
304 79394
305 79394
307 79394
309 79394
314 79394

14 CFR

29 ....78707, 78708
39 ....75684, 75686, 75687, 76843, 76845, 76848, 76851, 78708, 78711, 78899, 79381, 79384
71 ....76854, 76855, 76857, 76858, 78902, 78904, 78905, 78906
73 78029
234 ....76300, 76800
241 76300
244 76800
250 76800
255 76800
256 76800
257 76800
259 76800
399 76800

Proposed Rules:
39 ....75757, 75759, 75761, 75762, 76532, 76540, 76883, 76885, 78080, 78083, 78085, 78944, 78947, 79395
71 ....76886, 76888, 78088, 78756, 78949

15 CFR

730 78714
738 76859
740 76859
742 76859
744 78714
746 76859

Proposed Rules:
923 78514

17 CFR

Proposed Rules:
240 79122

18 CFR

Proposed Rules:
33 ....76542, 78756
35 78756
40 76542
45 76542
153 76542
157 76542
340 76542
341 76542
342 ....76315, 76542
343 ....76315, 76542
344 76542
345 76542
346 76542
347 76542
357 76315
380 76542

20 CFR

Proposed Rules:
220 78757

21 CFR

5 78033
10 78500
73 75689
74 75689
117 75692
507 75693
1308 79389

Proposed Rules:
1 ....78526, 79400
101 76323
573 78528

25 CFR

170 78456
517 76306
584 76306
585 76306

26 CFR

1 ....76496, 76497, 78908

Proposed Rules:
1 ....76542, 76544

29 CFR

Proposed Rules:
1208 79400

31 CFR

Ch. V 76861
501 76861
593 76861
1010 ....76863, 78715
1020 76863
1021 76863
1022 76863
1023 76863
1024 76863
1025 76863
1026 76863

32 CFR

199 76307
635 78911

Proposed Rules:
21 78442
22 78442
32 78442
33 78442
34 78442
37 78442
221 76325
637 78951

33 CFR

100 ....76865, 78041, 78507
117 ....76512, 76513, 76866, 78912, 79393
165 ....75694, 76513, 78722

Proposed Rules:
117 ....76889, 78952
165 ....76545, 78759

34 CFR

30 75926
668 75926
674 75926
682 75926
685 75926
686 75926

36 CFR

1 77972
9 77972

37 CFR

2 78042
6 76867
7 78042
201 75695

Proposed Rules:
401 78090
404 78090

40 CFR

49 78043
52 ....78043, 78048, 78052, 78688, 78691, 78722
62 75708
81 ....78688, 78691
180 ....78509, 78913, 78917, 78923, 78928, 78932, 78937

Proposed Rules:
52 ....75764, 76547, 76891, 78097, 78529, 78954
62 75780
63 76550
79 78966
80 78966
81 76891
241 75781

42 CFR

409 76702
413 77834
414 ....77008, 77834, 79562
416 79562
419 79562
482 79562
484 76702
486 79562
488 79562
494 77834
495 ....77008, 79562

Proposed Rules:
440 78760
494 76899

43 CFR

Proposed Rules:
8360 76905

44 CFR

64 ....76870, 78054

45 CFR

1370 76446

47 CFR

1 79894
2 79894
10 75710
11 ....75710, 76515
15 79894
25 79894
30 79894
73 76220
101 79894

Proposed Rules:
10 78539
11 78539
25 76551
73 79407

48 CFR

212 78012
231 78008
242 78008
247 78011
252 78011

Proposed Rules:
202 78015
215 ....78014, 78015
225 78015
252 ....78014, 78015

49 CFR

395 75727
571 78724
800 75729
803 75729
804 75729

Proposed Rules:
393 78103
Ch. V 78103
571 78103

50 CFR

17 76311
28 79948
29 79948
622 78941
635 76874
648 ....75731, 76516, 78728, 78942
679 ....75740, 76530, 76875

Proposed Rules:
17 75801
18 78560
28 79408
29 79408
622 76908
635 79409
665 75803

LIST OF PUBLIC LAWS

Note: No public bills which have become law were received by the Office of the Federal Register for inclusion in today's **List of Public Laws**.

Last List October 19, 2016

Public Laws Electronic Notification Service (PENS)

PENS is a free electronic mail notification service of newly enacted public laws. To subscribe, go to *http://listserv.gsa.gov/archives/publaws-l.html*

Note: This service is strictly for E-mail notification of new laws. The text of laws is not available through this service. **PENS** cannot respond to specific inquiries sent to this address.