SATELLITE LAUNCHES IN THE PRC: LORAL

GPO

On February 15, 1996, a Long March 3B rocket carrying the U.S.-built Intelsat 708 satellite crashed just after lift off from the Xichang launch center in the People's Republic of China. This was the third launch failure in 38 months involving the PRC's Long March series of rockets carrying U.S.-built satellite payloads. It also was the first commercial launch using the new Long March 3B. These events attracted intense attention from the international space launch insurance industry, and eventually led to a review of the PRC launch failure investigation by Western aerospace engineers.

The activities of the Western aerospace engineers who participated on the review team — the Independent Review Committee — sparked allegations of violations of U.S. export control regulations. The review team was accused of performing an unlicensed defense service for the PRC that resulted in the improvement of the reliability of the PRC's military rockets and ballistic missiles.

The Intelsat 708 satellite was manufactured by Space Systems/Loral (Loral) under contract to Intelsat, the world's largest commercial satellite communications services provider. Loral is wholly owned by Loral Space & Communications, Ltd.

China Great Wall Industry Corporation, the PRC state-controlled missile, rocket, and launch provider, began an investigation into the launch failure. On February 27, 1996, China Great Wall Industry Corporation reported its determination that the Long March 3B launch failure was caused by a broken wire in the inner frame of the inertial measurement unit within the guidance system of the rocket. In March 1996, representatives of the space launch insurance industry insisted that China Great Wall Industry Corporation arrange for an independent review of the PRC failure investigation.

In early April 1996, China Great Wall Industry Corporation invited Dr. Wah Lim, Loral's Senior Vice President and General Manager of Engineering and Manufacturing, to chair an Independent Review Committee that would review the PRC launch failure investigation. Lim then recruited experts to participate in the Independent Review Committee: four senior engineers from Loral, two from Hughes

Space & Communications, one from Daimler-Benz Aerospace, and retired experts from Intelsat, British Aerospace, and General Dynamics.

The Independent Review Committee members and staff met with PRC engineers during meetings in Palo Alto, California, and in Beijing. During these meetings the PRC presented design details of the Long March 3B inertial measurement unit, and the committee reviewed the failure analysis performed by the PRC.

The Independent Review Committee took issue with the conclusions of the PRC investigation because the PRC failed to sufficiently explain the telemetry data obtained from the failed launch.

The Independent Review Committee members proceeded to generate a Preliminary Report, which was transmitted to China Great Wall Industry Corporation in May 1996 without prior review by any U.S. Government authority. Before the Independent Review Committee's involvement, the PRC team had concluded that the most probable cause of the failure was the *inner frame* of the inertial measurement unit. The Independent Review Committee's draft report that was sent to the PRC pointed out that the failure could also be in two other places: the inertial measurement unit *follow-up frame*, or an open loop in the feedback path. The Independent Review Committee recommended that the PRC perform tests to prove or disprove all three scenarios.

After receiving the Independent Review Committee's report, the PRC engineers tested these scenarios and, as a result, ruled out its original failure scenario. Instead, the PRC identified the follow-up frame as the source of the failure. The PRC final report identified the power amplifier in the follow-up frame to be the root cause of the failure.

According to the Department of Defense, the timeline and evidence suggests that the Independent Review Committee very likely led the PRC to discover the true failure of the Long March 3B guidance platform.

At the insistence of the State Department, both Loral and Hughes submitted "voluntary" disclosures documenting their involvement in the Independent Review Committee. In its disclosure, Loral stated that "Space Systems/Loral per-

sonnel were acting in good faith and that harm to U.S. interests appears to have been minimal." Hughes' disclosure concluded that there was no unauthorized export as a result of the participation of Hughes employees in the Independent Review Committee.

The materials submitted by both Loral and Hughes in their disclosures to the State Department were reviewed by several U.S. government offices, including the State Department, the Defense Technology Security Administration, the Defense Intelligence Agency, and other Defense Department agencies.

The Defense Department assessment concluded that "Loral and Hughes committed a serious export control violation by virtue of having performed a defense service without a license . . . "

The State Department referred the matter to the Department of Justice for possible criminal prosecution.

The most recent review of the Independent Review Committee matter was performed by an interagency review team in 1998 to reconcile differences in the assessments of the other agencies. That interagency team concluded:

- **The actual cause of the Long March 3B failure may have been discovered more quickly by the PRC as a result of the Independent Review Committee report**
- **Advice given to the PRC by the Independent Review Committee could reinforce or add vigor to the PRC's design and test practices**
- **The Independent Review Committee's advice could improve the reliability of the PRC's rockets**
- **The technical issue of greatest concern was the exposure of the PRC to Western diagnostic processes, which could lead to improvements in reliability for all PRC missile and rocket programs**

INTELSAT 708 LAUNCH FAILURE

LORAL INVESTIGATION PROVIDES PRC WITH SENSITIVE INFORMATION

Overview of Events

On February 15, 1996, the Intelsat 708 satellite was launched on a Long March 3B rocket from the Xichang Satellite Launch Center in the PRC.[1] Even before clearing the launch tower, the rocket tipped over and continued on a flight trajectory roughly parallel to the ground.[2] After only 22 seconds of flight, the rocket crashed into a nearby hillside, destroying the rocket and the Intelsat satellite it carried.

The crash created an explosion that was roughly equivalent to 20 to 55 tons of TNT. It destroyed a nearby village. According to official PRC reports, six people died in the explosion,[3] but other accounts estimate that 100 people died as a result of the crash.[4]

The Intelsat 708 satellite was manufactured by a U.S. company, Space Systems/Loral (Loral), under contract to Intelsat, the world's largest commercial satellite communications services provider.[5] In October 1988, Intelsat had awarded a contract to Loral to manufacture several satellites in a program known as Intelsat VII. That contract had a total value of nearly $1 billion.

Intelsat subsequently exercised an option under that contract for Loral to supply four satellites — known as the Intelsat VIIA series — including the Intelsat 708 satellite.[6]

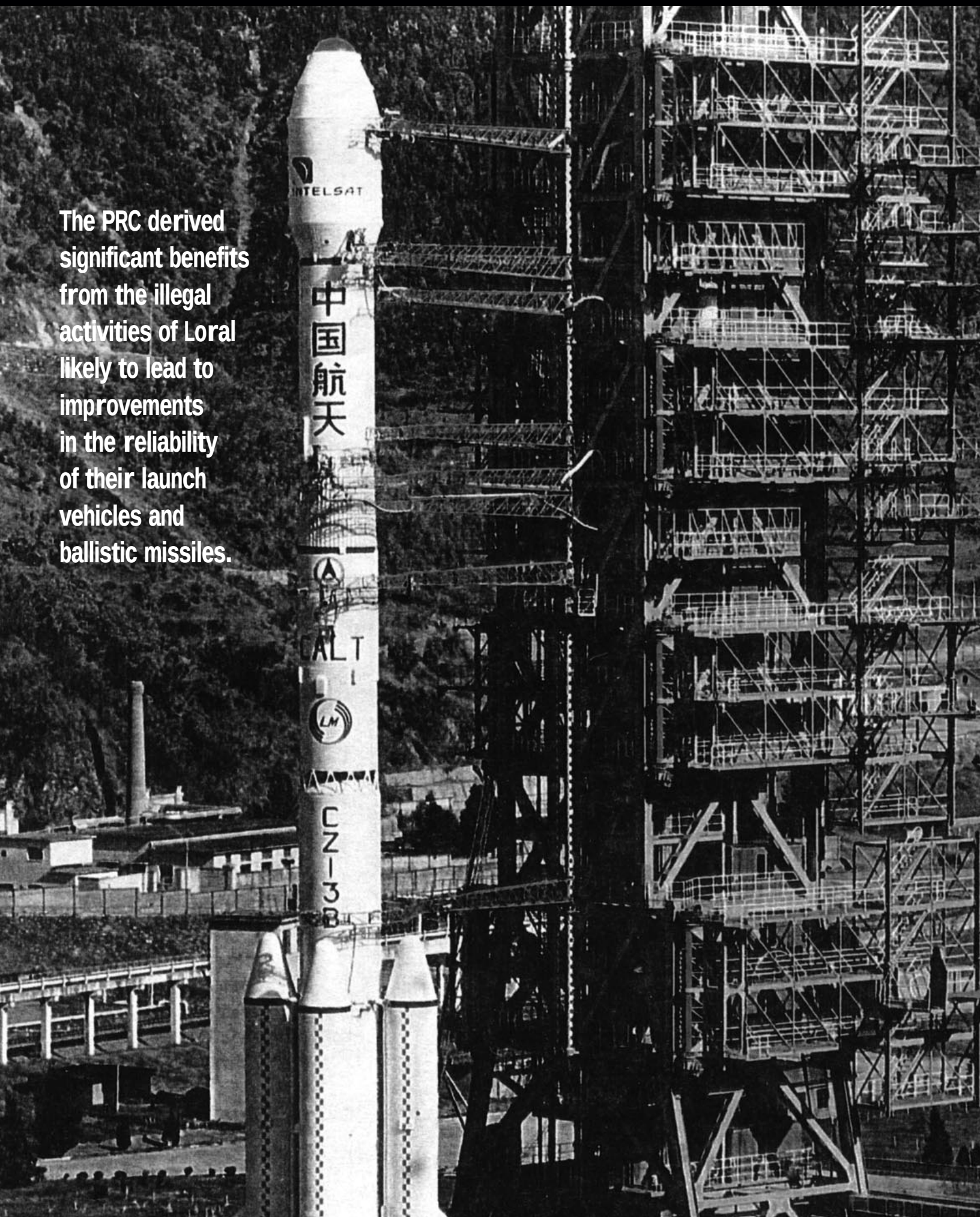

The PRC derived significant benefits from the illegal activities of Loral likely to lead to improvements in the reliability of their launch vehicles and ballistic missiles.

Photographic Series of Intelsat 708 Launch/Crash

- On February 15 1996, the Intelsat 708 satellite manufactured by Loral was readied for launch atop a PRC Long March 3B rocket at Xichang (1).
- Immediately after lift-off, the rocket began to tip over and veer off course (2).
- Video footage of the launch showed the rocket pitching into a horizontal flight trajectory (3, 4, 5, 6).
- It crashed into a nearby hillside (7) destroying the rocket and Intelsat payload. The rocket's impact with the ground created an explosion equivalent to 20 to 55 tons of TNT, destroying a nearby village and killing an estimated 100 people.

1

2

3

4

5

6

7

Intelsat 708 Wreckage Recovery

PLA soldiers were involved in recovering wreckage from the Intelsat 708 launch crash. Members of the Intelsat and Loral team in the PRC were not allowed by PRC officials to visit the site until late in the afternoon of the launch failure. Examination of recovered debris by Loral engineers in the U.S. determined that the satellite's encryption devices were not recovered from the crash site.

1

2

In April 1992, Intelsat contracted with China Great Wall Industry Corporation for the PRC state-owned company to launch the Intelsat VIIA series of satellites into the proper orbit using PRC Long March rockets.[7] Low price and "politics" were important factors in selecting the PRC launch services.[8]

In March 1996, following the Intelsat 708 launch failure, Intelsat terminated its agreement with China Great Wall Industry Corporation for additional launch services.[9]

The PRC's Launch Failure Investigation

China Great Wall Industry Corporation created two groups of PRC nationals to investigate the launch failure. These were the Failure Analysis Team and the Failure Investigative Committee. These two committees reported to an Oversight Committee.

On February 27, 1996, China Great Wall Industry Corporation reported its determination that the Long March 3B launch failure was caused by a failure in the inertial measurement unit within the control system of the rocket.[10] The inertial measurement unit is a component that provides an attitude reference for the rocket, basically telling it which way is up.[11]

The Asia Pacific Telecommunications Insurance Meeting

On March 14, 1996, a group of space launch insurance representatives met in Beijing with representatives of Hughes, the PRC-controlled Asia Pacific Telecommunications Satellite Co., Ltd., and China Great Wall Industry Corporation. The purpose of the meeting was to examine the risks associated with the upcoming launch of the Apstar 1A satellite that was scheduled for July 3, 1996 on a Long March 3 rocket, in the wake of the February 15 Long March 3B crash.[12]

The PRC assured those at the meeting that the launch was not at risk because the Long March 3 rocket uses a different kind of inertial measurement unit than the one that failed on the Long March 3B.[13]

At that meeting, Paul O'Connor, from the J&H Marsh & McLennan insurance brokerage firm, reportedly insisted that the PRC do two things before the space insurance industry would insure future launches from the PRC: first, produce a final report

on the cause of the Long March 3B launch failure; and second, arrange for an independent review of the PRC failure investigation.[14]

The PRC's Creation of an 'Independent Review Committee'

In early April 1996, China Great Wall Industry Corporation invited both Loral and Hughes Space & Communications (Hughes) to participate in an Independent Review Committee that would review the PRC launch failure investigation.[15] The PRC then invited Dr. Wah Lim, Loral's Senior Vice President and General Manager of Engineering and Manufacturing, to chair the committee.[16]

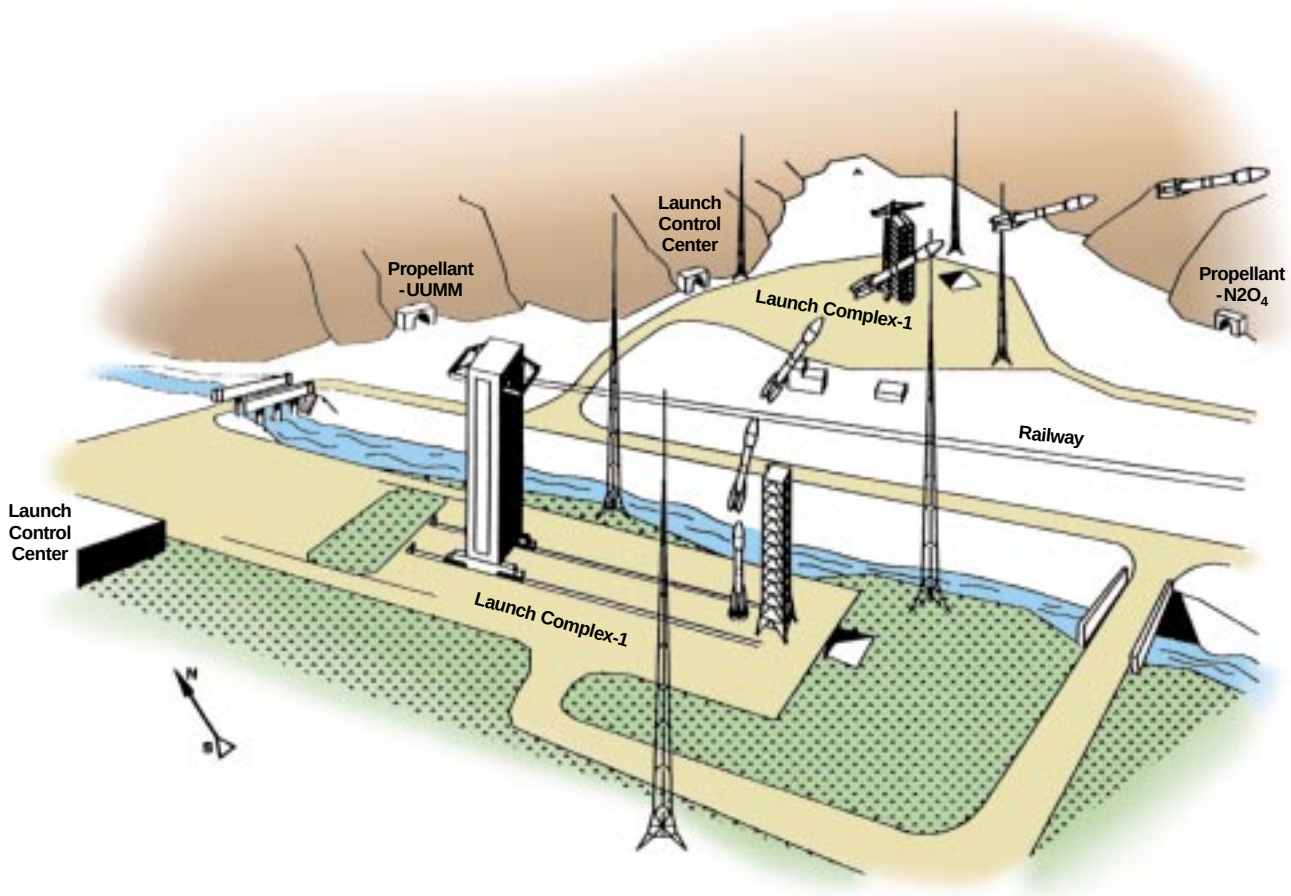

This illustration depicts the Long March 3B veering off course soon after lift-off and crashing in nearby foothills seconds later. The PRC's China Great Wall Industry Corporation (GCGWIC) repared this illustration as a part of a presentation to show what it (incorrectly) claimed was the cause of the failure of the LM-3B launch. Loral and Hughes later shared the true cause of the failure withGCGWIC.

Lim impaneled the Independent Review Committee with experts from Loral, Hughes, and Daimler-Benz Aerospace, and retired experts from General Dynamics, Intelsat, and British Aerospace.[17]

The Independent Review Committee's Meetings

The Independent Review Committee held two sets of official meetings.[18] The first set of meetings was from April 22 to 24, 1996, at Loral's offices in Palo Alto, California.[19] The second set of meetings was from April 30 to May 1, 1996, in Beijing.[20]

At these meetings, the Independent Review Committee members reviewed the extensive reports furnished by China Great Wall Industry Corporation documenting the PRC launch failure investigation, and provided the PRC with numerous technical questions regarding the material.[21] The committee's activities also included tours of PRC assembly and test facilities for guidance and control equipment. The Independent Review Committee members caucused at their hotel in Beijing on April 30 to discuss and assess the PRC investigation privately.[22]

An aborted third round of Independent Review Committee meetings was scheduled for June 1996. However, the U.S. Government issued a cease and desist letter to both Loral and Hughes, ordering the companies to stop all activity in connection with the failure review. The letter also requested each company to disclose the facts related to, and circumstances surrounding, the Independent Review Committee.[23]

The Independent Review Committee activity was not authorized by any U.S. Government export license or Technical Assistance Agreement.[24] Loral had obtained two export licenses (No. 533593 and No. 544724) from the State Department in 1992 and 1993 to allow the launch of the Intelsat 708 satellite in the PRC. Neither of those licenses authorized any launch failure investigative activity.[25]

Loral was aware from the start of the Independent Review Committee's meetings that it did not have a license for the Independent Review Committee activity.[26]

The Independent Review Committee meetings were not attended by any U.S. Government monitors, as almost certainly would have been required had there been an export control license.

The Independent Review Committee's Report

Lim had promised the PRC that the Independent Review Committee would report its preliminary findings by May 10, 1996.[27] This deadline was driven by Loral's need to determine, by that date, whether its Mabuhay satellite would be launched on a PRC rocket as planned.

Following the meeting of the Independent Review Committee in Beijing, the committee members collaborated by facsimile and e-mail to generate a report of their findings. Loral engineer Nick Yen, who was the Secretary for the Independent Review Committee, collected input from the committee members and compiled the report. British committee member John Holt drafted the technical section of the report, with inputs from the other committee members.[28]

A draft of the Independent Review Committee Preliminary Report was completed by May 7, 1996; the Preliminary Report was completed on May 9, 1996.

Substance of the Preliminary Report

The Independent Review Committee's Preliminary Report was approximately 200 pages in length. It comprised:

- **Meeting minutes**
- **Independent Review Committee questions and China Great Wall Industry Corporation answers**
- **Findings**
- **Short-term and long-term recommendations**
- **The Independent Review Committee charter and schedule**
- **The Independent Review Committee membership roster**
- **Appendices**[29]

The thrust of the recommendations presented in the report was:

Short-Term Recommendations[30]

1) **An explanation of the total flight behavior is essential** to fully confirm the failure mode. A mathematical numerical solution is recommended immediately, to be followed by a hardware in-the-loop simulation test when possible.

2) **The detailed design of the motor and its wiring should be studied** to either: a) preclude harness motion during gimbal motion or b) alleviate the impact of unavoidable deflection on solder joint integrity.

3) **Higher quality control and quality standards** in the manufacturing process need to be implemented and adhered to.

4) **The China Academy of Launch Technology should re-examine the environmental test plan for all avionics equipment.** It is the Independent Review Committee's opinion that the environmental tests performed by the China Academy of Launch Technology might not be adequate for meeting the requirements of the expected maximum flight loads, including acoustic noises, or detecting the defects in the flight hardware.

5) **The Independent Review Committee is very concerned over the range safety issues in the areas of operation safety, launch safety and personal safety in general.** Due to the difference in operations and requirements by various customers/satellite contractors of China Great Wall Industry Corporation, it is not suitable for the Independent Review Committee to make generic recommendations for overall implementation requirements. However, China Aerospace Corporation and China Great Wall Industry Corporation should carefully review the Action Items, #19, #20, and #21,

of the first committee meeting and propose a well thought implementation plan to be reviewed, agreed, and accepted by China Great Wall Industry Corporation's individual customer/prime satellite contractor.

Long-Term Recommendations[31]

1) **Quality control philosophy and practice of the fabrication, assembly and test of the inertial measurement unit should be strengthened.** Personnel should be trained periodically in careful handling and cleanliness concerns. Cleanliness and careful test handling should be emphasized and maintained at all times.

2) **Good design and good quality control can achieve the desired reliability of hardware. However, a design with adequate redundancy** can also achieve the same desired reliability. Therefore, it should be strongly considered in avoiding critical single point (or path) failure.

The Report Goes to the PRC

On May 7, 1996, Loral's Nick Yen, the Secretary of the Independent Review Committee, faxed the draft Preliminary Report to the committee members, and to China Great Wall Industry Corporation.

On May 10, 1996, the final Independent Review Committee Preliminary Report, less attachments, was faxed by Yen to China Great Wall Industry Corporation.[32] The same day, the complete Preliminary Report was express-mailed by Yen to the Independent Review Committee members.[33]

On May 13, Yen also faxed the Preliminary Report to a hotel in Beijing for Paul O'Connor of J&H Marsh & McLennan, who was a guest there.[34]

None of these transmitted documents was submitted to the U.S. Government for review prior to its transmission to the PRC.[35]

Defense Department Analyst Discovers the Activities of the Independent Review Committee

The May 13-19, 1996, issue of *Space News*, a widely-read industry publication, contained an article stating that Wah Lim, as Chairman of the Independent Review Committee, had faxed the committee's report of the failure review to the PRC.[36]

On or about May 14, 1996, Robert Kovac, an Export Analyst in the Defense Department's Defense Technology Security Administration (DTSA), read the *Space News* article and became concerned that the Independent Review Committee's activities were not conducted under a license. Kovac was particularly alarmed that, according to the article, a failure review report had been distributed to the PRC.

Kovac immediately acted on his concern. He called Loral's Washington representative and asked whether the Independent Review Committee's activities had been conducted under a license. Loral's response was to propose a meeting with Kovac and others for the following day.

On May 15, 1996, Loral's Export Control Officer met with licensing personnel at the State Department and the Defense Department to report on the Independent Review Committee's activities.

The Defense Department advised the Loral officials to halt all Independent Review Committee activity and consider submitting a "voluntary" disclosure to the State Department.

The State Department made similar recommendations, and sent letters to both Loral and Hughes soon afterward that reported that the State Department had reason to believe that the companies may have participated in serious violations of the International Traffic in Arms Regulations.

The State Department also requested that the companies immediately cease all related activity that might require approval, provide a full disclosure, and enumerate all releases of information that should have been controlled under the International Traffic in Arms Regulations.

Loral and Hughes Investigate the Matter

On May 23, 1996, Loral engaged the law firm of Feith & Zell of Washington, D.C., to conduct a limited investigation, as counsel for Loral, of the events related to the Independent Review Committee. That investigation included document collection and review, and interviews of Loral employees. On June 17, 1996, a "voluntary" disclosure was submitted to the State Department by Feith & Zell on behalf of Loral.[37]

In that disclosure, Loral stated that its procedures for implementing export control laws and regulations were deficient, but that Loral was implementing corrective measures. Also, Loral's disclosure concluded that "Loral personnel were acting in good faith and that harm to U.S. interests appears to have been minimal." [38]

Hughes' General Counsel's office began an investigation into the Independent Review Committee matter in early June 1996, after receiving the State Department letter advising that Hughes may have been a party to serious violations of the International Traffic in Arms Regulations. Hughes' investigation report was submitted to the State Department on June 27, 1996. The Hughes report concluded that there was no unauthorized export as a result of the participation of Hughes employees in the Independent Review Committee.

The Hughes employees reportedly advised Loral employees to obtain the appropriate State Department approvals prior to furnishing the documents to the PRC.[39]

The Aftermath: China Great Wall Industry Corporation Revises Its Findings on the Cause of the Accident

In September 1996, China Great Wall Industry Corporation discarded its original analysis, and in October 1996 made its final launch failure presentation to officials at Loral.

China Great Wall Industry Corporation determined that the root cause of the failure was a deterioration in the gold-aluminum wiring connections within a power amplifier for the follow-up frame torque motor in the inertial measurement unit. This was the very problem the Independent Review Committee had identified in their meetings with PRC officials and in the Preliminary Report.

U.S. Government Assessments of the Independent Review Committee's Report, and Referral to the Department of Justice

The materials submitted by both Loral and Hughes in their 1996 disclosures to the State Department were reviewed by several U.S. Government offices, including the State Department, the Defense Department, the Central Intelligence Agency, and an interagency review team.

The 1997 Defense Department assessment concluded that "Loral and Hughes committed a serious export control violation by virtue of having performed a defense service without a license . . . ."

Based on this assessment, the Defense Department recommended referral of the matter to the Department of Justice for possible criminal prosecution.

In July 1998, a U.S. Government interagency team conducted a review of the Independent Review Committee's activities and reported the following:

- **The actual cause of the Long March 3B failure may have been discovered more quickly by the PRC as a result of the Independent Review Committee's report**
- **Advice given to the PRC by the Independent Review Committee could reinforce or add vigor to the PRC's design and test practices**
- **The Independent Review Committee's advice could improve PRC rocket and missile reliability**
- **The technical issue of greatest concern was the exposure of the PRC to a Western diagnostic process**[40]

The interagency review also noted that the Long March 3B guidance system on which Loral and Hughes provided advice is not a likely candidate for use in future PRC intercontinental ballistic missiles. The Long March 3B guidance system is well suited for use on a rocket.

Details of the Failed Long March 3B-Intelsat 708 Launch and Independent Review Committee Activities

The specific details of the events surrounding the Long March 3B-Intelsat 708 launch failure and the Independent Review Committee are described in the remainder of this Chapter.

Background on Intelsat and Loral

Intelsat

The International Telecommunications Satellite Organization (Intelsat), headquartered in Washington, D.C., is an international not-for-profit cooperative of 143 member nations and signatories that was founded in 1964. Intelsat is the world's largest commercial satellite communications services provider. Its global satellite systems bring video, Internet, and voice/data services to users in more than 200 nations and on every continent.[41]

The member nations contribute capital in proportion to their relative use of the Intelsat system, and receive a return on their investment. Users pay a charge for all Intelsat services, depending on the type, amount, and duration of the service. Any nation may use the Intelsat system, whether or not it is a member. Intelsat operates as a wholesaler, providing services to end-users through the Intelsat member in each country. Some member nations have chosen to authorize several organizations to provide Intelsat services within their countries. Currently, Intelsat has more than 300 authorized customers.[42]

Intelsat includes two members from the PRC: China Telecom is a signatory, and Hong Kong Telecom is an investing entity. Their investment shares are 1.798 percent and 1.269 percent, respectively, giving the PRC a country total of 3.067 percent, which makes it the eighth largest ranking member nation.[43]

On January 2, 1999, Intelsat had a fleet of 19 high-powered satellites in geostationary orbit. These satellites include the Intelsat 5 and 5A, Intelsat 6, Intelsat 7 and 7A, and the Intelsat 8 and 8A families of satellites. The newest generation of Intelsat satellites, the Intelsat 9 series, is in production.[44]

Nine satellites were manufactured in the Intelsat VII and VIIA series. Loral manufactured this series of satellites, and they were launched during the period from 1993 to 1996.[45]

Intelsat VII and VIIA Series Satellites[46]

SATELLITE	ROCKET	LAUNCH DATE	LAUNCH RESULTS
701	Ariane 44 (France)	22 October 1993	Success
702	Ariane 44 LP(France)	17 June 1994	Success
703	Atlas II AS (US)	6 October 1994	Success
704	Atlas II AS (US)	10 January 1995	Success
705	Atlas II AS (US)	22 March 1995	Success
706	Ariane 44 LP(France)	17 May 1995	Success
707	Ariane 44 P (France)	14 March 1996	Success
708	Long March 3B (PRC)	15 February 1996	Failure
709	Ariane 44 LP (France)	15 June 1996	Success

Loral Space and Communications

Loral Space and Communications, Ltd., is one of the world's leading satellite communications companies and has substantial interests in the manufacture and operation of geosynchronous and low-earth-orbit satellite systems. The company is headquartered in New York City and is listed on the New York Stock Exchange. Bernard Schwartz is its Chairman. The company employs approximately 4,000 people.[47]

Loral Space and Communications, Ltd., owns Space Systems/Loral, one of the world's leading manufacturers of space systems. It also leads an international joint venture for the Globalstar system of satellites that is expected to be placed in service in 1999. Globalstar will support digital telephone service to handheld and fixed terminals worldwide. Loral Space and Communications, Ltd., together with its partners, will act as the Globalstar service provider in Canada, Brazil, and Mexico. Together with Qualcomm, it holds the exclusive rights to provide in-flight phone service using Globalstar in the United States. Loral Skynet, acquired from AT&T in March 1997, is a leading domestic satellite service provider.[48]

Space Systems/Loral

Space Systems/Loral (Loral) designs, builds, and tests satellites, subsystems, and payloads; provides orbital testing, launch services, and insurance procurement; and manages mission operations from its Mission Control Center in Palo Alto, California. Loral was formerly the Ford Aerospace and Communications Corporation. In 1990, Ford Aerospace was acquired by a group including Loral Space and Communications, Ltd., and re-named Space Systems/Loral. Loral is located in Palo Alto, California, and Robert Berry is its President.[49]

At the time of the Intelsat 708 failure, Loral was 51 percent owned by Loral Space and Communications, Ltd. The remainder was owned equally by four European aerospace and telecommunications companies: Aerospatiale, Alcatel Espace, Alenia Spazio S.p.A., and Daimler-Benz Aerospace AG. In 1997, Loral Space and Communications, Ltd. acquired the foreign partners' respective ownership interests in Loral.[50]

Loral is the leading supplier of satellites to Intelsat. Loral's other significant customers include the PRC-controlled Asia Pacific Telecommunications Satellite Co., Ltd., CD Radio, China Telecommunications Broadcast Satellite Corporation, Globalstar, Japan's Ministry of Transport, Mabuhay Philippines Satellite Corporation, MCI/News Corp., the National Aeronautics and Space Administration (NASA), the National Oceanic and Atmospheric Administration, PanAmSat, Skynet, and TCI. Loral employs approximately 3,100 people, has annual sales of approximately $1.4 billion, and has a backlog of orders for approximately 80 satellites.[51]

Intelsat 708 Launch Program

On April 24, 1992, Intelsat awarded a contract to China Great Wall Industry Corporation for the launch of Intelsat VIIA satellites into geosynchronous transfer orbit.[52]

On or about September 18, 1992, the State Department issued a license to Loral for the export to the PRC of technical data in support of technical discussions for the launch of an Intelsat VIIA satellite.[53] On or about July 14, 1993, the State Department issued an export license to Loral for the export of the Intelsat VIIA (708) satellite and associated equipment necessary for the launch.[54]

Sometime in 1994, representatives from Intelsat and Loral performed a site survey at the Xichang launch facility in the PRC. One of the Intelsat representatives who was involved in the launch described the facility as "primitive but workable."

On or about January 11, 1996, the Intelsat 708 satellite was shipped to Xichang.

The Intelsat 708 Launch Failure

On February 15, 1996, at approximately 3:00 a.m. local time, a PRC-manufactured Long March 3B rocket carrying the Intelsat 708 satellite crashed into a mountain side approximately 22 seconds after liftoff from the Xichang launch site. [55] Employees and family members of Loral witnessed the launch failure from Palo Alto through a video feed from the launch site.[56]

Members of the Intelsat and Loral team in the PRC were not allowed by PRC officials to visit the rocket debris field until late in the afternoon of that same day.

At least three different explanations have been offered as to why the Loral and Intelsat employees were not allowed onto the debris field for approximately 12 hours:

- **The first explanation** was that Loral and Intelsat employees were kept away from the debris field until safety hazards from the crash site could be neutralized
- **The second, as reported in the news media,** was that the delay had been imposed to give PRC officials time to seek out U.S. satellite encryption devices intended to protect the satellite command processor from unauthorized messages once the satellite was in orbit[57]
- **The third explanation, offered by at least one Loral employee,** was that the time delay gave the PRC an opportunity to clean up the probable human carnage that resulted from the crash

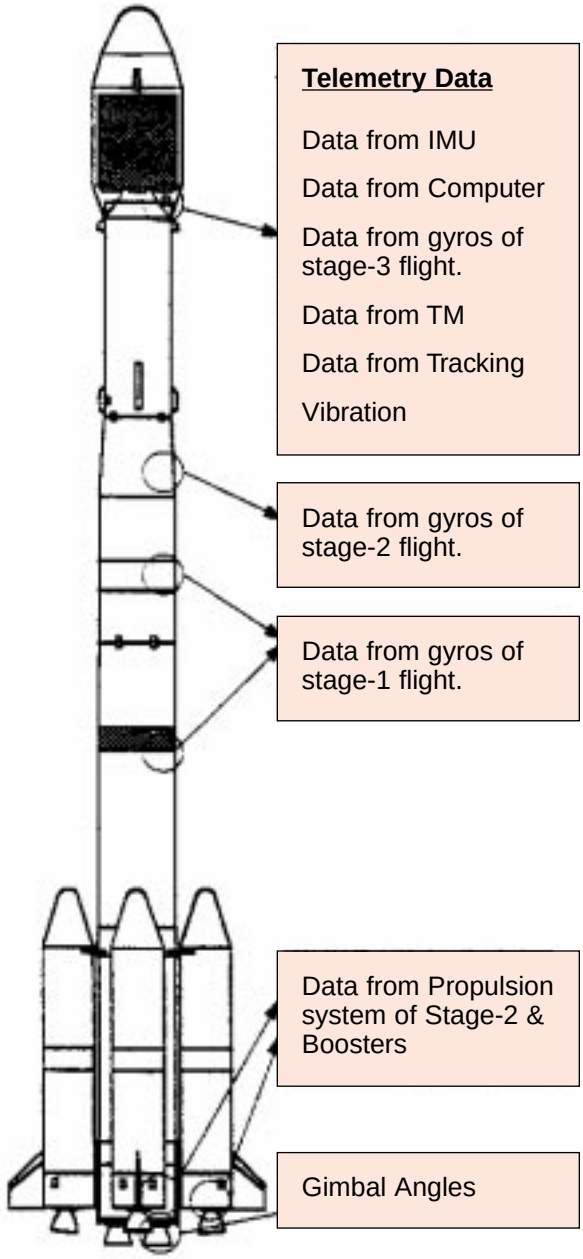

- **Telemetry Data**
  - * **Guidance & Control**
  - • **Propulsion**
  - • **Environment**
  - • **Timing**
- **Tracking Data**
- **Visual Information**
  - • **Video tapes**
  - • **Optional theodolite film**
- **Impact Area Survey**

Western analysts relied in part on telemetry data from the failed Long March 3B rocket to disprove the PRC's assertion about the cause of the crash, and to point to the true cause of the failure.

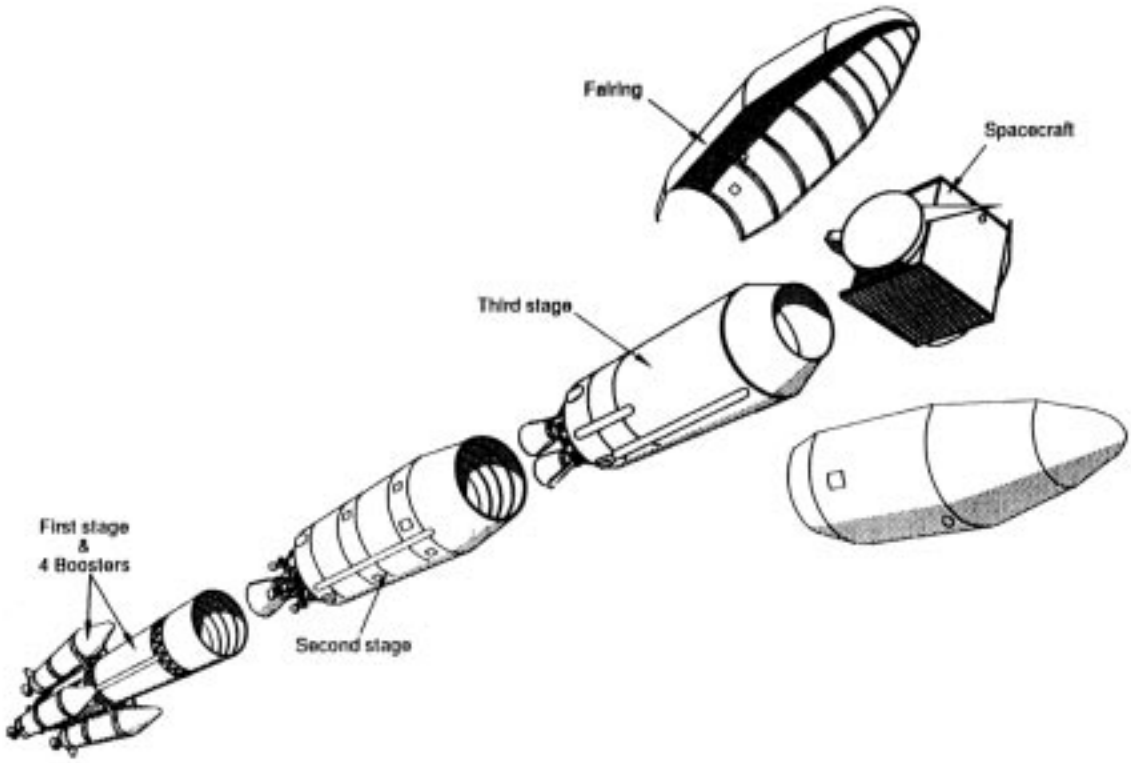

The Long March 3B used for the failed Intelsat 708 launch consisted of three stages plus the payload satellite enclosed by a fairing. In a normal launch, the stages of the rocket would fall away one by one as the satellite flew higher and reached its orbit. In the Intelsat 708 launch, the entire rocket veered off course and crashed before the three stages and the payload separated.

Once they were allowed to go to the site, members of the Loral team began collecting and separating satellite debris from the rocket debris. A rough inventory was done, and the satellite debris subsequently was crated and shipped back to Loral in Palo Alto for analysis.[58]

Upon examination by Loral engineers in Palo Alto, it was determined that the satellite's encryption devices had not, in fact, been recovered from the crash site.

Events Leading Up to the Creation of the Independent Review Committee

On or about February 27, 1996, two weeks after the failure, PRC engineers announced that they believed that the cause of the Intelsat 708 launch failure was the inertial platform of the control system.[59] This information was made public in an attempt to demonstrate that the PRC had identified the cause of the launch failure.

The interested parties included the aerospace industry in general, but particularly Loral, Hughes Space and Communications Corporation (Hughes), and the space launch insurance industry.

Hughes was scheduled to launch its Apstar 1A satellite on a Long March 3 rocket on or about April 1, 1996, less than two months after the Intelsat 708 crash. Even though the Apstar 1A satellite was scheduled for a different rocket, concern was still high in the insurance community.

On March 14, 1996, a meeting was held in Beijing involving Hughes; the PRC-controlled Asia Pacific Telecommunications Satellite Co., Ltd., owner of the Hughes-manufactured Apstar 1A; and the insurance underwriters for the Apstar 1A.[60]

The main information the PRC authorities, including the Asia Pacific Telecommunications Satellite representatives, sought to convey to the insurance underwriters was that their failure investigation relating to the Intelsat 708 launch had shown the cause to be a failure of the inertial measurement unit.[61] This is the rocket subsystem that provides attitude, velocity, and position measurements for guidance and control of the rocket.[62]

The PRC representatives stated that the inertial measurement unit used on the Long March 3B that failed was different from the unit used on the Long March 3, which was the rocket that would be used to launch the Apstar 1A. They concluded, therefore, that there should be no cause for concern regarding the Apstar 1A launch.[63]

Nonetheless, representatives of the insurance underwriters stated that insurance on the Apstar 1A launch would be conditioned on delivery of a final report on the root causes of the Long March 3B failure and a review of that report by an independent oversight team.[64]

Paul O'Connor, Vice President of J&H Marsh & McLennan space insurance brokerage firm, later reported to Feith & Zell, a law firm representing Loral on possible export violations, that insurers had paid out almost $500 million in claims involv-

ing prior PRC launch failures, and wanted the PRC to provide full disclosure about the cause of the Intelsat 708 failure.[65]

From April 10 through 12, 1996, China Great Wall Industry Corporation held a meeting in Beijing concerning the Long March 3B failure investigation.[66] Loral sent three engineers to the meeting: Dr. Wah Lim, Vice President and General Manager of Manufacturing; Nick Yen, Integration Manager, Intelsat 708 Program; and Nabeeh Totah, Manager of Structural Systems.[67] Intelsat sent as its representative, Terry Edwards, Manager of Intelsat's Launch Vehicle Program Office. China Great Wall Industry Corporation provided Intelsat and Loral with three volumes of data and eight detailed reports on the current status of the failure investigation. The PRC's Long March 3B Failure Analysis Team presented the failure investigation progress, and the preliminary results up to that date, to Intelsat and Loral.[68]

On or about April 10, 1996, Bansang Lee, Loral's representative in the PRC, on behalf of China Great Wall Industry Corporation, asked Lim to be the Chairman of an independent oversight committee.

On or about April 10, 1996, Lim telephoned Robert Berry, Loral's President, from the PRC. Lim reportedly told Berry that representatives of China Great Wall Industry Corporation had asked him to chair an independent oversight committee reviewing the PRC analysis of the Intelsat 708 launch failure.[69]

Berry says he gave permission for Lim to act as the chairman of the independent oversight committee because of serious safety issues associated with the PRC launch site that had been brought to his attention after the Intelsat 708 failure.[70]

Before leaving Beijing, Lim created a charter for the committee, and he changed its name to the "Independent Review Committee." [71] Eventually, the Independent Review Committee was constituted with the following members and staff:

Membership of the Independent Review Committee[72]

NAME	EMPLOYER	POSITION ON IRC
Wah Lim	Senior VP & GM of Engineering & Manufacturing, Loral	Chairman
John A. Holt	Retired Managing Director, Space Systems Group, British Aerospace	Member
Karl Kachigan	Retired Chief Engineer & Director of ATLAS Launch Vehicle, General Dynamics	Member
Frederick Ormsby	Retired Department Manager, Spacecraft Engineering & Launch Vehicle Program Office, Intelsat	Member
John Smay	Chief Technologist, Hughes	Member
Robert Steinhauer	Chief Scientist, Hughes	Member
Reinhard Hildebrandt	Team Leader, Flight Operations & Post Flight Evaluation, DASA Daimler-Benz Aerospace	Member
Nick Yen	Department Manager, Launch Vehicle & Launch Operations, Loral	Secretary
Nabeeh Totah	Director, Spacecraft Engineering Laboratory, Loral	Technical Staff
Jack Rodden	Principal Engineer, Loral	Technical Staff
Fred Chan	Director, Controls Engineering, Loral	Technical Staff

The Government Security Committee Meeting at Loral

On April 11, 1996, a quarterly Government Security Committee meeting was held at Loral.[73]

The Government Security Committee was established by Loral in cooperation with the Department of Defense in 1991, when 49% of Loral's stock was owned by foreign investors.[74] The express purpose of the Government Security Committee was

to monitor Loral's practices and procedures for protecting classified information and technology controlled under the International Traffic in Arms Regulations.[75]

The meeting attendees recounted to the Select Committee that Loral President Berry arrived at the April 11 Government Security Committee meeting after most of the others had gathered for it.[76] Berry announced at that time that he had just finished with a telephone call from Lim (in the PRC) and had given Lim the authority to chair the Independent Review Committee.[77]

According to Berry, he told the meeting that Lim had advised him that the PRC was interested in Lim chairing the Independent Review Committee. Berry testified that he approved Lim's request to participate during that telephone conversation. Berry testified that he was aware that a report would be prepared and distributed to the PRC and insurance companies. However, he had an understanding with Lim that the report would not contain any technical data or technical assistance.[78] A discussion among the meeting attendees ensued.

The minutes reflect that Dr. Stephen Bryen, an outside member of the Government Security Committee, recommended that "any report prepared as a result of [Loral's] participation in the failure review be submitted to the State Department prior to dissemination to the Chinese." [79]

Bryen testified that he was disturbed by the idea of a failure investigation involving the PRC, and that this would involve technology transfer which required State Department approval. Bryen testified that there was a lot of discussion on the matter, but all agreed that nothing would happen without State Department approval.[80]

Duncan Reynard, Loral's Export Control Manager, recalls that Bryen said:

> *You know, if there's anything written generated by this group of people, you should run it by ODTC [Office of Defense Trade Controls, Department of State] before you release it.*[81]

Reynard says Loral Technology Transfer Control Manager William Schweickert, Loral General Counsel and Vice President Julie Bannerman, and he attended the Government Security Committee meeting. All three agreed with Bryen's

statement. Reynard says that he felt some responsibility in connection with Bryen's comment; however, there was no indication from anyone that a report was going to be prepared. Reynard says that if he had known that a report was going to be prepared, with the intention of disseminating it to foreigners, Loral would have sought the appropriate U.S. Government approval.[82]

Reynard says that neither he, as Export Control Manager, nor Bannerman, the General Counsel, nor Schweickert, the Technology Control Manager, took any proactive measures to follow up on this matter.

Reynard says that "we didn't know what was happening — we didn't — we were waiting for somebody to tell us." [83] According to interview notes of Reynard prepared by an attorney from Loral's outside counsel, Feith & Zell, Reynard said that no one asked him to look into the matter raised by Dr. Bryen.[84]

Loral's General Counsel, Julie Bannerman, testified that no one conducted any research to determine whether the intended activities of the Independent Review Committee were legal, or within Loral's company policy. Bannerman also testified that the primary responsibility for matters relating to Bryen's statements would have rested with Loral's export control office, namely Reynard and Schweickert.[85]

Even though there was a formal mechanism for assigning action items in Government Security Committee meetings, no action item was generated at the April 11 meeting in connection with the Independent Review Committee. No one was assigned to inform Lim of the Government Security Committee's decision that Loral's participation in the Independent Review Committee needed to be approved by the Department of State.[86]

One of the participants at the Government Security Committee meeting was Steve Zurian of Trident Data Systems. Zurian says that Trident has been a security advisor to Loral for nine years and provides export consulting to the company. Trident's responsibilities include attending the Government Security Committee meetings, taking notes, and drafting the minutes. Zurian says that he and Caroline Rodine, another Trident employee, attended the April 11, 1996, and the July 11, 1996, Government Security Committee meetings.

Zurian says that it was the consensus of the attendees at the April 11, 1996, Government Security Committee meeting that Loral should seek and obtain approval from the Department of State before participating in the Independent Review Committee, and that Loral President Berry agreed with the decision.

Zurian says that at the July 11, 1996, Government Security Committee meeting, Berry said that Loral had followed up on Bryen's recommendation to obtain State Department approval to participate in the Independent Review Committee. (As Loral admitted in its June 27, 1996 disclosure to the Department of State, however, this was not the case.)[87]

Zurian's draft of the July 11, 1996, meeting minutes reflects Berry's remarks about obtaining State Department approval. Zurian says that he and Rodine reviewed their notes of the meeting, specifically regarding Berry's remarks, and both agree that the draft minutes are accurate.

Zurian says that it is possible that Loral's management failed to tell Berry that they had not obtained the appropriate State Department approval. He attributes Berry's erroneous understanding to his staff's failure to advise him of the facts.

But numerous Loral personnel, including Berry, Bannerman, and Reynard, were aware of Loral's deliberations with the Department of State regarding the limits on Loral's participation in PRC failure analyses.[88]

On April 3, 1996, for example, Loral proposed to the State Department certain language that restricted Loral's participation in possible failure analyses in connection with two upcoming Long March launches from the PRC, for the Mabuhay and Apstar satellites. Loral's proposal was that it would not comment or ask questions in the course of those failure analyses.[89]

It also should be noted that on or about January 24, 1996, a few weeks prior to the Intelsat 708 failure, Loral received and reviewed the Apstar technical data export license, which stated:

> *Delete any discussion or release under this license of any technical data concerning launch vehicle [rocket] failure analysis or investigation.*[90]

On or about February 22, 1996, a week after the Intelsat 708 failure, Loral received and reviewed the Mabuhay technical data export license that also stated:

> *Delete any discussion or release under this license of any technical data concerning launch vehicle [rocket] failure analysis or investigation.*[91]

The Apstar 1A Insurance Meeting

On April 15 and 16, 1996, a meeting of representatives of companies providing reinsurance for the upcoming Apstar 1A satellite launch took place in Beijing. The Apstar 1A launch, and the issues arising from the Long March 3B rocket failure, were discussed. The launch failure presentations by PRC representatives made substantially the same points as had been made at the March 14, 1996, meeting: that the Long March 3B failure was due to the inertial measurement unit, and that this was not a concern for the Apstar 1A launch because it would be launched by a Long March 3 rocket utilizing a different inertial measurement unit with a previous record of successful launches.[92]

At the same meeting, in response to the requirement that had been stated by the insurance underwriters at the March 14 Beijing meeting, the PRC representatives announced the creation of an independent oversight committee (shortly thereafter named the Independent Review Committee) to review the findings and recommendations of the PRC's failure investigation.[93]

Wah Lim and Nick Yen of Loral, the designated Chairman and Secretary of the Independent Review Committee, were present at the meeting and discussed the role of the committee and its members. The two prospective members from Hughes — John Smay, the company's Chief Technologist, and Robert Steinhauer, its Chief Scientist — were also present, as was Nabeeh Totah of Loral, who would serve as one of four Loral technical staff members to the Independent Review Committee.[94]

During the April 15 and 16 insurers' meeting, the participants were taken on a tour of the Long March rocket assembly area. They were also shown, in a partially opened state, units described by the PRC as the older Long March 3 inertial measurement unit and the newer Long March 3B inertial measurement unit. Thus, almost half of the Independent Review Committee participants had exposure at this time to

the findings and views of the PRC derived from their failure investigation, prior to the first official Independent Review Committee meeting.[95]

On April 17, 1996, Wah Lim sent a letter to all Independent Review Committee members and to China Great Wall Industry Corporation, confirming that the first meeting of the committee would be in Palo Alto, California from April 22 to 24, 1996.

The April 1996 Independent Review Committee Meetings in Palo Alto

Meeting on April 22, 1996

On April 22, 1996, the first Independent Review Committee meeting convened at Loral in Palo Alto. The foreign committee members, John Holt and Reinhard Hildebrandt, were not present. No PRC officials were present, due to a delay caused by visa problems.

Wah Lim called the meeting to order, and the meeting began without a technology transfer briefing.

The matter of a technology transfer briefing was subsequently raised, which prompted Lim to leave the meeting. Approximately ten minutes later, William Schweickert, Loral's Technology Control Manager, arrived and provided a technology export briefing to the Independent Review Committee members who were present. According to one of the participants, it appeared that Schweickert gave a presentation concerning the rules that should be followed at a PRC launch site, rather than a briefing covering technical data exchanges.

Schweickert provided the Independent Review Committee members with a three-page technology export briefing.[96] Schweickert says that he had never prepared a briefing for a failure review before. Thus, he says he used the export licenses for the launch of the Intelsat 708 as a basis for the briefing. (Schweickert says that he learned about the imminent arrival of the PRC visitors only a few days earlier.) However, according to notes of an interview of Schweickert prepared by an attorney from Feith & Zell, Loral's outside attorneys, Schweickert looked at the licenses relating to the Mabuhay and Apstar IIR satellite programs for assistance in preparing the Independent Review Committee briefing. Those licenses were more current than the Intelsat 708 license issued in 1992.

Schweickert stated that these two licenses required the presence of Defense Department monitors during any discussions with the PRC. He said he knew Defense Department monitors would not be present at the Independent Review Committee meeting. As a result, he said, he would have to be "careful" in preparing his export briefing. Schweickert also said that there was not enough time to get a license.

Schweickert told the Independent Review Committee members that Loral did not have a license for the meeting. According to Schweickert, he discussed what he thought the Independent Review Committee could do without a license — such as receive technical information from China Great Wall Industry Corporation, request clarification of certain items, ask questions, and indicate acceptance or rejection of the PRC's conclusions.

Schweickert did not attend any of the Independent Review Committee meetings, other than to give the briefing on the first day.

Duncan Reynard, Loral's Export Control Manager, did not learn of the Independent Review Committee meeting on April 22, 1996 until Schweickert told him that same day. Reynard says that Schweickert told him he had prepared a briefing for the meeting, and he asked Reynard to review it. According to interview notes of Reynard prepared by an attorney from Feith & Zell, Reynard did not see Schweickert's briefing until late in the day on April 22, 1996.[97] Reynard says he reviewed Schweickert's briefing and said it was "okay." [98]

Reynard says he was not surprised to find out that PRC representatives would be visiting Loral. Reynard says he "assumed the briefing and the people that would normally attend something like that were knowledgeable enough to know how to handle that kind of a meeting." [99]

Reynard also says that his understanding of the meeting was that the PRC representatives were going to make a presentation concerning their failure investigation of the Intelsat 708 satellite.[100]

It should be noted that, during this first Independent Review Committee meeting at Loral's offices, Loral's President, Executive Vice President, and Export Control Manager were all absent. They had traveled to Europe in connection with an unrelated business trip, and for vacation.[101]

The Independent Review Committee members who were present spent the first day at Palo Alto reviewing the PRC failure analysis. The documents consisted of approximately 14 reports dealing with technical material, analysis, and failure modes.[102]

Meeting on April 23, 1996

On April 23, 1996, the two foreign members of the Independent Review Committee and the PRC engineers arrived at Loral. The PRC representatives included:

- **Huang Zouyi,** China Great Wall Industry Corporation
- **Professor Chang Yang,** Beijing Control Device Institute
- **Li Dong,** China Academy of Launch Vehicle Technology
- **Shao Chunwu,** China Academy of Launch Vehicle Technology[103]

The majority of this second day was spent trying to understand the PRC failure investigation. Many Independent Review Committee members say there was difficulty in understanding the PRC representatives' presentation because of language problems. As a result, many clarifying questions were asked of the PRC representatives. However, Feith & Zell interview notes of one Independent Review Committee member specifically stated that a "good translator" was present at that meeting.

The PRC officials stated that they believed the failure mode was located in the inertial guidance system of the Long March 3B rocket.[104] Specifically, they believed the failure was caused by a break in a wire to a torque motor controlling the inner gimbal in the inertial measurement unit. While the Independent Review Committee members told the PRC representatives that they did not necessarily disagree with this analysis, the minutes of the Palo Alto meeting reflect that the committee recommended additional investigation by the PRC to verify its failure analysis.[105]

During the meeting, the PRC representatives presented information about the Long March 3B rocket design. The Independent Review Committee members asked questions to better understand the technology used by the PRC, as it was not as advanced as Western designs. Hughes Chief Scientist Robert Steinhauer described the afternoon session as a "tutorial." [106]

Meeting on April 24, 1996

On April 24, 1996, the PRC representatives attempted to answer some of the questions presented by the Independent Review Committee on the previous day. There was also continued discussion of the launch failure analysis, and plans were made to continue the meeting in Beijing on April 30 and May 1, 1996.[107]

The Hughes committee members, Steinhauer and Smay, did not attend the meeting on April 24.[108]

The following is the agenda for the April 24 Palo Alto Independent Review Committee meeting:

9:00 AM	REVIEW OF PROGRESS TO DATE	IRC
9:30 AM	REVIEW OF LM-3/LM-3B DIFFERENCES	CGWIC
10:30 AM	BREAK	
10:45 AM	CONTINUE REVIEW OF LM-3/LM-3B	CGWIC
12:00 PM	LUNCH	
1:00 PM	ACTION ITEMS FOR LM-3/APSTAR 1A	IRC
3:00 PM	BREAK	
3:15 PM	WRAP UP AND PREPARATION FOR BEIJING MEETING	IRC
4:00 PM	OPEN DISCUSSION	ALL
5:00 PM	END	

United States Trade Representative Meeting on April 23, 1996

On April 23, 1996, Nick Yen, Loral's Intelsat 708 Launch Operations Manager and Secretary of the Independent Review Committee, and Rex Hollis, an employee in Loral's Washington, D.C. office, met with various U.S. Government officials at the offices of the U.S. Trade Representative in Washington, D.C.

In a memorandum prepared by Yen dated May 15, 1996, memorializing this April 23, 1996 meeting, Yen described the purpose of the meeting as an informal briefing on the activities leading up to and including the launch failure.[109]

According to Yen's memorandum, the U.S. Government representatives at the meeting were interested in the accuracy of claims by the PRC authorities about the extent of the damage caused to a nearby village by the rocket's explosion. They were also interested in the course of action that was being taken to correct safety problems and deficiencies at the launch site.

According to the memorandum, which was prepared after the State Department inquiries about possible export violations by Loral and three weeks after the meeting, Yen mentioned that an independent review committee headed by Wah Lim had been created.[110]

The memorandum reflected that Yen told the meeting attendees that, since launch site safety related to how the rocket behaves, the Independent Review Committee would review the findings, conclusions, and corrective actions performed by the PRC Failure Investigation Committee, and set the necessary safety implementation requirements for China Great Wall Industry Corporation to consider for its future customers, not just Loral.[111]

Yen did not tell the attendees that Loral did not have a license to participate in the investigation.

The memorandum stated that one of the U.S. Trade Representative officials, Don Eiss, requested a copy of the Independent Review Committee formal report when it became available. According to the memorandum, Yen told Eiss that he would have to consult with Lim prior to the dissemination of the report. There is no indication that the report was ever disseminated to any of these U.S. Government representatives. The memorandum reflected no substantive discussion concerning the Independent Review Committee report.[112]

The meeting was not about export licensing for failure analyses, and no U.S. official at this meeting has been identified as an export licensing officer. Loral, in its Voluntary Disclosure, admitted that:

> *[T]his meeting cannot be taken as U.S. government consent to Loral's activities on the IRC (particularly as the State Department personnel were not from the Office of Defense Trade Controls).*[113]

The April and May 1996 Independent Review Committee Meetings in Beijing

Meeting on April 30, 1996

On April 30, 1996, the second series of Independent Review Committee meetings convened, this time in Beijing. Hughes committee member Robert Steinhauer did not attend this meeting. The committee members stayed at the China World Hotel, and were transported by van from their hotel to the meeting location.

The meeting was held in a large room in a building on the China Great Wall Industry Corporation campus. In attendance were representatives from various PRC aerospace organizations.

According to Independent Review Committee members, various PRC representatives made presentations concerning different aspects of their launch failure investigation.

Many of the committee members say that it was difficult to understand parts of the presentation. In some instances, the presentations were made in Chinese and interpreted for the committee members. Some of the committee members say that, in their opinion, the interpreters did not have technical backgrounds. According to some of the committee members who testified, this lack of technical training contributed to the difficulty in understanding the PRC presentations.

Members' Caucus at the China World Hotel

On the evening of the first day, the Independent Review Committee members and technical staff held a caucus in a meeting room at the China World Hotel. The purpose of the meeting was to discuss the presentations that had been made by the PRC, to consider the possible causes of the launch failure, and to decide on what to present to the PRC participants the following day.

The caucus meeting ran from about 7:00 p.m. to at least 10:00 p.m. No PRC personnel were present. However, according to testimony presented to the Select Committee, the discussion was almost certainly secretly recorded by the PRC.

Topics of discussion included, among others:

- **Proposed failure modes**
- **Redundancy**
- **High fidelity testing**
- **Gimbals**
- **Gyroscopes**
- **Torque motors**
- **Telemetry data**
- **The oscillatory behavior of the flight**

During the caucus, the Independent Review Committee members expressed views that were incorporated in attachment IV of their Preliminary Report. One committee member described the meeting as a "brainstorming" session.

The same member stated, "I'm sure we felt that we had to get together and try to summarize and understand and agree among ourselves what we thought we had heard and seen that day, and that was the whole idea . . . It gave us a chance to talk among ourselves and review what we had heard and perhaps raise questions."

Striking is one Independent Review Committee member's admission that there were probably things said in these supposedly closed meetings of the committee that they would not have said in front of the PRC officials.

According to a document reflecting discussions in the caucus meeting, the Independent Review Committee members were focusing on the following failure modes:

- **Broken wires in general, as postulated by the China Academy of Launch Technology**
- **Frozen follow-up gimbals, a failure mode not considered by the PRC**
- **Open loop in the feed back path**[114]

As early as February 29, 1996, China Great Wall Industry Corporation had identified that there was a problem with the inertial platform.[115] In a March 28, 1996, Information Release from China Great Wall Industry Corporation, the PRC announced that they were one experiment away from completing the simulation experiments on the Long March 3B failure scenarios.[116] The Information Release stated that they had analyzed the telemetry data and the failure mechanism. Through this analysis, they had isolated four inertial platform failure modes:

- **A broken wire to the torque motor for the inner frame**
- **A blocking of the inner frame axis**
- **An open loop of the follow-up frame**
- **Environmental stress**

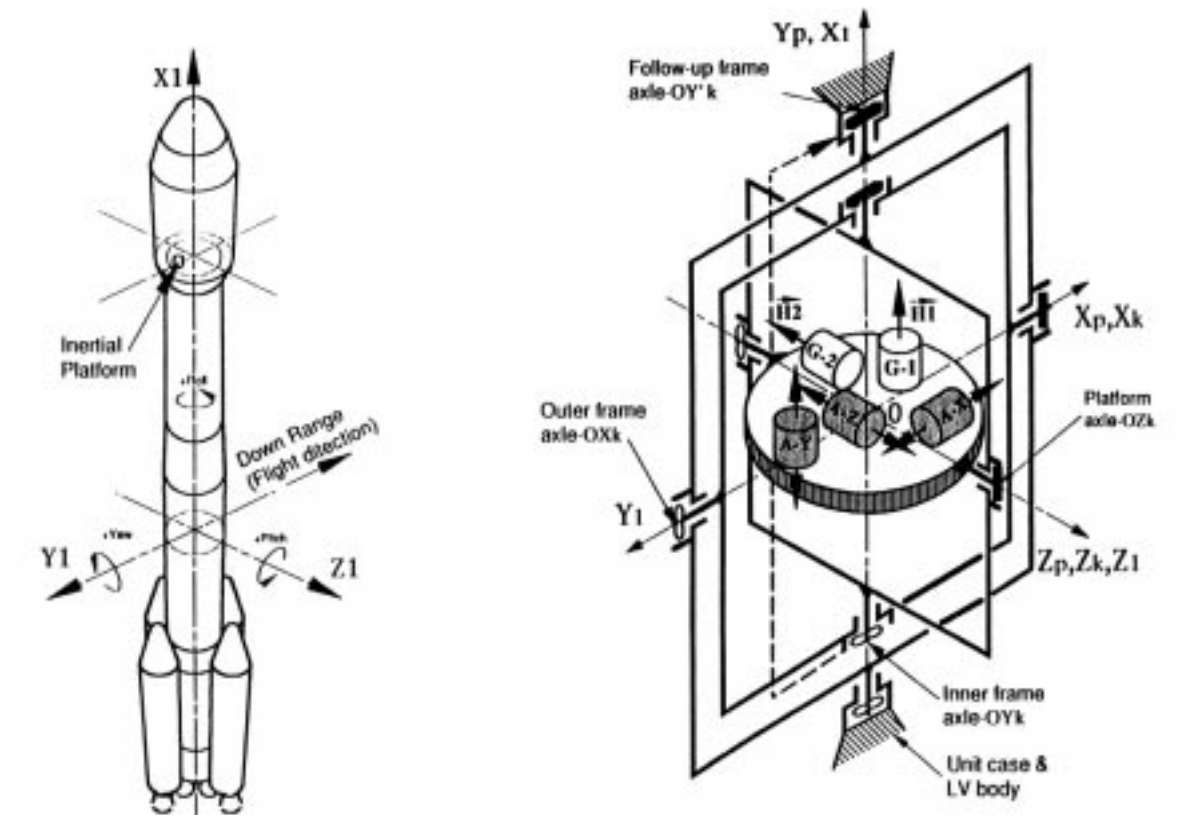

An artist's rendition of the inertial measurement unit (IMU) used on the ill-fated Long March 3B rocket that carried the Intelsat 708 satellite. The IMU is a key component of the rocket's guidance system. Loral and Hughes engineers ultimately traced the cause of the crash to a failure in the IMU.

From its analysis of the telemetry data, China Great Wall Industry Corporation determined that during the 22-second flight of the Long March 3B, there were three distinct cycles, each of which lasted a little over seven seconds. Witnesses at the launch confirmed that the rocket veered three times before impact. China Great Wall Industry Corporation theorized that the rocket veered as the result of a faulty wire (or flawed solder joint) in the inertial platform, which intermittently disconnected and reconnected at the end of each of the three cycles.[117]

By the time of the Beijing insurance meeting on April 15, 1996, China Great Wall Industry Corporation had eliminated two of the four failure modes identified in March. Specifically, they isolated the problem to the inner frame and posed the following possibilities:

- **Electrical circuitry problems:** open loop through the inner frame; broken wire; poor contact; or false welding
- **Mechanical problems:** the axis of inner frame clamping; foreign object blocking[118]

Viewgraphs supplementing their report stated that the inertial platform veered three times during the 22-second flight, and that the first periodic motion occurred in the torque motor on the inner frame axle of the platform.[119] China Great Wall Industry Corporation presented similar information to the Independent Review Committee participants at the first meeting of the committee in Palo Alto from April 22 to 24, 1996.

At the second Independent Review Committee meeting in Beijing, China Great Wall Industry Corporation continued to emphasize the inner frame as the problem. In fact, they provided the Independent Review Committee participants a failure tree that specifically eliminated all but the inner frame as a potential failure mode.[120]

In the words of one Independent Review Committee participant, "I think if they had not had the IRC, they would have sold that one down the line."

The Independent Review Committee was not convinced. First, several committee participants thought the disconnecting and reconnecting wire theory either was not plausible or was "highly unlikely." In addition, China Great Wall

Industry Corporation was only able to replicate the first seven to eight seconds of the flight, rather than the full 22-second flight. Finally, China Great Wall Industry Corporation had not resolved a fundamental question as to why the telemetry data in the follower frame was flat, rather than oscillating.[121]

In a continuing effort to persuade China Great Wall Industry Corporation to explain the behavior of the full 22 seconds of flight, the Independent Review Committee provided comments to the PRC after the first day of the Beijing meeting. The Independent Review Committee stated that "China Academy of Launch Technology should consider to perform a simulation test using an open feed back path as the initial condition. It is also very critical for CALT [China Academy of Launch Technology] to explain why the follow-up gimbal resolve[r] (angle sensor) stayed flat throughout the flight." [122]

While the Independent Review Committee generally acknowledged China Great Wall Industry Corporation's proposed failure modes, they did so only after modification. For example, the PRC proposed a "broken wire to the torque motor for the inner frame," while the Independent Review Committee proposed a "broken wire in general as postulated by CALT." While the PRC proposed a "blocking of the inner frame axis," the Independent Review Committee proposed "frozen follow-up gimbals." [123]

Meeting on May 1, 1996

May 1, 1996, was the second day of the Independent Review Committee Beijing meetings. The following is the agenda for the second day's of that meeting:

8:20	IRC MEMBERS LEAVE HOTEL	CGWIC
9:00	IRC'S REVIEW TO THE ANSWERS	IRC
11:00	DETAILED DISCUSSIONS OF LM-3 AND LM-3B FAILURE ISOLATION ANALYSIS AND IMU FOR LM-3 & LM-3B MANUFACTURING AND TEST PROCEDURE ETC.	ALL
12:00	LUNCH BREAK (BUFFET)	
13:00	TOUR OF THE ASSEMBLY WORKSHOP OF L/V, THE IMU TEST FACILITY	ALL
16:00	WRAP UP SESSION	IRC/CGWIC
17:00	SUMMARY OF FINDINGS TO DATE AND CONCLUSION IF AVAILABLE	IRC
19:00	DINNER	HOSTED BY CASC

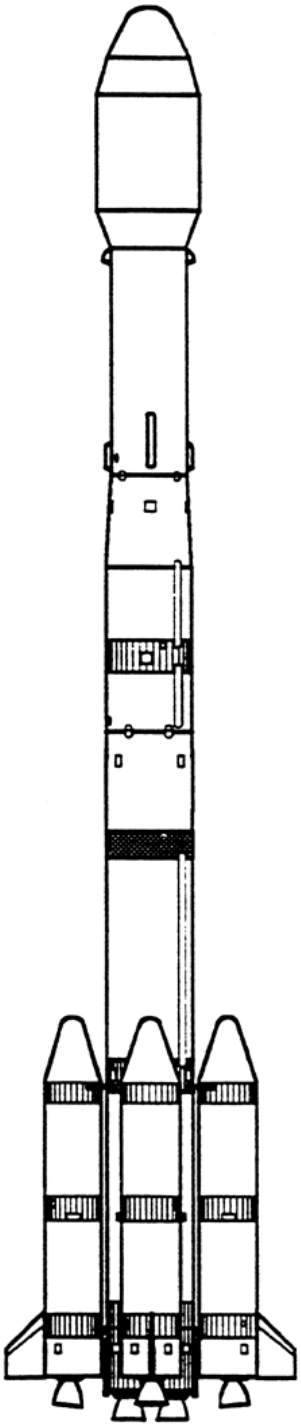

LM-3B

LM-3B: Long March 3B launch vehicle
3-stage launcher for GTO missions.

Lift-off mass:	425,500 kg.	
Lift-off thrust:	5,923 kN.	
Overall length:	54.84 m.	
Diameters:	Stage-1 & Stage-2:	3.35 m.
	Stage-3:	3.00 m.
	Boosters:	2.25 m.
Max. span:	11.45 m.	
Fairing diameter:	4.00 m.	
Static envelope:	3.65 m.	
Fairing length:	9.56 m.	
Adaptor:	1194 mm.	
GTO payload capability:	5,000 kg. Hp=200 km. Ha=35,786 km. i=28.5 deg.	
Launch site:	Sichang Satellite Launch Center (XSLC), Sichuan Province, China	

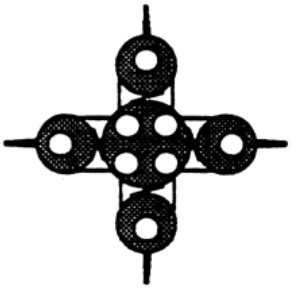

This illustration provides information on the dimensions of the Long March 3B rocket and fairing. It was prepared by the PRC's China Great Wall Industry Corporation as a part of a presentation on the LM-3B launch failure.

During the morning session, a "splinter meeting" was held to specifically discuss the inertial platform. The meeting was attended by the five Independent Review Committee members, and a small group of PRC engineers.[124] During the meeting, the committee participants sought clarifications concerning the signal flow diagrams in order to determine the cause of the open circuit.

During the Independent Review Committee meetings in Beijing, several of the Independent Review Committee members toured the PRC manufacturing and assembly facilities for the Long March 3B inertial measurement unit. During those tours, the Independent Review Committee members commented to the PRC engineers about the quality control practices used by the PRC. These comments on quality control were reiterated in the Independent Review Committee Preliminary Report sent to China Great Wall Industry Corporation on May 10, 1996.[125]

The Independent Review Committee Preliminary Report

Writing the Report

Upon completion of the Beijing Independent Review Committee meeting on May 1, 1996, the process of writing the report began. Wah Lim delegated the task of writing the major portion of the report to John Holt, the British committee participant, because he seemed to have the best understanding of the issues related to the Long March 3B inertial measurement unit.[126]

On or about May 2, 1996, Holt faxed his draft summary to Nick Yen, the Secretary of the Independent Review Committee, at Loral. Yen then disseminated Holt's draft summary to the other Independent Review Committee members. The committee members subsequently provided their comments on Holt's draft to Yen and Lim.[127]

Loral Sends the Draft Report to the PRC

Yen assimilated all of the material into a draft Preliminary Report during the period May 2 to 6, 1996. He completed the draft Preliminary Report around May 6 or 7, 1996. Yen then showed the report to Loral's Wah Lim, the Chairman of the Independent Review Committee. Lim suggested changes, and told Yen to send it to the Independent Review Committee members, and to the China Great Wall Industry Corporation.

On May 7, 1996, Yen distributed the draft Preliminary Report to the Independent Review Committee members and technical staff for additional comments.[128]

On the same day, Yen also faxed a copy of the draft to China Great Wall Industry Corporation in the PRC.[129]

According to interview notes of Lim taken by a Feith & Zell attorney, Lim acknowledged that he instructed Yen to send the draft Independent Review Committee report to everyone, including the PRC, on May 7, 1996.[130]

It should be noted that Lim refused to be interviewed or deposed during this investigation.

The Contents of the Draft Report

The Independent Review Committee's Preliminary Report repeated the committee's concerns that China Great Wall Industry Corporation's conclusions were debatable. As a short-term recommendation, the Independent Review Committee stated:

> *An explanation of the total flight behavior is essential to fully confirm the failure mode.*[131] *A mathematical numerical solution is recommended immediately, to be followed by a hardware in the loop simulation test when possible . . .*[132]

In addition, the draft Preliminary Report documented the Independent Review Committee's view that an intermittently reconnecting wire — the PRC's theory — was not necessary for the rocket to behave in the manner in which it did.

Specifically, the Independent Review Committee postulated that a single disconnection–without reconnection–would be "a much simpler, and more plausible, explanation." [133]

The Independent Review Committee repeated its concern that "the open circuit could be at various other physical locations," suggesting that the problem might not be in the inner frame,[134] as was posited by the PRC.

The Independent Review Committee participants questioned China Great Wall Industry Corporation's assertions that the flat data from the follower frame were bad data.[135] They therefore requested that China Great Wall Industry Corporation confirm that the follower frame had functioned properly during flight.

Ten days after China Great Wall Industry Corporation received the Independent Review Committee's Preliminary Report, it abandoned testing of the inner frame, and started vigorously testing the follower frame.

One month later, China Great Wall Industry Corporation determined that the cause of the failure was an open feed back path in the follower frame. This finding was confirmed in a presentation by China Great Wall Industry Corporation to Loral, Hughes, and others in October 1996.

In addition to these observations, the Independent Review Committee document recommended that a "splinter" meeting be held the following day to examine more closely the failure modes related to the inertial guidance system of the Long March 3B.[136] John Holt, John Smay, Jack Rodden, Fred Chan, and Nick Yen were selected to participate in the meeting.[137]

Notification to Loral Officials That a Report Had Been Prepared

On or about May 6, 1996, Lim spoke during a Loral staff meeting about the work of the Independent Review Committee, and mentioned that a report was going to be submitted to the insurance companies on or about May 10, 1996.

Julie Bannerman, Loral's General Counsel, says that she was concerned about the possibility that the company might incur some liability to the insurance companies because Loral employees would be associated with representations that were made in the report. Bannerman advises that, for this reason, she wanted to add a disclaimer to the report.[138]

Thus, Bannerman believes that she asked Lim to provide her a copy of the report prior to its dissemination, although she has no specific recollection of making the request.[139]

Bannerman says she does not recall any mention at the Loral staff meeting that the report was being provided to the PRC.[140]

Loral Review and Analysis of the Independent Review Committee Report

Loral General Counsel Julie Bannerman says that she found a copy of the Independent Review Committee draft Preliminary Report on her desk on May 9, 1996. She does not know who put the document on her desk, but believes that it was probably Wah Lim.[141]

Bannerman says that she looked at the report and realized that it contained technical information she did not understand. As a result of the concern this caused her from an export control perspective, she says she began preparing a memorandum to send to Loral's outside legal counsel, Feith & Zell in Washington, D.C., for review.[142]

During the preparation of her memorandum, Bannerman says that she telephoned Loral Export Control Manager William Schweickert because she wanted to mention his April 22, 1996, export briefing in the memorandum. Schweickert provided her with the requested information, which she included in approximately one line in the memorandum, but she does not recall whether she advised Schweickert that a draft report had been prepared by the Independent Review Committee.[143]

Bannerman says that she faxed her memorandum and the draft Preliminary Report to Mark Feldman, an attorney at Feith & Zell. She did not call Feldman prior to transmitting the document.[144]

Bannerman says that she was concerned that the draft Preliminary Report might include technical data or defense services that required an export license (which Loral did not have), or that it represented activities that might require a license. However, she says she could not make that judgment. She did not consider it necessary at this point in time to call Lim because "the issue at hand was present in the document." Bannerman advises that she did not speak with Lim on May 9, 1996.[145]

Bannerman recalls believing that, since the draft Preliminary Report was in her possession, it would not be disseminated outside Loral. Bannerman says that, at this point — May 9, 1996 — she was not aware that the draft Preliminary Report had been disseminated to anyone.[146]

The Final Preliminary Report is Sent to the PRC

Loral's General Counsel, Julie Bannerman, says that on May 10, 1996, Loral Export Control Officer Duncan Reynard returned from vacation and came to her office. Bannerman showed him the Independent Review Committee report, since she wanted his advice on how to handle the document.[147]

Bannerman says that Reynard's immediate comments concerned the quality of the report, not necessarily its substance. Bannerman says that she and Reynard called Mark Feldman at Loral's outside counsel, Feith & Zell, to see if he had yet reviewed the report. According to Bannerman, Feldman said that he had reviewed it, was concerned about the structure and apparent purpose of the document, and thought that some issues required resolution.[148]

Bannerman says she believed the report would not be sent outside Loral until she and Reynard had more information.[149]

Bannerman says that she and Reynard advised Loral President Berry of the situation, and he concurred in their recommendation not to allow dissemination of the report.[150]

Bannerman says that her recollection is uncertain on this point, but she believes that Reynard was responsible for preventing any dissemination of the draft Preliminary Report, and was going to talk to Wah Lim about that. Bannerman also believes that she may have called Lim and told him not to disseminate the report. She says that her recollections of the remainder of that day are vague, but that she recalls going home with the understanding that the "mission had been accomplished." [151]

Reynard says his recollection is that Bannerman was going to speak to Lim, and he was going to speak with Yen. Reynard says that, after the meeting with Bannerman, he went to Yen's office at approximately 11:30 a.m. that same day, May 10, where he saw a number of reports on Yen's table. Reynard says that Yen confirmed that the documents were copies of the draft Preliminary Report. Reynard says that Yen told him that he was preparing the reports for dissemination to the Independent Review Committee members.[152]

Reynard says he told Yen that the reports could not go out until Loral had State Department approval, or a license, and that Yen said he understood this. Reynard said he did not ask Yen whether the reports had been sent out, because they were on Yen's desk. Reynard says he took some copies of the report, so that he could show them to U.S. Government officials.[153]

Yen finished the final Preliminary Report on May 10, 1996. He took it, and a cover letter addressed to China Great Wall Industry Corporation, to Lim for his review. Lim looked at the report quickly and signed the cover letter.

Yen faxed the report to China Great Wall Industry Corporation in the PRC shortly afterward that same day.

Later that day, Lim asked Yen if the report had been sent to the China Great Wall Industry Corporation. When Yen replied that it had, Lim indicated that Loral might have to apply for a license for the Independent Review Committee activity.

Another Copy of the Report Is Sent to Beijing

On May 13, 1996, Lim's office instructed Yen to send the report to Paul O'Connor at J&H Marsh & McLennan in Washington, D.C. After receiving the report in its Washington office, J&H Marsh & McLennan requested the report be faxed to O'Connor in Beijing. Apparently Lim specifically approved faxing the report to O'Connor in Beijing.

Lim's May 13, 1996, letter transmitting the final Independent Review Committee Preliminary Report to O'Connor says, in part:

> *This [Report] will not be delivered to CGWIC [China Great Wall Industry Corporation] and its launch service agencies until the export license or an equivalent authorization is obtained.*" [154]

This letter is inconsistent with Yen's having already transmitted the draft Report to China Great Wall Industry Corporation six days earlier, on May 7. It is also inconsistent with Lim's letter three days earlier, on May 10, transmitting the final Independent Review Committee Preliminary Report to China Great Wall Industry Corporation, which was faxed to the PRC on that date by Yen.

It should be noted that Wah Lim refused to be interviewed in this investigation, despite the issuance of a subpoena.[155] Moreover, the Department of Justice has requested that further details of this aspect of the Select Committee's investigation not be publicly disclosed because it would compromise the criminal prosecution of Loral, Hughes, and their employees. Since the details can be made public as part of such a prosecution, the Select Committee has agreed to this request.

Loral Management Actions After Delivery of the Report to the PRC

Loral General Counsel Bannerman recalls a meeting in Loral President Berry's office, possibly on May 14, 1996, concerning the Independent Review Committee matter.

Bannerman believes that Loral's Executive Vice President, Pat Dewitt, may have called the meeting to discuss a May 14, 1996, memorandum prepared by Loral Export Control Manager Reynard. The memorandum raised concerns about possible violations of the International Traffic in Arms Regulations on the part of Loral.[156]

Loral President Berry and Weh Lim, the Chairman of the Independent Review Committee, were also present at the meeting.

During the meeting, Bannerman says Dewitt was concerned about whether or not the Preliminary Report had been disseminated. She says he asked Lim to confirm that it had not.[157]

Bannerman says Lim made a telephone call at that point in the meeting, but she does not know to whom. Bannerman does not recall that Lim actually confirmed at this meeting that the Preliminary Report had not been sent. However, she says the meeting participants "received the message" that Lim had stopped the report from being disseminated.[158]

Bannerman believes a meeting was set up for the following day, May 15, 1996, in order to receive a telephone report from Reynard, who was in Washington meeting with U.S. Government representatives concerning the report.[159]

Reynard says he recalls the meeting on May 14, 1996, in Berry's office, during which he gave copies of a memorandum he prepared to Bannerman, Berry, and Dewitt.[160]

Reynard says the purpose of the memorandum was to get people's attention on the Independent Review Committee report and necessary action. He says the bold print in the memorandum indicated that he was strongly trying to get people's attention. The final page of the memorandum contained recommended courses of action.[161]

One of the memorandum topics concerned an article that appeared in *Space News*. The article reported that the Independent Review Committee's report had been released to the PRC on May 10, 1996. Reynard says that he considered the article to be inaccurate because, to the best of his knowledge, the report had not been released.[162]

Another topic of the memorandum concerned possible violations of the International Traffic in Arms Regulations, but Reynard does not think there was any "real" discussion of that specific concern at the meeting.[163]

Reynard says that at this point he did not know the report had been disseminated to the PRC. Reynard says the meeting did not last long, and that Berry told him at the meeting to go to Washington and to do whatever was necessary regarding the Independent Review Committee's report.[164]

On May 14, 1996, Yen received a call from Lim requesting that Yen be present at a meeting on May 15, 1996, in Berry's office. The purpose of the meeting was to have a telephone conference with Reynard, who was in Washington meeting with State Department and Defense Technology Security Administration officials regarding the Independent Review Committee activity.

Defense Department Official Discovers the Activities Of the Independent Review Committee

After reading an article in *Space News* that described Loral's involvement in a launch failure investigation, Defense Technology Security Administration official Robert Kovac called Loral's Washington Representative, Harold Bradshaw, on or about May 14, 1996. Kovac inquired about the license that Loral relied upon to con-

duct the investigation. When Bradshaw could not provide an answer to Kovac's question, a meeting was scheduled for May 15, 1996.[165]

Meeting with the Defense Technology Security Administration

On May 15, 1996, Loral's Reynard and Bradshaw met with Kovac and two other officials of the Defense Department's Defense Technology Security Administration. Later that day, Reynard and Bradshaw met with representatives of the State Department's Office of Defense Trade Controls.

At the meeting with the Defense Department officials, the Defense Technology Security Administration reviewed the Preliminary Report and expressed concerns about the technical data it contained.

The Defense Technology Security Administration participants were shocked that the Preliminary Report contained references to technical discussions with the PRC concerning inertial navigation systems. Kovac told the Loral representatives that, in his opinion, Loral had potentially violated the law and was in the process of violating it "big time" by providing the report to the PRC.

Kovac specifically asked Reynard whether the document had been provided to the PRC. Reynard replied that it had not. But it had, he said, been disseminated to the Independent Review Committee members.

Kovac specifically advised that Loral should submit a voluntary disclosure to the State Department.

Kovac had follow-up conversations with Bradshaw, but no other conversations with Reynard.

In Kovac's opinion, the State Department DSP-5 license, No. 544593, issued to Loral for the export of technical data in support of technical discussions for the launch of an Intelsat VIIA satellite, did not allow Loral to provide any technical assistance to the PRC.

Meeting with the State Department

On May 15, 1996, following their meeting with the Defense Technology Security Administration. Loral's Reynard and Bradshaw met with Dr. Kenneth Peoples, the State Department licensing officer for the Intelsat 708 satellite launch.

Bradshaw had asked for a meeting at the State Department's Office of Defense Trade Controls to discuss Loral's involvement in a failure analysis with the PRC.

Based on Loral's presentation about the launch failure investigation of the Intelsat 708 satellite, Peoples believed there was a serious possibility the International Traffic in Arms Regulations had been violated.

Peoples recommended that Loral provide a letter to William Lowell, Director of the State Department's Office of Defense Trade Controls, concerning the matter. Loral subsequently delivered a box of documents relating to this matter to the State Department.

Reynard's Telephone Call to Loral

On May 15, 1996, Loral officers Bannerman, Berry, Yen, and Dewitt — but not Lim — were present in a meeting room at the company to receive a telephone call from Loral's Export Control Officer, Duncan Reynard, who was in Washington. Bannerman recalls that Reynard called and briefed them on his meeting with U.S. Government officials.[166]

Bannerman's recollection is that the meeting was related to the Independent Review Committee. However, she does not recall whether the meeting was convened to initiate discussions about instituting a Loral investigation of the Independent Review Committee matter, or whether the purpose was to just to speak with Reynard.

Bannerman says that they (Loral) got the message that all Independent Review Committee activity should be ceased.[167]

Bannerman says she has no recollection of any discussion during this meeting about whether the Independent Review Committee report had been sent to the PRC. Bannerman's recollection is that it was decided that Loral would initiate an investigation into the matter upon Reynard's return from Washington.[168]

Bannerman says the message received from Reynard during this meeting was that Loral was not only to stop all Independent Review Committee activity, but also to retrieve all copies of the documents that had been disseminated. Bannerman says she cannot recall Reynard making any comments about whether the Independent Review Committee report had been disseminated to the PRC.[169]

Bannerman says that Yen was present for Reynard's telephone call, and that Yen did not say that he had disseminated the Independent Review Committee report to the PRC.[170]

Others present also recall that Reynard said that the Independent Review Committee was not a good idea, and that Loral should prepare a voluntary disclosure.

After the telephone conference with Reynard ended, Lim asked Yen to retrieve the Independent Review Committee reports that had been distributed to the foreign committee members. But Lim did not ask Yen to retrieve the copies that had been sent to the other Independent Review Committee members, or to China Great Wall Industry Corporation.

Bannerman says she has no specific recollection of meeting with Reynard upon his return from Washington. However, she believes she probably did, and that Reynard initiated a preliminary investigation into the matter.[171]

Loral Management Discovers the Independent Review Committee Report Has Been Sent to the PRC

Bannerman says that Reynard told her on May 20, 1996, that Yen had admitted earlier that day he had disseminated the report to the PRC.[172]

Reynard advises that he confronted Yen in a small office at Loral, and asked him directly whether he had disseminated the report. Yen admitted, says Reynard, that he had transmitted the report to the PRC on May 10, 1996.[173]

Reynard says he did not ask Yen why Yen had not told anyone at Loral previously that he had disseminated the document to the PRC.

After receiving the information that the report had been sent to the PRC, Bannerman believes she advised Pat Dewitt, Loral's Chief Financial Officer, about the situation. She says she does not remember whether they told Berry about the matter at this time.[174]

Bannerman recalls making a decision that she wanted outside counsel to conduct an investigation, and that she did not interview Lim or Yen about the matter because outside counsel was going to investigate. Bannerman says she believed that the matter required delicate handling.[175]

Loral's 'Voluntary' Disclosure

Investigation by Loral's Outside Counsel

From May 29 through 31, 1996, an attorney from Loral's outside counsel for export matters, Feith & Zell, visited Loral's facility in Palo Alto and interviewed almost all of the Loral personnel referred to by name in the disclosure. Two Feith & Zell attorneys returned to Palo Alto from June 4 through 6, 1996, to hold follow-up interviews and review additional documents. Feith & Zell eventually completed the investigation and prepared a disclosure that was submitted on June 17, 1996, to the State Department.[176]

Loral Submits Its 'Voluntary' Disclosure to the State Department

The disclosure by Loral chronicles the company's version of the involvement of Loral personnel in the Intelsat 708 launch failure investigation. It analyzes the Independent Review Committee meetings held in both Palo Alto and Beijing, as well as the preparation and dissemination of the Preliminary Report.[177]

This submission was in response to a May 29, 1996 letter from William Lowell of the State Department, advising Eric Zahler, General Counsel of Loral Space and Communication, Loral's parent corporation, that there was reason to believe that Loral may have participated in serious violations of the International Traffic in Arms Regulations by providing unauthorized defense services to the PRC in connection with the February 1996 launch failure investigation.[178]

Lowell recommended that Loral:

- **Take immediate steps to cease all related activity that may require approval**
- **Provide a full disclosure**
- **Enumerate all releases that were controlled under the International Traffic in Arms Regulations**[179]

The following outlines the substance of Loral's Voluntary Disclosure and its appendices and exhibits.

Outline of Loral 'Voluntary' Disclosure

Summary — Nature and Extent of Issues	Loral's disclosure claims that the Independent Review Committee's activity raises three questions: (1) Did Loral furnish China Great Wall Industry Corporation with "technical data"; (2) did Loral furnish China Great Wall Industry Corporation with a "defense service"; (3) did Loral furnish non-U.S. members of the Independent Review Committee with "technical data"
Identities and Addresses of Individuals and Organizations	List of all persons and organizations involved in the Independent Review Committee matter (Appendix B)
Export License Numbers	Licenses for the Intelsat VIIA satellite program. There is no Technical Assistance Agreement authorizing Independent Review Committee activity.
Munitions List Items	Loral's disclosure that a central issue is whether the Independent Review Committee activities constituted a "defense service" in connection with a rocket.
Facts and Circumstances	An outline is presented of Loral's involvement in the Independent Review Committee activities.
Summary of Key Mistakes	Loral acknowledges it was a serious mistake to not seek prior State Department approval. Loral notes that Government Security Committee instructions regarding the need to seek advance State Department approval were not followed. Loral acknowledges that the export control briefing at first Independent Review Committee meeting was deficient, and that the Preliminary Report was sent to China Great Wall Industry Corporation without any review by Loral export control staff.
Corrective Actions	The thrust of corrective measures propsed is: (a) improve export control training of all Loral staff who engage in or authorize communications with foreign persons (b) tighten procedures to ensure communication and follow-up between Loral export control staff and program staff (c) reinvigorate corporate policy on the priority of export control law compliance
Mitigating Factors	Loral claims as mitigating factors, if the State Department should find that Loral violated export regulations, that the Government Security Committee functioned well. Any wrongdoing, Loral claims, was unintentional; they had no intent to provide technical assistance to China Great Wall Industry Corporation; there was minimal harm to U.S. interests; Loral takes compliance seriously; and they are taking corrective measures.
Conclusions	Loral acknowledges that several deficiencies had been revealed in Loral's export control procedures. Loral claims its staff acted in good faith. Loral asserts the harm to U.S. interests appears to have been minimal.

Supporting Material with Loral 'Voluntary' Disclosure

Appendix A	Certification by Loral President, Robert Berry.
Appendix B	List of all persons and organizations involved in the Independent Review Committee matter.
Green Binder	Copies of all materials furnished by the Independent Review Committee members to China Great Wall Industry Corporation.
Blue Binder (3 volumes)	Copies of all materials furnished to the Independent Review Committee by China Great Wall Industry Corporation.
Yellow Binder	Miscellaneous materials.
Red Binder	Loral export procedures and training materials.

Loral's disclosure to the State Department was silent as to why Yen disseminated a draft copy of the Independent Review Committee Preliminary Report to China Great Wall Industry Corporation on May 7, 1996.

Also, no reason was provided as to why Yen disseminated the final version of the Independent Review Committee Preliminary Report to China Great Wall Industry Corporation on May 10, 1996.

In addition, Loral's disclosure failed to identify — among other issues — the following facts:

- **During the time in which the Independent Review Committee was formed** and conducted its activities, Loral did not adequately staff its export control function.[180]
- **In January 1995, Loral assigned responsibility** for drafting its "Export Control Operating Procedures" by January 25, 1996. As of July 1996, those procedures had not been drafted.[181]
- **Even though the issue of Loral's participation in the Independent Review Committee was discussed** at the April 11, 1996 Government Security Committee meeting, no one communicated the substance of that discussion to any of the participants in, or to the Chairman of, the Independent Review Committee.

- **No one, other than the participants in the Independent Review Committee,** ascertained the type and extent of the Independent Review Committee's failure review activities.[182]
- **No one conducted any research to determine whether the intended activities of the Independent Review Committee were legal** or consistent with Loral's company policy.[183]
- **Adequate notice was not given** regarding the impending visit of PRC engineers to Loral's facility in Palo Alto.[184]
- **Loral failed to adequately review the export control briefing** to be delivered to the Independent Review Committee, even though the drafter of that briefing had never prepared an export control briefing in connection with a failure review.[185]
- **No one ensured that the delivery of that briefing** to the participants of the Independent Review Committee was adequate.[186]
- **At the time of the first Independent Review Committee meeting in Palo Alto, Loral's President, Executive Vice President, and Export Control Manager** traveled to Europe in connection with an unrelated business trip and vacation.[187]
- **No one monitored the Independent Review Committee's failure review activities in the PRC.**[188]
- **Once it was determined that a report had been drafted, no one effectively communicated to the responsible Loral employees** that the report should not be transmitted to the PRC prior to review by Loral's General Counsel or the U.S. Government.[189]
- **Officers at Loral's parent, Loral Space and Communications, Ltd., were not involved in oversight** of

Loral's participation in the Independent Review Committee and acknowledge that they were distracted by other business matters, primarily the sale of Loral's defense assets to Lockheed-Martin.[190]

- **No one was reprimanded, subjected to the company's administrative action, or fired** in connection with the matter.[191]

The 'voluntary' disclosure failed to disclose the following indications that Loral employees were generally aware of the export restrictions related to failure reviews:

- **Nick Yen, the Independent Review Committee Secretary, was aware of the export control hazards** that attended failure reviews, as evidenced by the fact that he had reported his concerns regarding Hughes' participation in the 1995 Apstar failure review.[192]

- **The technical data license for the Intelsat 708 stated: "The contractor must not provide any technical assistance whatsoever** to its Chinese counterparts which might assist China to design, develop, or enhance the performance of any of its contemplated or existing space launch missiles or facilities." [193]

- **Numerous Loral personnel, including the Executive Vice President, General Counsel, Export Control Manager, and Yen, were aware of, or participated in, contemporaneous discussions with the State Department regarding the permissible bounds** of Loral participation in PRC failure analyses. These discussions were embodied in an April 3, 1996 Loral proposal to the State Department of license language that would restrict Loral's participation in possible failure analyses in connection with the upcoming Mabuhay and Apstar Long March launches. Loral's proposal was that it would not comment or ask questions in the course of any such failure analyses.[194]

- **On or about January 24, 1996, a few weeks prior to the Intelsat 708 failure, Loral received and reviewed the Apstar technical data export license** issued to Loral by the U.S. Government. The license barred Loral from passing any technical data to the PRC in connection with a failure investigation. The license stated: "[D]elete any discussion or release under this license of any technical data concerning launch vehicle [i.e., rocket] failure analysis or investigation." [195] This came to Loral senior management's attention shortly after the license was received.

- **On or about February 22, 1996, a week after the Intelsat 708 failure, Loral received and reviewed the Mabuhay technical data export license** issued to Loral by the U.S. Government. The license barred Loral from passing any technical data to the PRC in connection with a failure investigation. The license stated: "[D]elete any discussion or release under this license of any technical data concerning launch vehicle [i.e., rocket] failure analysis or investigation." [196] This came to Loral senior management's attention when the license was received.

The Loral disclosure acknowledged that it was a serious mistake not to have sought State Department approval for the Independent Review Committee activities. The disclosure did not admit to any violations of the International Traffic in Arms Regulations, although it recognized that the issue of assistance to China Great Wall Industry Corporation raised problems under these regulations. The disclosure advised that Loral's policy was to seek State Department approval before proceeding with activities such as the Independent Review Committee.[197]

The disclosure stated that Loral was taking a series of corrective actions to ensure that similar mistakes do not happen again. The thrust of those measures was to:[198]

- **Improve export control training** of all staff who engage in or authorize communications with foreign persons.

- **Tighten procedures to ensure communication and follow-up** between export control staff and program staff.
- **Reinvigorate the corporate policy that compliance with export control laws** and regulations takes priority over business concerns.

The PRC Gives Its Final Failure Investigation Report

On October 21 and 22, 1996, China Great Wall Industry Corporation made its final launch failure presentation to officials at Loral.[199] The meeting was sponsored by Loral's Mabuhay Program, which subsequently launched the Mabuhay satellite on the Long March 3B rocket on August 19, 1997.

On September 10, 1996, China Great Wall Industry Corporation had announced its final failure determination: that the cause of the February 11, 1996 Long March 3B crash was the absence of current output from the servo-loop of the follow-up frame of the inertial guidance platform.[200]

It should be noted that the follow-up frame failure mode had been rejected by China Great Wall Industry Corporation during the Beijing Independent Review Committee meetings.[201] Yet, even though this mode had been rejected by China Great Wall Industry Corporation during the Beijing meetings, the Independent Review Committee included it in its final Preliminary Report as a possible failure mode.[202]

During the October 21 and 22, 1996 Long March 3B failure review presentation at Loral, China Great Wall Industry Corporation produced documents that showed it had started testing for the follow-up frame failure mode on or about May 20, 1996 — slightly more than two weeks after the conclusion of the Beijing Independent Review Committee meetings, and ten days after receiving the Independent Review Committee's Preliminary Report.[203]

China Great Wall Industry Corporation finished testing the follow-up frame failure mode on or about June 20, 1996.

Assessments by U.S. Government Agencies And Referral to the Department of Justice

Loral and Hughes each submitted information to the State Department in their disclosures regarding the Independent Review Committee. The State Department reviewed this material, and generated an assessment of the information contained in the documents that were submitted.

The State Department also asked the Department of Defense and CIA to review the materials and generate their own assessments.

The Defense Department conducted two analyses: one in August 1996, and another — by the Defense Technology Security Administration — in May 1997.

The Central Intelligence Agency provided views to the State Department in June 1996, but limited its analysis to proliferation concerns. In addition, in 1998 an interagency review team was asked to address a subset of questions that remained after the earlier assessments.

Defense Department 1996 Assessment

In August 1996, the Department of Defense prepared a classified assessment of the Independent Review Committee materials. That assessment reported that the Defense Department would have recommended against issuing a license for the sharing of technical information with the PRC by Loral and Hughes. It concluded that there existed the potential for moderate harm to national security interests.

The assessment cited 18 violations that it believed had occurred during the Independent Review Committee's exchanges of information with the PRC. These examples were taken from the minutes of the second Independent Review Committee meeting, and from the draft and final versions of the Preliminary Report.

In conclusion, the Department of Defense assessment stated:

> *It is likely that the all-Chinese Failure Analysis Team [PRC] pursued recommendations made by Independent Review Committee in its draft report . . . and that the pursuit of these recommendations directly resulted in the Chinese team finding the correct cause of failure in the Long March 3B guidance system . . .*

Evidence suggests that the Independent Review Committee very likely led the Chinese to discover the true failure of the Long March 3B guidance platform.[204]

Central Intelligence Agency Assessment

On June 17, 1996, the Central Intelligence Agency reported to the State Department that the Independent Review Committee report did not disclose any significant missile-related technology or know-how to the PRC's ballistic missile program. The Central Intelligence Agency judged that the Independent Review Committee's actions posed no proliferation concerns. The Central Intelligence Agency assessment was based on a review of the Independent Review Committee's preliminary report that State had received from Loral and focused only on proliferation concerns related to the PRC's ballistic missiles.

Department of State Assessment

On March 25, 1997, the State Department, after considering the views of the other agencies, reported its assessment of the Independent Review Committee's materials. That report stated: "[State] believes information passed to China . . . could significantly improve the manufacturing, production, reliability, and maintainability" of the Long March 3B guidance system.

Defense Technology Security Administration 1997 Assessment

The Defense Department's Defense Technology Security Administration issued a classified assessment of the Independent Review Committee activities on May 16, 1997. That report stated:

Loral and Hughes committed a serious export control violation by virtue of having performed a defense service without a license in the course of conducting an investigation for China of the failure of the February 1996 launch of the Long March 3B.

This activity also violated the U.S.-China Space Launch Technology Safeguards Agreement.

The defense service consisted of a full range of investigatory, engineering and corrective analyses to assist the Chinese in identifying the root cause of the failure and corrective measures.

> *The significant benefits derived by China from these activities are likely to lead to improvements in the overall reliability of their launch vehicles [i.e., rockets] and ballistic missiles and in particular their guidance systems.*[205]

Based on its assessment, the Defense Technology Security Administration recommended that the matter be referred to the U. S. Department of Justice for possible criminal investigation.

Interagency Review Team Assessment

In 1998 an interagency review team was asked to respond to questions regarding the Long March 3B and its guidance system. At the conclusion of the Select Committee's investigation, the interagency review team's conclusions remained in draft form. However, members of the team briefed the Select Committee staff and provided documents requested by the Select Committee.

The technical issue of greatest concern to the interagency review team was that the Independent Review Committee exposed the PRC to Western diagnostic processes. In addition, the Independent Review Committee provided the PRC with alternative possible causes of the failure that the PRC had apparently not previously considered in their investigation.

The interagency review team also found that the Independent Review Committee outlined for the PRC the general approach to isolating the true failure mode. This may have been of significant help to the PRC, and may have led it to discover the true failure mode more quickly. This could have prevented a failure in one or more subsequent rocket flights involving the same guidance system. (The Long March 3A, 3B, and 3C rockets all use the same guidance system.)[206]

More important still, the team members believed, was the exposure to the diagnostic test process outlined by Loral and Hughes that could improve PRC pre-flight and post flight failure analysis for their ballistic missile programs. This, in turn, could increase future ballistic missile reliability.[207]

Outline of What Was Transferred to the PRC

During their engagement, the Independent Review Committee members communicated with the PRC in several ways:

- **In-person conversations**
- **In-person briefing presentations**
- **Written questions and answers**
- **Provision of other written materials:**
  - **Briefing charts**
  - **Meeting minutes**
  - **Agendas**
  - **Independent Review Committee charter and membership**
  - **Independent Review Committee Preliminary Report**[208]

The written records of these communications have been scrutinized by the several U.S. Government agencies that generated assessments of the Independent Review Committee's activities.

Independent Review Committee Meeting Minutes

The minutes for the Independent Review Committee meetings in Palo Alto and in Beijing contained questions, answers, action items, Independent Review Committee comments, agendas for the next meeting, and an Independent Review Committee preliminary assessment.[209] They were transmitted to China Great Wall Industry Corporation as follows:[210]

- **On April 25, 1996,** Yen faxed the minutes of the Independent Review Committee meeting in Palo Alto, California, to China Great Wall Industry Corporation.[211]

- **On May 6, 1996,** Yen faxed the minutes of the Independent Review Committee meetings in Beijing to China Great Wall Industry Corporation.[212]

Independent Review Committee Preliminary Report

The Independent Review Committee Preliminary Report, and a draft version, were transmitted to the PRC in May 1996, as follows:

- **On May 7, 1996,** Yen faxed a draft of the Preliminary Report to China Great Wall Industry Corporation, as well as to the Independent Review Committee members.[213]
- **On May 10, 1996,** Yen faxed the final version of the Preliminary Report, less attachments, to China Great Wall Industry Corporation. He shipped complete copies to all Independent Review Committee members via express-mail.[214]
- **On May 13, 1996,** Yen faxed the final Independent Review Committee Preliminary Report to a hotel in Beijing for Paul O'Connor of the J&H Marsh & McLennan insurance brokerage firm.[215]

Loral's Inaccurate Instructions on Releasing Public Domain Information to Foreigners

During a brief presentation at the first Independent Review Committee meeting in Palo Alto, the Loral Technology Transfer Control Manager gave instructions to the committee members regarding the dissemination of public domain information to the PRC.[216] Statements from State Department officials indicate that the Loral instructions were not accurate. Other elements of the Loral Technology Transfer Control Officer's presentation, not addressed here, were also inadequate.

Instructions to the Independent Review Committee Regarding Public Domain Information

When, on April 22, 1996, the Independent Review Committee met for the first time at the offices of Loral in Palo Alto,[217] one of the first speakers was Loral's Technology Transfer Control Manager, William Schweickert. Schweickert presented a two-page briefing on technology export control as it applied to the Independent Review Committee.

Two of the Independent Review Committee members were not present at that time, and the PRC visitors also were not present.[218]

The first page of the briefing material began by stating that Loral did not have an export license covering the Independent Review Committee failure review in which the audience was participating.[219]

It went on to list what could be done by the Independent Review Committee without a license. This list included:

- **"Receive technical information from CGWIC [China Great Wall Industry Corporation]"**
- **"Request clarification"**
- **"Ask questions"**
- **"Indicate acceptance or rejection of conclusions"**
- **"Discussions must be limited to the data presented or to information in the public domain"** [220]

The second chart listed the activity the Independent Review Committee could not engage in without a license. This list included:

- **"Disclosure of launch vehicle/satellite detail design, manufacturing processes or computer source code data"**
- **"Disclosure of analytical tools, methodology, algorithms not in the public domain"**
- **"Disclosure of information that will enhance the launch site facilities or launch vehicle/missile capabilities of the PRC"** [221]

The instruction in the briefing chart that said, "discussions must be limited to the data presented or to information in the public domain" indicates that the Independent Review Committee members can freely discuss information in the public domain.[222] This statement was not correct.

State Department Views on Public Domain Information

In general, a U.S. citizen may transfer public domain information to a foreign national. However, such a transfer is not allowed if it occurs in the performance of a defense service, which is defined in Part 120 of the International Traffic in Arms Regulations.

In a defense service, a person or a company does a service for, or on behalf of, a foreign party, directly related to a commodity on the munitions list.

The expertise and experience of the person making the disclosure, and the circumstances of the disclosure, are important in determining whether a defense service has been performed through such a disclosure. As an example, simply giving a foreign national an article from the Encyclopedia Britannica is not an export requiring a license. If, however, the article is provided to a foreign national by an experienced engineer in the context of specific technical discussions, a defense service that requires a license may have been performed.

Thus, it is possible to perform a defense service while using only public domain information. A person with technical expertise or experience may guide or shape a discussion, leading it in some way by using the public domain information that is being provided. In this way, the person may convey some knowledge, some ability, or some expertise, and thus may be performing a defense service.

Defense Department Concludes That the Independent Review Committee's Work Is Likely to Lead to the Improved Reliability of PRC's Ballistic Missiles

The Defense Technology Security Administration stated in its 1997 assessment of the Independent Review Committee activities that "[t]he significant benefit derived by China from these activities are likely to lead to improvements in the overall reliability of their launch vehicles [rockets] and ballistic missiles and in particular their guidance systems." [223]

The Defense Department 1996 assessment stated:

> *The [Independent Review Committee] second meeting minutes provides two alternate causes for the guidance system failure that were previously ruled out or not cited by [the China Academy of Launch Vehicle Technology].*

Furthermore, [the Independent Review Committee] recommends specific testing to confirm/deny these alternative causes that otherwise would likely not have been done by China.

If true failure turns out to be one of these alternatives, then the [Independent Review Committee] will have solved the guidance problem for [the China Academy of Launch Vehicle Technology] and possibly prevented a future failure of a [rocket] or developmental missile.

The Defense Department 1996 assessment further stated:

The [Independent Review Committee] Preliminary Report recommends specific guidance platform problems that should be studied and fixed. This could improve the success of their guidance platforms for [rockets] and missiles.

THE LONG MARCH 3B GUIDANCE SYSTEM AND BALLISTIC MISSILES

The Long March 3B guidance system is judged by the Select Committee to be among the systems capable of being adapted for use in the PRC's planned road-mobile intercontinental ballistic missiles. According to the Select Committeeís technical expert, the lightweight and compact design of the Long March 3B guidance system makes it among the systems capable of being used on a small, solid-propellant missile like the PRC's DF-31 intercontinental ballistic missiles. The accuracy of the Long March 3B guidance system is sufficient to target U.S. cities, although there is no basis for assuming greater guidance accuracy than would be achieved with larger, heavier inertial measurement units such as those used on the PRC's currently deployed CSS-4 intercontinental ballistic missile. If the Long March 3B inertial measurement unit were utilized on an intercontinental ballistic missile (ICBM), its advantage would be its lower cost, smaller size, lighter weight, and proven track record. Its disadvantage would be that the Long March 3B inertial measurement unit would require modification to be rugged enough for use on the road-mobile DF-31. If another, better system is available, however, it is more likely to be chosen for that mission.

The interagency review team, in its July 1998 assessment, stated that the advice given to the PRC by the Independent Review Committee could reinforce or add vigor to the PRC's design and test practices. In December 1998, the U.S. Government internally reported that the Independent Review Committee may have improved the reliability of the Long March 3B guidance system and, by extension, other rockets that use this guidance system. And if the PRC acquired or developed a manufacturing or testing process for their rocket program that could benefit their missile programs, they could incorporate it into those programs.

The Cross-Fertilization of the PRC's Rocket and Missile Design Programs

Chang Yang attended both the Palo Alto and Beijing Independent Review Committee meetings. Chang, a PRC engineer, is the Vice-Director of the Beijing Institute of Control Devices. Given the cross-fertilization between the PRC's rocket guidance system designers and intercontinental ballistic missile guidance system designers, Chang's participation in the Independent Review Committee likely ensured that any significant information imparted by the Independent Review Committee members was used to improve the PRC's ballistic missile systems. Chang certainly could have passed on significant information to the engineers working on ballistic missile guidance systems.

The interagency review team found that the technical issue of greatest concern was exposing the PRC to Western diagnostic processes, as suggested by Loral and Hughes.[224] This exposure could improve the PRC's pre- and post-flight failure analysis for their ballistic missile programs. This, in turn, could increase the PRC's future ballistic missile reliability.[225]

The interagency review team also reported that the Independent Review Committee provided the PRC with alternative possible causes of the failure that the PRC had apparently not previously considered, at least to that point in their investigation.[226]

Finally, the interagency review team reported that advice given to the PRC by the Independent Review Committee could help to reinforce or add vigor to the PRC's adherence to good design and test practices.[227] This information could be used by the PRC to assess the failure of any future ballistic missiles or rockets.[228]

The Defense Technology Security Administration determined that:

> *The IRC's activities encompassed a wide range of investigatory, engineering, and corrective analyses, including the provision of "Action Items" identifying additional research and testing approaches and specific recommendations for improvement in [rocket] design, manufacturing, testing and quality assurance processes.*[229]

Because of the level of interaction between the China Academy of Launch Vehicle Technology's rocket and intercontinental ballistic missile programs and the affiliations of the PRC members involved in the Independent Review Committee, the experience gained in diagnostic and failure investigation techniques during their participation in the Independent Review Committee could assist the PRC in its future rocket and ballistic missile development and testing programs.

The Independent Review Committee Aided the PRC In Identifying the Cause of the Long March 3B Failure

China Great Wall Industry Corporation's final investigation report indicated that the true failure mode was discovered by the end of May 1996 after repeated tests and analysis. China Great Wall Industry Corporation reported that the root cause of the failure was most probably the lack of output in the three gold-aluminum engagement joints inside the power amplifier module (HMS501J) for the servo-loop of the follow-up frame. The PRC final investigation report said, "the joint deterioration caused the loop failed to work [sic]." [230]

The Defense Technology Security Administration assessment of the Independent Review Committee activities stated: "[The Department of Defense] considers it highly probable that, as a result of the [Independent Review Committee's] activities, the PRC has determined the root failure cause and is making progress toward correcting underlying design, manufacturing, test and quality assurance processes for the [Long March 3B's] guidance unit." [231]

The interagency review team assessed in July 1998 that the true failure mode may have been discovered more quickly by the PRC as a result of the Independent Review Committee's report.[232]

According to the Department of Defense, the Independent Review Committee very likely led the PRC to discover the true failure of the Long March 3B guidance system:

> *Stating it simply, it can be shown that before [the] IRC [Independent Review Committee], the Chinese team had narrowed the most-probable failure scenario to a particular area of the inertial platform (inner frame gimbal).*
>
> *It can also be shown that in the IRC draft report delivered to China, that the IRC pointed out that the failure could also be in two other places (namely the follow-up frame gimbal or in an open-loop feedback path) and stated that China should explain some as-yet unexplained data output (concerning the follow-up frame); [the] IRC went on to recommend that China perform tests that would prove/disprove all three scenarios.*
>
> *It can be shown that after the IRC report (and suspension of IRC activities), the Chinese team performed specific tests for these scenarios, and that shortly after the IRC report, these tests resulted in the Chinese team ruling out their original failure scenario (the inner frame gimbal) and resulted in isolating the follow-up frame gimbal as the source of the failure.*[233]

The PRC Implemented All of the Independent Review Committee's Recommendations

At the Pre-Shipment Review on April 14, 1997 for the upcoming PRC launch of Loral's Mabuhay satellite, the China Academy of Launch Vehicle Technology announced that it was taking 44 corrective actions to address the cause of the Long March 3B failure.

These corrective measures included discarding all remaining HMS501J power amplifier modules from the batch used on the Long March 3B flight that failed.[234]

All of the Independent Review Committee's recommendations from its Preliminary Report are addressed by these 44 corrective actions. *Selected recommendations and PRC corrective actions are detailed on the overleaf:*[235]

PRC Corrective Actions Address Independent Review Committee Recommendations

INDEPENDENT REVIEW COMMITTEE RECOMMENDATION *	CHINA ACADEMY OF LAUNCH VEHICLE TECHNOLOGY CORRECTIVE ACTION
Short Term #4: **Improve environmental testing.**	• "Platform's acceptance test will be stricter, and the acoustic test will be involved in the acceptance tests...." (CALT Action #7)
Short Term #2: **Study detailed design of torque motor and wiring** to reduce impact of harness motion or deflection of solder joints. *Long Term #2:* **Review designs and avoid single point failures – increase redundancy.**	• "All of the platform's movable connections will adopt double-jointed and double-wired connection, such as the torque motor's brushes. As for fixed connections, double-jointed and double-wired connections will be adopted as many as possible." (CALT Action #9) • "The conductive slip ring is one of the important components inside the platform ... CALT had adopted measures to increase the conductive lip ring's reliability, and upgraded reliability technology and screening measures to guarantee its normal working status." (CALT Action #10)
Long Term #2: **Review designs and avoid single point failures – increase redundancy.**	• "CALT had increased grounding points of platform's power supply circuits. All of the platform's four stabilization circuits will triple-redundantly powered." (CALT Action #11)
Short Term #2: **Study detailed design of torque motor and wiring** to reduce impact of harness motion or deflection of solder joints. *Short Term #3:* **Improve quality control in manufacturing.** *Long Term #1:* **Strengthen quality control practices and training.**	• "To improve soldering technology, tooling and working environment to operate and detect easier. For example, adding special tooling, strengthening inspection measures to assure the welding quality." (CALT Action #15)
Short Term #3: **Improve quality control in manufacturing.** *Long Term #1:* **Strengthen quality control practices and training.**	• "To strengthen soldering quality check, including pre-soldering raw material detect, post-soldering non-destructive tension test and sampling destructive test for key parts." (CALT Action #16)

* The Independent Review Committee recommendations are listed in their entirety under the heading "Substance of the Preliminary Report" in the "Overview of Events" earlier in this chapter.

PRC Corrective Actions Address Independent Review Committee Recommendations (continued)

INDEPENDENT REVIEW COMMITTEE RECOMMENDATION *	CHINA ACADEMY OF LAUNCH VEHICLE TECHNOLOGY CORRECTIVE ACTION
Short Term #4: **Improve environmental testing.**	• "To strengthen flight resume criterion after failure." (CALT Action #33)
Short Term #3: **Improve quality control in manufacturing.** *Long Term #1:* **Strengthen quality control practices and training.**	• "To supervise the manufacturing of key/critical elements so as to assure its quality." (CALT Action #34)
Long Term #1: **Strengthen quality control practices and training.**	• "To strengthen technical exchange among all Long March families." (CALT Action #37)
Short Term #3: **Improve quality control in manufacturing.**	• "To strengthen education of quality control to all of the employees and to link their incomes with quality." (CALT Action #38)
Short Term #5: **Improve range safety.**	• "To improve safety control measurement in launch site." (CALT Action #40)

* The Independent Review Committee recommendations are listed in their entirety under the heading "Substance of the Preliminary Report" in the "Overview of Events" earlier in this chapter.

Loral does not believe that the PRC's actions resulted from the Independent Review Committee. Loral stated in an update to its State Department disclosure provided at the request of the Select Committee that "none of the Chinese's [sic] announced improvements to its Long March 3B rockets was the result of Loral's participation in the Independent Review Committee." [236]

However, the corrective actions presented by the PRC in April 1997 are much more comprehensive than the list of corrective actions presented a year earlier at the Apstar 1A pre-flight briefing in April 1996.[237]

At the Apstar 1A briefing, which preceded the Independent Review Committee activities, the PRC listed:

- **Six "comprehensive enhancements for [the] inner frame axle circuit"**
- **Several general reliability design review actions to be completed in 1997**
- **Ten "production assurance" corrective actions**[238]

The 1996 briefing expressly matched only two corrective actions from the 1997 briefing: to increase reliability of the inertial measurement unit's slip rings (1997 corrective action #10 of 44) and to perform a review of the Long March 3B design toward improving the overall reliability (1997 corrective action #21 of 44).[239]

The Independent Review Committee Helped the PRC Improve the Reliability of Its Long March Rockets

The Defense Technology Security Administration stated in its assessment of the Independent Review Committee activities that "[t]he significant benefits derived by China from these activities are likely to lead to improvements in the overall reliability of their launch vehicles [rockets] . . . and in particular their guidance systems."[240] Likewise, the interagency review team reported in their assessment that the advice given by the Independent Review Committee could improve PRC space rocket reliability.[241]

By identifying the true Long March 3B failure mode, and additional modifications for the Long March 3B inertial measurement unit, it is likely that the Independent Review Committee helped the PRC avoid future failures of the Long March 3B.

U.S. COMPANIES' MOTIVATIONS TO LAUNCH SATELLITES IN THE PRC

Competitive International Launch Industry

The international space launch services industry is very competitive. Europe, China, Russia, Ukraine, and Japan are active competitors in this market. The main competitor to U.S. companies for commercial launch services is Europe's Arianespace. The Congressional Research Service reports that "Europe has a 50-60% share of the commercial launch services market, while the United States has 30-40%, and China and Russia share the rest." Ukraine and Japan have not yet launched satellites on a commercial basis, although both have contracts to do so.[242]

Several factors motivate U.S. companies to launch satellites in the PRC. International consortia with PRC investors can apply pressure for, or force the use of, PRC launch services. The backlog of available rockets elsewhere is a factor, and the comparatively low price is also an inducement.[243]

Launch Backlog

ROCKET	WAIT (YRS)	# OF SATELLITES IN BACKLOG	LAUNCH RATE PER YEAR
Delta II	3.2	42	13
Zenit	3.0	3	1
Atlas	2.9	26	9
Long March	2.7	16	6
Ariane	2.4	41	17
Proton	2.3	21	9

Source: Aerospace Industries Association datasheet titled "China/Satellite Launch Fact Sheet" dated 6/3/98.

PRC Commercial Launch Services

The PRC offers several versions of its Long March rockets for commercial launch services through China Great Wall Industry Corporation. According to the Congressional Research Service, "China reportedly has about 10% of the worldwide market for commercial space launches." [244]

The PRC is the locus of an expanding marketplace for satellite-based telecommunications services, including mobile telephone services, direct broadcast television and digital data services. This has spawned numerous enterprises that hope to capitalize on this market and that include PRC investment.

Frequently, these wholly or partly PRC-owned customers for launch services require that their satellites be launched by China Great Wall Industry Corporation. Examples include the Asia Pacific Telecommunications Satellite Company, Mabuhay, and Asiasat. This is the leading reason for U.S. satellite manufacturers to launch their satellites in the PRC.

PRC Launches Are Subsidized

Because of the PRC's non-market economy, the potential for technology transfer, and political concerns, the United States agreed in 1989 to grant export licenses for launches of U.S.-built satellites in China only on several conditions. These conditions included an agreement by the PRC "to price its launch services 'on a par' with Western companies." [245]

That six-year agreement was signed in 1989 and expired in 1994. A new seven-year agreement was signed on March 13, 1995.

According to the Congressional Research Service, the "Bilateral Space Launch Services Trade Agreement" with the PRC specifies:

- **Geostationary Earth Orbit satellite (GEO)[246] launches must be priced on a par with Western prices**
- **If the price is within 15%, it will normally be considered consistent with this obligation**

- **Prices more than 15% below will be examined in detail**
- **Low Earth Orbit satellite (LEO)[247] launches must be priced on a par with Western prices** [248]

The PRC was accused of violating this agreement in a 1990 contract to launch the Arabsat satellite for $25 million. The main competitor for that launch, Arianespace, turned to the French and U.S. governments to prohibit the export of the satellite, which included U.S.-built components, to the PRC. The Arabsat consortium eventually terminated its contract with the PRC, and launched on an Arianespace rocket.[249]

According to the U.S. Trade Representative, "Arabsat became the first in a series of PRC bids that have been as low as half those offered by Western bidders." [250]

The Intelsat VIIA launch services were won by China Great Wall Industry Corporation "with a bid of $56 million, far below the $100-110 million bid by Arianespace." [251]

The price China Great Wall Industry Corporation bid for launching the Loral-built Mabuhay satellite was 22-26% below Western prices.[252]

Additionally, the PRC bids to launch the Apstar-1, Apstar-2, Asiasat-2, and Echostar satellites were all 22-36% below Western bids.[253]

In May 1997, the U.S. Trade Representative stated that it believed the PRC had violated the pricing provisions of the bilateral agreement in connection with the launch of the Loral-built Mabuhay satellite. The PRC disagreed with this allegation.[254]

CHRONOLOGY OF KEY EVENTS

1988

October 4	**Intelsat awards Intelsat VII contract to Loral** for up to nine satellites. This fixed-price contract had a total value of nearly $1 billion. Intelsat had released the RFP for this procurement on October 1, 1987.

1992

April 24	**Intelsat awards contract to China Great Wall Industry Corporation** (CGWIC) for launch services – eventually covering the launch of the Intelsat 708 satellite in February 1996. Intelsat had released an RFQ for this procurement on July 16, 1991.
May 11	**Loral submits export license application** to State Department covering export to the PRC of technical data supporting launch.[255]
September 18	**State Department issues export license** No. 533593 for Loral export of technical data supporting a satellite launch (Form DSP-5).[256]
September 4	**Loral submits export license application** to State Department for export of the Intelsat 708 satellite to the PRC.[257]

1993

Mid-1993	**Intelsat exercises option for Intelsat 708 satellite from Loral.** The 708 satellite is identical to the 706 and 707 units. The 706 was the first in the Intelsat VIIA program.
July 14	**State Department issues license** No. 544724 for export of Intelsat satellite to the PRC for launch (Form DSP-5).[258]

1994

1994	**Loral and Intelsat employees take site survey trip to Xichang, PRC** to inspect facilities for upcoming Intelsat 708 launch. Facilities described as primitive but workable.

1995

April 7-8	**Loral briefing package is provided to China Aerospace Corporation (CASC)** describing Loral and its capabilities, along with a proposed ten-year joint technology development program between Loral and CASC.[259]
June 6	**Loral requests waiver to transport the Intelsat 708 satellite** on a foreign flag aircraft to the PRC.
June 9	**Loral signs Memorandum of Agreement with CASC** for a ten-year joint technology development program.[260]
November 2	**Loral sends letter to CASC "In Furtherance of the Technology Cooperation Agreement,"** enclosing performance specification documents for a solar panel, a propellant tank and a pressurant tank, and expressing interest in CASC manufacturing such articles for future Loral satellite programs.[261]

1996

January 11	**Intelsat 708 satellite is shipped** to Xichang, PRC, launch site.[262]
January 16	**Loral Export Control Manager William Schweickert sends e-mail to Loral Export Control Officer Duncan Reynard describing security issues/infractions** that Col. Nicholas Alexandrow of the Defense Technology Security Administration (DTSA) discussed with Schweickert that morning. The issues were raised by DTSA monitor Steven Prichard at the Xichang launch site and include unescorted PRC nationals, violations of the Site Security Plan and the Technology Transfer Control Plan (TTCP), and lack of cooperation by Loral staff.[263]
January 24	**Loral received and reviewed the Apstar technical data export license,** which prohibited any discussion or release under the license of any technical data concerning rocket failure analysis or investigation.

February 15	**Intelsat 708 launch failure occurs** in Xichang at 3 a.m. local time.[264] U.S. personnel taken to crash site at 10 a.m.[265] Not allowed to visit the debris field until late in the afternoon.
February 16	**Debris recovery operation begins** at crash site and includes Loral, Intelsat, Pinkerton, and PLA personnel.[266]
February 17	**Loral memorandum from Muhammad Wahdy of Loral and acknowledged by DTSA's Prichard** documents debris recovery. This report estimated that 30 percent of the command processors, which contain the encryption electronics, were recovered.
February 19	**Debris is shipped to Palo Alto,** California, by Loral personnel.
February 21	**J&H Marsh & McLennan Vice President Paul O'Connor** sends letter to China Great Wall Industry Corporation (CGWIC) suggesting CGWIC implement an aggressive public relations campaign for underwriters.[267]
February 22	**J&H Manager in Paris, Jacques Masson, sends letter to O'Connor** reporting discussions with French insurance community regarding the impact of Intelsat 708 failure on future insurance programs. Mentions need to create an "independent inquiry board."[268] **Loral received and reviewed the Mabuhay technical data export license,** which prohibited any discussion or release under the license of any technical data concerning rocket failure analysis or investigation.
February 26	**Insurance underwriters for Apstar-1A program become increasingly disappointed** regarding the lack of an independent and international failure review committee.[269]

Paul O'Connor (J&H) provides CGWIC with a failure review committee schedule modeled after an Ariane failure review plan.[270] O'Connor urged CGWIC to allow J&H to obtain failure review conclusions first.[271]

February 27 — **CGWIC issues a press release** that identifies the cause of the launch failure to be the inertial platform in the Long March 3B control system.[272]

February 28 — **O'Connor (J&H) outlines for CGWIC minimum requirements** for the Apstar-1A reinsurance program to continue.[273]

March 4 — **Intelsat engineer Daniel Lilienstein writes memorandum to Intelsat** management documenting unsafe conditions at Xichang launch site during Intelsat 708 launch.[274]

March 9 — **Hughes personnel Pulcher, Lanzit, Arthur, Yiu, and Dome visit Xichang launch site** in connection with upcoming Apstar-1A launch.[275]

March 10 — **Hughes personnel Pulcher, Lanzit and Arthur meet with representatives of CGWIC,** China Launch and Tracking Control General Administration (CLTC), China Academy of Launch Vehicle Technology (CALT), Asia Pacific Telecommunications (APT), and several insurance underwriters in Xichang regarding the upcoming Apstar-1A satellite launch.[276]

March 14 — **Apstar-1A insurance meeting is held in Beijing,** involving representatives of APT, CGWIC, J&H, Hughes, CLTC, and CALT. J&H official O'Connor presents insurance demands: (1) a final PRC report on the cause of the Long March 3B launch failure, and (2) an independent review of the PRC investigation.[277]

CGWIC sends letter to Loral President Berry inviting Loral to attend meeting of the PRC Failure Investigation Committee in Beijing on March 20-22, 1996.[278]

March 18

Loral letter to CGWIC advises that Loral and Intelsat cannot attend the Failure Investigation Committee meeting on such short notice.[279]

March 20

CGWIC sends letter to Loral inviting Loral and Intelsat to the Failure Investigation Committee meeting in Beijing at the end of March or beginning of April.[280]

J&H Manager Jacques Masson in Paris identifies potential participants in an independent review committee for the Intelsat 708 failure investigation.[281]

March 21

Loral letter to CGWIC advises that Loral can only attend the Failure Investigation Committee meeting if invited by Intelsat.[282]

Insurance underwriter, ACE Ltd., advises J&H that CGWIC's actions regarding the Intelsat 708 failure investigation were unacceptable and the Apstar-1A insurance contract was in jeopardy.[283]

March 27

CGWIC letter to Loral invites Loral to Failure Investigation Committee meeting in Beijing from April 10-12 as guests of Intelsat.[284]

March 28

CGWIC issues press release listing four possible failure modes: (1) broken wire to inner torque motor, (2) blocking of inner frame axis, (3) open loop of follow-up frame, (4) environmental stress.[285]

March 29

Loral letter to CGWIC advises that Loral will attend the Failure Investigation Committee meeting and will send Loral personnel Wah Lim, Nabeeh Totah and Nick Yen.[286]

March	**Intelsat Board of Governors decides** to terminate all existing launch service agreements with CGWIC.
April 3	**Letter to U.S. Department of Commerce,** Bureau of Export Administration and U.S. Department of State, Office of Defense Trade Controls (ODTC), wherein Duncan Reynard, Loral, requests clarification as to which agency has licensing jurisdiction over matters concerning the Mabuhay and Apstar IIR programs. **Additionally, Loral recommends that ODTC reissue licenses** for these two programs to include the following language: "Questions and comments about Long March launch failures or investigations must be reviewed and approved prior to release in accordance with the procedures in the Technology Transfer Control Plan which was provided with the applicant's license application."
April 4	**CGWIC letter invites Hughes** to participate in an Independent Oversight Team.[287]
April 5	**CGWIC reports to J&H that an Independent Review Committee is being established** to meet the insurance community's minimum requirements to insure the upcoming Apstar-1A launch.[288]
April 10-12	**Intelsat and Loral personnel are observers at the Failure Investigation Committee meeting in Beijing.** PRC presents the results of their investigation into the launch failure (three volumes of data, reports, and conclusions). Loral personnel present: Lim, Totah, and Yen. Intelsat personnel present: Terry Edwards.[289]
April 11	**CGWIC contacts Bansang Lee (Loral's representative in the PRC)** to invite Lim to chair an Independent Review Committee (IRC). Lee passes invitation to Lim.[290]

Government Security Committee (GSC) meeting at Loral in Palo Alto. Loral President Robert Berry reports that he and others have been invited to review the PRC investigation into the Intelsat 708 launch failure. The U.S. review team will not provide advice or direction on how to correct deficiencies, but will advise the PRC that it must be more open and truthful about their launch problems. GSC member Steven Bryen suggests that Loral obtain State Department approval for any responses provided to the PRC by this review team.[291]

April 14

The Independent Review Committee (IRC) charter is established to review the work of the PRC's Failure Investigation Committee. A copy of the charter is faxed to Hughes IRC member Robert Steinhauer.[292]

April 15-16

Apstar-1A reinsurance meeting is held in Beijing, including representatives of APT, Hughes, CGWIC, and the insurance industry.[293] Specific attendance includes: Hughes personnel Steinhauer, John Smay, Pulcher, Lanzit, Wong, Guan, and Lang; Loral personnel Wah Lim and Nick Yen; J&H personnel Swanson, O'Connor, Quinn, Davis, Zhang, Masson, and Chan.

April 16

Wah Lim briefs the Apstar-1A reinsurance meeting audience on the IRC creation, membership, and charter.[294] One of Lim's briefing charts states: "IRC Objectives – To ensure the success of future Long March series launches: . . . Recommend to China Aerospace Corporation & CGWIC any other areas of improvement."[295]

April 17

Lim sends a letter to CGWIC inviting the PRC to attend an IRC meeting in Palo Alto, on April 22-23, 1996.[296]

Lim sends a letter to Steinhauer at Hughes confirming the dates for the IRC meetings in Palo Alto and Beijing.[297]

April 19

Loral legal counsel Julie Bannerman, Export Control Officer Duncan Reynard, and Technology Control Manager William Schweickert learn of imminent arrival of PRC visitors.[298]

April 22

Reynard first learns that morning about PRC visitors coming (that day) for an IRC meeting. He learns this from Schweickert.

The IRC meeting in Palo Alto begins.[299] Short technology export briefing given by Schweickert at the beginning of the first day. The briefing advises the IRC members that they have no export license for the activity, and what actions are permitted.[300] The PRC visitors are not present on the first day. IRC members John Holt and Reinhard Hildebrandt are not present on the first day. The IRC members discuss the PRC launch failure investigation as documented in reports previously furnished by the PRC. Also, the IRC members draft numerous questions for the PRC.[301]

April 23

The IRC meeting in Palo Alto continues for a second day. The PRC visitors are present. British IRC member Holt is present. The IRC questions regarding the PRC failure analysis are presented.[302]

German IRC member Hildebrandt and PRC visitors arrive in afternoon.[303]

Loral's Yen briefs U.S. Government officials, including State Dept. staff: Oldenberg, Bemis, and Chih; Dept. of Transportation: Welles; Dept. of Commerce: Farmer, Chandler; and Dept. of Treasury: Murphy on the Long March 3B failure, the IRC and the intent of the IRC to issue a report.[304]

April 24

The IRC meeting in Palo Alto adds a third day to accommodate the PRC visitors' delayed arrival. Hughes IRC members John Smay and Robert Steinhauer are not present.[305]

April 25	**Steinhauer meets with Professor Huang** in Torrance, California, to learn what happened at IRC meeting on April 24. Also discussed PRC manufacturing processes for the inertial measurement unit (IMU) on the Long March 3B.[306] **Yen faxes minutes of the first IRC meeting to CGWIC.**[307]
April 30–May 1	**The second IRC meeting is held in Beijing.** Ten to 20 PRC nationals are present to answer questions from the IRC. U.S. participants are Loral's Lim, Totah, and Yen, Smay from Hughes, and Frederick Ormsby.[308]
April 30	**The IRC meets in Beijing.** Meeting covers introductions, overview, and answers to the IRC questions from the first meeting in Palo Alto.[309] That evening the IRC members caucus at their hotel to discuss issues and plan for the next day.[310] They decide during the caucus to ask for a splinter meeting.
May 1	**The IRC meeting in Beijing continues.** Splinter meeting held on subject of control systems and the inertial platform. Splinter meeting attended by Fred Chan, Jack Rodden, Holt, and Yen. The IRC members are given tours of several facilities: IMU assembly and IMU test facilities.[311] That evening they dine as guests of the PRC.[312]
May 2	**Rodden, Chan, and Smay go sightseeing with Madame Zhou,** the PRC representative for the Asia Pacific Telecommunications Company.[313]
May 2-5	**British IRC member Holt sends draft** he wrote by e-mail to Hughes IRC member Smay on May 2. On May 4, Smay sends e-mail to Holt providing comments on the draft – that e-mail message is also faxed to Lim at Loral.[314] On May 5, Holt sends e-mail to Smay thanking him for his comments.[315]

May 3

Totah sends memorandum to Lim including comments, conclusions and short-term and long-term recommendations concerning the failure.[316]

Totah sends handwritten memorandum to Lim advising that he has made comments on Holt's draft, and that the draft was incomplete.[317]

Holt sends fax to Lim, including four pages of draft material on the cause of the failure.[318]

Smay writes 20 pages of draft material for the IRC Preliminary Report, including an outline and brief paragraphs for a few sections. Smay assigns a section titled "Recommended Design Fixes" to Steinhauer for drafting.[319]

May 4

Ormsby sends letter to Lim with comments on IRC meetings in Beijing, and includes three recommendations for PRC investigation and analysis.[320]

Smay sends e-mail to Holt with comments on Holt's draft. This e-mail was also faxed to Lim.[321]

May 5

German IRC member Hildebrandt sends fax to Lim with his contributions to the "Preliminary Assessment Report," including stating the need for "an intensive quality inspection" in the PRC IMU integration process and describing Western methodologies for reducing wiring connection problems. Lim's secretary faxes a copy to Yen.[322]

May 6

Holt sends five-page fax to Lim with comments and contributions to the IRC report.[323]

Smay sends the section of the IRC Report that he compiled to Yen.[324]

Yen faxes the minutes from the IRC meetings in Beijing to CGWIC.[325]

May 7

Yen faxes a draft of the Preliminary IRC Report to CGWIC and to the IRC members.[326] Lim directed Yen to do this.[327]

Lim sends a letter to CGWIC, including minutes of IRC meetings on April 30 and May 1, along with action items and preliminary assessments that were made during and after those meetings. Lim indicates that the IRC will provide a formal report to CGWIC by May 10, 1996.

May 8

Holt sends a fax to Yen with comments and contributions to the IRC report, and thanking Yen for the draft of the Preliminary Report.[328]

Steinhauer sends a one-page fax to Yen with comments and contributions to the IRC report, mentioning "de-emphasis of safety issues." Steinhauer states: "In general, I agree with report and its findings." [329]

May 9

Holt sends a one-page "urgent" fax to Yen with Holt's final thoughts on the IRC review. Holt does not concur with CALT's theory about an intermittent wire break because there is no evidence of reconnection.[330]

Hildebrandt sends a one-page fax to Yen stating that he has just received the fax of the draft IRC Preliminary Report. Hildebrandt offers a minor proofreading comment and states that he agrees with the draft.[331]

Steinhauer sends an e-mail to other Hughes employees saying that the IRC Preliminary Report is going to Beijing that night.[332]

May 10

Lim provides a copy of the draft Preliminary Report to Loral General Counsel Bannerman for her review, and he assumes that the draft was okay since he receives no comments from her.[333]

Yen faxes a cover letter and final version of IRC Preliminary Report, less attachments, to CGWIC. Yen also ships complete copies to all IRC members via express mail.[334]

Loral General Counsel Bannerman attempts to halt distribution of the IRC report after Yen faxes the report to the PRC.[335]

Lim sends a letter to IRC members advising of Yen's completion of the "formal IRC Preliminary Report" and that a copy has been sent to them. Lim states that the report is currently being reviewed by the Loral General Counsel's office and asks the IRC members not to discuss the report with non-IRC members.[336]

May 13

Yen faxes the final IRC Preliminary Report to a hotel in Beijing, for O'Connor of the Johnson & Higgins insurance brokerage firm.[337]

Yen also sends a copy of the Preliminary Report to O'Connor's office in Washington, D.C.[338]

Reynard first learns that the report has been sent to IRC members and possibly to J&H.[339]

Lim sends letter to He Xing of CGWIC advising that the IRC has completed the formal Preliminary Report and the report is currently under review by Loral legal counsel. Says he is sending a copy of the report to O'Connor.[340]

Lim sends letter to O'Connor advising that the report will not be furnished to CGWIC until an "export license or an equivalent authorization is obtained." [341]

May 14

Reynard sends memorandum to Berry criticizing the IRC draft report as poorly organized, poorly written, and filled with inaccurate statements and illogical conclusions. Says that the Loral employees involved in this IRC work have already committed seri-

ous violations of the International Traffic in Arms Regulations (ITAR) and and the Missile Technology Control Regime (MTCR).[342]

Bob Kovac of DTSA reads article in *Space News* about Loral IRC investigation and calls Loral's Harold Bradshaw, who subsequently sets up a meeting the next day.

May 15

Yen sends fax to IRC members announcing that the IRC Preliminary Report has been submitted to the U.S. Government for review. During that review, the IRC members are not to disclose or discuss the content of this report with anyone, especially the PRC. The letter also asks that Holt and Hildebrandt (the non-U.S. IRC members) return all correspondence previously received from the IRC Secretary. Distribution: Lim, Ormsby, Steinhauer, Holt, Totah, Kachigan, Smay, Hildebrandt, Chan, and Rodden.[343]

Yen writes trip report to Keer regarding Yen's April 23, 1996 meeting at the U.S. Trade Representative offices in Washington, D.C.[344]

Reynard notifies DTSA (Kovac) and State Department's Office of Defense Trade Controls (Kenneth Peoples) in person and in writing about the IRC and its report. He tells them that an executive summary section of the draft IRC report has been mistakenly sent to CGWIC. Bradshaw (from Loral's Washington, D.C. office) is also present.

Reynard denies that the IRC report has been sent to the PRC. Kovac tells Reynard that Loral may have violated the law, that they must halt all IRC activity, and that they should submit a voluntary disclosure to State Department. Reynard furnishes a copy of the report to Kovac.

Reynard meets with Peoples. Loral's presentation to Peoples is very general. Reynard may have told Peoples that some part of the IRC report was sent to the PRC – Peoples' recollection is unclear.

Reynard sends handwritten fax to Berry summarizing advice from State and DTSA. Includes the words: "Question: did *anything* go to CASC or CGWIC? – we need an *honest* answer to this." [345]

Bannerman sends memorandum to Loral Counsel Zahler reporting Reynard's meetings with U.S. government.[346]

May 16

Steinhauer sends fax to Lim confirming plans to attend IRC meeting in Beijing on June 4-5. The fax further says Steinhauer is in agreement with the preliminary report dated May 10 and "Don't really believe that there is a lot of technology transfer present . . . Hope that your filter at SS/Loral understands situation." [347]

May 17

Bradshaw sends fax to Reynard with copies of export licenses #544724 and #533593, commenting that DOD is upset and Loral seems to fail to take provisos seriously.[348]

Reynard receives from Bannerman several boxes of documents that have been collected from Loral personnel re the IRC activity. Reynard decides to generate an index of these documents over the weekend with the aid of his son.

May 20

Reynard advises Bannerman of his catalogue of the documents. Bannerman tells Reynard to stop that activity. She intends to have outside counsel perform that job. Reynard stores the documents and later turns them over to Poliner of Feith & Zell.

Lim and Yen admit to Reynard that they sent the IRC report to the PRC on May 10.

May 21

Reynard sends letter to William Lowell at the State Department, which briefly describes the circumstances of the IRC and its meetings with the PRC, and Reynard's recent meetings with State Department and DTSA. It says each agency received a copy of the IRC report and that Loral subsequently discovered that

the executive summary of the report was mistakenly faxed to CGWIC. Loral is investigating the matter.[349]

May 23 **Loral outside counsel, Feith & Zell, commences investigation** of the IRC matter.[350]

May 27 **Yen sends letter to all IRC members** advising of Loral correspondence with State Department, and that all future IRC activities are on hold.[351]

May 29 **State Department's William Lowell faxes a letter to Higgins, Corporate General Counsel, Hughes Electronics, to notify Hughes that the State Department has reason to believe that Hughes may have participated in serious violations of the ITAR** by providing unauthorized defense services to the PRC in relation to the February 1996 launch failure of a Long March rocket. Lowell recommends Hughes take immediate steps: cease all related activity that may require approval, provide a full disclosure and enumerate all releases that would be controlled under ITAR.[352]

Lowell also sends a letter to Zahler, VP, Secretary and General Counsel, Loral, advising that there is reason to believe that Loral may have participated in serious violations of ITAR. Lowell recommends Loral take immediate steps: cease all related activity that may require approval, provide a full disclosure and enumerate all releases that would be controlled under ITAR.[353]

May 29-31 **Feith & Zell attorneys visit Loral offices** in Palo Alto to interview Loral personnel.[354]

May 30 **Loral representative** in Washington, D.C., Bradshaw, and Loral outside counsel Feith meet with Lowell at State.[355]

May 31	**Loral Counsel Zahler sends a letter to Lowell at State Department** advising of Loral investigation and retention of outside counsel, and stating that Loral personnel will be interviewed.[356]
June 3	**Reynard sends a memorandum to Lim** instructing him and Yen to retrieve all copies of anything sent out to the IRC Members. Also to ask the IRC Members to certify that no derivative copies were made or distributed.[357]
June 4-6	**Feith & Zell attorneys** conduct follow-up interviews in Palo Alto.[358]
June 4	**Kuelbs from Hughes General Counsel's office sends a letter** to Lowell responding to his letter dated May 29. Hughes reports that they are beginning an internal investigation of the matter.[359]
June 6	**Lim sends letter to O'Connor** asking him to retrieve all IRC-generated documents that the IRC transmitted to him by fax, express mail, or by distribution at any meetings, and to confirm that no derivative copies were made.[360] **Lim sends a letter to all IRC Members** asking them to return all IRC-generated documents and to confirm that no derivative copies were made.[361] **Lim sends a letter to Zhixiong, CGWIC,** asking that they return IRC documents and confirm no derivative copies were made.[362]
June 12	**Smay and Steinhauer send a letter to Lim** advising they cannot comply with request to return the IRC documents, per Hughes Counsel's instructions.[363]
June 17	**Loral submits a Voluntary Disclosure to State Department** through outside counsel, Feith & Zell, regarding suspected ITAR violations surrounding the activities of the IRC.[364]

	CIA submits report to State Department on Independent Review Committee Preliminary Report in response to State Department request. No proliferation concerns.
June 27	**Hughes documents its internal investigation into activities related to the IRC:** "Report of Investigation of Alleged Violations of International Traffic in Arms Regulations (ITAR)" for hand delivery to Lowell (State Department).[365]
July 18	**CGWIC sends a letter to IRC members** advising closure of IRC due to U.S. Government ban.[366]
August	**Department of Defense issues assessment** of Independent Review Committee activity. Moderate harm to national security.
September 26	**Hughes furnishes the State Department a list of nearly 150 names** referenced in the June 27, 1996 Hughes report on the IRC and its exhibits. This was in response to a request from the State Department dated September 23, 1998.[367]
October 21-22	**PRC presents a report on the Long March 3B Failure Investigation** by CGWIC at a Mabuhay program meeting at Loral in Palo Alto. DTSA monitor, Major Smith, was invited to that meeting.[368]

1997

March 19	**Central Intelligence Agency issues assessment of IRC matter** that conflicts with the Defense Department assessment.
March 25	**The State Department issues assessment** based on Defense Department and CIA analyses. Significant improvement to the Long March 3 guidance system. State also reviewed the CIA's assessment and disagreed with it.

May 16	**DOD/DTSA assessment on the IRC matter is issued.** DTSA finds that the IRC performed unauthorized defense services that are likely to lead to improvements in reliability of rockets and missiles. Recommended referral to the Justice Department for criminal prosecution.[369]
August 19	**Agila 2 satellite, formerly named Mabuhay, is successfully launched** from Xichang, PRC, on a Long March 3B. Loral manufactured the satellite.[370]
October 16	**Apstar-2R satellite is successfully launched** from Xichang, PRC. Loral manufactured the satellite.[371]

1998

February 18	**President Clinton approves a waiver** for the Loral-built Chinasat 8 satellite to be exported to the PRC for launch.
May 7	**Hughes documents background information regarding the IRC activities.** This report is furnished to the Space Subcommittee of the House Science Committee on May 8, 1998.[372]
June 15	**Congressional staffs from the House National Security Committee, International Relations Committee, and Science Committee are briefed** on the export control process by officials from the State Department. David Tarbell, Director of DTSA, testifies that a rocket failure analysis was a defense service and therefore subject to license.[373]
October	**Hughes reports on its Internet web site** that "Hughes employees drafted no portion of the report that was prepared by the committee . . ." and the "Hughes employees did not write any portion of this [IRC] report."