PROG# 2449-S date of award thru 12/31/16 no options			Bosworth Printing		HAS Printing & Graphics		MPE Business Forms, Inc.		WBC Inc. dba Lithexcel			
CATEGORY 1: 1,000 TO 49,999 COPIES		Basis of	Stoughton, MA		Franklinville, NY		Dekalb, IL		Albuquerque, NM		GPO Estimate	
ITEM #	DESCRIPTION	AWARD	UNIT RATE	COST	UNIT RATE	COST	UNIT RATE	COST	UNIT RATE	COST	UNIT RATE	COST
I.	COMPLETE PRODUCT:											
1	Printed One Side Only:											
(a)	Makeready and Setup Charges											
1	FORMAT A (1-3/4 X 2-3/8" to 4-1/4 X 5-1/2")	13	55.00	715.00	70.00	910.00	118.00	1,534.00	20.00	260.00	60.00	780.00
2	FORMAT B (4-1/4 X 5-1/2" to 5-1/2 X 8-1/2")	5	55.00	275.00	70.00	350.00	118.00	590.00	20.00	100.00	60.00	300.00
3	FORMAT C (5-1/2 X 8-1/2" to 8-1/2 X 11")	13	55.00	715.00	70.00	910.00	118.00	1,534.00	30.00	390.00	60.00	780.00
4	FORMAT D (3 X 7" to 3-2/3 X 8-1/2")	2	55.00	110.00	70.00	140.00	118.00	236.00	30.00	60.00	60.00	120.00
(b)	Running Per 1,000 Copies											
1	FORMAT A (1-3/4 X 2-3/8" to 4-1/4 X 5-1/2")	276	0.65	179.40	0.80	220.80	2.64	728.64	8.00	2,208.00	0.54	149.04
2	FORMAT B (4-1/4 X 5-1/2" to 5-1/2 X 8-1/2")	114	0.75	85.50	0.80	91.20	3.07	349.98	8.00	912.00	0.64	72.96
3	FORMAT C (5-1/2 X 8-1/2" to 8-1/2 X 11")	325	1.15	373.75	1.70	552.50	4.08	1,326.00	8.00	2,600.00	1.28	416.00
4	FORMAT D (3 X 7" to 3-2/3 X 8-1/2")	97	0.70	67.90	0.80	77.60	3.07	297.79	8.00	776.00	0.55	53.35
2	Printed Two Sides:											
(a)	Makeready and Setup Charges											
1	FORMAT A (1-3/4 X 2-3/8" to 4-1/4 X 5-1/2")	1	65.00	65.00	80.00	80.00	156.20	156.20	20.00	20.00	75.00	75.00
2	FORMAT B (4-1/4 X 5-1/2" to 5-1/2 X 8-1/2")	1	65.00	65.00	80.00	80.00	156.20	156.20	20.00	20.00	75.00	75.00
3	FORMAT C (5-1/2 X 8-1/2" to 8-1/2 X 11")	9	65.00	585.00	80.00	720.00	156.20	1,405.80	30.00	270.00	75.00	675.00
4	FORMAT D (3 X 7" to 3-2/3 X 8-1/2")	1	65.00	65.00	80.00	80.00	156.20	156.20	30.00	30.00	75.00	75.00
(b)	Running Per 1,000 Copies											
1	FORMAT A (1-3/4 X 2-3/8" to 4-1/4 X 5-1/2")	5	0.70	3.50	1.00	5.00	2.74	13.70	10.00	50.00	0.63	3.15
2	FORMAT B (4-1/4 X 5-1/2" to 5-1/2 X 8-1/2")	2	0.80	1.60	1.00	2.00	3.17	6.34	12.00	24.00	0.75	1.50
3	FORMAT C (5-1/2 X 8-1/2" to 8-1/2 X 11")	225	1.25	281.25	1.80	405.00	4.18	940.50	12.00	2,700.00	1.42	319.50
4	FORMAT D (3 X 7" to 3-2/3 X 8-1/2")	2	1.25	2.50	1.00	2.00	3.17	6.34	10.00	20.00	0.58	1.16
II.	PAPER...Per 1,000 Leaves:											
(a)	White Offset Book (50 lb.)/White Writing (20 lb.).....											
1	FORMAT A (1-3/4 X 2-3/8" to 4-1/4 X 5-1/2")	65	2.15	139.75	2.50	162.50	9.20	598.00	4.00	260.00	1.72	111.80
2	FORMAT B (4-1/4 X 5-1/2" to 5-1/2 X 8-1/2")	47	4.30	202.10	5.00	235.00	9.20	432.40	6.00	282.00	3.32	156.04
3	FORMAT C (5-1/2 X 8-1/2" to 8-1/2 X 11")	299	8.55	2,556.45	10.00	2,990.00	13.80	4,126.20	10.00	2,990.00	6.62	1,979.38
4	FORMAT D (3 X 7" to 3-2/3 X 8-1/2")	12	2.90	34.80	8.00	96.00	9.20	110.40	6.50	78.00	2.30	27.60
(b)	Colored Offset Book (50 lb.)/Colored Writing (20 lb.).....											
1	FORMAT A (1-3/4 X 2-3/8" to 4-1/4 X 5-1/2")	1	2.60	2.60	3.50	3.50	11.20	11.20	5.00	5.00	2.30	2.30
2	FORMAT B (4-1/4 X 5-1/2" to 5-1/2 X 8-1/2")	40	5.15	206.00	7.00	280.00	11.20	448.00	7.00	280.00	4.55	182.00
3	FORMAT C (5-1/2 X 8-1/2" to 8-1/2 X 11")	48	10.21	490.08	14.00	672.00	16.80	806.40	13.00	624.00	9.10	436.80
4	FORMAT D (3 X 7" to 3-2/3 X 8-1/2")	1	3.45	3.45	11.00	11.00	11.20	11.20	8.50	8.50	3.00	3.00
(c)	Bright-Neon Color Text (20 lb. Writing or 50 lb. Offset Book).....											
1	FORMAT A (1-3/4 X 2-3/8" to 4-1/4 X 5-1/2")	xxx	xxx	xxx	xxx	xxx	xxx	xxx	xxx	xxx	xxx	xxx
2	FORMAT B (4-1/4 X 5-1/2" to 5-1/2 X 8-1/2")	xxx	xxx	xxx	xxx	xxx	xxx	xxx	xxx	xxx	xxx	xxx
3	FORMAT C (5-1/2 X 8-1/2" to 8-1/2 X 11")	1	21.45	21.45	21.00	21.00	29.40	29.40	20.00	20.00	17.87	17.87
4	FORMAT D (3 X 7" to 3-2/3 X 8-1/2")	xxx	xxx	xxx	xxx	xxx	xxx	xxx	xxx	xxx	xxx	xxx
(d)	White Index (110 lb.).....											
1	FORMAT A (1-3/4 X 2-3/8" to 4-1/4 X 5-1/2")	43	6.95	298.85	8.00	344.00	12.20	524.60	28.00	1,204.00	5.75	247.25
2	FORMAT B (4-1/4 X 5-1/2" to 5-1/2 X 8-1/2")	1	13.90	13.90	16.00	16.00	12.20	12.20	36.00	36.00	11.30	11.30
3	FORMAT C (5-1/2 X 8-1/2" to 8-1/2 X 11")	1	27.60	27.60	33.00	33.00	18.30	18.30	55.00	55.00	22.65	22.65
4	FORMAT D (3 X 7" to 3-2/3 X 8-1/2")	1	9.25	9.25	29.00	29.00	12.20	12.20	42.00	42.00	7.56	7.56
(e)	Colored Index (110 lb.).....											
1	FORMAT A (1-3/4 X 2-3/8" to 4-1/4 X 5-1/2")	168	7.25	1,218.00	9.50	1,596.00	15.50	2,604.00	32.00	5,376.00	6.05	1,016.40
2	FORMAT B (4-1/4 X 5-1/2" to 5-1/2 X 8-1/2")	1	14.50	14.50	19.00	19.00	15.50	15.50	48.00	48.00	12.00	12.00
3	FORMAT C (5-1/2 X 8-1/2" to 8-1/2 X 11")	8	28.95	231.60	38.00	304.00	23.30	186.40	65.00	520.00	23.83	190.64
4	FORMAT D (3 X 7" to 3-2/3 X 8-1/2")	30	9.70	291.00	31.00	930.00	15.50	465.00	48.00	1,440.00	7.96	238.80
(f)	White Offset Book (60 lb.).....											
1	FORMAT A (1-3/4 X 2-3/8" to 4-1/4 X 5-1/2")	xxx	xxx	xxx	xxx	xxx	xxx	xxx	xxx	xxx	xxx	xxx
2	FORMAT B (4-1/4 X 5-1/2" to 5-1/2 X 8-1/2")	xxx	xxx	xxx	xxx	xxx	xxx	xxx	xxx	xxx	xxx	xxx
3	FORMAT C (5-1/2 X 8-1/2" to 8-1/2 X 11")	1	10.20	10.20	18.00	18.00	13.80	13.80	12.00	12.00	9.48	9.48
4	FORMAT D (3 X 7" to 3-2/3 X 8-1/2")	1	3.50	3.50	18.00	18.00	9.20	9.20	10.00	10.00	3.22	3.22
(g)	White Carbonless Bond (CF or CB) (13-20lb.).....											
1	FORMAT A (1-3/4 X 2-3/8" to 4-1/4 X 5-1/2")	1	10.30	10.30	9.00	9.00	15.00	15.00	28.00	28.00	7.25	7.25
2	FORMAT B (4-1/4 X 5-1/2" to 5-1/2 X 8-1/2")	66	20.60	1,359.60	18.00	1,188.00	15.00	990.00	31.00	2,046.00	12.75	841.50
3	FORMAT C (5-1/2 X 8-1/2" to 8-1/2 X 11")	73	41.10	3,000.30	33.00	2,409.00	22.50	1,642.50	40.00	2,920.00	25.65	1,872.45
4	FORMAT D (3 X 7" to 3-2/3 X 8-1/2")	1	13.75	13.75	31.00	31.00	15.00	15.00	36.00	36.00	8.58	8.58

PROG# 2449-S date of award thru 12/31/16 no options			Bosworth Printing		HAS Printing & Graphics		MPE Business Forms, Inc.		WBC Inc. dba Lithexcel			
	CATEGORY 1: 1,000 TO 49,999 COPIES	Basis of	Stoughton, MA		Franklinville, NY		Dekalb, IL		Albuquerque, NM		GPO Estimate	
ITEM #	DESCRIPTION	AWARD	UNIT RATE	COST	UNIT RATE	COST	UNIT RATE	COST	UNIT RATE	COST	UNIT RATE	COST
(h)	Colored Carbonless Bond (CF or CB) (13-20 lb.).....											
1	FORMAT A (1-3/4 X 2-3/8" to 4-1/4 X 5-1/2")	1	10.30	10.30	11.00	11.00	16.40	16.40	30.00	30.00	7.25	7.25
2	FORMAT B (4-1/4 X 5-1/2" to 5-1/2 X 8-1/2")	66	20.60	1,359.60	22.00	1,452.00	16.40	1,082.40	35.00	2,310.00	12.80	844.80
3	FORMAT C (5-1/2 X 8-1/2" to 8-1/2 X 11")	4	41.10	164.40	38.00	152.00	24.60	98.40	46.00	184.00	26.00	104.00
4	FORMAT D (3 X 7" to 3-2/3 X 8-1/2")	110	13.75	1,512.50	36.00	3,960.00	16.40	1,804.00	39.00	4,290.00	8.68	954.80
(i)	White Carbonless Bond (CFB) (13-20 lb.).....											
1	FORMAT A (1-3/4 X 2-3/8" to 4-1/4 X 5-1/2")	1	12.30	12.30	15.00	15.00	22.60	22.60	30.00	30.00	7.75	7.75
2	FORMAT B (4-1/4 X 5-1/2" to 5-1/2 X 8-1/2")	1	24.60	24.60	30.00	30.00	22.60	22.60	35.00	35.00	16.00	16.00
3	FORMAT C (5-1/2 X 8-1/2" to 8-1/2 X 11")	68	49.15	3,342.20	44.00	2,992.00	33.90	2,305.20	46.00	3,128.00	31.95	2,172.60
4	FORMAT D (3 X 7" to 3-2/3 X 8-1/2")	20	16.40	328.00	41.00	820.00	22.60	452.00	39.00	780.00	10.20	204.00
(j)	Colored Carbonless Bond (CFB) (13 - 20 lb.).....											
1	FORMAT A (1-3/4 X 2-3/8" to 4-1/4 X 5-1/2")	1	12.30	12.30	16.00	16.00	22.80	22.80	35.00	35.00	7.95	7.95
2	FORMAT B (4-1/4 X 5-1/2" to 5-1/2 X 8-1/2")	1	24.60	24.60	32.00	32.00	22.80	22.80	44.00	44.00	16.25	16.25
3	FORMAT C (5-1/2 X 8-1/2" to 8-1/2 X 11")	1	49.15	49.15	49.00	49.00	34.20	34.20	51.00	51.00	32.10	32.10
4	FORMAT D (3 X 7" to 3-2/3 X 8-1/2")	35	16.40	574.00	47.00	1,645.00	22.80	798.00	48.00	1,680.00	10.25	358.75
(k)	Colored Vellum-Bristol Cover (67 lb.)											
1	FORMAT A (1-3/4 X 2-3/8" to 4-1/4 X 5-1/2")	xxx	xxx	xxx	xxx	xxx	xxx	xxx	xxx	xxx	xxx	xxx
2	FORMAT B (4-1/4 X 5-1/2" to 5-1/2 X 8-1/2")	xxx	xxx	xxx	xxx	xxx	xxx	xxx	xxx	xxx	xxx	xxx
3	FORMAT C (5-1/2 X 8-1/2" to 8-1/2 X 11")	1	22.20	22.20	37.00	37.00	49.50	49.50	4.50	4.50	19.20	19.20
4	FORMAT D (3 X 7" to 3-2/3 X 8-1/2")	xxx	xxx	xxx	xxx	xxx	xxx	xxx	xxx	xxx	xxx	xxx
III	ADDITIONAL OPERATIONS:											
(a)	Collating multiple forms into sets, including edge bonding of carbonless se	444	9.50	4,218.00	10.00	4,440.00	3.36	1,491.84	15.00	6,660.00	9.00	3,996.00
(b)	Padding up to 100 sheets (assembling sheets into pads, stacking, gum or	1,188	0.08	95.04	0.40	475.20	0.15	178.20	0.25	297.00	0.07	83.16
(c)	Folding (continuous folds).....per 1,000 forms.....	45	7.25	326.25	7.00	315.00	15.00	675.00	15.00	675.00	9.00	405.00
(d)	Banding with kraft paper bands (including corrugated cardboard front and	1	0.25	0.25	0.10	0.10	0.35	0.35	0.15	0.15	0.04	0.04
(e)	Wrapping or shrink-film packaging.....per package.....	3,311	0.25	827.75	0.40	1,324.40	0.25	827.75	0.20	662.20	0.22	728.42
IV	PACKING AND SEALING FOR DISTRIBUTION:											
(a)	Quantities up to 12 lbs., in cushioned shipping bags, or wrapped in shippi	40	2.00	80.00	4.00	160.00	1.25	50.00	1.80	72.00	1.50	60.00
(b)	Quantities over 12 lbs. up to 24 lbs.wrapped in shipping bundles, or packe	1	2.00	2.00	6.00	6.00	1.25	1.25	2.50	2.50	1.75	1.75
(c)	Packing and sealing shipping containers (up to approximately 32 lbs capa	282	2.00	564.00	1.80	507.60	1.25	352.50	1.00	282.00	2.00	564.00
(d)	Palletizing.....each pallet.....	1	26.00	26.00	20.00	20.00	15.00	15.00	48.00	48.00	30.00	30.00
				27,324.87		34,500.40		32,857.38		50,060.85		21,916.35
	DISCOUNT		1.00%	273.25	1.00%	345.00	1.00%	328.57	1.00%	500.61	2.00%	438.33
	NET TOTAL			27,051.62		34,155.40		32,528.81		49,560.24		21,478.02
				AWARDED								

QUOTATION REQUEST

U.S. GOVERNMENT PUBLISHING OFFICE
Atlanta, GA

GENERAL TERMS, CONDITIONS, AND SPECIFICATIONS

For the Procurement of

Flat Sheet Forms

as requisitioned from the U.S. Government Publishing Office (GPO) by the

Department of Treasury/IRS

Single Award - Category 1

CONTRACT TERM: The term of this contract is for the period beginning Date of Award and ending December 31, 2016.

NOTE: DIRECT ALL QUESTIONS OF A TECHNICAL NATURE CONCERNING THESE SPECIFICATIONS TO BETH NICOLAUS (404) 605-9160 Ext. 32707 OR E-MAIL enicolaus@gpo.gov. REFER ALL OTHER QUESTIONS TO THE CONTRACT ADMINISTRATOR – AMINA HARVEY (404) 605-9160 Ext. 32712 OR E-MAIL aharvey@gpo.gov. NO COLLECT CALLS.

ABSTRACT OF PREVIOUS PRICES IS AVAILABLE
on the internet (http://www.gpo.gov/gpo/abstracts/abstract.action?region=Atlanta)
or you may **FAX request** to (404) 605-9185/9186.

This is a Small Purchase Term Contract. Quotes may be submitted via fax (404-605-9185 or 404-605-9186) or mailed to GPO, Atlanta Regional Office, 3715 Northside Parkway NW, Suite 4-305; Atlanta, GA 30327. GPO 910 Form is NOT required. To submit a quote, contractor must return a completed "Schedule of Prices", which is included at the end of this specification. TELEPHONE QUOTATIONS ARE NOT ACCEPTABLE.

All GPO publications referenced in these specifications are available on the internet via the GPO website, http://www.contractorconnect.gpo.gov.

Quotes due by 11:00 a.m., prevailing Atlanta, GA time, on March 11, 2016.

SECTION 1.- GENERAL TERMS AND CONDITIONS

GPO CONTRACT TERMS: Any contract which results from this Quotation Request will be subject to the applicable provisions, clauses, and supplemental specifications of GPO Contract Terms (GPO Pub. 310.2, effective December 1, 1987 (Rev. 6-01), available on the GPO website) and GPO Contract Terms, Quality Assurance Through Attributes Program (GPO Pub. 310.1, effective May 1979 (revised August 2002), available on the GPO website).

DISPUTES CLAUSE: GPO Publication 310.2, GPO Contract Terms, Contract Clause 5. Disputes, is hereby replaced with the June 2008 clause found at www.gpo.gov/pdfs/vendors/contractdisputes.pdf. This clause cancels and supersedes any other disputes language currently included in existing contractual actions.

QUALITY ASSURANCE LEVELS AND STANDARDS: The following levels and standards shall apply to these specifications:

Product Quality Levels:
(a) Printing Attributes -- Level III
(b) Finishing Attributes -- Level III

Inspection Levels (from ANSI/ASQC Z1.4):
(a) Non-destructive Tests - General Inspection Level I.
(b) Destructive Tests - Special Inspection Level S-2.

Specified Standards: The specified standards for the attributes requiring them shall be:

ATTRIBUTE	SPECIFIED STANDARD	ALTERNATE STANDARD*
P-7. Type Quality and Uniformity	Approved Proofs	File Setup / Camera Copy
P-9. Solid and Screen Tint Color Match	Pantone Matching System Color	

*In the event that the Specified Standard is waived the Alternate Standard will serve as its replacement.

EXTENSION OF CONTRACT TERM: At the request of the Government, the term of any contract resulting from this solicitation may be extended for such period of time as may be mutually agreeable to the GPO and the contractor.

ASSIGNMENT OF JACKETS, PURCHASE AND PRINT ORDERS: A GPO jacket number will be assigned and a purchase order issued to the contractor to cover work performed. The purchase order will be supplemented by an individual "Print Order" for each job placed with the contractor. The print order, when issued, will indicate the quantity to be produced and any other information pertinent to the particular order.

PREAWARD SURVEY: In order to determine the responsibility of the prime contractor or any subcontractor, the Government reserves the right to conduct an on-site preaward survey at the contractor's/subcontractor's facility or to require other evidence of technical, production, managerial, financial, and similar abilities to perform, prior to the award of a contract.

PAYMENT: Submit all billing to: Comptroller FMCE, Office of Financial Management Services, U.S. Government Publishing Office, Washington, DC 20401. Using the GPO barcode cover sheet and faxing your invoice to GPO is the fastest and safest method of getting paid. Visit the following website for complete instructions on preparing your voucher and barcode cover page: http://winapps.access.gpo.gov/fms/vouchers/barcode/instructions.html.

NOTE: CONTRACTOR BILLING MUST BE ITEMIZED PER THE SCHEDULE OF PRICES – SEE PAGES 15 THROUGH 17.

In addition, the contractor is require to fax a copy of the voucher/invoice to (470)769-2973 for all orders placed by IRS/Atlanta and (916)974-5907 for all orders placed by IRS/Sacramento.

ORDERING: Items to be furnished under the contract shall be ordered by the issuance of print orders by the Government. Orders may be issued under the contract from Date of Award through December 31, 2016, plus for such additional period(s) as the contract is extended. All print orders issued hereunder are subject to the terms and conditions of the contract. The contract shall control in the event of conflict with any print order. A print order shall be "issued" for purposes of the contract, when it is either deposited in the U.S. Postal Service mail or otherwise furnished to the contractor in conformance with the schedule.

REQUIREMENTS: This is a requirements contract for the items and for the period specified herein. Shipment/delivery of items or performance of work shall be made only as authorized by orders issued in accordance with the clause entitled "Ordering". The quantities of items specified herein are estimates only, and are not purchased hereby. Except as may be otherwise provided in this contract, if the Government's requirements for the items set forth herein do not result in orders in the amounts or quantities described as "estimated", it shall not constitute the basis for an equitable price adjustment under this contract.

Except as otherwise provided in this contract, the Government shall order from the contractor all the items set forth which are required to be purchased by the Government activity identified on page 1.

The Government shall not be required to purchase from the contractor, requirements in excess of the limit on total orders under this contract, if any.

Orders issued during the effective period of this contract and not completed within that time shall be completed by the contractor within the time specified in the order, and the rights and obligations of the contractor and the Government respecting those orders shall be governed by the terms of this contract to the same extent as if completed during the effective period of this contract.

If shipment/delivery of any quantity of an item covered by the contract is required by reason of urgency prior to the earliest date that shipment/delivery may be specified under this contract, and if the contractor will not accept an order providing for the accelerated shipment/delivery, the Government may procure this requirement from another source.

The Government may issue orders which provide for shipment/delivery to or performance at multiple destinations.

Subject to any limitations elsewhere in this contract, the contractor shall furnish to the Government all items set forth herein which are called for by print orders issued in accordance with the "Ordering" clause of this contract.

REGULATIONS GOVERNING PROCUREMENT: The U.S. Government Publishing Office (GPO) is an office in the legislative branch of the United States Government. Accordingly, the Federal Acquisition Regulation is inapplicable to this, and all GPO procurements. However, the text of certain provisions of the Federal Acquisition Regulation as contained in the Code of Federal Regulations (CFR), are referenced in this solicitation. The offeror should note that only those provisions of the Federal Acquisition Regulation which are specifically incorporated by reference into this solicitation, are applicable.

POLLUTION PREVENTION AND RIGHT-TO-KNOW INFORMATION:

(a) Federal facilities are required to comply with the provisions of the Emergency Planning and Community Right-to-Know Act of 1986 (EPCRA) (42 U.S.C. 11001-11050) and the Pollution Prevention Act of 1990 (PPA) (42 U.S.C. 13101-13109).

(b) During performance, in whole or in part, of this contract on a Federal facility, the Contractor shall provide to the Contracting Officer all information needed by the Federal facility to comply with the emergency planning reporting requirements of Section 302 of EPCRA, the emergency notice requirements of Section 304 of EPCRA, the list of Material Data Safety Sheets required by Section 311 of EPCRA, the emergency and hazardous chemical

inventory forms of Section 312 of EPCRA, and the toxic chemical release inventory of Section 313 of EPCRA, which includes the reduction and recycling information required by Section 6607 of PPA.

SECTION 2.- SPECIFICATIONS

SCOPE: These specifications cover the production of face only or face and back forms requiring such operations as electronic prepress, printing, binding, packing, and distribution.

TITLE: Flat Sheet Forms

All ranges/percentages/etc. herein are based on past requirements and/or anticipated requirements and are NOT to be construed as a guarantee.

QUANTITY: Quantities will range from 1,000 to 49,999 copies.

NOTE: Unless otherwise specified on the print order, **NO QUANTITY VARIATION** will be allowed.

TRIM SIZES: Various trim sizes will be ordered and paid for in their respective "Format" classification as follows:

Format "A": 1-3/4" x 2-3/8" up to (and including) 4-1/4" x 5-1/2".

Format "B": Over 4-1/4" x 5-1/2" up to (and including) 5-1/2" x 8-1/2".

Format "C": Over 5-1/2" x 8-1/2", up to (and including) 8-1/2" x 11".

Format "D": 3" x 7" up to (and including) 3-2/3" x 8-1/2".

FREQUENCY OF ORDERS: Approximately 40-50 orders will be issued during the contract period.

Approximately 75% will print face-only and approximately 25% will print face-and-back. Approximately 7% of the orders will require multi-part sets (2-6 parts, average 3 parts) produced on chemical transfer stock – no stubs will be required.

TRIM SIZES:

Format "A" – approximately 32% of the orders.

Format "B" – approximately 14% of the orders.

Format "C" – approximately 50% of the orders.

Format "D" – approximately 4% of the orders.

EXHIBITS: Exhibit A is representative of the Carton Shipping Instructions (IRS Form 6153) which will be furnished. Exhibit B represents the palletizing specifications (9 tier and 15 tier stacking methods) which will be required under this contract. Exhibit C references the Packaging Requirements for Standard IRS Stuffers which will be required under this contract. Exhibit D is representative of Form 2040 that will be utilized during the course of the contract. NOTE: The most current version of these forms will be used. It cannot be guaranteed that future orders will correspond exactly to these exhibits.

GOVERNMENT TO FURNISH:
- Electronic print files will usually be furnished, as reflected below (see "ELECTRONIC MEDIA"); however, occasionally camera copy may be furnished.

- Distribution list(s) – IRS Form 2040 in a fillable PDF file format provided via e-mail (see Exhibit D).

- Quick Reference Guide for 2040 application.

- Form 6153 – IRS Carton Label, with labeling and marking specifications for shipping containers. (See Exhibit A) to be completed ELECTRONICALLY and copied, as necessary. See "PACKING" for additional requirements.

- A supply of blue labels and selection certificates for shipping Departmental Random Copies.

- Performance Records: A *Facsimile Transmission Sheet* will be furnished to the contractor. Information such as the GPO program, jacket, and print-order numbers, quantity, and date of shipment must be filled in by the contractor and faxed/mailed to the GPO on the day shipment is due.

NOTE: GPO Imprint information does NOT print on these orders.

ELECTRONIC MEDIA:
- PLATFORM: MAC and PC/IBM

- STORAGE MEDIA: E-mail and CD-Roms

- SOFTWARE: One Press Quality PDF file or one PDF file with comments for revisions (as indicated on the print order) will be provided. ADDITIONAL SYSTEM TIME WILL BE REQUIRED WHEN FILE REVISIONS ARE REQUESTED BY THE ORDERING AGENCY.

When required by the Government, the contractor shall make minor revisions to the electronic files. It is anticipated that the Government will make all major revisions. Prior to making revisions, the contractor shall copy the furnished files and make all changes to the copy.

NOTE: All Adobe Acrobat and editing software upgrades (for specified applications) which may occur during the term of the contract must be supported by the contractor.

- COLOR(s): May be identified as one or more of the following: RGB, CMYK, Black, and/or Pantone/Spot colors. If necessary, contractor to convert all colors to match ink color as indicated on the print order.

- FONTS: All fonts will be Embedded and/or Embedded Subset. **NOTE: In the event all fonts have not been embedded/embedded subset (font and/or fonts are missing), the contractor is to notify GPO immediately (404-605-9160, Ext. 32707).**

- OUTPUT: 150 line screen for all screen matter / 1200 dpi or higher for remainder

ADDITIONAL INFORMATION:
- Contractor must have the ability to edit PDF files (when furnished by the Government).
- Contractor is not to request that electronic files provided be converted to a different format. If contractor wishes to convert files to a different file format, the final output must be of the same or higher quality.
- The contractor is cautioned that furnished fonts are the property of the Government and/or its originator. All furnished fonts are to be eliminated from the contractor's archive immediately after completion of the contract.
- Identification markings such as register marks, commercial identification marks of any kind, etc., except GPO imprint, form number and revision date, carried in the electronic files, must not print on the finished product.
- PRIOR TO IMAGE PROCESSING, THE CONTRACTOR SHALL PERFORM A BASIC CHECK (PREFLIGHT) OF THE FURNISHED MEDIA AND PUBLISHING FILES TO ASSURE CORRECT OUTPUT OF THE REQUIRED REPRODUCTION IMAGE. ANY ERRORS, MEDIA DAMAGE OR DATA CORRUPTION THAT MIGHT INTERFERE WITH PROPER FILE IMAGE PROCESSING MUST BE REPORTED TO YOUR CONTRACT ADMINISTRATOR.
- THE CONTRACTOR SHALL CREATE/ALTER ANY NECESSARY TRAPPING, set proper screen angles and screen frequency, and define file output selection for the imaging device being utilized. Furnished files must be imaged as necessary to meet the assigned quality level.
- When PostScript Files are not furnished - prior to making revisions, the contractor shall copy the furnished files.
- UPON COMPLETION OF THIS ORDER, THE CONTRACTOR MUST FURNISH FINAL PRODUCTION NATIVE APPLICATION FILES (DIGITAL DELIVERABLE) AND ONE "PRESS QUALITY" PDF FILE WITH THE FURNISHED MEDIA. STORAGE MEDIA MUST BE MAC/PC COMPATIBLE. THE DIGITAL

DELIVERABLES MUST BE AN EXACT REPRESENTATION OF THE FINAL PRODUCT AND SHALL BE RETURNED ON THE SAME TYPE OF STORAGE MEDIA AS WAS ORIGINALLY FURNISHED. The Government will not accept, as digital deliverables, PostScript files, Adobe Acrobat Portable Document Format (PDF) files, or any proprietary file formats other than those supplied, unless specified by the Government.

CONTRACTOR TO FURNISH: All materials and operations, other than those listed under "Government to Furnish," necessary to produce the product(s) in accordance with these specifications.

NOTE: Contractor must acknowledge receipt of all emailed print orders by replying to originating agency's email.

The contractor is required to have Internet access, provided through their Internet Service Provider (ISP) with email and a web browser equivalent to Internet Explorer 6.0 or Netscape 4.0. The contractor is also required to have Adobe Acrobat 7.0 Professional (or more recent) software (not Adobe Reader) and the capability to receive via email and open file attachments compressed into a WinZIP (.zip) file format.

The contractor is required to complete and email IRS Form 2040 daily to the IRS when shipping begins. IRS Form 2040 is in a fillable PDF file format. The majority of the information in the form will be filled in by the IRS prior to being sent to the contractor. The contractor is responsible for the verification and correctness of information supplied back to IRS. If there is any information missing or incorrect, please contact the person indicated on the print order.

NOTES:
1) The contractor MUST complete the Electronic IRS Form 2040 and transmit via email to IRS directly each day the product ships. Any delay or missed input could result in delay of payment. In order for the shipping results to be captured properly, the 2040 must NOT be removed from the original email (do not save to desktop or another file). This proper reply to the email ensures the contractor's compliance is captured.
2) The use of free web-based mail servers such as Hotmail, Yahoo, or G-mail is not compatible for transmitting the IRS Form 2040 e-mail message.

PROOFS: Occasionally, the contractor may be required to furnish a press-quality pdf (via email) or a faxed proof – as indicated on the print order.

The contractor will be responsible for performing all necessary proofreading to insure that the proofs are in conformity with the copy submitted.

When required, proofs will be withheld not longer than 2 workday(s) from date of receipt by the Government to receipt in contractor's plant (approval via fax or email). No proofs will be required for orders placed on the Accelerated Schedule (*see Page 12*).

Contractor furnished proof approval letters will not be recognized for proof approval/disapproval. Only GPO generated proof letters will be recognized for proof approval/disapproval. Contractor must not print prior to receipt of an "OK to print".

- PDF "SOFT" PROOF: One PRESS QUALITY PDF proof (for content only) to be emailed to agency, as indicated on the print order. PDF proof must be ripped using the same Raster Image Processor (RIP) that will be used to produce the product. Proof MUST show color and contain all crop marks. THIS PROOF WILL NOT BE USED/APPROVED FOR COLOR MATCH OR RESOLUTION. NOTE: Contractor must call recipient to confirm receipt.

- FAXED PROOF: Faxed proof (for content only) to be faxed to agency, as indicated on the print order. NOTE: Contractor must call recipient to confirm receipt.

FILMS: Films are not required. If, at the contractor's option, films are used, the Government will not pay for new films due to Author's Alterations. The Government will pay for making digital corrections - not for new films. At the completion of the order, the contractor must provide the Government with storage media (same type of storage media as was originally furnished) containing corrected files in the same format as the original Government furnished material.

STOCK/PAPER: The specifications of all paper furnished must be in accordance with those listed herein or listed for the corresponding JCP Code numbers in the "Government Paper Specification Standards No. 12", dated March 2011.

NOTICE: Copies of the "Government Paper Specifications Standards, No. 12," dated March 2011, are for sale, on a subscription basis, by the Superintendent of Documents, U.S. Government Publishing Office, Washington, DC, 20402 or available in PDF format on the GPO website.

Color of paper furnished shall be of a uniform shade and a close match by visual inspection of the JCP and/or attached color sample(s). The Contracting Officer reserves the right to reject shipments of any order printed on paper the color of which, in his opinion, materially differs from that of the color sample(s).

White and Colored (including Bright-Neon* colors) Writing, basis weight: 20 lbs per 500 sheets, 17 x 22", equal to JCP Code D10.

Offset Book, basis weight: 50 and 60 lbs per 500 sheets, 25 x 38", equal to JCP Code A60 (White) and JCP Code A63 (Colored – including Bright-Neon* colors).

NOTE: 50# Offset Book may be substituted for 20# Writing and 24# Writing may be substituted for 60# Offset Book, when indicated on the print order.

White and Colored Index, basis weight: 110 lbs per 500 sheets, 25-1/2 x 30-1/2", equal to JCP Code K10.

White Ledger, basis weight: 32 lbs per 500 sheets, 17 x 22", equal to JCP Code J10.

White and Colored Chemical Transfer Bond, CFB, basis weight: 13-20 lbs per 500 sheets, 17 x 22", equal to JCP Code O-80.

White and Colored Chemical Transfer Bond, CF or CB, basis weight: 13-20 lbs per 500 sheets, 17 x 22", equal to JCP Code O-80.

White High Quality Xerographic Copier, Laser Printer (qualified product), basis weight: 24 lbs per 500 sheets, 17 x 22", equal to JCP Code 0-61.

Colored Vellum-Bristol Cover, basis weight: 67 lbs. per 500 sheets, 22-1/2 x 28-1/2", equal to JCP Code L24.

***NOTE: Bright-Neon colors shall be equal to Britehue, Astrobrights, Fraser Brights, etc.**

PRINTING: Forms print in one color of ink, usually black. Print face only or face and back, as indicated. When colored ink is required, the contractor is to match the Pantone color indicated on the print order.

NOTE: At contractor's option, the product may be produced via conventional offset or digital printing provided that Quality Level 3 standards are maintained. Final output must be WET INK, pigment-based with a minimum of 150 line screen. Dry ink/toner and inkjet printing are not acceptable. Output must be at a minimum resolution of 2400 x 2400 dpi plus a RIP that provides an option for high quality color matching such as Device Links Technology and/or ICC Profiles. Resolution that is enhanced or simulated by software will not be acceptable.

Forms (i.e. ink) MUST be compatible for usage with a high heat laser printer. No smearing, lifting, or loss of images due to use with a laser printer will be accepted.

The forms printed under these specifications may be used singly or in multiples of two or more forms. Therefore, the contractor must exercise every precaution to insure that all forms printed on any one order will align accurately when used in conjunction with each other.

Forms printed on carbonless paper must be printed on the proper side of the paper to insure proper transfer of the image to the bottom sheets when forms are used in sets of two or more. MULTI-PART FORMS PRINTING COMMON IMAGES MUST REGISTER.

MARGINS: Margins will be as indicated on the print order or furnished copy. Some products may occasionally require bleeds.

BINDING: Each print order will contain complete binding instructions. Various binding styles will be required as follows:

Cutting: Trim to the size indicated on the individual print order.

Padding: Pad in units as required on individual print orders (not to exceed 100 sheets per pad). Gum and crash or any suitable padding compound may be used. Backboards must be 0.02" chipboard, newsboard, or equal. Some orders will require pads without backboards.

Folding: Occasionally, forms will require one to four continuous folds.

Collating: Orders that will require printing on chemical transfer paper will require gathering into sets. MULTI-PART FORMS PRINTING COMMON IMAGES MUST REGISTER. Join parts into sets using suitable edge bonding compound. NOTE: Adhesive used must hold the individual parts of a set together during fill-in and normal handling and permit ready separation of the parts without any damage to the individual parts.

PACKING/LABELING:
Banding: Banding with plain kraft paper bands will be required when indicated on the print order in quantities as specified. Place corrugated cardboard on the top and bottom of each stack prior to banding. See Exhibit C for detailed instructions.

Wrapping/Shrink-film Packaging: Wrap (kraft or shrink-film packaging, as indicated on the print order) packages in quantities as specified on the print order.

Contractor must put chipboard into kraft envelopes that contain IRS sample copies (as indicated on the print order) to ensure the forms are not damaged when processed through small carrier service.

Packing: If the quantity per carton is NOT indicated on IRS Form 2040, the contractor must determine quantity to be packed in the shipping container and must maintain that quantity through entire shipment. All shipments must be packed in UNIFORM quantities per carton*. Contractor must not deviate from these quantities.

All cartons must be packed solid with a maximum weight of 32 lbs per carton. Pack solid in corrugated or solid fiber shipping containers, bursting strength: 200 p.s.i, minimum. Carton bottoms may be glued, stapled, or sealed with polyester tape 51 mm to 76 mm (2 to 3") width, minimum 12kNm (65 lbs./inch) traverse tensile strength. If stapled, the cartons may only be stapled on the bottom and/or side; no staples are to be used on top. Cartons are to be sealed at the top with 51mm to 76mm (2 to 3") paper or polyester tape (not reinforced). Contractor will determine exact dimensions of carton in accordance with folded and/or trim size and weight of the product produced.

*In some cases where, there may be one carton with an odd quantity due to the quantity packed per carton not dividing equally into the quantity ordered. The label for that single carton MUST be labeled accurately with the carton quantity (see CARTON LABELING for electronically correcting label quantity). Place that odd carton at the top of the load.

CARTON LABELING: Contractor must reproduce shipping carton label at 100% on white paper from furnished PDF file, fill in appropriate fields and securely attach ONE LABEL TO THE END OF EACH CARTON. NOTE: Carton labels contain barcodes; therefore, dot matrix printing is NOT acceptable.

For palletized shipments, all cartons must have IRS Shipping label affixed to one carton end only (never top, long side, or bottom). On cartons shipped via small package carrier (SPC), affix the SPC label on top of carton on the end nearest to IRS label. On small package carrier (SPC) boxes/envelopes, the IRS label is to be affixed to the top of each package and the SPC shipping label to the reverse side of the package (this includes advance distributions and IRS samples). All shipments to IRS National Distribution Center via SPC are to leave "To (Consignee) Address" field blank. Correct labeling of shipping cartons, in strict accordance with the requirements of these specifications, is essential to the identification, distribution and warehousing activities of the IRS. Use of any other label is prohibited and may be cause for rejection of reimbursement for any expenses incurred to correct use of improper labels.

The following must be updated ELECTRONICALLY by the contractor, when not entered by IRS on the PDF label using Adobe Acrobat 7.0. DO NOT MAKE HAND-WRITTEN UPDATES TO THE LABEL UNDER ANY CIRCUMSTANCES.

--Carton # of #
--From Address
--To Address
--Carton Quantity

If requested, the contractor must send an electronic PDF proof of label prior to reproducing.

FAILURE OF THE CONTRACTOR TO THE PDF LABEL ELECTRONICALLY WILL RESULT IN THE SHIPMENT BEING REJECTED AND RE-LABELED AT THE CONTRACTOR'S EXPENSE.

*If a "0" is pre-filled in on the furnished PDF label, then contractor MUST change the "0" to reflect actual quantity inside cartons. Contractor must ensure that all cartons have the same quantity. The carton count field in the PDF file is directly linked to the barcode field. All changes to the carton count field MUST be made in the electronic label (not hand filled in) to whatever the true carton quantity is so that it is reflected on the label in both the quantity and barcode fields. NOTE: In the case of one carton with an odd quantity due to the quantity packed per carton not dividing equally into the quantity ordered, the label for that single carton must also be updated electronically to reflect the true quantity per carton.

**Automated "Carton # of #" fields: To print the correct number of labels for each address with sequential carton numbers, input in the total number of cartons and press "Print Labels" button. Warning: Once the print button is pressed, printing can not be canceled. Be sure all information is correct prior to printing labels.

PALLETS: All motor freight shipments require pallets.

Pallets for IRS consignments: Pallets must be type III and must conform to the Federal Specifications NN-P-71C, and any amendments thereto except for dimensions and single center stringer (see Exhibit B). Pallets must be 48" in length and 40" in width and must not exceed 5" in height. Full entry MUST be on the 40" width. **Strict adherence to these dimensions is necessary to accommodate storage requirements of IRS National Distribution Center.** Receipt of incorrect pallets may result in a charge for each incorrect pallet, which will be assessed against the contractor. This charge will cover additional costs incurred by IRS to repalletize the shipment onto correct pallets.

PALLETIZING: IRS has two different pallet specification requirements depending on the size of the form produced (see Exhibit B). Please note that the specifications for the pallets themselves are the same, only the manner in which

cartons are tiered/stacked change. Document 12321 (9 tier stacking method) will be used for STANDARD sized products, defined as follows:

1. Products that are 8" x 10-3/4" or 8-1/2" x 11";
2. Sizes that can be evenly divided into those sizes (8" x 10-3/4" or 8-1/2" x 11"); *and*
3. Are shipped in the standard double wide 11" x 17" carton.

Products that don't fit the above requirements will use Document 12321 (15 tier stacking method). Height of the pallets remain unchanged, but number of tiers and boxes per tier may be different based on cartons used.

Maximum height, including pallet, is 55" (see Exhibit B). Cartons must be fastened securely to the pallet in a manner that will prevent movement during transit but permit ready removal, without damage to the cartons, at destination. Do not use metal strapping or pallet caps for securing material on pallets. There must be no more than one partial pallet per destination.

PACKAGING AND PACKING PROBLEMS: In addition to other inspection procedures detailed elsewhere in these specifications, the contractor is responsible for correcting all packaging and packing problems (i.e. mislabeled cartons, IRS carton labels not being used or securely attached, cartons not being packed solid, incorrect pallets, or pallets not being layered right). The delivery will either be returned to the contractor to be corrected or the contractor may be billed by GPO for the amount that accrued in fixing the problem by an outside vendor.

"Mislabeling" means any error on the carton label, which incorrectly states or identifies the title of the form; the form identification number; or the quantity of forms actually contained in the carton, or has any missing information, or is not securely attached.

DEPARTMENTAL RANDOM COPIES (BLUE LABEL): The contractor MUST submit departmental random copies. The contractor must divide their entire order into equal sub lots. One random copy must be selected from a different general area of each sub lot. The contractor will be required to furnish the "Certificate of Selection of Random Copies", furnished by GPO, certifying that copies were selected as directed. The random copies constitute a part of the total quantity ordered, and no additional charge will be allowed.

Quantity Ordered	Number of Sublots
12,001 – 35,000	125
35,001 and over	200

These randomly selected copies must be packed separately and identified by a special Government furnished blue label (GPO Form 2678), affixed to each affected container. Labels are to be reproduced on blue stock. The container and its contents shall be recorded separately on all shipping documents and be sent separately from any other distribution to the destination specified.

A copy of the PRINT ORDER/SPECIFICATION and a signed Government-furnished certificate of selection, must be included.

DISTRIBUTION: All shipments are f.o.b. contractor's city. Complete addresses and quantities will be furnished with the print order.

Small Parcel Shipments: Upon award of the contract, the IRS will set up a small package carrier account for the contractor to use for shipments weighing between 1 to 750 pounds. NOTE: Contractor is cautioned that the small package carrier account number is for use under these specifications only.

All small package carrier shipments will be sent via GROUND service unless otherwise indicated on the print order. Contractor must not use their own small package carrier account.

Air Shipments: The contractor must contact the air carrier *prior* to palletization. This will alert them to any restrictions the designated airport may have, especially if it is a small airport with limited floor-weight capacity.

Bills of Lading: Contractor must request, and IRS will supply Bills of Lading for all shipments over 750 pounds. Contractor to provide IRS (originator of print order) with exact ship date, plant hours, number of boxes shipping to each destination, approximate weight of each box, and total number of skids. IRS must be notified in a timely manner so that GBLs may be cut and forwarded to the vendor in time to meet scheduled ship date (at least 2-3 days prior to shipment date).

Contractor will be required to complete variable information (including, but not limited to: total weight of shipment, number of containers, number of pallets) prior to shipment. The contractor will be held accountable to the IRS for all furnished GBLs. At the end of the contract term, all unused Bills of Lading must be returned to the Internal Revenue Service. Use of Bills of Lading for shipments not authorized by the IRS is strictly prohibited.

Government Bills of Lading or routing instructions will be furnished for most freight or express shipments. The Bills of Lading or routing instructions will have designated carriers that usually reflect special negotiated freight rates for IRS material. Contractor may not change designated carrier unless authorized by IRS. In the event that the designated carrier cannot be utilized, contractor must immediately contact the IRS to obtain alternate carrier authorization. If the contractor utilizes a carrier other than the designated carrier without prior IRS authorization, the contractor will be held responsible for any additional shipping costs incurred.

NOTE: The vendor cannot be reimbursed for using his or her own small parcel carrier account and/or BLs, nor may GPO GBLs be cut for this order.

The contractor must complete and email Form 2040 (see Page 7 in these specifications for additional information). When requested by the ordering agency, the contractor may be required to email or fax proof of shipment(s) reflecting the courier used, number of boxes, date shipped, etc.

Upon completion of each order, the contractor must return all Government furnished material. These materials must be packaged separately and returned under separate cover via traceable means. The contractor must be able to produce a separate signed receipt for these materials at any time during the contract.

All expenses incidental to picking up and returning Government furnished materials, proofs, contractor produced films, and furnishing samples must be borne by the contractor.

SCHEDULE: Contractor must not start production of any job prior to receipt of the individual print order (GPO Form 2511).

Contractor will be required to pick up furnished material at addresses in the metropolitan Atlanta, GA, and Rancho Cordova, CA areas. Complete address will be furnished at time notification of availability for pick-up is given to the contractor.

No definite schedule can be established at this time. The schedule begins upon notification of the availability of print order and furnished material. One of the two schedules will apply:

Accelerated Schedule: An occasional order may require shipment in 3 or 4 workdays. A premium payment of 7% will be applied on orders that require the Accelerated Schedule. While no guarantees can be made for future orders, approximately 5% of the total orders required the Accelerated Schedule in the previous contract year:

No more than two orders per day will be placed under the Accelerated Schedule.

Regular Schedule: Orders will require shipment in 5 to 19 workdays.

NOTE: AN OCCASIONAL ORDER MAY REQUIRE BOTH THE ACCELERATED SCHEDULE AND THE REGULAR SCHEDULE. THE CONTRACTOR WILL BE ALLOWED THE 7% PREMIUM PAYMENT ONLY

FOR THE QUANTITY DUE WITHIN 3 TO 4 WORKDAYS. **NO ADDITIONAL MAKEREADY CHARGE WILL BE ALLOWED FOR THE BALANCE.**

No more than two orders per day will require both the accelerated schedule and the regular schedule.

The "ship/deliver date" indicated on the print order is the date products ordered MUST be shipped via specified carrier.

Unscheduled material such as shipping documents, receipts or instructions, delivery lists, labels, etc., will be furnished with each order or shortly thereafter. In the event such information is not received in due time, the contractor will not be relieved of any responsibility in meeting the shipping schedule because of failure to request such information.

SECTION 3.- DETERMINATION OF AWARD

The Government will determine the lowest quote by applying the prices offered in the "Schedule of Prices" to the following units of production which are the estimated requirements to produce orders under this contract. These units do not constitute, nor are they to be construed as, a guarantee of the volume of work which may be ordered during the term of the contract.

The following item designations correspond to those listed in the "Schedule of Prices".

			(1)	(2)	(3)	(4)
I.	1.	(a)	13	5	13	2
		(b)	276	114	325	97
	2.	(a)	1	1	9	1
		(b)	5	2	225	2

		(1)	(2)	(3)	(4)
II.	(a)	65	47	299	12
	(b)	1	40	48	1
	(c)	xxx	xxx	1	xxx
	(d)	43	1	1	1
	(e)	168	1	8	30
	(f)	xxx	xxx	1	1
	(g)	1	66	73	1
	(h)	1	66	4	110
	(i)	1	1	68	20
	(j)	1	1	1	35
	(k)	xxx	xxx	1	xxx

III.	(a)	444
	(b)	1,188
	(c)	45
	(d)	1
	(e)	3,311

IV.	(a)	40
	(b)	1
	(c)	282
	(d)	1

SECTION 4.- SCHEDULE OF PRICES

GPO Atlanta Facsimile Number: (404)605-9185 or (404)605-9186

Quotes due by: 11:00 a.m. / Date: March 11, 2016

BIDDERS NAME AND SIGNATURE: Fill out and return* all the pages in "Section 4.- Schedule of Prices", initial each in the space provided.

Bidder_____

_____
(Address) (City) (State) (Zip)

_____
(Person to be Contacted) (Date) (State Code/Contractor's Code)

_____
(Telephone Number) (E-mail Address)

****

***You may FAX the Schedule of Prices pages to the above number, or you may mail to: GPO, Atlanta Regional Office, 3715 Northside Parkway NW, Suite 4-305, Atlanta, GA 30327.**

NOTE: TELEPHONE QUOTATIONS ARE NOT ACCEPTABLE.

****

PAYMENT TERMS:

Discounts are offered for payment as follows: _____ percent, _____ calendar days. See Article 9 "Discounts" of Solicitation Provisions in GPO Contract Terms (Pub. 310.2).

****

THIS SECTION FOR GPO USE ONLY

Certified by: _____ Date:_____
(Initials)

Contracting Officer:_____ Date:_____
(Initials)

****

Quotes offered are f.o.b. contractor's city.

Prices shall be all-inclusive, covering all materials and operations, for complete production in accordance with these specifications.

Bidder must make an entry in each of the spaces provided. Quotes submitted with any obliteration, revision, or alteration of the order and manner of submitting quotes may be declared nonresponsive.

An entry of NC (No Charge) shall be entered if bidder intends to furnish individual items at no charge to the Government.

Quotes submitted with NB (No Bid) or blank spaces for an item may be declared nonresponsive.

The Contracting Officer reserves the right to reject any offer that contains prices for individual items of production (whether or not such items are included in the Determination of Award) that are inconsistent or unrealistic in regard to other prices in the same offer or to GPO prices for the same operation if such action would be in the best interest of the Government.

All billing submitted to the GPO shall be based on the most economical method of production.

The contractor is cautioned not to perform any operation(s) or produce any product(s) for which a price has not been offered under the contract. Further, the contractor is not to accept print orders which are outside the scope of the contract. Any changes made to the print order MUST be confirmed in writing by the Contracting Officer, Atlanta GPO. If such orders are placed by the agency, and no Modification is received from the Atlanta GPO, the contractor is to notify GPO Atlanta immediately. Failure to do so may result in nonpayment.

Fractional parts of 100 or 1,000 will be prorated at the per 100 or 1,000 rate.

I. COMPLETE PRODUCT: Prices offered must include the cost of all required materials and operations necessary for the complete production and distribution of the product(s) listed in accordance with these specifications, with the exception of Items II, III, and IV.

	Format "A" (1)	Format "B" (2)	Format "C" (3)	Format "D" (4)
1. Printed one side only:				
(a) Makeready and setup charge	$_____	$_____	$_____	$_____
(b) Running, per 1,000 copies	$_____	$_____	$_____	$_____
2. Printed two sides:				
(a) Makeready and setup charge	$_____	$_____	$_____	$_____
(b) Running, per 1,000 copies	$_____	$_____	$_____	$_____

II. PAPER: Payment for all paper supplied by the contractor under the terms of these specifications, as ordered on the individual print orders, will be based on the net number of leaves furnished for the product(s) ordered. The cost of any paper required for makeready or running spoilage must be included in the prices offered.

Computation of the net number of leaves will be based on each page size leaf.

	Per 1,000 leaves			
	Format "A" (1)	Format "B" (2)	Format "C" (3)	Format "D" (4)
(a) White Offset Book (50 lb.) White Writing (20 lb.)	$_____	$_____	$_____	$_____
(b) Colored Offset Book (50 lb.) Colored Writing (20 lb.)	$_____	$_____	$_____	$_____
(c) Bright-Neon Color Text (20 lb. Writing or 50 lb. Offset Book)	$_xxx__	$_xxx__	$_____	$_xxx__

_____
(Initials)

(d) White Index (110 lb.) ..... $_____ $_____ $_____ $_____

(e) Colored Index (110 lb.) ..... $_____ $_____ $_____ $_____

(f) White Offset Book (60 lb.) ..... $_xxx__ $_xxx__ $_____ $_____

(g) White Carbonless Bond (CF or CB) (13 - 20 lb.) ..... $_____ $_____ $_____ $_____

(h) Colored Carbonless Bond (CF or CB) (13 - 20 lb.) ..... $_____ $_____ $_____ $_____

(i) White Carbonless Bond (CFB) (13 - 20 lb.) ..... $_____ $_____ $_____ $_____

(j) Colored Carbonless Bond (CFB) (13- 20 lb.) ..... $_____ $_____ $_____ $_____

(k) Colored Vellum-Bristol Cover (67 lb.) ..... $_xxx__ $_xxx__ $_____ $_xxx__

III. ADDITIONAL OPERATIONS:

(a) Collating multiple forms into sets, including edge bonding of carbonless sets ..... per 1,000 sheets ..... $_____

(b) Padding up to 100 sheets (assembling sheets into pads, stacking, gum or gum/crash, and slicing pads apart) ..... per pad ..... $_____

(c) Folding (continuous folds) ..... per 1,000 forms ..... $_____

(d) Banding with kraft paper bands (including corrugated cardboard front and back) ..... per band ..... $_____

(e) Wrapping or shrink-film packaging ..... per package ..... $_____

IV. PACKING AND SEALING FOR DISTRIBUTION: Prices offered must be all-inclusive, as applicable, and must include the cost of cushioned shipping bags, shipping containers, all necessary wrapping and packing materials, and labeling or marking, in accordance with these specifications.

(a) Quantities up to 12 lbs., in cushioned shipping bags, or wrapped in shipping bundles (maximum gross weight (14 lbs.) ..... each bag or bundle ..... $_____

(b) Quantities over 12 lbs. up to 24 lbs., wrapped in shipping bundles, or packed in shipping containers, at contractor's option (maximum gross weight 27 lbs.) ..... each bundle or container ..... $_____

(c) Packing and sealing shipping containers (up to approximately 32 lbs. capacity) ..... each container ..... $_____

(d) Palletizing ..... each pallet ..... $_____

_____
(Initials)

EXHIBIT A

Read Prior to Producing or Labeling Cartons

Labels MUST be generated from the PDF file provided. Handwritten updates are not allowed on any label. If these instructions are not followed, the Contractor will be held responsible for all re-labeling charges.

Section I – Prior to Producing Label

1) **Contact the IRS for a new carton label** if any of the following fields are blank when the label is received: (a) Catalog number, (b) Revision, (c) Requisition number, (d) Product number, or (e) Product title.

2) **Fields for Contractor to Update Electronically:** (a) Carton # of # *(see number Section I, 3 below)*; (b) From address; (c) To address *(see exception under Section II, 2, Cartons via Small Package Carrier (SPC) below)*; and (d) Carton quantity *(if carton quantity is blank, it must be updated with the correct packing quantity).*

3) **Automated Carton # of # fields:** To print the correct number of labels for each address with sequential carton numbers, input the total number of cartons in second # field and press "Print Labels" button. **Warning: Once the print button is pressed, printing cannot be canceled. Be sure all information is correct prior to printing.**

4) **Printing:** Labels must be produced same-size in black ink on white paper.

5) **Proof:** An electronic proof of the label may be required if indicated on the contract or print order.

Section II – Labeling for Shipment

1) **Cartons:** All cartons must have IRS shipping label affixed to one end of the carton only (never on top, long-side, or bottom).

2) **Cartons via Small Package Carrier (SPC):** Affix SPC label to top of carton on edge nearest to IRS label. If shipping via SPC to the IRS National Distribution Center, leave the "To (Consignee)" address field blank.

3) **Small SPC packages/boxes/envelopes via SPC:** Affix IRS label to front of package and SPC label to the back. This includes advance distributions and IRS samples.

cut here ---------- *cut here*

Phaser 7300DX - Room 6231 | Print Labels | SAVE AS | RESET

Carton Shipping Label

Department of the Treasury **Internal Revenue Service**	Publishing analyst	Phone number	Carton #	of # 1
GPO Jacket number	Print order number	Program number		
From *(Contractor name and address)*		To *(Consignee)*		
Catalog number **62724N**	Revision *(YYYY-MM-DD)*	*62724N*		
Product number *(Form, Document, Publication, etc)*		Product title		
Carton quantity	Requisition number *(YY-nnnnn)*			

Form **6153** (Rev. 3-2006) Catalog Number 62724N Department of Treasury - Internal Revenue Service

Phaser 7300DX - Room 6231 | Print Labels | SAVE AS | RESET

IRS Pallet Specifications

All shipments delivered to the National Distribution Center (NDC), must conform to the specifications outlined in this document.

Pallet Measurements

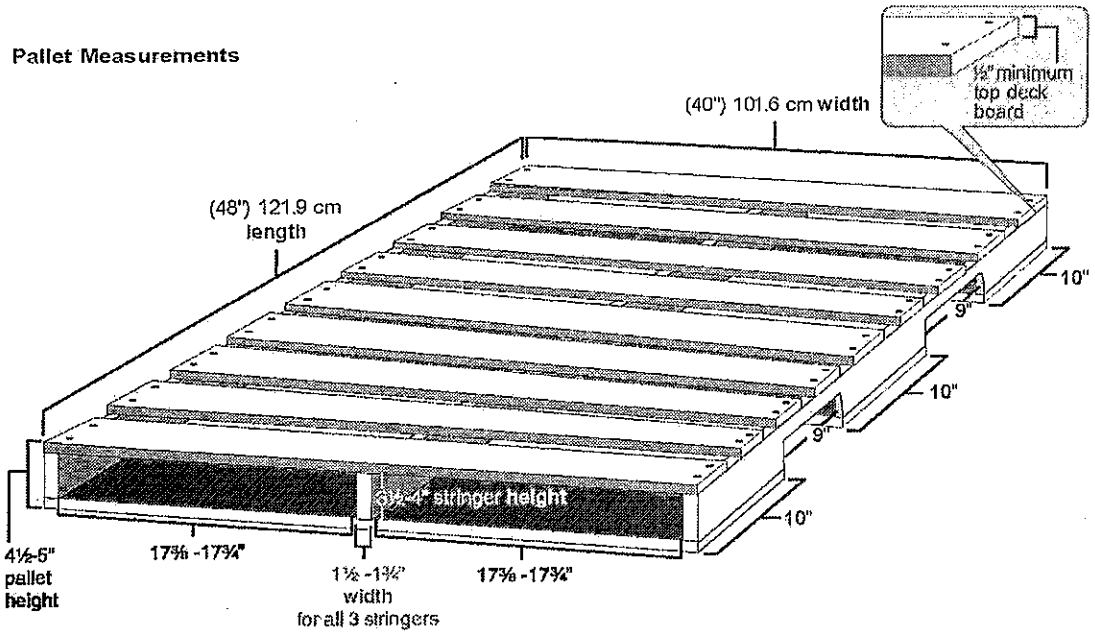

Stacked Pallet Height

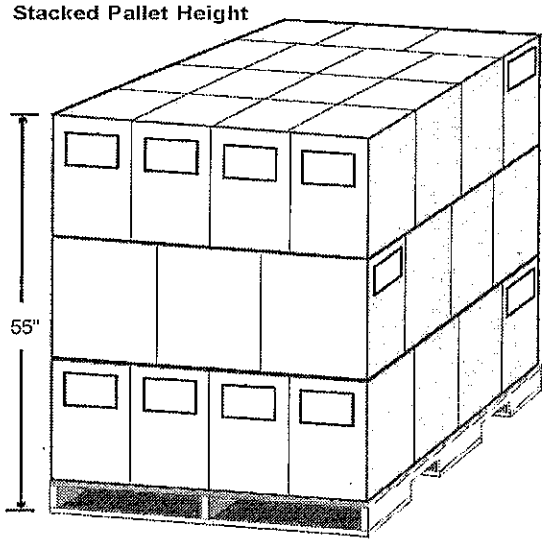

For IRS products the maximum full pallet height (pallet + cartons) **must not** exceed 55".

15 tier stacking method

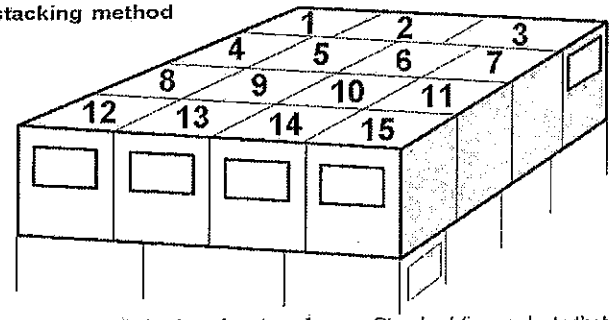

Shipments requiring palletization of cartons for non-Standard (i.e products that are not and can not be folded down to an 8.5 x 11 size without destroying the functionality or integrity of the product) IRS products should be stacked using this 15 tier method.

9 tier stacking method

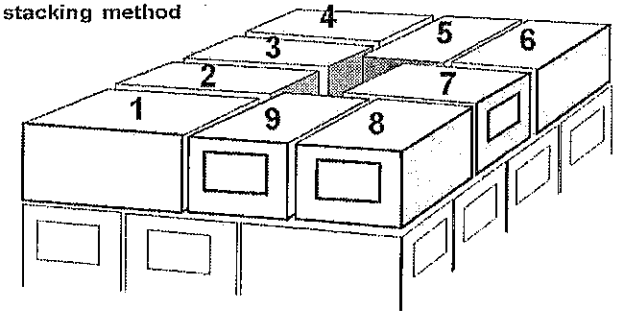

Products that are 8.5 x 11 or can be folded to those dimensions are considered standard IRS products and should be stacked using this 9 tier method.

Document 12321 (Rev. 1-2013) Catalog Number 47403N Department of the Treasury Internal Revenue Service publish.no.irs.gov

EXHIBIT B

EXHIBIT C

Packing Requirements for Standard IRS Stuffers

Standard Stuffers:

The standard stuffer (8-1/2" x 3-2/3") shall be packed in bundles:

1. With all the inserts facing the same way;
2. With corrugated cardboard on the top and bottom; (the open sides will permit the user to determine the direc tion of the stuffers when preparing for use in the automated equipment);

   Specifications for corrugated cardboard: Corrugated mailing board, 900 x 1145mm (35" x 45"), plus or minus 3 mm(1/8"), double faced, kraft or chip. Bursting strength, average, not less than 420 kPa (60lb/in^2); thickness of corrugating medium, average, 0.3mm (0.009"); nominal thickness of finished board, 3mm (1/8"). Cut corrugated cardboard with "rib" long to better enforce packaging.
3. No higher than three and one-half inches (3-1/2") tall (after being compressed for banding);
4. Banded in the center of the stack with plain kraft paper (non-adhesive) three inches (3") wide;
5. With kraft band secured with some type of adhesive of tape that does not come in contact with the stuffers in any way;
6. Packed securely in cartons to avoid shifting;
7. With all units banded in consistent multiples of 25 (ex: 25, 50, 100 etc.);

NOTE: Do NOT use shrink wrap, plastic wrap, or enclose the stuffer bundles in any way.

To facilitate carton packing, three to five individually banded bundles may be wrapped together with a one layer band of three inch (3") plain kraft paper, secured in the same way as the individual bundles.

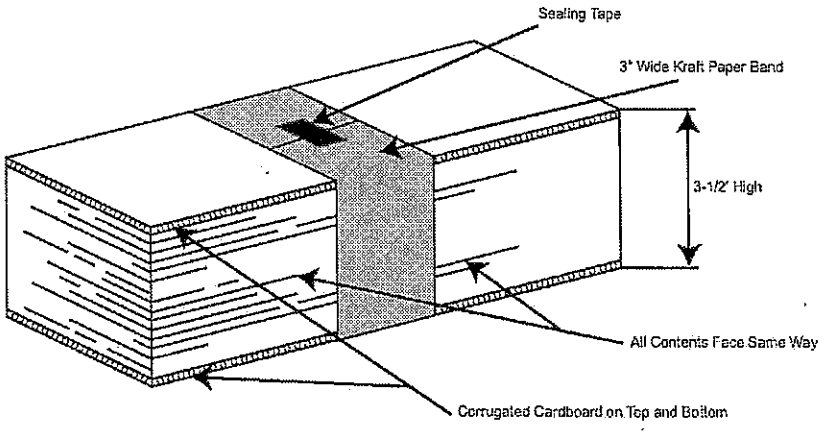

Shipping Status: ☐ Start ☐ Partial ☐ Complete Instructions **Final**

Distribution / Shipping List

Save PDF

Requisition number	Jacket number	Print order number	Originator symbols	Contractor code	Date	NPC INC.
2006-NO-09003	523-093	45145	W:CAS:SP:IMF1	370-64115	06-01-2006	814-239-8787

Item (Form, Document, Publication, Notice etc.)	Catalog number	Revision date	Ship date	OLD ROUTE 220/P.O. BOX 373
F 6001	27865 X	03/2006 ☒ Reprint ☐ Revison	06/08/2006 ☒ FOB contractor city ☐ FOB destination	CLAYSBURG, PA 16625

Printing specialist	Phone number	Distribution analyst	Phone number	Carton quantity	Weight factor	Quantities stated below are
Hess, Lucy	678-547-3675	Temple, Ausma	859-669-3146	0	0.01	☒ each ☐ pads ☐ sheets ☐ sets ☐ rolls

Title/Description
Letter 0012C- Correspondence Action Sheet (CAS)

Remarks

Contractor must electronically update 2040 and shipping labels to inclue electronically changing the "0" in the quantity box of the shipping label to accurately reflect the quantity contained in the shipping carton

OPN	IRS Centers	Order Quantity	Ship Quantity	Date Shipped
29245-1424	IRS/AUSTIN SUBMISSION PROC CTR WHSE UNIT STOP 1475AUSC 2021 WOODWARD ST AUSTIN, TX 78741-7805	200000		
31616-1200	IRS/HOLLINS BLDG STE 201 MEDIA & PUBS ATLANTA STP 061-N 2970 BRANDYWINE RD CHAMBLEE, GA 30341-5528	10		
39645-1424	IRS/ATLANTA SUB PROCESSING CTR ATSC OFFSITE WAREHOUSE GHS ST 2650 BUTTON GWINNETT DR DORAVILLE, GA 30340-1500	75000		
49845-1424	IRS/ANDOVER OFFSITE WAREHOUSE # 377 377 BALLARDVALE ST WILMINGTON, MA 01887-1042	25000		
	Grand Total	300010		

EXHIBIT D