BIDS SHALL BE PUBLICLY OPENED AT 11:00 A.M., PREVAILING WASHINGTON, D.C. TIME, ON DECEMBER 19, 2016.

IF YOU HAVE ANY QUESTIONS CONCERNING THESE SPECIFICATIONS CALL (202) 512-1239 AND ASK FOR DALTON EVERETT (DC TEAM #2). NO COLLECT CALLS.

BID SPECIFICATIONS - U.S. Government Publishing Office (GPO), Washington, D.C.

GPO CONTRACT TERMS: Any contract which results from this Invitation for Bid will be subject to GPO Contract Terms (GPO Publication 310.2, effective December 1, 1987 (Rev. 6-01)) and Quality Assurance Through Attributes Program for Printing and Binding (GPO Publication 310.1, effective May 1979 (Rev8-02)).

"DISPUTES: GPO Publication 310.2, GPO Contract Terms, Contract Clause 5. Disputes, is hereby replaced with the June 2008 clause found at www.gpo.gov/pdfs/vendors/contractdisputes.pdf.

CAUTION: The forms printed under this contract must not be mixed with forms printed under any other contract.

SPECIFICATIONS FOR CONTRACT PRINTING OF TAX INSTRUCTION 1040 FULL CARTONS SHIPPING DIRECTLY TO TAC & TFOP FOR TAX YEAR 2016

Table of Contents

Section 1 - SCHEDULE
1.1 Preaward Test
1.2 Preproduction Conference
1.3 Inspection Notification
1.4 Daily Production Report
1.5 Electronic Distribution Shipping Report (Form 2040)

Section 2 - MATERIALS
2.1 Furnished by the Government
2.2 Furnished by the Contractor
2.3 JCP Standards
2.4 Postage Statements/IRS Postal Forms

Section 3 - PAMPHLET SPECIFICATIONS
3.1 Item
3.2 Estimated Quantity
3.3 Trim Size
3.4 Number of Pages
3.5 Printing
3.6 Binding
3.7 Margins
3.8 GPO Imprint Line
3.9 Electronic Proofs

Section 4 – PACKING/CARTONS/LABELING
4.1 Packing
4.2 Cartons
4.3 Labeling and Marking
4.4 Copies Damaged in Transit
4.5 Pallets

Section 5 - DISTRIBUTION
5.1 Domestic Mail (DM)
5.2 Small Package Carrier (SPC)
5.3 Motor Freight (MF)
5.4 Air Shipment (if required)
5.5 Blue Label Copies

Section 6 - QUALITY ASSURANCE
6.1 Quality Assurance Levels and Standards
6.2 Compliance

Section 7 – PRODUCTION SAMPLES

Section 8 – OFFERS (BIDS)

EXHIBITS
Exhibit 1 – ELITE Core Record Layout
Exhibit 2 – Sample of UPS Label
Exhibit 3 – USPS Parcel Select
Exhibit 4 – UPS Email
Exhibit 5 – Quality Inspection Notification
Exhibit 6 – Production and Mailing Report
Exhibit 7 - IRS Publishing Postage Report
Exhibit 8 – Electronic Distribution/Shipping List
Exhibit 9 – IRS Carton Label
Exhibit 10 – IRS Pallet Specs
Exhibit 11 – Drop Shipment Plan
Exhibit 12 – Drop Shipment Schedule
Exhibit 13 – Postage Statement – Package Services

SCOPE: These specifications cover the printing and binding of approx. 1,728,976 (including 200 Blue Labels) self-covered pamphlets containing approx.108 pages. These pamphlets will mail/ship to approx. 4,760 destinations that will require packing into approx. 19,645 cartons, and include creating address/mail labels, addressing, labeling and sealing cartons, palletizing, storing; staging, and mailing/shipping via Parcel Select (drop shipments), Small Package Carrier (SPC), and Motor Freight.

CHANGES IN QUANTITY: The Government, for the FINAL IRS QUANTITY, may submit increases or decreases of up to 30% of the total estimated quantity until the date specified in the schedule listed below under "Government Furnished Materials". These quantity adjustments may be made via email and will be the FINAL quantity. These adjustments will not change the scheduled turnover dates. Billing adjustments for scheduled quantity changes (+ or -) will be at the contractor's quoted "ADDITIONAL RATE". If no changes have been received by the scheduled date for final quantity adjustments, the bid quantities will stand as the FINAL contract quantity.

CHANGES IN PAGE COUNTS: Pages counts may vary when the print files are received. The contractor must submit a price per thousand that the Government can decrease/increase the purchase order price by for each Item based on the final page counts and final quantities. See Offers Sections 8.2 and 8.2.1.

NOTE: Must be full **Final** Quantity to all consignees. **No** shortages will be allowed. However, the Government reserves the right to accept or reject overages.

Section 1 - SCHEDULE

Date	Event
12-19-2016	Bid Opening
12-20-2016	Purchase Order and camera copy for Blue label.

NOTE: Immediately upon award contractor must notify Mary Morrison at Mary.E.Morrison@irs.gov to provide two (2) or less email addresses for the IRS electronic files to be furnished.

Negotiated	If required, Preproduction Conference must be held by contractor via telephone conference.
12-27-2016	Final distribution list (IRS Form 2040) and one .csv address file to contractor via email (final quantity).
12-27-2016	Pdf print repro for Instrs.1040 to contractor via email.
01-03-2017	Drop Shipment Plan due from contractor
01-13-2017	Start to ship date. If authorized by the Government, contractor may start to ship earlier.
01-20-2017	Ship complete date. If authorized by the Government, contractor may ship complete earlier.

The Government will attempt to meet the schedules as stated in these specifications. However, uncontrollable circumstances such as Congressional Legislation may delay the furnishing of printing media. In such event, the schedule will be adjusted in accordance with contract terms.

Unscheduled material such as shipping documents, receipts or instructions, delivery lists, labels, etc., will be furnished per the "Schedule" or shortly thereafter. In the event such information is not received in due time, the contractor will not be relieved of any responsibility in meeting the shipping schedule because of failure to request such information.

1.1PREAWARD TEST: In order to verify that the apparent lowest responsive responsible vendor has the capability to produce contractor created SC and DM labels, and email notifications per the contract specifications, the IRS may furnish a .csv-distribution test file via email consisting of approximately 10 sample addresses. Within one (1) workday after receipt of test files, the vendor must email the test samples in the appropriate mailing/shipping label format required per the specifications, and similar to what is shown in **Exhibits 2 (Small Package Carrier) and 3 (Parcel Select)**, to Mary.E.Morrison@irs.gov.
In addition to the mailing/shipping labels, when an email address appears in the test file and a contractor created SC label is required, an email notification of the shipment to the email listed must be submitted simultaneously with mailing/shipping labels for approval. **See Exhibit 4.** The apparent lowest responsive responsible vendor will receive an approval/rejection of the

test samples and email notifications via email within one (1) workday after received by the Government. If samples and/or email notifications are rejected, vendor must make all required changes and resubmit samples and/or email notifications to Mary.E.Morrison@irs.gov for approval within one (1) workday. **If the apparent lowest responsive responsible vendor does not satisfactorily complete the pre-award test in the timeframe above, the vendor will be deemed non-responsible.**

NOTE: At Government's option, the preaward test may be waived if the apparent lowest responsive bidder has previously provided approved samples and email notifications under a separate contract.

1.2 PREPRODUCTION CONFERENCE: If required by the Government, a preproduction conference will be held as indicated in the schedule previously cited. The purpose of the conference will be to discuss and review all aspects of the contractor's internal and external operations required to complete this contract. The contractor will conduct this preproduction conference and items to be discussed are:

1) Processing and sorting electronic distribution file
2) Scheduled start-up dates for all phases of production
3) Coordination/communication from one production phase to another
4) Who will be responsible for each phase
5) How will subcontractors be involved and kept informed (if applicable)
6) Specific production dates of all subcontractors (if applicable)
7) How the product will be staged and mailed/shipped
8) Any other special requirements which are specific to this

Attending the conference will be representative(s) from the Internal Revenue Service and possibly representative(s) from the Government Publishing Office. To establish coordination of all required operations, a representative from all subcontractors involved must be present as well as representatives from each involved production area for the primary contractor.

1.3 INSPECTION NOTIFICATION: Seventy-two (72) hours prior to press and binding the contractor must e-mail to Mary.E.Morrison@irs.gov. Form 9558 "Quality Inspection Notification" **(see Exhibit 5)** with the following information:

1) Jacket and Requisition Number
2) Name of company
3) Location and address of inspection site
4) Name and phone number of contact person
5) Date and time of inspection

Whether IRS elects to be present for the inspection, or waive the inspection, you will be notified at least 24 hours prior to the time for inspection. If IRS fails to respond, proceed as you would have, had there not been an inspection. If the press inspection is waived, contractor must send 5 press sheet samples overnight, and via traceable means to IRS, SE:W:CAR:MP:P:TP:CD Attn: Mary Morrison (202) 317-3425, 1111 Constitution Ave., NW, Washington, DC. Attendance at, or waiver of, the inspection does not affect any other provisions of the contract. Contractor must not hold up production unless specifically authorized by the GPO.

1.4 DAILY PRODUCTION REPORT: Contractor must provide daily production information on Form 9659 "Production and Mailing Report" (**see Exhibit 6**) and email Form 9659 each workday, by 12:00pm (EST), to Mary.E.Morrison@irs.gov.

1.5 ELECTRONIC DISTRIBUTION/SHIPPING REPORT (Form 2040): Distribution/Shipping List is used for larger shipment address information, shipping verification and for the purpose of updating IRS' databases and to inform destinations of the shipping and quantity status.

The contractor MUST update the Electronic Form 2040 and transmit via email to IRS, every day the product ships, on a computer using a "full version" of Adobe Acrobat 9.0 Professional (or more recent) software. Daily report is to show only current shipment and is not cumulative. Any delay or missed input could result in delay of payment. The contractor must update the Shipping Status, Ship Quantity and Date Shipped fields with their information as per instructions included in Form 2040 PDF. A PDF copy of must also be emailed to Mary.E.Morrison@irs.gov. If there is any information missing or incorrect, please contact Mary Morrison at Mary.E.Morrison@irs.gov.

SECTION 2 – MATERIALS

2.1 FURNISHED BY THE GOVERNMENT:

Print pdf with fonts embedded for face and back form generated from Adobe Acrobat 9.0 or later via email. DO NOT UNEMBED FONTS. This may result in loss of data. The pdf is backward compatible to Adobe Acrobat 8.0.

One (1) distribution file (1-TF addresses) created in a comma delimited (.csv) format via email. The contractor must import text from various areas within the file into their own software program to create mailing/shipping address labels required for this contract. The files will contain account number, recipient's name, complete address, telephone number (if furnished) and **suggested** transportation mode for each destination. The transportation modes will consist of Domestic Mail (DM), Small Package Carrier (SC), Motor Freight (MF---if required), and Air Freight (AF—if required). **See Exhibit 1**.

IRS fillable pdf Forms 9558 (Quality Inspection Notification), 9659 (Production and Mailing Report), and Form 13456 (Publishing Postage Report) will be emailed to the contractor shortly after award. **See Exhibits 5, 6, and 7**.

IRS fillable Form 2040 (Electronic Distribution/Shipping Report) will be emailed to the contractor by the date cited in the "Schedule". **See Exhibit 8**.

USPS Form 3615 (Mailing Permit Application and Customer Profile) will be furnished if this form is not currently on file with the Post Office the contractor will use.

IRS G-48 "Postage & Fees Paid" mailing indicia via email.

If required, IRS Form 6153 (Bulk Carton Label----**see Exhibit 9**) and Internal Revenue Bills of Lading (IRBL) will be furnished to the contractor via email.

Small Package Carrier (SPC) IRS Account Number will be furnished to the contractor if the contractor does not have an IRS Account Number established and currently active. **Contractor must only use this account number for the shipping of IRS copies.**

2.2 FURNISHED BY CONTRACTOR: All materials and operations, other than those listed under "GOVERNMENT TO FURNISH", necessary to produce the product in accordance with these specifications.

Intelligent Mail package barcode (IMpb): Contractor must be an approved USPS Full Service Intelligent Mail package barcode (IMpb) provider. Contractor must meet all IMpb preparation and postage documentation requirements as required in the Domestic Mail Manual at time of mailing. **All mail must be presented under the contractor obtained Mailer ID (no exceptions).** Contractor must sort mail to effectively maximize all USPS eligible discounts.

Prior to image processing, the contractor is responsible for checking files to insure that such features as bleeds, register marks, and correct file output selection have been provided for, so as to correctly output for printing. The contractor must supply all necessary trapping. High- resolution image processors must be used if generating films.

For completing all required IRS fillable forms, contractor must have Internet access provided through an Internet Service Provider (ISP), an email account and a web browser equivalent to Internet Explorer 6.0. In addition, contractor must have "full version" of Adobe Acrobat 9.0 Professional (or more recent) software. **NOTE:** The use of public address or web-based mail servers (i.e. Hotmail, Yahoo, etc.) is not allowed.

2.3 JCP STANDARDS: The specifications of all papers furnished must be in accordance with those listed herein or listed for the corresponding JCP Code numbers in the "Government Paper Specification Standards No. 12" dated March 2011.

White or Natural (MUST be light shade) Newsprint, basis weight: 28lbs. per 500 sheets, "24 x 36", must equal JCP Code A10. **All text paper used within a single copy must be of uniform shade**. In addition, the weight of the newsprint paper must remain constant throughout the entire run for all items.

2.4 POSTAGE STATEMENT/IRS POSTAL FORMS: The contractor must complete and submit via email a portable document file (PDF) to the IRS within three (3) workdays after the final turnover of mail packages to the USPS. The PDF should be sent in a single email when possible and the total file size of the e-mail must be less than 10 MB. If the email size exceeds 10 MB, then multiple emails must be used. Form 13456 is provided as a fillable PDF file. The IRS will complete the

fields, in the "IRS Use Only" section of the form prior to e-mailing the form to the contractor. If there is any information missing or incorrect, please contact Mary Morrison at Mary.E.Morrison@irs.gov.
The PDF submitted to the IRS must contain Form 13456 and all related postal paperwork that has been combined into a single PDF. Scanning Form 13456 is NOT ALLOWED. Please fill out the provided PDF file for Form 13456, add the postal paperwork (which can be scanned) to the PDF file, save it and submit it to IRS.

The contractor must complete Form 13456 per the supplied instructions on the form and enter accurate information in the following fields: Name of contractor, Contact person at contractor, Telephone number of contact person, e-mail of contact person, Number of pages in the combined email, Date the email was sent, and the Wave/Phase Number (if applicable). The Wave/Phase number is used to show the number of mailings in the event of staggered shipments for one requisition. In addition, the contractor is responsible for capturing six (6) data elements from every postage statement (i.e. USPS Form 3602, 3602-R, 3600) and entering this information in the appropriate places on Form 13456. The six (6) elements are: (1) Zip Code of Post Office used for mailing, (2) Date on Postage Statement, (3) Pieces Mailed, (4) Copies Mailed, (5) Postage Amount, and (6) Postage Statement Type. **See Exhibit 7.**

Prior to emailing the combined PDF file, the contractor must rename the file. The file must be named using 9 digits of the Requisition Number, Post Office Zip Code, (first) Mailing Date, (last) Mailing Statement Date and .pdf (see below). In the event that both mailing statement dates are the same, the first and last dates in the file name can also be the same.

Examples: For requisition number 2010-12345, the file name will be: 2010-12345_16625_01-02-10_01-15-10.pdf

If the file size is 10MB or larger, the contractor must create multiple PDF files and add a suffix to the file name starting with the letter "a" then "b", etc. (i.e. 2017-12345_16625_01-02-10_01-02-17a.pdf). The contractor is also responsible for the accuracy of the information returned to the IRS. Any delay or missing data could result in a delay of payment.

• All Postage Statements (i.e. USPS Forms 3600s, 3602s, 3605s and USPS Form 8125, PVDS) **must contain the IRS Agency Cost Code "67039"** in the "Federal Agency Cost Code "box. The GPO Jacket Number must be included in the mailer information located in the upper portion of the postage statement. **See Exhibit 13.**

The email must contain only Form 13456 and associated postage statements for the designated requisition number. Contractor must not combine postage associated with multiple print order/requisition numbers in a single email transmission. The PDF must be emailed to postage@publish.no.irs.gov., and Mary.E.Morrison@irs.gov.

SECTION 3 – PAMPHLET SPECIFICATIONS---

3.1 ITEM: Instruction 1040 (Rev. 2016) -- Direct Shipment Distribution

3.2 QUANTITY (estimated): Approximately 1,728,976 (including 200 blue labels) IRS copies**.**

3.3 TRIM SIZE: 8-1/4" x 10-7/8"

3.4 NUMBER OF PAGES: The page count of 108 pages is approximate and subject to change. See SECTION 8 "OFFERS" (BIDS).

3.5 PRINTING: Print head-to-head, in Black ink. Halftones may be scattered throughout and must be 110-line screen or finer.

3.6 BINDING : Saddle-wire stitch in two (2) places on the 10-7/8" left side and trim three (3) sides. At contractor's option, single leaves connected with a lip (i.e., binding stub) to the left or right side of stitches will be allowed provided the lip does not extend past the bind margins of the adjacent pages. At contractor's option paste-on-fold is acceptable.

3.7 MARGINS: ½" head unless otherwise indicated of PDF provided; center left and right.

3.8 GPO IMPRINT LINE: Contractor must set and insert a GPO imprint line on each form, per GPO Pub. 310.2 (page 9). Identification markings such as register marks, commercial identification marks of any kind, etc., except GPO imprint, form number, and revision date, carried in the electronic files, must not print on finished product.

3.9 ELECTRONIC PROOFS: Contractor must email one (1) set of electronic page proofs to Mary.E.Morrison@irs.gov as soon as the contractor deems necessary in order to comply with the shipping schedule in the contract. Email must

include the Jacket and Requisition Number. Electronic proofs must indicate margins, final trim size, and include all images in proper positions. Proofs will be evaluated for image position, pagination, and trim size. In addition, contractor must call GPO Contract Compliance Section at (202) 512-0520 immediately upon emailing proofs to the IRS and upon receiving the "OK TO PROCEED" email back from the IRS. CONTRACTOR MUST NOT PRINT PRIOR TO RECEIVING AN "OK TO PROCEED". Proofs will be withheld not more than one (1) workday from receipt in the IRS to receipt via email in the contractor's plant.

SECTION 4 – PACKING/CARTONS/LABELING/ADDRESSING/PALLETIZING FOR IRS COPIES:

4.1 PACKING: Pack approximately 1,728,960 total copies into approx. 19,645 cartons, in quantities of 88 copies per carton to approx. 4,760 destinations. Each carton must contain two even stacks of 44 copies and one (1) full sheet of cardboard covering the entire top of the two even stacks prior to being sealed. Forms must be packed so they are not damaged during transit.

4.2 CARTONS: Cartons must be corrugated or solid fiber shipping containers, 1380 kPa (200 psi) minimum bursting strength and minimum edge crush strength of 35 psi. Bottom flaps must be glued, stapled, or sealed with polyester tape 2 to 3" width, minimum 12 kNm (65 lbs./inch) transverse tensile strength). If bottom flaps are stapled, they must be stapled before packing and without damage to the product enclosed. Top flaps of cartons must be securely sealed at top with 2 to 3" paper or polyester tape (not reinforced). Cartons must be packed solid. Cartons must not have excessive air space (dunnage) when fully packed to prevent crushing or deformation. Cartons must not open nor split during transit through the small package/motor freight/airfreight carrier delivery systems.

Stapling of top flaps on cartons, furnishing cartons with separate lids, overstuffing or crowning cartons, and sealing cartons with plastic strapping is strictly prohibited.

Cartons must be packed solid and not exceed 32lbs when fully packed and sealed. Carton filler (if necessary) must be composed of material that can be easily removed without damaging contents. Packing peanuts or beads are strictly prohibited. Contractor must determine exact dimensions of carton in accordance with the trim size and weight of product produced. **The exterior dimensions of all cartons must not exceed 17-1/2" (L) x 11-1/2" (W) x 8" (D).**

4.3 LABELING/MARKING: If motor freight shipments are required, EACH carton must contain an IRS carton label Form 6153 (**see Exhibit 9**) generated from the provided pdf. Handwritten labels are strictly prohibited. Contractor is required to produce the appropriate number of IRS carton labels needed for this contract on white paper or white adhesive label stock, in black ink, and reproduced the same size as the pdf provided. The completed IRS carton label must be affixed securely to one end of the carton only (never on top, long-side, or bottom). The IRS carton label MUST NEVER be affixed such that it extends over the edge and onto an adjacent side.

For all IRS carton labels (Form 6153), the contractor is required to update/enter the Carton # of # for each address; the "To (Consignee---complete address)"; and the "From---contractor's address," fields electronically in black ink, and minimum 12pt type. If the remaining fields on the furnished IRS carton label are blank, or the quantity stated on the carton label is not the same quantity being packed within the carton, the contractor must notify Mary Morrison at Mary.E.Morrison@irs.gov to resolve the discrepancy prior to packing.

Small Package Carrier (SPC) Labeling: A contractor created SPC label must be securely affixed to EACH carton shipping via SPC. The SPC label must be affixed securely to one end of the carton only (never on top, long-side, or bottom). The SPC carton label MUST NEVER be affixed such that it extends over the edge and onto an adjacent side.

Currently, IRS uses UPS as the Small Package Carrier. Contractor **MUST** generate UPS shipping labels electronically. It is the responsibility of the contractor to be familiar with electronic shipping methods via UPS. There are many ways to generate electronic shipping labels, either through a UPS shipping system (UPS WorldShip System or UPS Internet Shipping), or a 3rd Party Shipping Software (Pitney Bowes Shipping Software, etc.).

From the furnished distribution (.csv) files, the contractor must image/print approximately fourteen (14) lines, in black ink, on each SPC label. Imaging/Printing on each SPC label consist of: recipient's account number (i.e. TF 123456A); recipient's name; recipient's complete address; recipient's 10-digit telephone number (if supplied); Bloomington, IL return address; and four (4) reference lines at bottom of SPC label. **See Exhibit 2 for similar format**.

Contractor must image/print in black ink the following return address on all contractor created **UPS and USPS** labels:

Internal Revenue Service
National Distribution Center
1201 N. Mitsubishi Motorway
Bloomington, IL 61705-6613.

Imaging/Printing of UPS labels must meet all UPS requirements and regulations at time of shipping.

UPS shipping systems provides four (4) reference fields that are required to be imaged or printed in black ink on each label created by the contractor. Reference fields 1, 2, and 4 below must be imaged or printed in black ink, minimum 12pt type. **Reference field 3 below must be imaged or printed in 18 pt. boldface type.**

1. Reference Field 1: IRS requisition number and GPO jacket number (i.e. 17-00341/397-907
2. Reference Field 2: Program Account Number (i.e. TF123456A)
3. Reference Field 3: **INST. 1040**
4. Reference Field 4: Quantity 108

Parcel Select Labeling: A contractor created Parcel Select label must be securely affixed to EACH carton mailing via USPS. The label must be affixed to one end of the carton (never on top, long-sides, or bottom).

In addition to the "Postage and Fees" mailing indicia, the contractor must image/print approximately thirteen (13) lines from the furnished distribution (.csv) files in black ink, minimum 12pt type, on each USPS label. Imaging/Printing on each USPS label consist of: recipient's account number (i.e. TF 123456A); recipient's name and complete address; Intelligent Mail parcel barcode (IMpb) created by the contractor per the Domestic Mail Manual (DMM) requirements at time of mailing; Bloomington, IL return address; Penalty for Private Use $300; and three (3) reference fields at bottom of the mailing label. **See Exhibit 3 for similar format**. The three (3) reference fields required at the bottom of each mailing label are:

1. Reference Field 1: IRS requisition number and GPO jacket number (i.e. 17-00341/397-907
2. Reference Field 2: TFOP
3. Reference Field 3: Instruction 1040

Caution: In the event that cartons are mislabeled, incorrect carton labels and/or incorrect pallets are utilized, cartons are crushing, collapsing, or bursting due to the cartons not being packed per contract, labels are not securely affixed to the cartons/pallets or labels are affixed to the incorrect area of the cartons/pallets, cartons are not layered correctly on the pallets, pallets are not wrapped properly and securely, the shipment will either be returned to the contractor to be corrected/replaced or the contractor will be required to make the corrections/replacements on site, with all costs borne by the contractor. Contractor must make all corrections and/or replace all damaged materials within 24 hours of notification via email. If the corrections and or replacements are not completed by the contractor within 24 hours of notification, the Government will hire an outside vendor to make all corrections and/or replacements (except printed product contained within cartons) and the contractor will borne all costs incurred by the Government.

IF pallets are required, and in addition to a completed IRS Form 6153 being applied to each carton, contractor must securely affix a completed IRS carton label to all four sides of the stretch wrap and to the top of each pallet. In addition, the labels affixed to cartons on pallets must be facing out to be easily read, once palletized.

4.4 <u>COPIES DAMAGED IN TRANSIT:</u> CONTRACTOR MUST REPLACE AND SHIP/MAIL ALL FORMS DAMAGED IN TRANSIT WITHIN 24 HOURS OF DEFICIENCY NOTIFICATION, VIA OVERNIGHT DELIVERY. CONTRACTOR WILL BE NOTIFIED OF THE DEFICIENCY VIA EMAIL. CONTRACTOR WILL INCUR ALL CHARGES TO REPLACE AND SHIP/MAIL DAMAGED COPIES.

4.5 <u>PALLETS:</u> All shipments to a single destination weighing more than 750lbs., require pallets. Pallets must be type III and must conform to Federal Specifications NN-P-71C, and any amendments applicable except for dimensions and single center stringer. Pallets must be 48" in length, 40" in width, and must not exceed 5" in height. Full entry MUST be on the 40" width. **See Exhibit 10**. Strict adherence to these dimensions is necessary to accommodate storage requirements as well as ease of packing into freight carrier trailers. Cartons shall be stacked on pallets using a reverse layer pattern, 9 cartons per layer, with a maximum height of 55", including pallet. **Each carton contained on a pallet must show the completed IRS label (Form 6153) on the exposed side, once palletized.** Cartons must be fastened securely to the pallet in a manner that will prevent

movement during transit but permit ready removal, without damage to the cartons, at destinations. The use of metal strapping or pallet caps for securing material on pallets is **strictly prohibited. NOTE:** More than one partial pallet per destination is **strictly prohibited.**

Bill of materials list: A list must be compiled detailing the items on each truck and the quantities per item. Each pallet must be identified on two sides with a minimum 3" high number in black. The number on the pallet must correspond to the number on the list. The list is to be on a bright color stock and inserted into a minimum 4 x 4" plastic sleeve or on white stock and inserted into a bright colored sleeve, and affixed to the last pallet on each truck.

DOUBLE-STACKING PALLETS WHEN LOADING INTO TRUCK/TRAILER FOR SHIPPING IS *STRICTLY PROHIBITED.*

SECTION 5 – DISTRIBUTION: (MAILING/SMALL PACKAGE CARRIER/MOTOR FREIGHT):

Approx. 1,728,960 copies ship/mail f.o.b. contractor city to approx. 4,760 destinations. In addition, **destinations furthest from contractor's shipping location must ship/mail first;** destinations closest to contractor's shipping location must ship/mail last.

Ship 15 copies to: Library of Congress, US/Anglo Division, U.S. Government Documents Section, 101 Independence Ave., SE, Washington, DC 20540-4274. MARKED: Depository File Copies. **NOTE: All shipments to this destination must be via FedEx, UPS or United States Postal Service (USPS).**

Ship 1 copy to: U.S. Government Publishing Office, Federal Depository Library Program, Mail Stop: FDLP, 44 H St., NW, Loading Dock, Washington, DC 20401. Marked Depository Copies, Item no. 0964-E

Contractor must ship 200 "Blue Label" (included) copies f.o.b. contractor city via IRS furnished SPC account number.

All expenses incidental to picking up GPO government furnished materials, and furnishing 5 press sheets to Lanham, Maryland, must be borne by the contractor.

NOTE: If there is a discrepancy between the suggested transportation mode indicator in the furnished distribution files and the contract specifications, contractor must immediately notify Mary Morrison at Mary.E.Morrison@irs.gov for resolution prior to labeling and shipping.

If contractor ships or mails incorrectly, contractor will borne all additional costs incurred by the Government.

5.1 DOMESTIC MAIL (DM): Mailings must be made at Parcel Select DNDC/DSCF Presort and Parcel Select postage rates as applicable.

The DM transportation mode applies when:

- An address contains a P.O. Box **and a street address is NOT present** within the same line in the distribution file.
- An address is an APO, FPO, or U.S. Post Office destination.

The contractor must comply with all U.S. Postal Service regulations/requirements governing the preparation of Drop Ship Parcel Select DNDC/DSCF and/or Parcel Select rate mailings which are in effect at the time of the mailing, including the issuance of the required USPS forms (mailing statements), the weighing of shipments (mail manifests), etc.

Mailings which do not qualify for Drop Shipments must be mailed Parcel Select.

Mailings that do not qualify for Parcel Select postage rates must be mailed reimbursable Standard Post. Contractor must create the Standard Post mailing label and the label must contain the same information and format required for the Parcel Select label (excluding the Parcel Select mailing indicia). Contractor must apply the appropriate postage to each mailing. Contractor will be reimbursed for Standard Post postage by submitting a properly completed Postal Service (or equivalent) form with the voucher for billing.

The contractor is cautioned that "Postage and Fees Paid" Parcel Select indicia may only be used for the purpose of mailing material produced under this contract.

The contractor MUST meet with local postal authorities before the start of production to make arrangements for verification and DNDC/DSCF Parcel Select manifest approvals. The Domestic Mail Manual and other related USPS publications for Parcel Select mailings must be adhered to by all mailers.

The U.S. Postal Service will require that each DNDC/DSCF rate mailing be deposited at a time and location specified through an appointment procedure. The contractor/mailer will be responsible for scheduling the deposit of all DNDC/DSCF rate mailings at least 5 workdays in advance by contacting the manager, logistics and distribution, or designee, at the designated DNDC/DSCF, etc. The contractor/mailer must comply with the scheduled time.

Mailing Manifests: Contractor must provide mailing manifests on 2-part NCR paper. Part 1 is the USPS copy, and Part 2 is the contractor copy. Contractor must weigh at least 10 cartons containing forms to determine the accurate weight for each carton size. This procedure is both necessary and critical for providing an accurate manifest to the Postal Service for verification purposes.

USPS Plant-Verified Drop Shipments: On or before the date in the schedule, the contractor MUST submit its detailed plant-verified drop shipment plan for direct shipments to the DNDC/DSCFs, etc. The contractor must include all costs for preparing and implementing this plan in the total bid price (a separate charge will not be allowed).The detailed plan must be in the format shown in **Exhibit 11** for each shipment. The detailed plan must include the GPO jacket number and must be emailed to: Roy.M.Murdoch@irs.gov. Lawrence.T.Layden@irs.gov. Mary.E.Morrison@irs.gov. The Government will approve or disapprove the drop shipment plan within three (3) workdays after receipt. **NOTE:** At Government's option, Internal Revenue bills of lading (IRBLs) may be furnished.

Reimbursement for the actual freight costs for drop shipping will be made from copies of the commercial carrier freight bills that must be submitted with the contractor's invoice, and each freight bill must show the shipping cost and weight of the shipment." If the contractor utilizes a freight consolidator, payment will be made with the submission of the contractor's invoices showing actual charges to the contractor. Reimbursed freight costs will not be subject to any "prompt payment discounts. The contractor must provide the scheduled dates for dropping at the DNDCs/DSCFs. Contractor must include copies of the USPS Form 8125 that have been signed at the recipient destination along with their freight bills and invoices or a Track/Trace report showing the appointment dates and USPS confirmation numbers. Freight charges must not exceed those in the submitted drop shipment plan, except for allowable fuel surcharges. Current allowable fuel surcharges must be included in the drop shipment plan.

The contractor must provide adequate space at the mailing facility for postal employees to perform the necessary verifications. IRS will not apply for plant load authorization or plant verified drop shipment, this will be the contractor's responsibility. It is also the responsibility of the contractor, or their mailer, to ensure that their mailing documentation is completed in a timely manner and submitted to all applicable USPS offices. NOTE: Contractor/Mailer should give 48 hour notice for pickup of full truckload shipments.

The postal employee verifying the mail will provide a signed copy of Form 8125 (Plant-Verified Drop Shipment Verification and Clearance (PVDS) document. The CONTRACTOR/MAILER is responsible to ensure that this document travels with the mail and is made available for examination upon the request of the postal service at the destined DNDC/DSCF.

Drop Shipment Schedule: Within three (3) workdays of mailing complete, the contractor must email the scheduled dates and volumes for dropping at the DNDC/DSCFs to Mary.E.Morrison@irs.gov. Contractor must furnish a completed Drop Shipment Schedule in a similar format as shown in **Exhibit 12.**

Priority Mail (if required): A carton label will be provided for any cartons which must be shipped priority mail. The contractor must print the necessary quantity of priority mail labels required. Priority mail labels must be affixed to the top of each carton. Hand stamping of priority mail cartons is unacceptable. IRS priority mail must be entered into to the contractor's local post office for mailing. Contractor will provide manifests for delivered permit mail labels. The contractor must prepare the appropriate postal service forms for turnover to the local postal authorities.

5.2 <u>SMALL PACKAGE CARRIER (SPC) Contractor's City Shipments</u>: Contractor must ship via SPC Ground services when the SC transportation mode applies.

The SC (also known as SPC) transportation mode applies when:

- A street address is a non-expedited (ground) shipment weighing less than 750lbs to one destination within the 48 contiguous states, Alaska, Hawaii, or Puerto Rico.

NOTE: When an address contains both a P.O. Box and a street address, and the shipment weighs less than 750lbs but is NOT an APO, FPO, or U.S. Post Office location, contractor must disregard the P.O. Box and utilize the street address. In addition, the SPC label **must not contain the P.O. Box.**

- International packages (if required) weighing less than 500 lbs to one destination will be sent via small package carrier World Wide Express services.
- Expedited (air) shipments (if required) weighing less than 500 lbs. to one destination within the 48 contiguous states, Alaska, Hawaii or Puerto Rico must be sent via small package carrier 2nd Day air services.

The IRS will notify the contractor when expedited shipments are required. **Contractor must not use Next Day or Second Day Air options unless authorized by the IRS.**

The IRS will provide an IRS small package account number. The Contractor must notify Mary Morrison at Mary.E.Morrison@irs.gov, at least 10 workdays prior to the first scheduled ship date to ensure an account number has been established, and/or is valid. If there is any uncertainty concerning the instructions for small package carrier shipments, the contractor must notify Mary Morrison prior to the first ship date for clarification.

If multiple small package carriers are to be used, an account number will be assigned for each carrier. Contractor is required to ship IRS copies using the IRS designated carrier(s) and their assigned account number(s), or the contractor will be responsible for any additional shipping costs incurred by the Government.

Contractors are required to use a two-part manifest shipping report for each carrier that includes both a summary page and detailed shipping pages. The summary page is compiled using the information from the detailed shipping pages. The summary page must include the following information: 1) ship date; 2) shipper name; 3) complete address; 4) account number; 5) requisition number; and 6) totals for number of pieces and weight categorized by zone with grand totals for each.

The detailed shipping pages should include the following information for each package listed: 1) Account Number; 2) consignee's name; 3) complete consignee address; 4) zone; 5) weight; and 6) the matching shipper receipt portion of the traceable label. The original copy of the report should accompany the shipment.

The contractor's must notify UPS of the amount to be picked up in order for the carrier to provide adequate equipment for the pickup.

Email Notification: When an email address is present in the .csv distribution files, the contractor is required to send a same-day email notification of the shipment to the email address listed. All email notifications must include the following: IRS product short title; scheduled delivery date; recipient's name and address; number of packages; type of service; weight; SPC tracking number and a link to the SPC website; and reference numbers (reference field 1 (IRS requisition number and GPO jacket number) and reference field 2 (IRS type of account and account number (TF123456). **See Exhibit 4.**

NOTE: All returned emails should be set to automatically forward to: wi.tdfps.upsundelive@irs.gov.

Within three (3) workdays of shipping complete, the contractor must email the SPC shipping manifest including a "TRACK IT" link for each destination to Mary.E.Morrison@irs.gov.

5.3 <u>MOTOR FREIGHT (MF) Contractor's City Shipments (if required):</u> Contractor must ship via Motor Freight when the total shipping weight to a single destination is 750lbs or more, unless otherwise instructed by the Government. All Motor Freight shipments will be completed by an Internal Revenue Bill of Lading. IRBL(s) will be furnished to the contractor electronically by the IRS Postal & Transport Policy Office. If an IRBL(s) is/are not provided at least seven (7) workdays prior to the shipment date, the contractor must notify Roy Murdoch @ 309-556-5076 or Roy.M.Murdoch@irs.gov , or Lawrence (Tade) Layden @ 309-556-5077 or Lawrence.T.Layden@irs.gov immediately to make arrangements to receive IRBLs. The contractor will be required to complete information including but not limited to: total weight of shipment; number of cartons; number of pallets on the IRBL(s) prior to shipment.

The IRBL(s) will have designated carriers identified that provide special negotiated freight rates for IRS shipments. The contractor must not change the designated carrier(s) without prior written approval from the IRS. In the event the designated carrier(s) cannot be utilized, or if the contractor experiences a problem with the designated carrier, the contractor must immediately contact Roy Murdoch @ 309-556-5076 or Roy.M.Murdoch@irs.gov , or Lawrence (Tade) Layden @ 309-556-5077 or Lawrence.T.Layden@irs.gov to obtain alternate carrier(s) authorization. NOTE: If the contractor uses a carrier other than the designated carrier without prior written approval from the IRS, the contractor will be held responsible for any additional shipping costs incurred. If the contractor has any difficulty getting the designated carrier to pick, contact Joseph

Anidiobi at 469-801-0747 between the hours of 8:30 AM and 4:00PM eastern standard time.

Multiple Truckload Shipments: Whenever possible full truckloads should be utilized (e.g., use a full truckload and a partial truckload rather than two partial truckloads). The contractor will be provided multiple IRBLs for shipments to an individual destination exceeding a truckload. Only one bill of lading should be released for each truckload.

The contractor is accountable to the IRS for all IRBL(s) furnished under this contract. **Use of IRBLs for shipments not authorized by the IRS is strictly prohibited.**
Within three (3) workdays of shipping complete, the contractor must email IRBLs containing truckers' signatures to Mary.E.Morrison@irs.gov. In addition, contractor must notify IRS of all unused IRBL numbers furnished under this contract. **Mary.E.Morrison@irs.gov of unused IRBL numbers must be emailed** to Mary.E.Morrison@irs.gov. Any unused bills of lading must be returned by the contractor.

5.4 AIR FREIGHT SHIPMENTS (if required): The contractor will be notified by the IRS if Air Freight Shipments are required. Air bills will be provided by the IRS for shipments weighing 500 lbs or more to a single destination. Shipments weighing less than 500lbs must be sent via UPS Air Express – Next or Second Day delivery. The contractor must contact the designated air freight carrier to coordinate all air shipments and verify that pallets are accepted and that the maximum pallet weight is within that specific carrier's allowable weight limit.

Within three (3) workdays of shipping complete, the contractor must email IRBLs containing air freight carrier signatures and/or UPS manifest including a "TRACK IT" link for each destination to Mary.E.Morrison@irs.gov.

5.5 DEPARTMENTAL RANDOM "BLUE LABEL" COPIES: The contractor MUST submit 200 departmental random copies at the completion of production to test for compliance against specifications. The contractor must divide their total quantity into equal sublots and select 1 copy from a different general area of each sublot. The contractor will be required to execute the "Certificate of Selection of Random Copies", furnished by GPO, certifying that copies were selected as directed.

These randomly selected copies must be packed and identified by a special Government-furnished Blue label, affixed to each affected container. Shipping of blue labels for multiple items in a single container is strictly prohibited. Additional labels, if needed, are to be reproduced by contractor on Blue stock. The container and its contents shall be recorded separately on all shipping documents and sent to Internal Revenue Service, National Distribution Center, 1201 N. Mitsubishi Motorway, Bloomington, IL 61705-6613. Submit a copy of the SPECIFICATIONS and the signed Government-furnished "Certificate of Selection of Random Copies", along with the Departmental Random Copies.

SECTION 6 – QUALITY ASSURANCE

6.1 QUALITY ASSURANCE LEVELS AND STANDARDS: The following levels and standards shall apply to these specifications:

Product Quality Levels:
(a) Printing Attributes -- Level III.
(b) Finishing Attributes -- Level III.
Inspection Levels (from ANSI/ASQC 21.4):
(a) Non-destructive Tests -- General Inspection Level I.
(b) Destructive Tests -- Special Inspection Level S-2.

Specified Standards: The specified standards for the attributes requiring them shall be:

Attribute	Specified Standard
P-7. Type Quality and Uniformity	O.K. Press Sheets
P-9. Solid and Screen Tint Color Match	O.K. Press Sheets

Special Instructions: In the event that inspection of press sheets is waived by the Government, the following listed alternate standards (in order of precedence) shall become the Specified Standards:

P-7. Government furnished electronic files
P-9. Pantone Matching System.

6.2 COMPLIANCE: To monitor compliance, one or more quality assurance inspections of the pamphlets may be conducted by Government Publishing Office and/or Internal Revenue Service personnel.

SECTION 7-----PRODUCTION SAMPLES:

Contractor must send 5 production samples within 3 workdays after press startup to: IRS, SE:W:CAR:MP:P:TP:CD, Room 6564, Attention: Mary Morrison, (202) 317-3425, 1111 Constitution Ave, N.W., Washington, DC 20224. **NOTE:** *These copies are to be considered sample copies and **WILL NOT** be included in the quantity ordered and MUST NOT be included in the quantity billed.* Shipping of these samples must be borne by the contractor and sent overnight by traceable means. In addition, c**ontractor must NOT include these copies on IRS Forms 2040 and 9659.**

SECTION 8 – OFFERS (BIDS):

Offers must include the cost of all materials and operations for the total quantity ordered in accordance with these specifications.

BILLING ADJUSTMENTS DUE TO SCHEDULED QUANTITY CHANGES (+ or -) AND THE SUBTRACTION OF UNDELIVERABLES WILL BE AT THE CONTRACTOR'S "ADDITIONAL RATE". Prices for these "ADDITIONAL RATES" submitted must be based on a continuing run and must be EXCLUSIVE of all preliminary charges and will not be a factor in determining award.

Bidder MUST submit a price or NC (No Charge) for each line item in Sections 8.1, 8.2.1, 8.2.2, and 8.2.3 on the following pages. If an entry of NC is entered it shall be held the bidder intends to furnish those individual items at no charge to the Government.

Transportation charges are NOT a factor in determining award.

Bidder must state in the bid, the location (city and state) of the plant(s) from which this product will be shipped. Award will be made to the low responsible offeror whose offer is determined to be fair and reasonable.

8.1 Printing and Binding approx 1,728,960 pamphlets; creating address/SPC/DM labels, labeling and marking, packing and sealing, palletizing, staging, and shipping approx 19,645 cartons of instructions.
..... $_____

Bidder must state the cost of preparing and implementing the drop shipment plans included in the total bid above

$----------

8.2 Prices for Page Count Changes: The page count may change from the originally stated page counts at the time the print files are received. The contractor must enter a price or NC (no add'l charge to Government) below in 8.2.1. If contractor fails to enter a price or NC in 8.2.1, the contractor will be deemed non-responsive. The appropriate figure listed below in 8.2.1 must include set-up charges and will be used to reduce/increase the purchase order price based on FINAL page counts and FINAL quantities. These prices are not a factor in award. Although these prices are not a factor in award, the Government reserves the right to reject/renegotiate any prices it deems unreasonable at time of award.

8.2.1--- If page count increases from originally stated in the specifications, the price submitted below will increase the original Purchase Order price accordingly.

4 Pg. Increase……..…$_____/M_____

8.2.2--- Prices for Quantity Changes: Regardless of final page count, the price submitted in 8.2.2 will decrease/increase the original Purchase Order price by the difference between the bid quantity and the final quantity.

"ADD'L RATE"

Printing and Binding…….....…….....….per l, 000 copies… $_____

8.2.3--- Labeling, addressing, packing, sealing, palletizing, etc.: Price submitted in 8.2.3 will decrease/increase the original

Purchase Order price by the difference between the number of approximate cartons stated in the bid quantity and the number of cartons actually utilized based on the final quantity…….....….per carton…..…..$_____

INITIAL _____

8.3 Company name, address, contact name and telephone number, and production function of subcontractor(s), if any, who will perform on this contract.

_____

_____

8.4 Location of shipping point/staging area:

City_____ State_____ Zip Code_____.

8.5 Name of Contact person: _____ Phone Number: _____ FAX Number: _____

Email address (required)_____.

8.6 At the same time invoice and associated documentation is submitted to GPO for payment, contractor MUST email a copy to Mary E. Morrison at Mary.E.Morrison@irs.gov.

Bidder must fill out, initial and sign as indicated on pages 12 and 13 of these specifications and return it with the bid.

BID SUBMISSION: Submit bid in pre-addressed envelope furnished with solicitation or send to: U.S. Government Publishing Office, Bid Section, Room C-848, Stop: CSPS, 732 North Capitol Street, NW, Washington, DC 20401. Facsimile bids in response to this solicitation are permitted. Facsimile bids may be submitted directly to the GPO Bid Section, Fax No. (202) 512-1782. The jacket number and bid opening date must be specified with the bid. Refer to Facsimile Bids in Solicitation Provisions of GPO Contract Terms, GPO Publication 310.2, as revised June 2001. Hand delivered bids are to be taken to the GPO Bookstore at 710 North Capitol Street, NW, Washington, DC 20401 between the hours of 8:00 am and 4:00 pm on business days and follow the instructions in the Bid Submission / Opening area.

Note: With each bid submitted, whether written or facsimile, bidder must provide a duplicate copy.

_____ _____

Name of Firm Signature of Bidder

Exhibit 1

Beginning Oct 1, 2011, contractor lists provided by Distribution Requirements personnel will be provided in comma delimited format versus Microsoft Excel. This will provide for a smaller file size, resulting in a more efficient transmission. Additionally, the new distribution files will have additional fields added. The new fields will reduce the amount of file manipulation needed by the contractor and allow for easier direct import into a shipping system.

Below is an overview of fields that will be included in the new file, along with the corresponding field in the UPS WorldShip system software.

IRS Header Title	Length	UPS WorldShip Field Name
Program_Account	12	Reference Field 2
Contact	35	Attention
Phone	15	Telephone
Extension		
Organization	35	Company or Name
Supplementary_Address	35	Address Line 1
Delivery_Address	35	Address Line 2
City	35	City or Town
State	5	State/Province/County
Zip	9	Postal Code
Country	5	Country/Territory
Email_Address	50	Recipient Email Address
Email_Notification	1	QVN (Quantum View Notification) or Return Notification Option, Also used for: * QVN Ship Notification * QVN Delivery Notification
Loading_Dock	1	Not Used for Small Package
Inside_Delivery	1	Not Used for Small Package
Suggested_Transportation	2	DM = Domestic Mail (United States Postal Service MUST be used) SC = Small Package Carrier TL = Freight (Bill of Lading Required) AF = Air Freight (Bill of Lading Required)
Requisition_Jacket_Number	20	Reference Field 1
SKU	18	
Short_Title	20	
Product_Quantity	8	
Product_Cartons	4	
Product_Weight	4	
Shipment_Cartons	4	Number of Packages
Shipment_Weight	4	Actual Weight
Service_Type	3	Service Type (GRD = Ground)
Package_Type	2	Package Type (CP = Consumer Packaging)
Failed_email_address	50	Failed Email Address
Email_Ship_From_Name	3	QVN or Return Notification Ship From Company or Name
Email_Memo_Body	150	QVN or Return Notification Memo

Exhibit 2

Read Prior to Producing or Labeling Cartons

Labels MUST be generated from the PDF file provided. Handwritten updates are not allowed on any label. If these instructions are not followed, the Contractor will be held responsible for all re-labeling charges.

Section I – Prior to Producing Label

1) **Contact the IRS for a new carton label** if any of the following fields are blank when the label is received: (a) Catalog number, (b) Revision, (c) Requisition number, (d) Product number, or (e) Product title.

2) **Fields for Contractor to Update Electronically:** (a) Carton # of # *(see number Section I, 3 below)*; (b) From address; (c) To address *(see exception under Section II, 2, Cartons via Small Package Carrier (SPC) below)*; and (d) Carton quantity *(if carton quantity is blank, it must be updated with the correct packing quantity)*.

3) **Automated Carton # of # fields:** To print the correct number of labels for each address with sequential carton numbers, input the total number of cartons in second # field and press "Print Labels" button. **Warning: Once the print button is pressed, printing cannot be canceled. Be sure all information is correct prior to printing.**

4) **Printing:** Labels must be produced same-size in black ink on white paper.

5) **Proof:** An electronic proof of the label may be required if indicated on the contract or print order.

Section II – Labeling for Shipment

1) **Cartons:** All cartons must have IRS shipping label affixed to one end of the carton only (never on top, long-side, or bottom).

2) **Cartons via Small Package Carrier (SPC):** Affix SPC label to top of carton on edge nearest to IRS label. If shipping via SPC to the IRS National Distribution Center, leave the "To (Consignee)" address field blank.

3) **Small SPC packages/boxes/envelopes via SPC:** Affix IRS label to front of package and SPC label to the back. This includes advance distributions and IRS samples.

cut here ---------- *cut here*

Phaser 7300DX - Room 6231 | **Print Labels** | **SAVE AS** | **RESET**

Carton Shipping Label

Department of the Treasury **Internal Revenue Service**	Publishing analyst John Doe	Phone number (202) 123-4567	Carton #	of # 1
GPO Jacket number 377-060	Print order number	Program number		
From *(Contractor name and address)* XYZ INC 123 SERVICE CENTER DRIVE ANYTOWN, US 12345		To *(Consignee)* PD 123456789 YOGI BEAR (123) 456-7890 150 STATE ROUTE 142E OXLY, MO 63955		
Catalog number **24811V**	Revision *(YYYY-MM-DD)* **2013-00-00**	*24811V2013-00-00*		
Product number *(Form, Document, Publication, etc)* **I 1040**		Product title INSTRUCTIONS FOR FORMS 1040 and 8949, and SCHEDULES 8812, A, C, D, E, F, R, & SE		
Carton quantity **88**	Requisition number *(YY-nnnnn)* **16-03083**	*8816-03083*		

Form **6153** (Rev. 3-2006) Catalog Number 62724N Department of Treasury - **Internal Revenue Service**

Phaser 7300DX - Room 6231 | **Print Labels** | **SAVE AS** | **RESET**

Exhibit 3

Contractor's Notification of Quality Assurance Inspection

This form MUST be e-mailed to the IRS at least 72 hours prior to all inspections or production.

E-mail this form to both parties as noted in the contract:	**Quality Assurance Program Manager**		**E-mail address**	
	Printing Specialist	MARY MORRISON	**E-mail address**	MARY.E.MORRISON@IRS.GOV

IRS Contract Information		**Contractor Information**	
Tax Product Number/Title		Company Name	
Quantity		GPO Contractor Code (8-digit)	
Contract Value		Contact Name	
IRS Requisition Number		Contact Telephone Number	
GPO Jacket Number	377-069	Contact E-mail	

Inspection Information

Type of Inspection (select all that apply)

- ☐ Form Signatures
- ☐ Newsprint Signatures
- ☐ Cut Sheet Form
- ☐ OCR Form
- ☐ Snapset/NCR
- ☐ Color/Multi-Color
- ☐ Imaging/Lasering
- ☐ Bindery
- ☐ Other _____

Inspection Location Address (City, State, ZIP Code)

Date and Time of Inspection

Additional Information

☐ Inspection Accepted **Date**

☐ Inspection Waived **Date**

Exhibit 4

Production and Mailing Report

Complete this form daily for **each** product monitored. Be sure to change the Date Submitted field each day. The QM Submitting field must show the name of the QM submitting this report. The entry in a production operation (printed, imaged, etc.) must be the total for that day and that operation. Do not use commas in the quantities, they format automatically and the total will display in the Cumulative Totals row.

Contractor _____ **City, State** _____

Product(s) _____ **GPO Jacket(s)** 392-907

QM Submitting _____ **Date Submitted** _____

Date	Printed	Bound/Finished	Imaged	Inserted	Other ( )	Mailed
Cumulative Totals						

Comments (EX: SC or BMC mail totals or production notes.)

United States Postal Service

Exhibit 5

Postage Statement — Package Services

(Bound Printed Matter, Library Mail, Media Mail, Parcel Post, and Parcel Select)

Post Office: Note Mail Arrival Date & Time (Do Not Round-Stamp)

Use this form for all Package Services. Only Library Mail and Media Mail may be combined.

Mailer

Permit Holder's Name and Address and Email Address If Any | Telephone

CAPS Cust. Ref. No. _____

Customer No. _____

Name and Address of Mailing Agent *(If other than permit holder)* | Telephone

Customer No. _____

Name and Address of Individual or Organization for Which Mailing Is Prepared *(If other than permit holder)*

Customer No. _____

Mailing

Post Office of Mailing

Type of Postage: ☐ Permit Imprint ☐ Metered

Permit #

Processing Category: ☐ Flats ☐ Parcels

Packaging Based on: ☐ Piece Count ☐ Weight ☐ Both

Mailing Date

Federal Agency Cost Code

Weight of a Single Piece ___ ___ . ___ ___ ___ ___ pounds

If Sacked, Based on: ☐ Piece Count ☐ 20 Pounds

Statement Seq.No.

Total Pieces

Total Weight

No. & Type of Containers: _____ Sacks _____ Flat Trays _____ Pallets _____ Other

For Barcoded Rate Pieces, Enter Date of Address Matching and Coding ___ ___ / ___ ___ / ___ ___ ___ ___

Postage

Parts Completed *(Select all that apply)* ☐ A ☐ B ☐ C ☐ D & E ☐ S

Total Postage *(Add parts totals)*

Price at Which Postage Affixed *(Check one)* Complete if the mailing includes pieces bearing metered or precanceled stamps.
☐ Correct ☐ Lowest ☐ Neither _____ pcs. x $ _____ . _____ = **Postage Affixed**

Net Postage Due *(Subtract postage affixed from total postage)*

For USPS Use Only: Additional Postage Payment *(State reason)*

(Add additional payment to net postage due and total in box for affixed or permit imprint - choose one only) **Total Adjusted Postage Affixed**

Postmaster: Report Total Postage in Applicable AIC (Permit imprint only)

AIC 131	**Total Adjusted BPM Postage Permit Imprint**
AIC 124	**Total Adjusted Media Mail/Lib. Mail Postage Permit Imprint**
AIC 223	**Total Adjusted Parcel Post/Select Postage Permit Imprint**

Certification

The mailer's signature certifies acceptance of liability for and agreement to pay any revenue deficiencies assessed on this mailing, subject to appeal. If an agent signs this form, the agent certifies that he or she is authorized to sign on behalf of the mailer, and that the mailer is bound by the certification and agrees to pay any deficiencies. In addition, agents may be liable for any deficiencies resulting from matters within their responsibility, knowledge, or control. The mailer hereby certifies that all information furnished on this form is accurate, truthful, and complete; that the mail and the supporting documentation comply with all postal standards and that the mailing qualifies for the rates and fees claimed; and that the mailing does not contain any matter prohibited by law or postal regulation. I understand that anyone who furnishes false or misleading information on this form or who omits information requested on this form may be subject to criminal and/or civil penalties, including fines and imprisonment.

Privacy Notice: For information regarding our Privacy Policy visit *www.usps.com*

Signature of Mailer or Agent | Name of Mailer or Agent | Telephone

USPS Use Only

Weight of a Single Piece ___ ___ . ___ ___ ___ ___ pounds

Total Pieces | Total Weight

Total Postage

Presort Verification Performed? *(Check One)* ☐ Yes ☐ No

I CERTIFY that this mailing has been inspected concerning: (1) eligibility for postage rates claimed; (2) proper preparation *(and presort where required)*; (3) proper completion of postage statement; (4) payment of annual fee; and (5) sufficient funds on deposit *(if required)*

USPS Employee's Signature

Is figure at left adjusted from mailer's entries? ☐ Yes ☐ No

If "Yes," Reason

Date Mailer Notified | Contact | By *(Initials)*

Print USPS Employee's Name | Time AM PM

Round Stamp *(Required)* Date Mail Released

Shipping Status: ☐ Start ☐ Partial ☐ Complete Instructions **Preliminary**

Exhibit 6

Distribution / Shipping List

Save 2040

Requisition number	Jacket number / Source	Print order number	Originator symbols	Contractor code	Date	
2013-NO-06567	377-069 /GPO		SE:W:CAR:MP:D:DR:T		06-07-2013	--

Item (Form, Document, Publication, Notice etc.)	Catalog number	Revision date	Ship date	
V DIRECT SHIP INSTR(1)	32244 M	2013 ☐ Reprint ☒ Revison	☐ FOB contractor city ☐ FOB destination	, 00000

Printing specialist	Phone number	Distribution analyst	Phone number	Carton quantity	Weight factor	Quantities stated below are
Skyrm, Theresa	202-283-4912	Clark, Richard	309-556-5064	0	0.909	☒ each ☐ pads ☐ sheets ☐ sets ☐ rolls

Title/Description

DIRECT SHIP Instructions (1040ALL, 1040A, & 1040EZ)

Remarks

inst 1040 ALL 3,106,268; Inst 1040 A 2,799,000; Inst 1040 EZ 3,125,000
Blue label sample 200 copies of each instruction

OPN	IRS Centers	Order Quantity	Ship Quantity	Date Shipped
88100-1499	IRS/NATIONAL DISTRIB CENTER BLUE LABEL COPIES 1201 N MITSUBISHI MTWY BLOOMINGTON, IL 61705-6612	600		
99999-6699	IRS/CONTRACTOR DIST - SEE DIST LIS CONTRACTOR DISTRIBUTION , 00000	9030268		
		9030868		

Exhibit 7

Lock IRS only fields/Save Form As | Print | Save as

IRS Publishing Postage Report

Attach Postage Statements

(Return this form by email using the email button above)

View Attached Files

IRS Use Only					
Agency cost code 67039	GPO state code	GPO contractor code	Material group 2382 Tax Packages		
Printing Services Specialist email address MARY.E.MORRISON@IRS.GOV	IRS requisition number	GPO jacket number 392-907	Print order number	Program number	

Instructions: Once this form is received, the contractor should: 1) fill in the fielded data below; 2) create a new PDF file. This PDF file must contain this page and (if applicable) Form 13456-C, continuation sheet. 3) Using the "Attach" button at the top of this page, attach copies of all postage statements that correspond to the information on each line below. 4) Rename the new PDF as per the contract specifications; and, 5) Using the "Email" button at the top of this page, email the new PDF. **DO NOT SCAN** either page of Form 13456.

Name of contractor

Contact person at contractor	Telephone number of contact person	Email address of contact person
Mailing start date *(mm-dd-yyyy)*	Mailing end date *(mm-dd-yyyy)*	☐ Mailings ☐ Wave _____ of _____

Zip Code of Post Office used for mailing	nt	Pieces Mailed	Postage Amount	Postage Statement Type
(Example) 22201		155,555	$12,234.56	3602-G Penalty Permit

December 2015

Su	M	Tu	W	Th	F	Sa
		1	2	3	4	5
6	7	8	9	10	11	12
13	14	15	16	17	18	19
20	21	22	23	24	25	26
27	28	29	30	31		

Total # of pieces mailed =

Total postage amount = $

EXHIBIT 8

Instructions for Form 6153-A, Parcel Select Package Label

1. All cartons being mailed via Parcel Select must have the **Parcel Select Package Mailing Label** affixed at the appropriate place. Carton must be labeled on one end (never on top, sides or bottom).

2. If not entered on the camera copy by the IRS, the following items must be filled in by the contractor:

   - **Return Address (Upper left hand corner, above Official Business Penalty for Private Use)**
   - **Carton Quantity (Number of copies in each carton)**
   - **Consignee information**
   - **Contractor's Name and Address**

3. The label must be reproduced same size in black ink on white paper.

cut here ---------- *cut here*

Parcel Select Package Label

INTERNAL REVENUE SERVICE
NATIONAL DISTRIBUTION CENTER
1201 N. MITSUBISHI MOTORWAY
BLOOMINGTON, IL 61705-6613

Parcel Select
Postage & Fees Paid
IRS
Permit No. G-48

Official Business
Penalty for Private Use, $300

Consignee TF 123456A
US POST OFFICE
YOGI BEAR
150 STATE ROUTE 142E
OXLY, MO 63955-0000
contractor created IMpb

Contractor information
XYZ INC
123 Service Center Drive
Anytown, US 12345

Product number *(Form, Document, Publication, etc)*	Catalog number	Revision date	IRS req. number	Carton quantity
I 1040 ALL	11325E	2013-00-00	13-06567	48

Product title

INSTRUCTIONS FOR FORMS 1040 & 8949, SCHEDULES 8812, A, C, D, E, F, R, & SE

GPO Jacket number	Print order number	Program number
377-069		

Form 6153-A (Rev 9-2013) Catalog Number 44929U publish.no.irs.gov Department of the Treasury - **Internal Revenue Service**

Exhibit 9

Sample of UPS Quantum View Notify Email generated from File:

This message was sent to you at the request of IRS to notify you that the electronic shipment information below has been transmitted to UPS. The physical package(s) may or may not have actually been tendered to UPS for shipment. To verify the actual transit status of your shipment, click on the tracking link below or contact IRS directly.

Important Delivery Information

Message from IRS:
The IRS is shipping your order of F 1040, F 1040 A, F 1040 EZ, F 1040 SCH A & B within the next 5 days.

Scheduled Delivery: 20-May-2011

Shipment Detail

Ship To:
JOANNE GENTRY
AGAWAM PUBLIC LIBRARY
750 COOPER ST
AGAWAM
MA
010012177
US

Number of Packages: 3
UPS Service: GROUND
Weight: 80.0 LBS

Tracking Number: 1Z7621240392525675
Reference Number 1: 10-15324/309-654
Reference Number 2: TF100045J

Click here to track if UPS has received your shipment or visit http://www.ups.com/WebTracking/track?loc=en_US on the Internet.

IRS Pallet Specifications

Exhibit 10

All shipments delivered to the National Distribution Center (NDC), must conform to the specifications outlined in this document. To ensure shipments are 100% compliant and received by the NDC, please reference Publication 4803 and any relating information outlined in the work contract specifications. Non-conformance to the specifications of this document, the standards described in Publication 4803 and or specific instructions outlined in the work contract specifications, may result in corrections at the vendor's expense.

Pallet Measurements

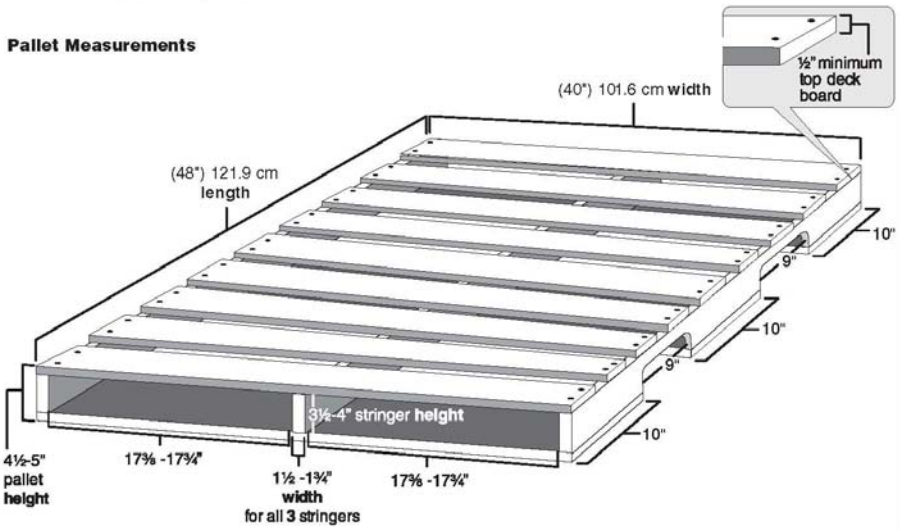

Stacked Pallet Height

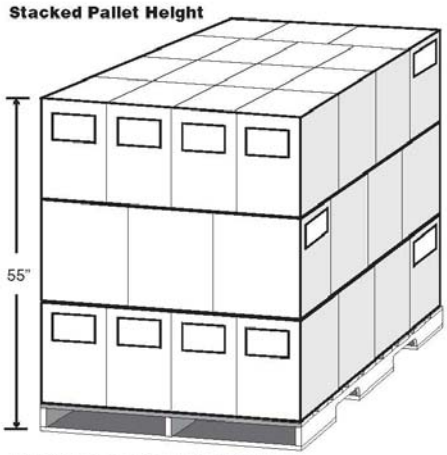

For IRS products the maximum full pallet height (pallet + cartons) **must not** exceed 55".

15 tier stacking method

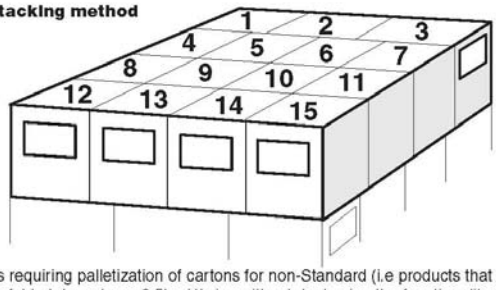

Shipments requiring palletization of cartons for non-Standard (i.e products that are not and can not be folded down to an 8.5' x 11' size without destroying the functionality or integrity of the product) IRS products should be stacked using this 15 tier method.

9 tier stacking method

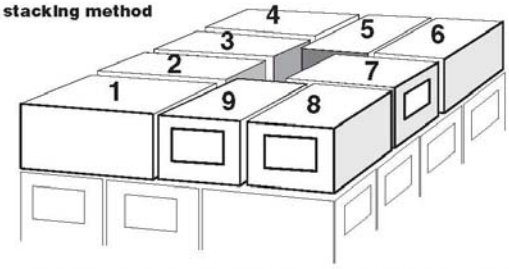

Products that are 8.5' x 11' or can be folded to those dimensions are considered standard IRS products and should be stacked using this 9 tier method.

Document 12321 (Rev. 1-2013) Catalog Number 47403N Department of the Treasury **Internal Revenue Service** publish.no.irs.gov

Exhibit 11

Example Format for Proposal of Drop Shipping Costs

Destination	Piece Count	Approx. Weight		Postal Discounts	Freight Charges	Net Savings	Net Postage Cost	Number of Transit Days
		Without Tare	With Tare					
BMC San Francisco, CA								
BMC New Jersey, NJ								
BMC Dallas, TX								
BMC Seattle, WA								
BMC Jacksonville, FL								
BMC Sub-Total								
SCF San Diego, CA								
SCF Flushing, NY								
SCF Grand Prairie, TX								
SCF Portland, OR								
SCF Tampa, FL								
SCF Sub-Total								
Grand Total								

EXHIBIT 12

Drop Shipment Schedule

BMC/SCF	Scheduled Drop Date	Volume	Recipient Delivery Date