AUTHENTICATED
U.S. GOVERNMENT
INFORMATION
GPO

FEDERAL REGISTER

Vol. 78 Thursday,
No. 225 November 21, 2013

Part II

Department of Transportation

National Highway Traffic Safety Administration

49 CFR Part 572

Anthropomorphic Test Devices; Q3s 3-Year-Old Child Side Impact Test Dummy, Incorporation by Reference; Proposed Rule

DEPARTMENT OF TRANSPORTATION

National Highway Traffic Safety Administration

49 CFR Part 572

[Docket No. NHTSA–2013–0118]

RIN 2127–AL04

Anthropomorphic Test Devices; Q3s 3-Year-Old Child Side Impact Test Dummy, Incorporation by Reference

AGENCY: National Highway Traffic Safety Administration (NHTSA), Department of Transportation (DOT).

ACTION: Notice of proposed rulemaking (NPRM).

SUMMARY: This document proposes to amend our regulations to add specifications and qualification requirements for an anthropomorphic test device (ATD) representing a 3-year-old child, called the ''Q3s'' side impact test dummy. The agency plans to use the Q3s to test child restraint systems to new side impact performance requirements which NHTSA will propose to adopt into the Federal motor vehicle safety standard for child restraint systems by way of a separate NPRM. Adopting side impact protection requirements is consistent with a statutory provision set forth in the ''Moving Ahead for Progress in the 21st Century Act'' (July 6, 2012), that the agency issue a final rule to improve the protection of children seated in child restraint systems during side impacts.

DATES: You should submit your comments early enough to ensure that Docket Management receives them not later than January 21, 2014. *Proposed effective date:* The CFR would be amended on the date 60 days after date of publication of the final rule.

ADDRESSES: You may submit comments to the docket number identified in the heading of this document by any of the following methods:

- *Federal eRulemaking Portal:* Go to *http://www.regulations.gov.* Follow the online instructions for submitting comments.
- *Mail:* Docket Management Facility, M–30, U.S. Department of Transportation, West Building, Ground Floor, Rm. W12–140, 1200 New Jersey Avenue SE., Washington, DC 20590.
- *Hand Delivery or Courier:* West Building Ground Floor, Room W12–140, 1200 New Jersey Avenue SE., between 9 a.m. and 5 p.m. Eastern Standard Time, Monday through Friday, except Federal holidays.
- *Fax:* (202) 493–2251.

Regardless of how you submit your comments, you should mention the docket number of this document.

You may call the Docket at 202–366–9324.

Instructions: For detailed instructions on submitting comments and additional information on the rulemaking process, see the Public Participation heading of the Supplementary Information section of this document. Note that all comments received will be posted without change to *http://www.regulations.gov*, including any personal information provided. Please see the Privacy Act discussion below.

Privacy Act: Anyone is able to search the electronic form of all comments received into any of our dockets by the name of the individual submitting the comment (or signing the comment, if submitted on behalf of an association, business, labor union, etc.). You may review DOT's complete Privacy Act Statement in the **Federal Register** published on April 11, 2000 (65 FR 19477–78).

FOR FURTHER INFORMATION CONTACT: For technical issues: Peter Martin, NHTSA Office of Crashworthiness Standards (telephone 202–366–5668) (fax 202–493–2990). For legal issues: Deirdre Fujita, NHTSA Office of Chief Counsel (telephone 202–366–2992) (fax 202–366–3820). Mailing address: National Highway Traffic Safety Administration, U.S. Department of Transportation, 1200 New Jersey Avenue SE., West Building, Washington, DC 20590.

SUPPLEMENTARY INFORMATION:

Table of Contents

I. Introduction
II. Background
  a. Evolution of the Dummy
  b. Developments
  c. Build Level D
III. Description
  a. General Construction
  b. Instrumentation
IV. Biofidelity
  a. Anthropometry
  b. Biofidelity Assessment Under Dynamic Loading
V. Repeatability and Reproducibility
  a. R&R in Sled Tests
  b. R&R in Component Qualification Tests
VI. Qualification Tests
  a. Overview of Proposed Corridors
  b. Rationale for the Tests
  c. New and Modified Part 572 Tests and Equipment
  d. Proposed Test Specifications and Performance Requirements
VII. Durability
  a. High-Energy Component Tests
  b. Q3s Servicing and Maintenance
VIII. Drawings and Patents
IX. Consideration of Alternatives
X. Rulemaking Analyses and Notices
XI. Public Participation

I. Introduction

This document proposes to amend 49 CFR Part 572 to add specifications and qualification requirements for a test dummy representing a 3-year-old child, called the ''Q3s'' side impact test dummy. The Q3s is a modified version of a European side impact dummy. In accordance with the ''Moving Ahead for Progress in the 21st Century Act'' (MAP–21) (Pub. L. 112–141), NHTSA will be issuing a proposal, which we expect to publish shortly, to amend Federal Motor Vehicle Safety Standard (FMVSS) No. 213, ''Child restraint systems'' (49 CFR 571.213), to adopt side impact protection requirements for child restraints.[1] The agency is considering a proposal that incorporates the Q3s in the side impact compliance test procedure.

This document proposes to incorporate specifications and qualification requirements for the Q3s into 49 CFR Part 572, ''Anthropomorphic test devices.'' The Q3s would be specified in a new subpart W. This NPRM proposes incorporating by reference a parts list, a set of design drawings, and a ''Procedures for Assembly, Disassembly and Inspection (PADI)'' document, to ensure that all Q3s dummies are the same in their design and construction.[2] Subpart W of 49 CFR Part 572 would specify performance tests that serve to assure that the Q3s responses are within the established qualification corridors and further assure the uniformity of dummy assembly, structural integrity, consistency of response, and adequacy of instrumentation. These specifications ensure the repeatability and reproducibility of the dummy's impact response in child restraint compliance tests.

The agency plans to propose adding a side impact test to FMVSS No. 213, one in which child restraint systems (CRSs) sold for children weighing up to 18 kilograms (kg) (40 pounds (lb)) must protect the child occupant in a dynamic sled test simulating a vehicle-to-vehicle side impact.[3] We are considering using

[1] Subtitle E of MAP–21, entitled ''Child Safety Standards,'' includes § 31501(a) which states that, not later than 2 years after the date of enactment of the Act, the Secretary shall issue a final rule amending Federal Motor Vehicle Safety Standard Number 213 to improve the protection of children seated in child restraint systems during side impact crashes.

[2] Drawings and the PADI for the Q3s are available for examination in the docket for this NPRM.

[3] A discussion of NHTSA's research evaluating and developing the side impact test procedure can be found in Sullivan et al., ''NHTSA's Evaluation of a Potential Child Side Impact Test Procedures,'' 22nd International Technical Conference on the Enhanced Safety of Vehicles, Paper No. 2011–0227 (2011).

the Q3s to test child restraints recommended for children in a weight range that includes 10 kg to 18 kg (22 to 40 lb). Among other things, we are considering a proposal that would require those child restraints to limit the risk of head and chest injury to children in a side impact. We are considering using the Q3s to measure the risk of head injury by way of a head injury criterion (HIC) (computed within a specified timeframe, e.g., 15 millisecond (ms) (HIC15)), and the risk of chest injury using thorax deflection as a criterion.

NHTSA seeks to adopt side impact protection requirements in FMVSS No. 213 that would be evaluated in a dynamic test simulating an actual vehicle crash. Our goal has been to use an anthropomorphic test device (ATD) that has a sound biofidelic response under lateral loading, with internal instrumentation sufficient to record injurious body loads. We seek to adopt an ATD that is suitable for use in regulatory tests with demonstrated repeatability, reproducibility, and durability. Within a test laboratory, the ATD would be practical to handle and maintain. The dummy would be available at a reasonable cost.

The Q3s test dummy appears to have all of the above attributes. As discussed in this NPRM, NHTSA is satisfied with the overall biofidelity of the Q3s and we have found that it exhibits repeatable and reproducible performance in CRS side impact sled testing and in component-level qualification testing. The Q3s demonstrates sufficient durability in high-energy qualification tests and in CRS side impact sled testing. The agency has tentatively concluded that the dummy is a reliable test device that will provide valuable data in assessing the potential for injury in side impacts and is suitable for incorporation into Part 572.

II. Background

a. Evolution of the Dummy

The Q3s evolved from predecessor P-series test dummies developed by the Netherlands Organization for Applied Scientific Research (TNO). The P-series first was introduced into European CRS standards in 1981 with the adoption of United Nations Economic Commission for Europe (UNECE) Regulation No. 44, ''Uniform Provisions Concerning the Approval of Restraining Devices for Child Occupants of Power-Driven Vehicles (Child Restraint Systems).'' Initially, the P-series of dummies served only as CRS loading devices to assure CRS integrity in a frontal dynamic sled test.

In 1993, the European Commission formed a child dummy working group to develop a successor series of dummies called the Q-series. It was envisioned that the Q-series dummies would be used in frontal and side impact tests, and would be more anthropometrically correct than the P-series, and instrumented to enable injury assessment for the head, neck, and chest. The conceptual dummy design was led by TNO, while working group members as a whole established the anthropometry, biofidelity, and measurement requirements for the new Q-series. In late 1997, the specifications for the first dummy of the Q-series, the three-year-old version known as the ''Q3,'' were reported by TNO.

In 1999, a dummy manufacturer then named First Technology Safety Systems (FTSS) [4] acquired the dummy development and manufacturing business of TNO. At that time, testing indicated that the Q3 dummy's performance was suboptimal in frontal testing and even more so in lateral.[5] Around 2001, FTSS initiated the design cycle for the Q3s, which was an improved side impact version of the Q3.

In early 2002, NHTSA tested a prototype version of the Q3s.[6] NHTSA evaluated this Q3s unit using qualification-style pendulum and impactor tests to assess functionality, durability, and biofidelity. We determined that the thorax of the prototype appeared biofidelic and repeatable, but the shoulder and pelvis were much too stiff. Moreover, the neck was a single-piece rubber column (i.e., it was not segmented by aluminum discs as is typical in other dummy necks), and we found its biofidelity to be marginal in frontal and lateral flexion. In our tests, we observed that the rubber neck material tended to bunch together at maximum flexion, which appeared to improperly restrict the neck bending.

Other organizations acquiring prototype Q3s units included Transport Canada and Takata Holdings (Takata). Transport Canada explored the biofidelity of the Q3s through impacts delivered by pendulums and impactor testing. Takata exercised the dummy by performing several sets of sled tests with the ATD seated within a CRS.[7] Both Transport Canada and Takata found problems with their Q3s units similar to those found by NHTSA. These problems were conveyed to FTSS through public critiques, and through committee meetings of the International Organization for Standardization (ISO) and SAE International (SAE).[8]

Meanwhile, SAE developed new biofidelity response targets for child-sized side impact ATDs, including a three-year-old child dummy, to support work on side impact protection for children.[9] The new child targets were determined by scaling adult biofidelity targets previously established by ISO.[10] These targets became a new set of criteria for FTSS to incorporate into the dummy design, in addition to solving the functionality and durability problems noted by NHTSA and the other organizations.

FTSS continued to work on the Q3s and in April 2006, released the Q3s Build Level A, its first production version of a new, Q3s-specific design. Within a year, several additional upgrades were incorporated into the design and by July 2007 Build Level C was released.

b. Developments

In 2007, the Occupant Safety Research Partnership (OSRP),[11] together with

[4] In 2010, FTSS was merged into a new company, Humanetics Innovative Solutions (Humanetics). In this preamble, when we discuss work done by the company prior to 2010, we use the name FTSS. When we refer to the company's activities after 2010, we will refer to the name ''Humanetics.''

[5] The Q3 was assessed in: Berliner et al. (2000), Comparative evaluation of the Q3 and Hybrid III 3-Year-Old dummies in biofidelity and static out-of-position airbag tests, Stapp Car Crash Journal, V44: 25–50. Since the Q3 had yet to show it was suitable for side impact testing, NHTSA chose to use the HIII–3C in child restraint side impact testing the agency conducted following on the Transportation Recall Enhancement, Accountability and Documentation Act of 2000 (TREAD Act). The testing led up to an advance notice of proposed rulemaking (ANPRM) which NHTSA published on May 2, 2002, 67 FR 21836.

[6] The unit was a modified Q3 that NHTSA had owned.

[7] Takata was developing a ''sled-on-sled'' test methodology. Takata was also involved with the International Organization for Standardization (ISO) and UNECE Reg. No. 44 committees on CRS sled test development, and for this purpose Takata also tested the P3, Q3, and the HIII–3C on its sled system.

[8] ISO is a worldwide standards-setting organization. The Q3s dummy was discussed in the meetings of ISO Technical Committee TC 22, Road vehicles, Subcommittee SC 12, Passive safety crash protection systems. SAE is also a worldwide standards-setting organization.

[9] The work of SAE to establish biofidelity targets for child ATDs was overseen by the Biomechanics and Simulation Standards Committee. The targets and methodologies are published in Irwin AL, Mertz HJ, Elhagediab AM, Moss S (2002), Guidelines for Assessing Biofidelity of Side Impact Dummies of Various Sizes and Ages. Stapp Car Crash Journal V46: 297–319.

[10] ISO/TR 9790:1999 Road vehicles—Anthropomorphic side impact dummy—Lateral impact response requirements to assess the biofidelity of the dummy.

[11] OSRP is an organization of the ''United States Council for Automotive Research (USCAR),'' which is a collaborative technology organization of Chrysler Group LLC, Ford Motor Company and General Motors Company.

Transport Canada (TC), tested Q3s Build Level C units to evaluate the biofidelity and durability of the dummy, as did NHTSA. Extensive testing was conducted to evaluate the biofidelity of the head, neck, shoulder, thorax, and pelvis against the new SAE side impact response corridors. In addition, the dummy was evaluated against targets for the response of the neck in flexion and the response of the shoulder under lateral loading.[12]

As a result of the OSRP/TC and NHTSA evaluations of Build Level C units, three key deficiencies emerged: (1) The neck did not provide biofidelic responses in the lateral bending mode; (2) the upper femur ball could dislodge from the hip socket during sled tests; and (3) the thorax exhibited cracks near the spine box following typical lateral impacts.

c. Build Level D

Over the next several years, FTSS (hereinafter ''Humanetics'') improved the performance of the Q3s as a result of the findings of OSRP/TC and NHTSA.

Neck and Femur and Hip Redesigns

Although Humanetics had incorporated a redesign of the neck into Build Level C, the OSRP/TC and NHTSA tests indicated that the neck was in need of further work. Previously, NHTSA had designed a head and neck retrofit for side impact applications for the Hybrid III 3-year-old child dummy (HIII–3C). Tests of this redesigned neck showed that it provided a more biofidelic response in lateral flexion, and better limited the amount of axial twist than the neck of the Q3s Build Level C.[13] The NHTSA-developed neck specifications [14] were applied by Humanetics to the Q3s, and the new neck was incorporated into the Q3s in 2009, with subsequent revisions by NHTSA to the neck center cable in 2012.

NHTSA also contributed to the redesign of the femur and hip and several other minor parts of the dummy. The revisions were undertaken to resolve the problem of the upper femur ball becoming dislodged from the pelvis hip cup. This was accomplished by replacing the femur ball and plastic hip cup with hardened aluminum components. The new pelvis design was incorporated into the Q3s in 2009.

Thorax Material Selection

The thorax of the Q3s is a one-piece plastic casting. The cracks near the spine box have been addressed by a change to a new castable polyurethane resin material known by its trade name, Adiprene.

To assess the durability of the Q3s, NHTSA had established thorax durability criteria consisting of 100 lateral impacts conducted using the qualification test parameters (3.8 kg (8.4 lb) impactor at 3.3 meters per second (m/s)) and ten additional high-severity impacts at 4.2 m/s. In 2011, Humanetics incorporated Adiprene into the production level Q3s. Test dummies with the new thorax material were able to meet the agency's thorax durability criteria.

Built Level D Retrofit

The above revisions have been incorporated in a production version of the Q3s dummy that is commercially available from Humanetics. Humanetics' latest version of the Q3s, Build Level D, was released in December 2010 and updated in 2011 with the Adiprene thorax, and again in 2012 with a revision to the neck center cable. The latest revisions have been retrofitted to the four Q3s units owned by NHTSA. In the agency's subsequent tests—including CRS sled testing and qualification-style impact testing—the revised neck was demonstrated to meet NHTSA's performance criteria, and the revised pelvis and thorax have shown no signs of failure and no degradation of performance.[15]

III. Description

The Q3s weighs 14.5 kg (32.0 lb). The 539 millimeter (mm) seated height of the dummy is representative of a 50th percentile 3-year-old child. The cost of an uninstrumented Q3s unit is about $48,750. The cost of a minimum set of instruments needed for qualification and compliance testing adds approximately $18,200, for a total cost of about $66,950.

a. General Construction

With the exception of fasteners, instrument mounting plates, and stiffeners for the femurs, the Q3s is almost completely devoid of steel. The Q3s has about half the number of parts as the HIII–3C, which eases its assembly and disassembly compared to the Hybrid III child dummies. The main parts of the dummy are described below.[16]

Head

The Q3s head is a fiberglass mold and consists of the skull and a removable rear skull cap. Both parts are covered with a softer plastic material that simulates flesh and provides a biofidelic response to impact. The Q3s has a featureless face. The flesh is bonded directly to the skull and skull cap to ensure a proper fit and cannot be separated. The head cavity is large enough to allow use of several instruments, including linear accelerometers and angular velocity sensors.

Thorax

The thorax of the Q3s consists of a one-piece solid ribcage molded of polyurethane with a thin layer of polyvinyl chloride (PVC) ''skin'' bonded to the outer aspect. The ribcage is bolted to an aluminum spine. The molded part is contoured to take the shape of a human. The variable thickness of the part is purposefully designed so that, together with a properly selected polyurethane density, the thorax provides a biofidelic response to impact loading. An internally mounted IR–TRACC [17] measures the deflection of the

[12] The fore-aft neck targets had previously served as design targets for the Q-series (Irwin, AL and Mertz, HJ (1997), ''Biomechanical Basis for the CRABI and Hybrid III Child Dummies,'' Stapp Car Crash Journal V41: 1–12, SAE International, Warrendale, PA), while the shoulder targets were newly developed (Bolte, JH et al., (2003), ''Shoulder impact response and injury due to lateral and oblique loading,'' Stapp Car Crash Journal, V47, SAE International, Warrendale, PA). NHTSA's test results were reported in: Rhule, R (2008), Side impact child dummy development, 2008 SAE Government/Industry Meeting, Washington DC, May 2008. Download at: *http://www.nhtsa.gov/Research/Public+Meetings/SAE+2008+Government+Industry+Meeting* (last accessed March 25, 2013). OSRP results were reported in ISO committee meetings.

[13] Test results were reported in: Wang, ZJ (2009), Q3s improvement and Q6s development, 2009 SAE Government/Industry Meeting, Washington DC, Feb. 2009. Download at: *http://www.sae.org/events/gim/presentations/2009/jerrywang.pdf* (last accessed March 25, 2013).

[14] NHTSA's retrofit package included highly detailed specifications, including engineering drawings for fabrication of the neck component and response specifications for its dynamic performance.

[15] NHTSA has prepared and docketed a technical report, ''Evaluation of the Q3s Three Year Old Child Side Impact Dummy: Repeatability, Reproducibility, and Durability (2012),'' which includes a section that demonstrates the durability of the Q3s.

[16] The Q3s leg femur bone is constructed of polyurethane molded around a steel rod that reinforces the bone. The lower leg bone is made of polyurethane. Both the upper and lower leg bones are surrounded by moldings that simulate flesh. The feet have no bone structure or articulation. The Q3s's arms are a combination of plastics and metal. The elbow joint can be adjusted and set in a selected position. Vinyl/foam coverings surround the bones and hands are part of the lower arm covering.

[17] The Infra Red Telescoping Rod for Assessment of Chest Compression (IR–TRACC) was developed by General Motors, and first presented in: Rouhana SW., Elhagediab AM, Chapp JJ (1998), ''A high-speed sensor for measuring chest deflection in crash test dummies,'' Proceedings of the 16th International Technical Conference on the Enhanced Safety of Vehicles, Windsor, Ontario, Canada, May 31–June 4, 1998, Paper Number 98–S9–O–15, 1998.

lateral aspect of the ribcage relative to the spine. A neoprene suit fits over the torso, similar to a wetsuit.

Neck

The Q3s neck is a segmented design that consists of a column of three natural rubber segments bonded to four aluminum disks. A six-axis upper neck load cell is mounted at the neck/head interface. The rubber segments have an oval-like shape with circumferential V-shaped grooves. A safety cable made from wire rope runs through the center of the neck and provides axial resistance.

Shoulder

The Q3s shoulder design is molded from natural rubber into a hollowed, rectangular structure that allows controlled buckling when the shoulder is struck on the lateral aspect. The shoulder joint itself consists of a ball and socket in order to simulate the humerus-scapula joint. The upper arm has urethane flesh covering the entire outer surface of the arm which helps reduce the inertial peak from a pendulum impact. A string potentiometer is built into the shoulder assembly to measure the lateral deflection of the shoulder socket joint relative to the spine.

Spine

A short interface block connects the lower neck to the upper thoracic spine. The thoracic spine itself is a rectangular column machined from aluminum and about 140 mm long. It interfaces with a rubber cylindrical prism in the upper lumbar region. A short block connects the rubber lumbar column to the pelvis assembly.

Abdomen

The abdomen is similar to other ATDs in that it consists of a molded, foam-filled shell with a PVC outer skin. This shell is uninstrumented and fits between the ribcage and the pelvis.

Pelvis

The pelvis has two parts: A pelvic bone casting made of a zinc alloy encased snuggly within a molded polyurethane flesh. The pelvis casting is configured to accept an accelerometer array and a pubic subassembly accommodating a pubic load cell. The hip cups and femur heads are hardened aluminum.

Reversibility

The Q3s design incorporates reversibility features to accommodate the dummy's use for both left and right side impacts. In NHTSA's proposed upgrade to FMVSS No. 213, the Q3s could be used to test forward-facing and rear-facing CRSs. The sled system proposed for use by NHTSA would position the dummy for a left side impact when testing forward-facing CRSs, and for a right side impact when testing rear-facing CRSs. The PADI manual describes the steps to convert the instrumentation from a left to a right side impact.

b. Instrumentation

Table 1 contains a list of instrumentation needed to qualify the Q3s, i.e., the instrumentation needed for the dummy to meet the qualification requirements included in the proposed subpart W. Note that the FMVSS No. 213 side impact test that NHTSA is considering focuses on measuring head acceleration, using the three uni-axial accelerometers at the head center of gravity (C.G.), and chest deflection, using the IR–TRACC in the thorax. Nonetheless, the other instrumentation listed in the table would be needed for the qualification test to assess the performance of significant parts of the dummy and to ensure the soundness of the dummy as a whole. The Q3s accepts additional instrumentation other than that listed below, such as angular rate sensors in the dummy's head.

TABLE 1—REQUIRED INSTRUMENTATION TO QUALIFY THE Q3S DUMMY UNDER PART 572

Location	Measurement	Instrument
Q3s head C.G.	Acceleration	Accelerometer (3 req.).
Q3s upper neck	Forces and moments	Load cell.
Q3s thorax	Deflection	IR–TRACC.
Q3s shoulder	Deflection	String potentiometer.
Q3s lumbar spine	Forces and moments	Load cell.
Q3s pubic symphysis	Force	Load cell.
Qualification test equipment	Neck, lumbar rotation	Angular rate sensor (2 req.).

IV. Biofidelity

a. Anthropometry

The anthropometry and dummy segment mass properties of the Q3s were defined in the early design stage of the original Q3 based on TNO's data in its *C*hild *An*thropometric *Dat*abase (CANDAT).[18] For the most part, the same anthropometry and mass distributions have been retained all the way through to the Build Level D production version of the Q3s. The Q3s represents a 50th percentile three-year-old child, based on the data derived from CANDAT.

Biofidelity targets for a particular dummy are a function of its anthropometry and mass. Our assessment of the Q3s made use of biofidelity targets derived by SAE. These response targets were derived specifically for side impact dummies that have the same characteristic dimensions and masses as the Hybrid III family of dummies. Unlike the TNO studies used for the Q3s, the anthropometric basis of the Hybrid III three-year-old child dummy was derived by SAE using survey data of children in the United States only (Irwin and Mertz, 1997).[19] SAE also used slightly different assumptions to specify the body segment mass properties. Nonetheless, the SAE specifications for the anthropometry and mass of a three-year-old are very similar to those based on CANDAT. The Q3s generally matches up with SAE specifications as well as it does with CANDAT specifications.

[18] According to TNO publications (Beusenberg et al., 1993; Van Ratingen, et al., 1997), CANDAT is built upon various anthropometry surveys conducted in the United States, the Netherlands, Germany, and Japan from 1970–1993 of external dimensions and overall mass of children from birth up to 18 years old. Each survey source examined a different age group, and each had its own set of unique collection parameters. To handle gaps and inconsistencies within the source data, TNO applied regression routines and interpolation techniques to derive the anthropometry of a particular body segment size as a function of age or total body mass. Regression was based on the assumption that growth is a smooth and continuous process. The anthropometry surveys identified by TNO as the basis of CANDAT were performed by organizations other than TNO. CANDAT is the property of TNO and Humanetics.

[19] Irwin and Mertz (1997). Biomechanical Basis for the CRABI and Hybrid III Child Dummies. Stapp Car Crash Journal V41: 1–12, SAE International, Warrendale, PA.

There are small differences in body segment mass properties between the two ATDs due to differences in the manner in which TNO and SAE apportioned the segments. For instance, the TNO torso does not include parts of the thighs, whereas the SAE target does (the HIII–3C's thighs are included in a sitting form pelvis consistent with other Hybrid III dummies, which are built with a one-piece vinyl covering that fits around the pelvis and extends mid-thigh). Since the Q3s is not constructed in this way, its torso mass is lower than the SAE target because it includes only the torso, not part of the thighs. Conversely, the Q3s thigh mass is higher than the SAE target, since it includes more of the thigh segment.

The total body mass of the Q3s matches that of the HIII–3C, and is very close to the most recent Centers for Disease Control (CDC) growth charts.[20]

Table 2, below, provides the anthropometry and mass of various body segments for the Q3s along with the reference specifications of both CANDAT (TNO) and SAE. For reference, CDC data for height and total mass are footnoted in the table. (Note that, unlike the erect posture of CDC subjects, the reference posture of the Q3s is reclined and the pelvis angle reflects a child's seating position in a CRS. Also, the neck of the Q3s is angled such that the head is leveled when the dummy is seated. Thus, the Q3s height measurement is an approximation only because the dummy cannot be positioned in the same fully erect posture taken by children when their height is measured.)

The TNO and SAE specifications for anthropometry appear essentially the same. The anthropometry of the Q3s is also close to these specifications, with the exception of the chest depth and the waist circumference (both larger in the Q3s). As compared to a human, the Q3s torso is more rounded in order to provide greater internal space for the installation of the IR–TRACC. When struck laterally, the rounded torso also helps to give the dummy a biofidelic response in terms of the force needed to achieve proper chest deflection. For the waist, the difference reflects the seated reference posture of the Q3s as compared to the standing posture of children represented in CANDAT.

When comparing mass, Table 2 shows that the Q3s head is close to the TNO target, but it is light in comparison to the SAE target. For the neck, the Q3s also is aligned with the TNO target, but is light in comparison to the SAE. As discussed in the section below, these differences in anthropometry specifications are not significant in terms of the biofidelity of the Q3s under impact loading.

The other body segment masses shown in Table 2 (in italics) do not reflect a one-to-one comparison because of differences in apportioning. We note also that the mass of the upper extremities is lighter than the SAE value to compensate for the cumulative excess mass of the other dummy segments, to enable the total mass of the Q3s to be on target.

TABLE 2—Q3S ANTHROPOMETRY AND MASS COMPARED TO TNO AND SAE TARGETS

ANTHROPOMETRY (mm)	TNO	SAE	Q3s	% Difference, Q3s vs. SAE
*Standing height**	954	953	986	+3
Sitting height	551	546	556	+2
Shoulder height, sitting	340	334	340	+2
Shoulder breadth (max)	246	246	247	0
Hip breadth (seated)	194	193	202	+5
Head depth	177	177	180	+2
Head breadth	134	135	138	+2
Head circumference	500	498	502	+1
Chest breadth	161	173	174	+1
Chest depth	122	122	151	+24
Chest circumference, axilla	508	505	523	+4
Waist circumference	475	480	521	+9
Thigh height, sitting	78	84	86	+2
Buttock-knee length	293	284	305	+7
Shoulder-elbow distance	190	193	186	−4
Elbow to tip of finger	250	254	240	−6
MASS (kg)				
Total mass**	14.5	14.5	14.26	−2
Head	2.90	3.05	2.81	−8
Neck	0.30	0.40	0.31	−23
Torso assembly	6.20	6.61	5.78	−13
Upper extremities	3.50	1.82	1.41	−22
Lower extremities	1.50	2.63	3.55	+35

* Comparable reference: CDC 2000, 50th percentile three-year-old, standing fully erect:
boys: height=950 mm; total mass=14.3 kg
girls: height=940 mm; total mass=13.8 kg
**Total mass of Q3s includes its body suit, 0.40 kg.

[20] CDC growth charts for year 2000 are reported by Kuczmarski RJ, et al. (2002), 2000 CDC growth charts for the United States: Methods and development. National Center for Health Statistics.Vital Health Stat 11(246), 2002.

b. Biofidelity Assessment Under Dynamic Loading

Our assessment of the Q3s is based primarily on biofidelity targets established by SAE [21] for the head, neck, shoulder, thorax, and pelvis of a three-year-old. (A biofidelity target is the desired performance that a dummy should attain to be considered replicating the biomechanical response of a human.) In addition, we assessed the Q3s against additional shoulder targets based on tests carried out at Ohio State University (Bolte, 2003),[22] and against abdominal targets formulated by TNO.[23] For the most part, the biofidelity targets are based on pendulum impacts to body segments using cylindrical test probes suspended by wire.

Scaling of Adult Human Response Data

Biofidelity targets are based on observed human responses to impact loading. Generally, to assess a dummy's biofidelity, the human's response characteristics must be known. To assess adult dummies, adult post mortem human subjects (PMHS) are exposed to controlled forces, loads, and impacts and their responses are measured. However, biomechanical response data on children under impact loading is nonexistent or very limited, so other means must be used to estimate the human child's response characteristics.

Scaling adult PMHS data to the child's size using mass, anthropometry, and stiffness ratios represents the best available method of estimating the human child's response characteristics (see Irwin and Mertz, 1997 and Irwin, 2002, for details on the scaling theory and assumptions applied by SAE). Thus, scaling techniques were used to derive a set of biomechanical targets for the Q3s whereby adult PMHS data were scaled to a three-year-old child. The targets were determined by scaling the biomechanical responses observed for various body segments of the midsize adult male down to a three-year-old.

Given the lack of pediatric biomechanical data and the many assumptions made in the scaling process, there is greater uncertainty associated with child biofidelity targets compared to the adult targets from which they were derived. Therefore, NHTSA does not consider the biofidelity targets applied herein to be strict prerequisites to accept the dummy. Although biofidelity targets are central to evaluating the dummy, we have had to carefully analyze the findings to assess the biofidelity of the child ATD, judging, among other factors, the extent to which the child ATD met or missed the scaled target, and whether this would affect the usefulness of the ATD in its intended application.

Q3s Biofidelity Assessment

The agency has prepared a supporting document, ''Biofidelity Assessment of the Q3s Three-Year-Old Child Side Impact Dummy (July 2012),'' which provides a detailed discussion of the agency's biofidelity assessment, which is summarized below. A copy of the report has been placed in the docket for this NPRM. The report discusses the performance of the Q3s relative to the biofidelity targets.

A body part-by-body part synopsis of the biofidelity performance of the Q3s under dynamic loading is given below. For pendulum impacts, biofidelity is generally assessed as ''external'' or ''internal.'' External biofidelity is related to the force generated on the face of a pendulum impact probe upon striking a subject. In other words, probe forces generated by dummies are compared against probe forces generated by PMHS. Internal biofidelity is related to a measurement on or within the subject itself, such as shoulder deflection or spine acceleration, for which corresponding measurements are made on both the PMHS and the dummy.

Head

Given that the use of the Q3s in the FMVSS No. 213 side impact test under consideration would be to measure risk of head injury (using a linear acceleration-based head injury criterion, HIC), we consider head biofidelity to be highly important for the ATD. For the Q3s, we assessed head biofidelity in both frontal (Irwin and Mertz, 1997) and lateral (Irwin, 2002) orientations using Part 572-style head drop procedures. The responses of the Q3s head are well within the SAE corridors for both frontal and lateral drops, i.e., the responses wholly met the biofidelity target for the head.

Neck

The behavior of the neck in lateral flexion affects the overall motion of the head. We tested the Q3s neck to lateral flexion according to the SAE protocol (Irwin, et al., 2002), which uses a standard Part 572 neck pendulum to observe the moment-angle relationship. The Q3s neck response is entirely within the SAE corridors, completely meeting the biofidelity target.

We also assessed the biofidelity of the Q3s neck in frontal flexion (Irwin and Mertz, 1997). In the frontal flexion assessment, we found that the Q3s neck data generally follows the shape of the corridor of the biofidelity target, although the curve is not completely contained within the corridor. Given that neck flexion occurs mainly in the lateral direction under the intended use of the dummy, a slight nonconformity in frontal flexion is not disconcerting. On balance, we find the biofidelity of the Q3s neck to be satisfactory for use in our CRS side impact safety standard under consideration.

Shoulder

Although there is no shoulder IARV being contemplated for the Q3s, the shoulder does interact with the CRS during the test procedure under consideration for FMVSS No. 213. In view of this, NHTSA evaluated the biofidelity of the Q3s shoulder in component testing under the loading of a pendulum.

The unpadded test involved the SAE protocol (Irwin, 2002), which uses a rigid pendulum in a pure lateral direction. Response criteria included corridors for lateral shoulder displacement and for probe force. The Q3s shoulder showed high stiffness with respect to lateral shoulder displacement and probe force under this test protocol.

Next we reexamined shoulder biofidelity under conditions that correspond more closely to the intended use of the Q3s in the FMVSS No. 213 test procedure being contemplated: Those of the Ohio State protocol (Bolte et al., 2003), which uses the same impactor mass and speed as the SAE test but with foam padding attached to the impactor face. The latter condition was considered because the FMVSS No. 213 impact being contemplated exposes the Q3s to the padded side structure

[21] NHTSA has evaluated the SAE targets and is satisfied with the technical bases underlying them. The SAE targets were derived systematically using a defined process. The scaling theories as well as the underlying anthropometric and biomechanical test data have all been vetted and released to the public domain. SAE methods have been used by NHTSA to assess the biofidelity of the majority of Part 572 ATDs and we find them to be sound, data-driven, and well-founded scientifically.

[22] The test procedure and biofidelity targets are described in: Bolte JH, Hines NH, Herriot RG, Donnelly BR, McFadden JD (2003). Shoulder impact response and injury due to lateral and oblique loading, Stapp Car Crash Journal, V47, SAE International, Warrendale, PA.

[23] We have used this TNO biofidelity target because there is none for the Q3s abdomen developed by the SAE. We have not used the TNO biofidelity targets for the head, neck, shoulder, thorax, and pelvis because they are derived from assumptions and underlying data within CANDAT, some of which have not been made fully accessible to the public. Thus, due to the transparency and reliability of the SAE targets and because the TNO targets cannot be fully judged to the same degree that SAE targets can be, we have decided to use primarily the SAE targets in assessing the biofidelity of the Q3s.

(''wing'') of the child restraint in the test.

Under the Ohio State protocol, test results also indicate that the shoulder of the Q3s is stiff when assessed for biofidelity as measured by its internal deflection. However, the force response of the padded probe (external biofidelity) nearly matches the target. As such, the Q3s shoulder appears to be biofidelic in the manner in which it would exert force on the child restraint system. This loading of the child restraint, which would affect the overall motion of the dummy's upper torso and head (through which the FMVSS No. 213 injury criteria under consideration would be measured), appears representative of an actual human.

Thorax

The biofidelity of the thorax under lateral loading is an important performance target for the Q3s since the agency is considering a proposal to adopt thorax deflection as an injury assessment reference value (IARV) in the FMVSS No. 213 side impact test. Thorax biofidelity is assessed via high (6.0 m/s) and low (4.3 m/s) speed pendulum impacts prescribed by SAE. Pendulum force corridors are used to assess the external biofidelity of the dummy, and upper torso (T1) acceleration is used to assess internal biofidelity. (SAE did not develop a biofidelity target based on thorax deflection because PMHS in the underlying tests were not instrumented as such.)

Test results indicate that the pendulum forces generated by the Q3s are within the corridors for both high and low speed tests. The magnitude of the internal T1 acceleration is also on target, though it is slightly out of phase with the biofidelity corridor (i.e., the peak magnitude is within the limit afforded by the corridor, but it occurs about 10 ms too early). We believe this phase difference, which is related to the mechanics of human thoracic tissues vs. the Q3s polymer thorax, is an acceptable compromise in producing a dummy that is affordable, durable, and otherwise practicable for use as a regulatory tool.

Abdomen

We assessed the biofidelity of the abdomen in an oblique pendulum impact using probe force targets established by TNO. This assessment was carried out with the probe striking the antero-lateral aspect of the dummy rather than the full lateral aspect because neither TNO nor SAE had established biofidelity targets for the latter. Furthermore, abdominal biofidelity is important mostly in frontal impacts in relation to lap belt loading. Since the Q3s would primarily be used in side impacts to test CRSs having an internal harness, abdominal loads are not expected to be excessive. Nonetheless, the loading to the abdomen in the FMVSS No. 213 testing under consideration may have some frontal component, with the resultant loading being oblique. Therefore, the biofidelity assessment was performed with an oblique impact. The Q3s performed very favorably when examined against the TNO established targets.[24]

Moreover, noting that an assumption was made by TNO that the child abdomen is stiffer than the adult, NHTSA re-formulated the corridor by assuming that abdomen stiffness is a function of the elastic modulus of soft tissue, and that child and adult moduli are the same. (This assumption was also employed in developing the SAE corridors for other body regions.) When compared against the re-formulated corridor, the Q3s performs a little less favorably, but still follows along the upper bound of the corridor. Details of this comparison are provided in our supporting document, ''Biofidelity Assessment of the Q3s Three-Year-Old Child Side Impact Dummy,'' supra at p. 17.

Pelvis

The external biofidelity of the pelvis was assessed using an SAE pendulum impact protocol (lateral impact of 2.27 kg rigid impact probe at 4.5 m/s) and pendulum force limits. The test results indicate that the Q3s pelvis appears stiff relative to a child. The dummy had been redesigned with hardened aluminum hips replacing plastic ones to improve its durability, and this change may have resulted in a greater force response. Nonetheless, in our repeatability and reproducibility testing with Cozy Cline CRSs (discussed later), the wide scatter in pelvis response did not seem to have any effect on HIC15 and chest deflection. Further, the tradeoff in biofidelity for improved durability may be necessary for use of the dummy in a regulatory environment.

[24] The TNO targets are based on a scaling of adult PMHS data in which subjects were struck in the abdomen by a pendulum aligned 30 degrees from lateral (i.e., an oblique impact). The PMHS data is from a test series where subjects initially underwent thoracic impacts and then were re-used for abdominal impacts. The thoracic impact data were used to establish thorax corridors in the ISO 9790 Technical Report, the underlying source document upon which the SAE three-year-old targets have been derived. The repeat abdominal tests, however, were not used by ISO and thus no SAE targets are provided for abdominal biofidelity subjected to pendulum impacts.

Summary

Our biofidelity assessment of the Q3s is based on head drops and pendulum tests, which have demonstrated the biofidelity of the test dummy. Our test results indicate that the biofidelity of the Q3s is most satisfactory for the head, thorax, and neck. It is in these three body segments where proper biofidelity is most critical for the intended use of the dummy in the FMVSS No. 213 test procedure under consideration.

Relative to humans, the dummy appears to be stiff in the shoulder and pelvis. For a CRS under test, the shoulder and pelvis could conceivably act as load paths such that the thorax deflection in the Q3s may be unrealistically low relative to a human. However, it may not be feasible to engineer a biofidelic design into the shoulder and pelvis at this time without sacrificing some other critical performance features, such as durability. While a child test dummy with a more biofidelic shoulder and pelvis may be developed in the future, the agency tentatively concludes that the Q3s is a suitable and valuable test device for use in child restraint side impact testing at this time. On balance, the agency is satisfied with the overall biofidelity of the Q3s.

V. Repeatability and Reproducibility

A test dummy's repeatability and reproducibility (R&R) is demonstrated in sled tests and component tests. Sled tests establish the consistency of the dummy's kinematics, its impact response as an assembly, and the integrity of the dummy's structure and instrumentation under controlled and representative crash environment test conditions. In component tests, the impact input as well as the test equipment is carefully controlled to minimize external effects on the dummy's responses. NHTSA has assessed the repeatability and reproducibility of the Q3s in CRS side impact sled tests and in component tests.

Repeatability is defined as the similarity of responses from a single dummy when subjected to multiple repeats of a given test condition. Reproducibility is defined as the similarity of test responses from multiple dummies when subjected to multiple repeats of a given test condition. A quantitative assessment of R&R is achieved using a statistical analysis of variance. The percent coefficient of variation (%CV) is a measure of variability expressed as a percentage of the mean. The %CV is calculated as follows:

$$\%CV = \frac{\sigma}{\overline{X}} \times 100$$

Where σ = standard deviation of responses [25]
$\overline{X}$ = mean of responses

We have used a %CV scale shown in Table 3 to assess the quality of repeatability and reproducibility of the Q3s. This approach was first introduced by NHTSA as a means of evaluating dummy repeatability when the original subpart B Hybrid II 50th percentile male ATD was proposed (40 FR 33466, August 8, 1975). Since then, the agency has used this approach for other 49 CFR Part 572 rulemakings, including those to adopt side impact dummies such as the ES–2re midsize adult male side impact dummy (subpart U, 71 FR 75304, December 14, 2006) and the SID–IIs 5th percentile adult female side impact dummy (subpart V, 71 FR 75342, December 14, 2006).

TABLE 3—%CV SCORE CATEGORIZATION FOR REPEATABILITY AND REPRODUCIBILITY

Repeatability % CV Score	Reproducibility % CV Score	Assessment
%CV ≤ 5	%CV ≤ 6	EXCELLENT.
5 < %CV ≤ 8	6 < %CV ≤ 11	GOOD.
8 < %CV ≤ 10	11 < %CV ≤ 15	MARGINAL.
%CV > 10	%CV > 15	POOR.

For repeatability and reproducibility assessments, acceptable limits are ''MARGINAL'' and above. For repeatability, the MARGINAL limit is set at a %CV value of 10 percent. For MARGINAL reproducibility, a slightly greater %CV of 15 percent is used since multiple dummies produce a wider dispersion of response measurement than in testing a single dummy for repeatability. These limits were most recently used in adopting the HIII–10C 10-year-old child dummy into 49 CFR Part 572 (subpart T, 77 FR 11651, February 27, 2012). All R&R values in the ''POOR'' category were investigated to assess the cause of the high variance. If needed, corrective measures were made to the dummy.

a. R&R in Sled Tests

In the sled tests, a CRS was mounted on a generic bench seat which was allowed to slide into a padded wall, generating lateral impact loading on the CRS and the Q3s dummy. The deceleration pulse of the sliding bench seat was controlled by the crush of aluminum honeycomb. The peak lateral acceleration of the test buck was approximately 25.4 g and the peak velocity was 31.4 km/h (19.5 mph).[26] The configuration and sled pulse generally corresponded to the procedure under consideration for the FMVSS No. 213 side impact test, except the loadwall had a uniform surface.

To assess the R&R of the Q3s in sled tests, two dummies were each tested five times using the sliding seat sled buck. The simulated wall padding was replaced after each test. Two sets of seat padding for the sliding bench were alternated after each test. The locations of multiple dummy landmarks were measured before each test to minimize test-to-test variation in the dummy's seated position.

All tests were performed with identical forward-facing Graco Cozy Cline child restraints, with a new child restraint used for each test. These child restraints were sold for children weighing 9 to 18 kg (20 to 40 lb). In CRS tests performed in support of NHTSA's proposed rulemaking to add a side impact test to FMVSS No. 213, the Cozy Cline child restraint produced Q3s metrics that were generally high relative to those produced by other CRSs. Thus, we chose to evaluate the R&R of the Q3s with the Cozy Cline child restraint because the data indicated that these child restraints more vigorously exercised the dummy's assessment of the injury criteria of interest compared to other CRSs we have tested.

The sled test results indicated ''GOOD'' to ''EXCELLENT'' repeatability and reproducibility.[27] The statistical analysis of select measurements in all tests for each dummy and both dummies combined is summarized in Table 4. NHTSA has prepared and docketed a technical report, ''Evaluation of the Q3s Three Year Old Child Side Impact Dummy: Repeatability, Reproducibility, and Durability (2012),'' which discusses the test procedures and results in greater detail. The report also provides references for the location of the test data including sensor signals and videography.

TABLE 4—SUMMARY OF SLED TEST RESPONSES FOR SELECT CHANNELS

Used for:	Parameter	Dummy S/N 006			Dummy S/N 007			Combined Data		
		Avg	Std dev	% CV	Avg	Std dev	% CV	Avg	Std dev	% CV
FMVSS [1]	HIC15	700	14.8	2	708	19.4	3	704	16.8	2
P572 [2] & FMVSS [1]	Thorax Y-Disp, mm	34	0.8	2	33	2.8	9	34	2.0	6
Part 572 [2]	Head Res-Accel, g	97	2.1	2	96	2.0	2	96	2.0	2
R&D [3]	Neck Y-force, N	744	56.5	8	687	57.3	8	716	61.4	9
Part 572 [2]	Neck X-Moment, Nm	31	3.8	12	28	2.3	8	29	3.4	12
Part 572 [2]	Shoulder Y-Disp, mm	24	1.0	4	24	0.8	3	24	0.8	4
R&D [3]	Up spine Res-Accel, g	65	3.3	5	65	8.2	13	65	5.9	9
R&D [3]	Lumbar Y-Force, N	324	20.7	6	343	38.8	11	333	31.0	9
R&D [3]	Pelvis Res-Accel, g	101	15.8	16	106	22.9	22	104	18.7	18

[25] Standard deviations are based on a sample and calculated using the ''n-1'' method.

[26] The acceleration of the test buck is intended to mimic the impulse experienced by a CRS installed in the rear seat of a small passenger vehicle subjected to a side impact by a moving deformable barrier as specified in FMVSS No. 214, ''Side impact protection.''

[27] Qualification tests were performed on each dummy before and after the sled test series to evaluate the Q3s's durability. The dummies met all of the preliminary qualification response requirements, both before and after the sled series.

TABLE 4—SUMMARY OF SLED TEST RESPONSES FOR SELECT CHANNELS—Continued

Used for:	Parameter	Dummy S/N 006			Dummy S/N 007			Combined Data		
		Avg	Std dev	% CV	Avg	Std dev	% CV	Avg	Std dev	% CV
Part 572 [2]	Pubic Y-Force, N	388	43.4	11	324	75.5	23	356	67.1	19

[1] CRS requirement under consideration for a FMVSS No. 213 side impact test.
[2] Qualification for proposed Part 572.
[3] Injury assessment for research and development (R&D) only.

The following discusses the sled test results that relate to responses of primary importance to the dummy's use in side impact, i.e., primarily measurements under consideration for use in the FMVSS No. 213 side impact test, and measurements that would serve as Part 572 qualification targets. Other measurements commonly examined in research efforts are also discussed below.

Head Acceleration and HIC15

As seen in Table 4, head acceleration and HIC15 both displayed ''EXCELLENT'' repeatability and reproducibility. Since these responses are being considered as injury criteria for our CRS side impact requirements, we believe it is very important for these responses to exhibit a high degree of repeatability. It is notable that the average HIC15 value was 704. This value exceeds the IARVs under consideration for our CRS requirements, thus demonstrating that the dummy has very good R&R up to and beyond the expected pass/fail limit.

Thorax Deflection

Thorax deflection (labeled ''Thorax Y-Disp'' in Table 4), as measured by the IR–TRACC, also displayed ''EXCELLENT'' reproducibility when the responses of both dummies were combined. The average measurement of 34 mm exceeds the IARVs under consideration for our CRS requirements, which attests to the reliable performance of the dummy at pass/fail limits.

We note that for dummy serial number 007, the thorax y-displacement is only ''MARGINAL.'' Closer inspection of the lateral thorax displacement data indicates that the response for one of the tests was quite different than that of the previous four tests. Our review of the pre-test positioning data revealed that in test 5, the dummy's elbow location relative to other body landmarks was farthest away from the average location. We believe that the elbow position relative to the dummy's torso played a critical role in the amount of subsequent lateral thorax displacement. Because these data show an apparent sensitivity to elbow positioning, the agency has developed a procedure to position the elbow at a specific angle relative to the thorax.

Neck Y-Force and X-Moment

Neck Y-force and X-moment responses exhibited ''GOOD'' and ''MARGINAL'' reproducibility, respectively. A closer inspection of the data indicates that the peak neck force in one of the tests for dummy serial number 006 was about 40 percent lower than the other four tests, for reasons that could not be determined by the test technicians. If test 3 were removed from the dataset, the repeatability of dummy 006 for neck X-moment becomes ''EXCELLENT'' and the overall reproducibility becomes ''GOOD.''

Shoulder Y-Displacement

The shoulder displacement, as measured by the Q3s's internal string potentiometer, also displayed ''EXCELLENT'' repeatability in both dummies as well as in its overall reproducibility when the responses of both dummies are combined. Although there is no IARV associated with shoulder displacement, the average measurement of 24 mm is fairly high in comparison to the values obtained in research tests from other tested CRSs. Again, this attests to the good performance of the dummy in conditions beyond those to which the ATD will typically be exposed in an FMVSS No. 213 compliance test.

Upper Spine Acceleration

The overall reproducibility of both dummies combined was ''GOOD,'' although the upper spine resultant acceleration for dummy 007 displayed ''POOR'' repeatability. However, as with the lateral thorax displacement responses, the upper spine acceleration for test 5 of dummy 007 was anomalous as compared to the previous four tests. We believe that this result is related to the issue of arm position. We note that if test 5 were removed from the dataset, the ''POOR'' repeatability of dummy 007 for upper spine acceleration becomes ''EXCELLENT'' and the overall reproducibility also becomes ''EXCELLENT.''

Pelvis Resultant-Acceleration, Lumbar Y-Force, and Pubic Y-Force

Poor repeatability was observed in the pelvic and lumbar responses. Pelvis resultant acceleration response curves revealed a sharp spike in the data around 90 ms. These spikes obscured the true data peaks, which occurred around 85 ms, and therefore present a negative effect on the repeatability analysis. A similar spike, of lesser magnitude, was evident in the lumbar Y-force responses, also around the 90 ms mark of the event.

The source of the data spikes were subsequently determined by NHTSA to emanate from ''knee knock.'' The dummy's knees are hard plastic components, and they contacted each other precisely at the instant that the spikes occurred in the pelvis acceleration and lumbar Y-force channels. This condition has since been mitigated in the final Q3s design which incorporates a padded covering over the medial aspect of the knees to dampen the force of impact.

The repeatability of the pubic Y-force measurement was also shown to be ''POOR.'' This rating is not attributed to the knee knock condition. Rather, pubic Y-force appears to be a measurement that is highly sensitive to any variation in the test conditions. Nonetheless, variations in pubic Y-force do not appear to affect the dummy's head acceleration and thorax Y-displacement (the IARVs we are exploring for the FMVSS No. 213 side impact test under consideration), which exhibited low variability despite the scatter in pubic force.

Supplemental Tests

In consideration of the ''MARGINAL'' performance observed for some of the responses in the previous sled test series, we ran another series of Cozy Cline tests with the final version of the Q3s. The final Q3s incorporated the aforementioned pads on the medial surfaces of the knees as well as a simplified design of the neck center cable. The older cable design was

thought to contribute to the non-uniformity observed in the earlier sled tests. Additionally, we added a padded door panel and positioned the arm at 25 degrees to be more consistent with what is under consideration for the proposed side impact test protocol.

The results for this supplemental test series are shown in Table 5. As compared to the previous set of tests shown in Table 4, the supplemental series demonstrate improved repeatability in measurements of shoulder and thorax deflection, neck loads, and pelvis acceleration. These improvements are directly related to a new arm positioning protocol, the revised neck center cable, and the elimination of knee knock, respectively.

Pubic force repeatability was again rated as ''POOR.'' Since the revisions to the dummy and test protocol were not aimed at improving this measure, the ''POOR'' rating was not unexpected.

TABLE 5—SUMMARY OF SUPPLEMENTAL SLED TEST RESPONSES FOR SELECT CHANNELS

Used for:	Parameter	Dummy S/N 004		
		Avg	Std dev	% CV
FMVSS [1]	HIC15	795	22.2	3
P572 [2] & FMVSS [1]	Thorax Y-Disp, mm	17.8	0.7	4
Part 572 [2]	Head Res-Accel, g	110	3.6	3
R&D [3]	Neck Y-force, N	630	42	7
Part 572 [2]	Neck X-Moment, Nm	28.0	1.9	7
Part 572 [2]	Shoulder Y-Disp, mm	24.3	0.5	2
R&D [3]	Up spine Res-Accel, g	129	6.8	5
R&D [3]	Lumbar Y-Force, N	765	69	9
R&D [3]	Pelvis Res-Accel, g	97.1	8.5	9
Part 572 [2]	Pubic Y-Force, N	557	118	21

[1] CRS requirement under consideration for a FMVSS No. 213 side impact test.
[2] Qualification for proposed Part 572.
[3] Injury assessment for research and development (R&D) only.

b. R&R in Component Qualification Tests

Test dummies specified in 49 CFR Part 572 are subjected to a series of qualification tests to ensure that their components are functioning properly. The qualification tests proposed for the Q3s are discussed further in a later section. We have proposed qualification tests for the dummy's head, neck, shoulder, thorax, lumbar, and pelvis, assessing 35 response mechanisms for the dummy.

We tested NHTSA's four Q3s units to the proposed qualification tests, assessing among other matters the performance of the units when tested to the qualification tests, and the repeatability and reproducibility of the dummies. The findings are discussed in the technical report, ''Evaluation of the Q3s Three Year-Old Child Side Impact Dummy: Repeatability, Reproducibility, and Durability,'' *supra.*

R&R in the component qualification tests were assessed by testing the four Q3s dummies, all conforming to the latest available revision level. Tests were run for both right and left side impacts. Average, standard deviation, and coefficient of variation were computed for each required measurement parameter of each qualification procedure. We used the same guidelines to rate R&R as was used previously in our R&R evaluation using sled tests (see Table 3, *supra*).

Head Drop Tests

Head qualification consisted of two test components: Frontal and lateral head drops. The frontal head drop was conducted from a height of 376 mm, while the lateral head drop was conducted at 200 mm.

Four Q3s dummy heads were each subjected to six frontal head drops, five left-side lateral drops, and five right-side lateral drops. The responses are summarized in Table 6 for frontal drops and in Table 7 with left- and right-side tests combined. Each individual head was rated as having ''EXCELLENT'' repeatability in both the frontal and lateral modes. When combining the responses, the reproducibility of all four heads was also rated as ''EXCELLENT'' in both the frontal and lateral test modes.

TABLE 6—SUMMARY OF FRONTAL HEAD DROP RESPONSES

Dummy S/N		Resultant accel (g)
004	avg	273.0
	stdev	3.86
	%CV	1.41
006	avg	276.5
	stdev	2.48
	%CV	0.90
007	avg	282.0
	stdev	4.35
	%CV	1.54
008	avg	263.5
	stdev	5.12
	%CV	1.94
All	avg	273.8

TABLE 6—SUMMARY OF FRONTAL HEAD DROP RESPONSES—Continued

Dummy S/N		Resultant accel (g)
	stdev	7.68
	%CV	2.80

TABLE 7—SUMMARY OF LATERAL HEAD DROP RESPONSES

Dummy S/N	Orientation L&R	Resultant accel (g)
004	Avg	131.3
	Stdev	3.50
	%CV	2.67
006	Avg	124.7
	Stdev	3.64
	%CV	2.92
007	Avg	127.1
	Stdev	3.92
	%CV	3.08
008	avg	123.2
	stdev	4.08
	%CV	3.31
All	avg	126.6
	stdev	4.78
	%CV	3.78

Neck Pendulum Tests

Flexion Tests. The two flexion tests utilized the Part 572 neck pendulum and a headform designed to mimic the inertial properties of the head (Part 572, Subpart E, Figure 22). The frontal flexion test was at a 4.7 m/s impact speed and the lateral test was at a 3.8 m/s speed. Both tests prescribed a deceleration pulse. For the frontal

flexion tests, four Q3s dummy necks were subjected to five tests. For lateral flexion, each of the four necks was subjected to five left-side tests and five right-side tests.

The responses are summarized in Table 8 (frontal flexion) and Table 9 (lateral flexion). For the frontal flexion and lateral flexion tests, each individual neck provided ''EXCELLENT'' repeatability for all criteria considered. Reproducibility was also ''EXCELLENT'' for all four necks combined.

Neck Torsion. During CRS testing, the Q3s neck may flex with varying degrees of neck twist. We have therefore developed a procedure to assure that the neck is repeatable under twist. The new neck torsion test uses a special test fixture attached to the Part 572 pendulum, which imparts a pure torsion moment to the isolated neck. The test specifies a 3.6 m/s impact speed with a defined deceleration pulse. Each of the four Q3s dummy necks was subjected to five left-side tests and five right-side tests. The responses are summarized in Table 10 with left- and right-side tests combined. Each individual neck provided ''EXCELLENT'' repeatability for all criteria considered. Reproducibility was also ''EXCELLENT'' for all four necks combined.

TABLE 8—SUMMARY OF FRONTAL FLEXION NECK PENDULUM TEST RESPONSES

Dummy S/N		Max angle		Peak Y-moment		Head rotation decay time, ms
		angle deg	time ms	moment N-m	time ms	
004	Avg	77.1	58.5	47.1	54.3	52.2
	stdev	0.42	0.62	0.63	1.02	0.10
	%CV	0.55	1.06	1.35	1.88	0.20
006	Avg	77.5	59.3	46.0	56.1	52.2
	stdev	0.74	0.84	1.10	1.89	0.20
	%CV	0.96	1.42	2.40	3.38	0.38
007	Avg	74.3	58.3	46.8	55.7	51.3
	stdev	0.79	0.70	0.71	1.47	0.17
	%CV	1.07	1.20	1.51	2.64	0.34
008	Avg	74.8	57.9	46.9	54.2	51.2
	stdev	0.69	0.65	1.90	1.10	0.23
	%CV	0.92	1.12	4.04	2.03	0.45
All	Avg	76.1	58.7	46.4	55.5	51.7
	stdev	1.77	1.12	1.50	2.00	0.48
	%CV	2.33	1.90	3.23	3.61	0.93

TABLE 9—SUMMARY OF LATERAL FLEXION NECK PENDULUM TEST RESPONSES

Dummy S/N	Orientation L&R	Max angle		Peak X-moment		Head rotation decay time, ms
		angle deg	time ms	moment N-m	time ms	
004	avg	83.3	68.8	28.4	69.5	66.6
	stdev	0.53	0.60	1.48	0.78	0.53
	%CV	0.63	0.87	5.23	1.13	0.79
006	avg	85.2	69.9	28.8	70.6	66.8
	stdev	0.32	0.64	0.82	0.55	0.68
	%CV	0.37	0.91	2.84	0.77	1.01
007	avg	81.0	68.0	27.7	69.4	65.5
	stdev	0.44	0.79	0.59	0.90	0.60
	%CV	0.55	1.16	2.14	1.29	0.92
008	avg	81.7	67.7	27.9	68.8	65.8
	stdev	0.73	0.56	0.71	0.70	0.87
	%CV	0.89	0.82	2.53	1.02	1.32
All	avg	82.8	68.6	28.2	69.6	66.2
	stdev	1.69	1.08	1.05	0.98	0.86
	%CV	2.04	1.57	3.72	1.41	1.30

TABLE 10—SUMMARY OF TORSIONAL NECK PENDULUM TEST RESPONSES

Dummy S/N	Orientation L&R	Max angle		Peak Z-moment		Head rotation decay time, ms
		angle deg	time ms	moment N-m	time ms	
004	avg	84.9	102.3	9.0	96.2	93.8
	stdev	0.39	0.51	0.03	0.82	0.64
	%CV	0.46	0.50	0.28	0.85	0.68
006	avg	89.7	108.4	8.3	102.1	99.0
	stdev	0.53	0.52	0.07	2.03	0.51
	%CV	0.59	0.48	0.84	1.99	0.52
007	avg	80.7	98.7	9.2	90.8	89.8
	stdev	1.22	0.60	0.31	1.39	1.05
	%CV	1.51	0.61	3.35	1.53	1.17

TABLE 10—SUMMARY OF TORSIONAL NECK PENDULUM TEST RESPONSES—Continued

Dummy S/N	Orientation L&R	Max angle		Peak Z-moment		Head rotation decay time, ms
		angle deg	time ms	moment N-m	time ms	
008	avg	81.3	99.3	9.0	91.9	90.9
	stdev	1.50	0.72	0.08	0.78	0.77
	%CV	1.85	0.72	0.84	0.85	0.84
All	avg	84.2	102.2	8.9	95.2	93.4
	stdev	3.71	3.89	0.37	4.64	3.62
	%CV	4.40	3.80	4.21	4.87	3.88

Shoulder Impact

This test assures that the shoulder acts uniformly in the way it deforms under load and distributes the load under a direct lateral impact, thus helping to assure that whole-body kinematics of the ATD are consistent.

Shoulder tests consisted of a lateral impact to the shoulder using a 3.8 kg probe at an impact speed of 3.6 m/s. Each of the four Q3s dummies was impacted five times on both their left and right shoulders. The responses are summarized in Table 11 with left- and right-side tests combined. The shoulder responses for each individual dummy were rated as having ''EXCELLENT'' repeatability. The reproducibility of shoulder responses for all four dummies combined was also rated as ''EXCELLENT.''

TABLE 11—SUMMARY OF SHOULDER TEST RESPONSES

Dummy S/N	Orientation L&R	Shoulder displacement (mm)	Probe force (N)
004	Avg	18.4	1281.5
	Stdev	0.47	27.99
	%CV	2.57	2.18
006	Avg	19.0	1270.3
	Stdev	0.35	12.91
	%CV	1.84	1.02
007	Avg	18.8	1295.0
	Stdev	0.46	13.55
	%CV	2.46	1.05
008	Avg	18.6	1280.1
	Stdev	0.83	10.75
	%CV	4.48	0.84
All	Avg	18.7	1281.7
	Stdev	0.58	19.16
	%CV	3.12	1.50

Thorax Impacts

The thorax qualification tests were conducted two ways: Without arm interaction (as in the SAE test) and with the arm attached and down such that the impact probe strikes the upper arm. Both tests utilized a lateral impact with a 3.8 kg probe.

In the ''thorax without arm'' test, the arm was completely removed from the dummy. The 3.8 kg test probe was aligned with the thorax displacement IR–TRACC and impacted the thorax laterally at a speed of 3.3 m/s. Each of the agency's four dummies was impacted five times on both the left and right sides. Table 12 below provides a summary of the responses with left- and right-side tests combined.

TABLE 12—SUMMARY OF THORAX WITHOUT ARM QUALIFICATION TEST RESPONSES

Dummy S/N	Orientation L&R	Thorax displacement (mm)	Probe force (N)
004	avg	27.3	705.2
	stdev	0.45	15.52
	%CV	1.66	2.20
006	avg	28.6	665.1
	stdev	0.77	27.83
	%CV	2.69	4.18
007	avg	28.1	692.1
	stdev	0.19	22.92
	%CV	0.67	3.31
008	avg	26.3	710.9
	stdev	0.19	19.51
	%CV	0.70	2.74
All	avg	27.6	693.3

TABLE 12—SUMMARY OF THORAX WITHOUT ARM QUALIFICATION TEST RESPONSES—Continued

Dummy S/N	Orientation L&R	Thorax displacement (mm)	Probe force (N)
	stdev	1.00	27.63
	%CV	3.63	3.99

For the ''arm attached'' test, the upper arm was positioned vertically and aligned with the dummy's thorax. The lower arm was positioned to make a 90 degree angle with the upper arm. The impact speed of the probe was 5.0 m/s.

Each of the four test dummies was impacted five times on both the left and right sides. Table 13 provides a summary of the test results with left- and right-side tests combined.

TABLE 13—SUMMARY OF THORAX WITH ARM ATTACHED QUALIFICATION TEST RESPONSES

Dummy S/N	Orientation L&R	Thorax displacement (mm)	Peak probe force after 5 ms (N)
004	avg	26.0	1527.5
	stdev	0.63	28.58
	%CV	2.41	1.87
006	avg	26.3	1567.1
	stdev	0.55	46.47
	%CV	2.09	2.97
007	avg	25.9	1512.7
	stdev	0.37	60.32
	%CV	1.44	3.99
008	avg	25.2	1542.3
	stdev	0.48	45.96
	%CV	1.92	2.98
All	avg	25.9	1537.4
	stdev	0.64	49.28
	%CV	2.46	3.21

For thorax impacts both with and without the arm, each dummy was rated as having ''EXCELLENT'' repeatability. Furthermore, the responses of all four dummies combined produced a rating of ''EXCELLENT'' reproducibility.

Note that the peak probe force was taken after 5 ms to separate the probe's initial inertial response during arm contact from the probe's response due to its interaction with the thorax. The typical probe force response curve exhibited dual peaks of nearly equal magnitude, with the first peak occurring upon initial impact of the probe with the arm and the second peak occurring as the arm loaded the thorax (see Figure 1 below). Analysis of the response curves indicated that the first peak typically occurred before 5 ms, and the second peak occurred after 5 ms. Because the second peak is more closely related to the resistive force of the thorax, we concluded that the first peak was not determinative.

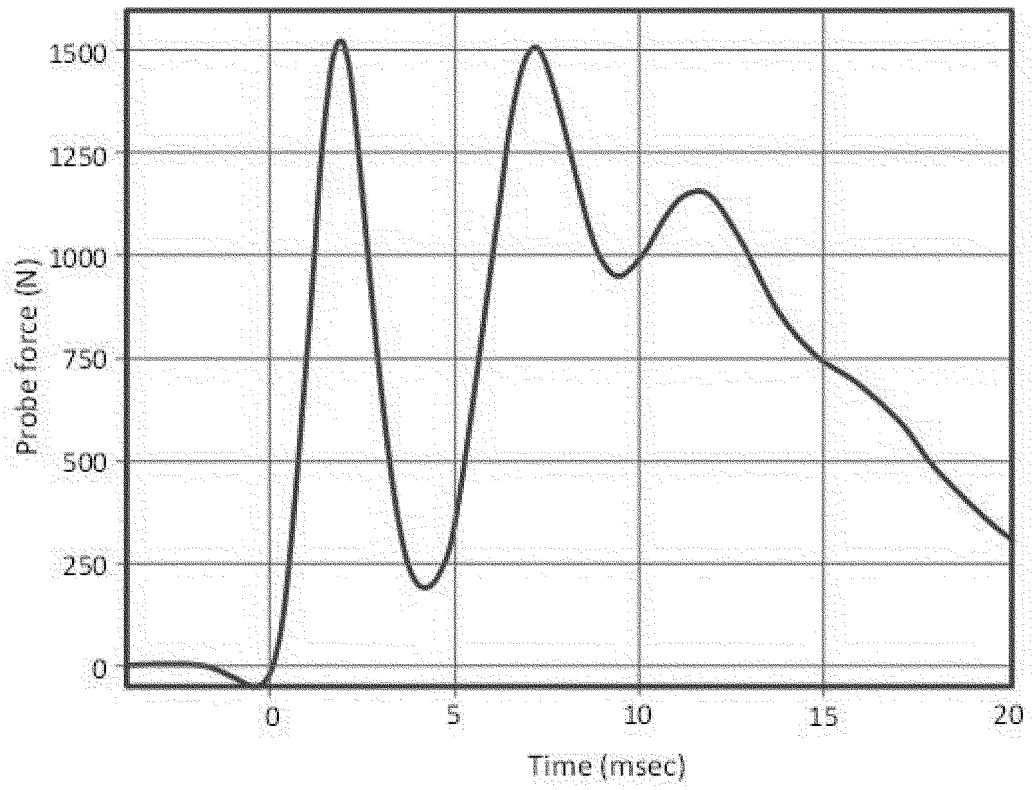

Figure 1. Typical Probe Force Response for Thorax with Arm Impact

Lumbar Pendulum Tests

Lumbar testing consisted of two types of pendulum tests: A frontal test and a lateral test. For both tests, the lumbar spine element containing the flexible column was removed from the dummy similar to the neck qualification tests. Lumbar tests were conducted using the same Part 572 neck pendulum and the headform device utilized in the neck qualification tests. Frontal and lateral tests were conducted at an impact speed of 4.4 m/s.

Five frontal tests were carried out on lumbar elements from each of the four test dummies. For the lateral tests, five were conducted on the left side and five on the right side. The results are summarized in Table 14 (frontal) and Table 15 (lateral) with left- and right-side tests combined. The repeatability of each lumbar element was rated as either ''EXCELLENT'' or ''GOOD'' for all test measurements. The reproducibility of responses of all four lumbar elements combined was ''EXCELLENT'' for all measurements.

TABLE 14—SUMMARY OF FRONTAL LUMBAR PENDULUM TEST RESPONSES

Dummy S/N		Max angle		Peak Y-moment		Head rotation decay time, ms
		angle deg	time ms	moment N-m	time ms	
004	avg	52.8	55.1	84.2	51.2	53.8
	stdev	1.05	0.89	1.46	3.75	0.34
	%CV	1.99	1.61	1.74	7.31	0.63
006	avg	52.5	54.8	87.1	51.4	52.7
	stdev	1.79	0.81	0.85	2.81	0.61
	%CV	3.40	1.48	0.97	5.48	1.15
007	avg	53.4	56.1	84.2	51.4	53.9
	stdev	1.41	0.89	1.38	3.02	0.68
	%CV	2.65	1.58	1.64	5.88	1.26
008	avg	51.4	54.4	88.5	50.8	52.3
	stdev	1.13	0.71	2.21	2.06	0.27
	%CV	2.19	1.31	2.49	4.06	0.52
All	avg	52.5	55.1	86.0	51.2	53.2
	stdev	1.47	0.99	2.39	2.74	0.85
	%CV	2.79	1.79	2.78	5.35	1.60

TABLE 15—SUMMARY OF LATERAL LUMBAR PENDULUM TEST RESPONSES

Dummy S/N	Orientation L&R	Max angle		Peak X-moment		Head rotation decay time, ms
		angle deg	time ms	moment N-m	time ms	
004	avg	52.7	54.3	86.2	50.2	53.4
	stdev	1.58	1.47	2.23	3.75	0.88
	%CV	3.01	2.71	2.59	7.47	1.66
006	avg	53.5	54.6	89.2	51.1	52.8
	stdev	2.05	1.30	3.01	2.38	0.83
	%CV	3.82	2.38	3.38	4.67	1.56
007	avg	51.7	54.5	88.4	52.7	54.8
	stdev	1.75	1.13	2.57	2.74	2.17
	%CV	3.39	2.07	2.91	5.20	3.96
008	avg	54.2	55.6	86.7	51.2	51.6
	stdev	1.51	1.04	3.26	2.29	2.07
	%CV	2.79	1.88	3.76	4.47	4.01
All	avg	53.0	54.7	87.6	51.3	53.1
	stdev	1.93	1.29	2.96	2.89	1.94
	%CV	3.63	2.36	3.38	5.63	3.66

Pelvis Impact

A lateral impact with the 3.8 kg probe at 4.0 m/s was used to test the pelvis. Repeat tests were conducted according to the test procedures described in the technical report, ''Qualification Procedures for the Q3s Child Side Impact Crash Test Dummy,'' *supra.* For each dummy in the evaluation, NHTSA conducted five impacts to both the left and right side of the pelvis. A summary of the test results can be found in Table 16 with left- and right-side tests combined.

The repeatability of each individual dummy's response was rated as ''EXCELLENT'' except for the peak pubic force response of dummy serial number 006, which was rated as ''GOOD.'' For this particular dummy, the pubic force was about 75 N higher for right side impacts than left side impacts. For the other three dummies, the difference was only 50–60 N. Despite the differences, repeatability—when assessed by combining right and left impacts—only fell out of the ''EXCELLENT'' category for dummy serial number 006. When left and right impacts for all dummies were combined, reproducibility was rated as ''EXCELLENT'' for both the peak pubic force and the peak probe force.

TABLE 16—SUMMARY OF PELVIS QUALIFICATION TEST RESPONSES

Dummy S/N	Orientation L&R	Pubic force (N)	Probe force (N)
004	avg	745.3	1651.0
	stdev	31.33	22.78
	%CV	4.20	1.38
006	avg	782.3	1698.9
	stdev	41.07	20.68
	%CV	5.25	1.22
007	avg	801.0	1679.1
	stdev	29.31	25.59
	%CV	3.66	1.52
008	avg	822.3	1738.1
	stdev	27.02	20.69
	%CV	3.29	1.19
All	avg	787.7	1691.8
	stdev	42.48	38.71
	%CV	5.39	2.29

VI. Qualification Tests

This NPRM proposes a set of qualification tests for the Q3s. In general, Part 572 qualification tests assess the components that play a key role in the dummy's performance in the intended regulatory application. The tests qualify the dummy as an objective and suitable test device for the assessment of occupant safety in compliance tests specified in Federal motor vehicle safety standards, and for other testing purposes. Performance within these corridors assures that the dummy is capable of responding properly in a compliance or research test, while performance outside of these corridors indicates the need for adjustment, repair or replacement.

a. Overview of Proposed Corridors

Proposed qualification requirements for the Q3s are shown in Table 16. NHTSA has published a technical document, ''Qualification Procedures for the Q3s Child Side Impact Crash Test Dummy (NHTSA, 2013),'' describing the equipment, test set-ups and procedures. A copy of the report has been placed in the docket.

TABLE 17—PROPOSED Q3S QUALIFICATION REQUIREMENTS

Test	Measurement	Units	Corridor
Head—Frontal	Resultant acceleration	G	250–297
Head—Lateral	Resultant acceleration	G	113–140
Neck—Flexion	Maximum rotation	deg	70–82
	Time of max rotation	msec	55–63
	Peak moment (My)	N-m	41–51
	Time of peak My	msec	49–62
	Decay time to 0 from peak angle	msec	50–54
Neck—Lateral	Maximum rotation	deg	77–88
	Time of max rotation	msec	65–72
	Peak moment (Mx)	N-m	25–32
	Time of peak Mx	msec	66–73
	Decay time to 0 from peak angle	msec	63–69
Neck—Torsion	Maximum rotation	deg	75–93
	Time of max rotation	msec	91–113
	Peak moment (Mz)	N-m	8–10
	Time of peak Mz	msec	85–105
	Decay time to 0 from peak angle	msec	84–103
Shoulder	Lateral displacement	mm	16–21
	Peak probe force	kN	1.24–1.35
Thorax with Arm	Lateral displacement	mm	23–28
	Peak probe force	kN	1.38–1.69
Thorax without Arm	Lateral displacement	mm	24–31
	Peak probe force	N	620–770
Lumbar—Flexion	Maximum rotation	deg	48–57
	Time of max rotation	msec	52–59
	Peak moment (My)	N-m	78–94
	Time of peak My	msec	46–57
	Decay time to 0 from peak angle	msec	50–56
Lumbar—Lateral	Maximum rotation	deg	47–59
	Time of max rotation	msec	50–59
	Peak moment (Mx)	N-m	78–97
	Time of peak Mx	msec	46–57
	Decay time to 0 from peak angle	msec	47–59
Pelvis	Peak pubic load	N	700–870
	Peak probe force	kN	1.57–1.81

The bounds we have proposed for the qualification targets (the corridors) are wide enough to account for normal variations in dummy and laboratory differences, and narrow enough to assure consistent and repeatable measurements in compliance testing. Our proposed bounds are based on tests conducted at a single laboratory, NHTSA's Vehicle Research and Test Center (VRTC). The data were collected using four Q3s units. For each measurement, performance targets were derived using either ±3 standard deviations from the mean or 10 percent from the mean, whichever is narrower. Upper and lower bounds were rounded to the next whole number away from the mean using three significant digits.

We recognize that from a probabilistic standpoint, three standard deviations is an unusually wide bound. A bound of 10 percent around a target is typical of most Part 572 ATD qualifications. Our reason for initially setting the bounds to be wide for this NPRM stem from a current lack of test data for the Q3s.[28] Given that all Q3s qualification data were collected from a single laboratory (VRTC), we could not factor into account unknown variability associated with different labs, operators, dummies, and other allowable variances such as temperature and humidity that may not be present in our dataset. We will continue to collect qualification data, and we will examine all qualification data provided to us by commenters. We anticipate that when new qualification data are combined with our current set of data, in a final rule our bounds will be narrowed as reasonably possible and may be no greater than two standard deviations.

b. Rationale for the Tests

The technical document cited earlier in this preamble, ''Evaluation of the Q3s Three Year-Old Child Side Impact Dummy, Repeatability, Reproducibility, and Durability,'' discusses how the agency's four Q3s units conform to the qualification requirements. This report also discusses our rationale for the tests and proposed response requirements needed to qualify the Q3s. For each test, the impact energy level and the selection of the targeted measurements were chosen by balancing multiple criteria, as described below.

Dummy Functionality

For each test, certain dummy sensors and signal characteristics (such as the magnitude and timing) have been specified as qualification targets. By monitoring these sensors, the qualification tests assure that the dummy is functioning properly. Loose or damaged dummy hardware is often manifested in a signal that does not conform to the qualification requirements, thus alerting test technicians that dummy maintenance may be needed. Conformity also assures that the sensors themselves are working properly.

Test protocols are also designed to properly demonstrate dummy functionality by mirroring dummy loading patterns seen in CRS sled tests

[28] For other Part 572 ATDs, we set qualification bounds by examining data from multiple test labs, several dummies, and dummies built by different dummy manufacturers. For example, the qualification bounds for the HIII–10C (the most recent test dummy to be incorporated into part 572) were derived from tests on about 30 different dummies, with data supplied from about 10 different laboratories. On average, the bound widths for the HIII–10C are about 10% of the mean, with a low of 7.4% and a high of 16.3%.

conducted in support of the FMVSS No. 213 side impact test under consideration. For example, we have observed the Q3s undergoing asymmetric motion as the dummy simultaneously moves forward and laterally. In doing so, the motion of the dummy is such that it may twist itself around the edge of the CRS so that the head may strike the door panel near its forehead. The degree to which the dummy wraps around the seat can vary widely depending upon the design of the CRS. Thus, we have included separate frontal and lateral qualification requirements for the head.

We have also included separate requirements for the neck and lumbar spine elements of the dummy, which are flexible rubber components that experience both frontal and lateral flexion during a CRS test.

Additionally, a torsion test is prescribed for the neck since the neck also twists along its long axis to some degree.

For the shoulder, thorax, and pelvis, we believe that only pure lateral qualification requirements are needed, since almost all loads pass through their lateral aspects even in cases where the dummy twists within the CRS during testing.

Assure Biofidelity

Many of the qualification test protocols are very similar to the dynamic tests used to assess biofidelity. This helps to assure that a qualified dummy is also a biofidelic dummy.

Sufficient Energy

The impact speeds and probe masses have been selected to demonstrate that the various body segments of the Q3s are working properly at energy levels at or near those associated with injury thresholds. These include pass/fail thresholds that we are considering for the FMVSS No. 213 side impact test. For measurements not associated with IARVs, such as the neck torsion requirement, the energy levels are chosen to be consistent with high-end responses observed in CRS testing. In general, the energy level is chosen to exercise the dummy but without causing damage.

Proven Soundness of Part 572

To the extent possible, we have based the proposed test protocols and devices on qualification tests set forth for other test dummies in Part 572. The qualification tests have been proven reliable and sound in qualifying NHTSA's other test dummies. Moreover, using the same basic tests minimizes the amount of new qualification equipment needed by test laboratories that may already have such equipment in place for qualifying other ATDs.

c. New and Modified Part 572 Tests and Equipment

This NPRM proposes only one new test not found elsewhere in Part 572, a method to assure the functionality of the Q3s neck under torsion. This is a fairly simple procedure added to assure that the neck is repeatable under twist. The test involves the use of a special test fixture attached to the Part 572 pendulum which imparts a pure torsion moment to the isolated neck.

Additionally, a few minor changes to established Part 572 protocol and equipment have been introduced to improve the ease and consistency of the qualification tests. The pendulum probe used to qualify the Q3s is specified to be 3.81 kg, which is about twice as large as the 1.70 kg probe used for the HIII–3C, Subpart P qualifications (Hybrid III 3-year-old child test dummy used for frontal testing). This probe was chosen to enable the same probe to be used for all Q3s qualification tests that use a probe. The heavier probe allows a range of reasonable test speeds to be used to attain the desired response level. Tests speeds range from 3.6 m/s (shoulder impact) up to 5.0 m/s (thorax with arm). In contrast, the test speed for the thorax test of the HIII–3C with the lighter probe is 6.0 m/s.

We have also proposed a new test instrument for the flexion tests of the neck and the lumbar spine. These tests measure relative rotation by means of two angular rate sensors (ARSs). The ARSs that we specify represent a relatively new technology. For similar tests with all other Part 572 dummies, relative rotation is measured using a system of rotary potentiometers and a linking rod. Because the potentiometer system is mounted off-axis, it creates an asymmetry that can create problems with a small dummy like the Q3s. We are concerned that the added mass and inertia of a potentiometer system can introduce twisting of the head simulator, which may affect the accuracy of the measurements.

ARS units, on the other hand, are lightweight and compact. They do not require a connecting rod and they can be mounted very near to the headform's axis of symmetry so that their propensity to twist during a test due to the added mass is greatly reduced. Furthermore, throughout our testing of the Q3s the angular rate sensors have been observed to produce very accurate measures of rotation. We tentatively conclude that use of the ARS units in this application would be an improvement over potentiometers.

d. Proposed Test Specifications and Performance Requirements

NHTSA proposes the following performance specifications for the head in drop tests, and for the neck, shoulder, thorax, lumbar spine, and pelvis in pendulum tests. Performance requirements in the lateral direction must be met by carrying out the tests in the direction opposing the primary load vector of the ensuing full scale test for which the dummy is being qualified. For example, if the dummy is to be used in an impact to the left side of a CRS, qualification tests on the left aspect of the dummy's head, neck, shoulder, thorax, lumber spine, and pelvis are carried out. The fore-aft performance requirements for the head, neck, and lumbar spine must be met for all impact tests. That is, in addition to the lateral tests, the fore-aft tests are conducted on the ATD regardless of which side of the CRS is tested.

Head Drop Tests

The correct kinematic response of the head-neck system is of substantial importance to quantify the protection offered by CRSs in terms of head motion and acceleration during an impact. This test serves to assure the uniformity of the impact response. Head qualification consists of two test components: Frontal and lateral head drops. The frontal head drop is conducted from a height of 376 mm, while the lateral head drop is conducted at 200 mm.

The head must respond with peak resultant acceleration between: 250 g and 297 g when dropped from 376 mm height such that the forehead lands onto a flat rigid surface; and between 113 g and 140 g when dropped from a 200 mm height such that the side of the head lands onto a flat rigid surface.

Neck Pendulum Test

We believe that a repeatable kinematic response of the head-neck system is important to quantify the protection offered by CRSs in terms of limiting head excursion and head acceleration in both a head impact and a non-impact situation. Under the CRS test protocol under consideration by the agency, the primary kinematic motion of the head is in the lateral direction, but the head also twists and turns in other directions to a lesser extent. Given the importance of head motion, we believe a full set of neck qualification requirements is warranted to assure uniformity. Therefore, our proposed neck qualification consists of three test components: Frontal flexion, lateral

flexion, and torsion neck pendulum tests.

The neck would have to allow the headform to articulate in pendulum tests at:

- 4.7 m/s in frontal flexion, at between 70 degrees and 82 degrees occurring between 55 ms and 63 ms from time zero and decaying back to the zero angle between 50 ms and 54 ms after the peak rotation; the value of the maximum moment must be between 41 N-m and 51 N-m occurring between 49 ms and 62 ms from time zero,
- 3.8 m/s in lateral flexion, at between 77 degrees and 88 degrees occurring between 65 ms and 72 ms from time zero and decaying back to the zero angle between 63 ms and 69 ms after the peak rotation; the value of the maximum moment must be between 25 N-m and 32 N-m occurring between 66 ms and 73 ms from time zero, and
- 3.6 m/s in torsion, at between 75 degrees and 93 degrees occurring between 91 ms and 113 ms from time zero and decaying back to the zero angle between 84 ms and 103 ms after the peak rotation; the value of the maximum moment must be between 8 N-m and 10 N-m occurring between 84 ms and 103 ms from time zero.

Shoulder Impact Test

Though injury assessment is not generally associated with the shoulder, the way the shoulder absorbs energy can affect the overall kinematics of the dummy. This test assures that the shoulder acts uniformly in the way it distributes the load under a direct lateral impact.

The shoulder exposed to a pendulum impact at 3.6 m/s is to exhibit a peak shoulder deflection between 16 mm and 21 mm, and a peak resistance force between 1,240 N and 1,350 N.

Thorax Impact Tests

The thorax qualification tests are very similar to the SAE test used to assess lateral thorax biofidelity. For qualification, however, the test is conducted two ways: Without arm interaction (as in the SAE test) and with the arm attached such that the impact probe strikes the upper arm. Both tests utilize a lateral impact with a 3.8 kg probe.

The thorax ''without arm'' test assures uniformity of the thorax structure, including its mount to the spine, and its response to a direct impact in terms of rib deflection. The arm is completely removed from the dummy. The 3.8 kg test probe is aligned with the thorax displacement IR–TRACC and impacts the thorax laterally at a speed of 3.3 m/s.

For the ''arm attached'' test, the upper arm is positioned vertically and aligned with the dummy's thorax. The lower arm is positioned to make a 90 degree angle with the upper arm. The loading of the ribcage goes through the arm. The impact speed of the probe is 5.0 m/s. This test assures uniformity of the arm in the way it absorbs energy and interacts with the thorax under a direct lateral impact.

The thorax exposed to a pendulum impact:

- At 3.3 m/s, without arm, is to exhibit a peak thorax deflection between 24 mm and 31 mm, and a peak resistance force between 620 N and 770 N; and,
- at 5.0 m/s, with arm attached, is to exhibit a peak thorax deflection between 23 mm and 28 mm, and a peak resistance force between 1,380 N and 1,690 N occurring after 5 ms from time zero.

As explained previously, the peak probe force is taken after 5 ms to separate the probe's initial inertial response during arm contact from its response due to its interaction with the thorax. The net effect of recording the peak probe force after 5 ms is the elimination of the first peak.

Lumbar Tests

The rubber lumbar column bends to some extent during a CRS side impact test. This bending might affect the overall kinematics of the dummy, including the excursion of the head. It could also affect lateral loads and the deflection of the thorax. We believe that this rubber element can be a source of variability, so we have included a qualification test to assure the uniformity and integrity of this component.

Lumbar testing would consist of two types of pendulum tests: A frontal test and a lateral test. For both tests, the lumbar spine element containing the flexible column is removed from the dummy, similar to the neck qualification tests. Lumbar tests are conducted using the same Part 572 neck pendulum and headform device utilized in the neck qualification tests. In the case of lumbar qualification, the headform is not intended to represent the inertial properties of any particular body region, but merely provides an apparatus that helps to ensure a repeatable test condition. The frontal and lateral pendulum tests are conducted at the same impact speed of 4.4 m/s and specify the same pendulum impulse.

We propose that the lumbar spine must allow the headform to articulate:

- In frontal flexion, at not less than between 48 degrees and 57 degrees occurring between 52 ms and 59 ms from time zero and decaying back to zero angle between 50 ms and 56 ms after the peak rotation; the value of the maximum moment must be between 78 N-m and 94 N-m occurring between 46 ms and 57 ms from time zero; and,
- in lateral flexion, at not less than between 47 degrees and 59 degrees occurring between 50 ms and 59 ms from time zero and decaying back to zero angle between 47 ms and 59 ms after the peak rotation; the value of the maximum moment must be between 78 N-m and 97 N-m occurring between 46 ms and 57 ms from time zero.

Pelvis Impact

A lateral impact with the 3.8 kg probe at 4.0 m/s is used to test the pelvis. This test protocol is very similar to the SAE biofidelity test. The pelvis exposed to a pendulum impact at 4.0 m/s is to exhibit a peak pubic load between 700 N and 870 N, and a peak force measured by the pendulum between 1570 N and 1810 N.

Other

We have not included a qualification test aimed specifically at the Q3s abdomen. We tentatively believe that any non-uniformity in stiffness due to the absence of a qualification requirement for the abdomen would have an insignificant effect on the overall kinematics of the dummy in a side impact test. Also, the abdomen of the Q3s is uninstrumented and is thus not generally used to assess injury potential in a side impact.

Nevertheless, comments are requested on the need for a qualification test for the abdomen. The abdomen is made of a high density, compressible foam material, whose compressive characteristics can vary from one abdomen to another and whose properties can change with aging and other factors. We request comments on an abdominal test protocol similar to that which we used to assess the biofidelity of the Q3s abdomen.

VII. Durability

No durability problems arose with the Q3s dummies in any of the sled tests or component tests.

a. High-Energy Component Tests

We also conducted high-energy component tests to assess durability and no durability problems arose in those. In these tests, we raised the kinetic energy of the impact to levels that exposed the dummy to loading conditions slightly greater than those that might be

expected in the dummy's regulatory application. High-energy tests were conducted for the head, neck, shoulder, thorax (with and without arm), lumbar, and pelvis. As discussed below, we found no damage to the dummy's structural components or instrumentation.

High-Energy Head Drop Tests

We performed frontal and lateral head drop tests using the qualification test setup procedures, except the drop heights were increased to achieve kinetic energy increases of 10 percent, 20 percent, and 30 percent, as compared to the standard qualification test.

Frontal head drop responses are summarized in Table 18. The peak resultant head acceleration at 30 percent increased energy was 318.5 g. This impact resulted in a HIC15 value of 1732.5, which is well above the proposed injury criterion limit of 700 and demonstrates the severity of the test. Post-test inspection of the head revealed no structural damage to the synthetic skull material or to the vinyl skin.

Lateral head drop responses are summarized in Table 19. For the most severe condition, the peak resultant head acceleration was 146.6 g. No structural damage of the head was observed in the post-test inspection of the head assembly.

TABLE 18—HIGH-ENERGY FRONTAL HEAD DROP TEST RESPONSES

Test No.	Energy increase (nominal) (percent)	Drop height (mm)	Peak resultant accel (g)
Baseline	0	376	265.5
1	10	414	284.6
2	20	451	304.4
3	30	489	318.5

TABLE 19—HIGH-ENERGY LATERAL HEAD DROP TEST RESPONSES

Test No.	Energy increase (nominal) (percent)	Drop height (mm)	Peak resultant accel (g)
Baseline	0	200	121.5
1	10	220	127.3
2	20	240	141.6
3	30	260	146.6

High-Energy Neck Pendulum Tests

We conducted frontal, lateral, and torsional neck pendulum tests at the increased impact speeds. Tests were conducted according to the qualification procedures, except for the increase in impact speeds.

Frontal Flexion Tests. The results of the high-energy frontal neck flexion tests are summarized in Table 20. Three repeat tests were run at 5.5 m/s. This speed represents a 34 percent increase in energy over the qualification speed. We chose this condition because it is consistent with the test protocol used to qualify the HIII–3C (a frontal impact dummy). We found no signs of damage or unusual wear to the Q3s neck or neck cable at the elevated speed. The response curves were smooth, indicating that no unusual contact occurred during the tests. The tests also demonstrate that the Q3s neck would be repeatable if the dummy were used in a frontal impact mode.

Lateral Flexion Tests. The results of the high-energy lateral neck flexion tests are summarized in Table 21. Incremental tests were run at impact speeds needed to achieve increases in kinetic energy of 10 percent, 20 percent, and 30 percent. In all cases, the response signals were smooth with no indication of damage.

Torsion Tests. The high-energy neck torsion tests were also run at impact speeds needed to achieve energy increases of 10 percent, 20 percent, and 30 percent. The responses are summarized in Table 22. In all cases, the response signals were smooth with no indication of damage.

TABLE 20—FRONTAL FLEXION NECK PENDULUM TEST RESPONSES

Test No.	Energy increase (nominal) (percent)	Impact speed, m/s	Max angle		Peak Y-moment		Head rotation decay time, m/s
			angle deg	time ms	moment N-m	time ms	
Baseline	0	4.7	74.0	58.2	44.9	54.1	51.5
1	34	5.5	78.8	55.9	62.3	53.0	48.0
2	34	5.5	80.1	55.4	66.0	52.7	47.7
3	34	5.5	79.4	57.0	63.2	53.2	47.6

TABLE 21—LATERAL FLEXION NECK PENDULUM TEST RESPONSES

Test No.	Energy increase (nominal) (percent)	Impact speed, m/s	Max angle		Peak Y-moment		Head rotation decay time, m/s
			angle deg	time ms	moment N-m	time ms	
baseline	0	3.8	80.9	68.7	26.9	70.2	64.8
1	10	4.0	82.3	68.9	27.1	70.1	65.5
2	20	4.2	85.1	67.2	31.9	66.8	63.2
3	30	4.3	86.8	66.8	34.3	66.3	62.3

TABLE 22—NECK TORSION PENDULUM TEST RESPONSES

Test No.	Energy increase (nominal) (percent)	Impact speed	Max angle		Peak Z-Moment		Head rotation decay time
			angle	time	moment	time	
		m/s	Deg	Ms	N-m	ms	ms
baseline	0	3.6	80.9	99.5	9.35	92.1	88.7
1	10	3.8	83.3	102.9	9.35	95.5	91.7
2	20	3.9	83.8	101.5	9.40	95.0	91.2
3	30	4.1	87.4	103.1	9.73	96.9	91.0

High-Energy Shoulder Impact Tests

The agency conducted shoulder impacts according to the qualification test setup procedures, except the impact speeds were increased to achieve increases in kinetic energy of approximately 10 percent, 20 percent, and 30 percent as compared to the qualification test. Table 23 provides a summary of the responses for the high-energy shoulder impact tests. At the 30 percent increased energy level, the peak lateral shoulder deflection was 20.4 mm and the response curve was smooth, indicating that the shoulder string pot did not reach its maximum allowable stroke. The peak probe force was 1450 N. Post-test inspections revealed no structural damage to the dummy or instrumentation.

TABLE 23—HIGH-ENERGY SHOULDER IMPACT TEST RESPONSES

Test No.	Energy increase (nominal) (percent)	Impact speed (m/s)	Shoulder displacement (mm)	Probe force (N)
baseline	0.0	3.6	17.6	1269
1	10	3.8	19.7	1348
2	20	4.0	20.1	1443
3	30	4.1	20.4	1450

High-Energy Thorax Impact Tests

We conducted high-energy thorax impact tests with and without the arm. We followed the set-up procedures used in the qualification tests, except we increased the probe impact speeds to supply a corresponding increase in the kinetic energy.

For the ''with arm'' tests, we conducted one impact at 20 percent increased kinetic energy and two at a 30 percent increase. Table 24 summarizes the responses for the high-energy thorax with arm impacts. The highest lateral thorax displacement was 28.7 mm and the response curve was smooth. Post-test inspections demonstrated that no damage occurred to any portion of the dummy's torso.

For the thorax ''without arm'' test condition (Table 25), because thorax durability was a concern with earlier versions of the Q3s, we conducted tests at higher severity levels to provide a rigorous assessment of the durability of the thorax. For the thorax ''without arm'' test condition, we conducted an impact at 50 percent increased kinetic energy and another impact at a 70 percent increase. No structural damage was observed during post-test inspections of the dummy's thorax and IR–TRACC displacement transducer.

In addition, for the thorax ''without arm'' test condition, we conducted tests at increased severity levels to assess further the durability of the IR–TRACC device. The maximum allowable lateral thorax displacement before damage occurs to the IR–TRACC displacement measurement device is approximately 40 mm. Considering this physical limitation, we increased the probe impact speed until the lateral displacement approached 38 mm. We found that the impact speed corresponding to roughly 38 mm of displacement was 4.4 m/s (approximately an 80 percent increase in kinetic energy). Accordingly, we conducted two additional impact tests at that speed. For the three tests conducted at 80 percent increased kinetic energy, the lateral thorax displacement ranged from 37.1–37.9 mm and the response curves were smooth, indicating that the transducer did not exceed its maximum allowable stroke. No structural damage was observed during post-test inspections of the dummy's thorax and IR–TRACC displacement transducer.

TABLE 24—HIGH-ENERGY THORAX WITH ARM IMPACT TEST RESPONSES

Test No.	Energy increase (nominal) (percent)	Impact speed (m/s)	Thorax displacement (mm)	Probe force (N)
baseline	0	5.0	25.0	1526
1	20	5.5	27.0	1663
2	30	5.7	28.3	1625
3			28.7	1652

TABLE 25—HIGH-ENERGY THORAX WITHOUT ARM IMPACT TEST RESPONSES

Test No.	Energy increase (nominal) (percent)	Impact speed (m/s)	Thorax displacement (mm)	Probe force (N)
baseline	0	3.3	26.0	732
1	50	4.0	32.8	784
2	70	4.3	36.2	772
3	80	4.4	37.9	799
4			37.3	814
5			37.1	815

High-Energy Lumbar Pendulum Tests

We conducted high-energy frontal and lateral lumbar pendulum tests according to the qualification test set-up procedures, except the impact speeds were increased. For frontal pendulum tests, the impact energy was increased up to approximately 30 percent greater than the qualification test, while lateral tests were increased up to approximately 40 percent greater than the qualification test.

The frontal test results are summarized in Table 26 and the lateral results are summarized in Table 27. The lumbar moment and rotation responses did not indicate any unusual issues with the lumbar spine element or load cell in either of the test conditions. No damage or delamination was observed in post-test inspections of the lumbar components.

TABLE 26—HIGH-ENERGY FRONTAL LUMBAR PENDULUM TEST RESPONSES

Test No.	Energy increase (nominal) (percent)	Impact speed, m/s	Max angle		Peak Y-moment		Head rotation decay time, ms
			Angle deg	Time ms	Moment N-m	Time ms	
Baseline	0	4.4	53.3	56.6	85.7	53.9	54.2
1	20	4.8	57.5	56.8	88.6	51.9	55.0
2	30	5.0	60.3	57.5	95.6	53.5	55.0

TABLE 27—HIGH-ENERGY LATERAL LUMBAR PENDULUM TEST RESPONSES

Test No.	Energy increase (nominal) (percent)	Impact speed, m/s	Max angle		Peak Y-moment		Head rotation decay time, ms
			Angle deg	Time ms	Moment N-m	Time ms	
Baseline	0	4.4	53.9	56.0	83.5	50.3	49.2
1	20	4.8	59.0	57.3	95.7	54.0	54.0
2	30	5.0	60.7	57.4	100.8	54.0	54.0
3	40	5.2	62.9	56.6	107.7	53.3	53.3

High-Energy Pelvis Impact Tests

We conducted high-energy pelvis impacts in accordance with the qualification test set-up procedures, except we increased impact speeds to achieve increases in kinetic energy of approximately 15 percent, 40 percent, and 55 percent. The responses for the high-energy pelvis impact tests are summarized in Table 28. At the highest energy level, the lateral pubic load was 1057 N (well beyond the 450 N maximum observed in the Cozy Cline R&R series) and the probe force was 2357 N. Analysis of the lateral pubic load response revealed a smooth curve, indicating no unusual contact internal to the dummy. No damage to the pelvis region was observed during post-test inspections.

TABLE 28—HIGH-ENERGY PELVIS IMPACT TEST RESPONSES

Test No.	Energy Increase (nominal) (percent)	Impact speed (m/s)	Pubic force (N)	Probe force (N)
baseline	0.0	4.0	796	1712
1	15	4.3	843	1896
2	40	4.7	1001	2209
3	55	5.0	1057	2357

b. Q3s Servicing and Maintenance

In our experience with other Part 572 ATDs, deformable parts typically have the shortest service lives. The two most often replaced parts are the ribcage and the molded neck. For example, we have found the typical service life for HIII–10C rib sets and neck assemblies to be about thirty sled tests. Vinyl flesh materials—particularly the chest flesh—are also replaced on a recurring basis as they become aged, abraded, or torn.

NHTSA owns four Q3s units of the final Build Level D version, which include the updated parts to improve the durability of the thorax, neck, and pelvis. There have been no durability problems with the ATDs since they have been upgraded to the latest build level. Given the record of low maintenance to our own Q3s units, we consider the dummy to be highly suitable for proposed use in FMVSS No. 213 in terms of its durability. Our records indicate that we have had relatively few instances of Q3s part replacements of any sort.

VIII. Drawings and Patents

Throughout the notice and comment period of this Part 572 rulemaking, the Q3s dummy will be available from Humanetics. The Q3s engineering drawings used to fabricate the dummy are available in the docket for public review and comment. The Q3s engineering drawings are a proprietary product owned by Humanetics,[29] with the exceptions noted in this section. Thus, during the comment period most drawings will display the Humanetics name in the title block and will have the following restrictive note:

> This drawing is the sole property of Humanetics Innovative Solutions, Inc. and is being provided to NHTSA and other related organizations for evaluation and comment related to NHTSA's rulemaking process. Except for commenting purposes pursuant to this process, the drawing shall not be copied or used for any other purpose without the written consent of Humanetics Innovative Solutions, Inc.

For the final rule, the note will be removed and the dummy drawings and designs will be free from any restrictions. This includes their use in fabrication and in building computer simulation models of the dummy.

During this comment period, some drawings will not have the Humanetics name in the title block and will not have the restrictive note on them. In these cases, NHTSA contracted with Humanetics to provide the part or expressly contributed to the design of the part. As described earlier in this preamble, Humanetics fabricated the Build Level D neck using detailed specifications provided by NHTSA. These specifications included detailed engineering drawings and a prototype of the neck itself. In addition, NHTSA also contributed to the design of the femur, hip, and several other minor parts of the dummy.

The list of drawings related to those agency's efforts is shown in Table 29. On these drawings, the NHTSA name appears in the title block and the restrictive note does not appear. These drawings are available to the public for use during this NPRM stage without restriction.

NHTSA is aware that Humanetics has filed a patent application with the United States Patent and Trademark Office covering certain parts of the Q3s dummy. Prior to the publication of any final rule, NHTSA plans to meet with Humanetics and come to some agreement that ensures the continued availability of the Q3s dummy to the general public at a reasonable price. Notwithstanding the intellectual property issues identified in this section, NHTSA emphasizes that readers should take this opportunity to review the information provided in this NPRM and provide responses on the substantive aspects of the proposal.

TABLE 29—LIST OF Q3S DRAWINGS FOR WHICH NO RESTRICTIVE NOTE APPEARS

Drawing No.	Description	Used on
020–2400	Neck assembly, Q3s	020–2400
020–2401	Molded neck, Q3s	020–2400
020–2402	Neck plate, top Q3s	020–2400
020–2403	Neck plate, middle, Q3s	020–2400
020–2404	Neck plate, bottom, Q3s	020–2400
020–2405	Retaining ring, Q3s neck	020–2400
020–2406	Square crimp, Q3s neck	020–2400
020–2407	Bottom crimp, Q3s neck cable	020–2400
020–2408	Neck cable assembly, Q3s	020–2400
020–2409	Retaining nut, Q3s neck	020–2400
020–9611	Femur, Right	020–9616
020–9511	Femur, Left	020–9516
020–9607	Femur reinforcement, Right	020–9616

[29] FTSS/Humanetics' development of the Q3s dummy was not performed directly under a government research and development contract. NHTSA procured its Q3s units under a standard purchase order in which the FTSS/Humanetics products were listed within a catalog with a price schedule. Using this same purchase mechanism, our units were periodically sent back to FTSS/Humanetics for warranty maintenance and upgrades. As we performed subsequent tests on our Q3s units, we routinely shared our results with FTSS/Humanetics, and concurrently reported them in public and in SAE and ISO committee meetings, providing test results, identifying problems, and suggesting ways to correct problems. FTSS/Humanetics produced parts based on this information, and periodically provided new components to NHTSA for evaluation.

TABLE 29—LIST OF Q3S DRAWINGS FOR WHICH NO RESTRICTIVE NOTE APPEARS—Continued

Drawing No.	Description	Used on
020–9507	Femur reinforcement, Left	020–9516
020–3537	Ball shoulder	020–9616, 020–9516
020–9903	End stop	020–9616, 020–9516
020–7116	Hip joint assembly, Right	020–7116
020–7113	Hip joint assembly, Left	020–7113
020–7115	Hip cup assembly, Right	020–7116, 020–7113
020–7114	Hip cup assembly, Left	020–7116, 020–7113
020–7117	Hip cup, upper	020–7116, 020–7113
020–7118	Hip cup, lower	020–7116, 020–7113
020–7103	Detent peg	020–7116, 020–7113
020–7104	Spring retainer plate	020–7116, 020–7113
020–9000	Q3s positioning tool	020–9000
020–9001	Indicator arm	020–9000
020–9002	Extension bracket	020–9000
020–9003	Cross beam	020–9000
020–9004	Knee spacer	020–9000
020–9005	Pivot screw	020–9000

IX. Consideration of Alternatives

We considered the merits of alternative test dummies for use in the side impact test under consideration for FMVSS No. 213. The closest viable alternatives were the modified Hybrid III 3-year-old child test dummy (HIII–3C) and the Q3.

Consideration of the Modified HIII–3C (''3Cs'')

The HIII–3C was originally developed in 1992. It is used in FMVSS No. 208, ''Occupant crash protection,'' to evaluate air bag aggressiveness or air bag suppression when a child is close to a deploying air bag, and in FMVSS No. 213's frontal sled test for the evaluation of child restraint performance. The HIII–3C was not designed for lateral impacts. Under lateral loading, the shoulder and torso exhibit highly stiff behavior and do not fully replicate a child's kinematics. NHTSA considered using the HIII–3C in the 2002 FMVSS No. 213 ANPRM published in response to the TREAD Act (see footnote 4, *supra*), but concluded that the ATD was not acceptable for use in side impact testing.

After the agency assessed the HIII–3C in side impacts, NHTSA developed a retrofit package for the dummy to install a new head and neck with better lateral biofidelity. The retrofitted dummy is referred to as the ''3Cs.''

NHTSA evaluated the 3Cs and the Q3s concurrently. Based on our biofidelity evaluations, the 3Cs did not achieve nearly as good a ranking as the Q3s. The technical report, ''Biofidelity Assessment of the Q3s Three-Year-Old Child Side Impact Dummy,'' *supra,* discusses the performance of the two ATDs. The Q3s outperformed or is equivalent to the 3Cs in every aspect of biofidelity related to a dummy's response in a side impact. Given the superior biofidelity of the Q3s, we believe that it more accurately represents the response expected of a human child.

In addition, the Q3s has thorax deflection instrumentation, which the 3Cs does not. We tentatively conclude that the Q3s is a better dummy than the 3Cs to measure injury assessment values in side impacts and is a preferable ATD for use in the proposed side impact upgrade to FMVSS No. 213.

Consideration of the Q3

As discussed in section II of this preamble, the design of the Q3s was derived from the original Q3 dummy developed by the European community. The Q3 is intended for use in frontal, side, and rear impacts.

Around the same time Humanetics was working to bring the Q3s up to production level, the Q3 underwent a significant design revision. Starting in 2003, a ''new'' Q3 took shape. Many of the new design concepts included in the Q3s were also built into the Q3 as Humanetics worked concurrently on both dummies (e.g., thorax string potentiometers were replaced by IR–TRACCs in both dummies). Still, as reported by the European Enhanced Vehicle-Safety Committee (Wismans, et al., 2008), the new Q3 does not respond well in lateral biofidelity tests. Furthermore, the thorax of the new Q3 has become even less biofidelic than the original. Therefore, NHTSA does not consider the Q3 preferable to the Q3s.

Conclusion

The agency tentatively concludes that the improved biofidelity and additional injury assessment capability of the Q3s compared to the other commercially available child side impact test dummies supports a decision to adopt the Q3s into 49 CFR Part 572. The Q3s dummy is a state-of-the-art device that would allow for a better assessment of the risk of injury to child occupants than the alternative test dummies. The availability of Q3s's injury measuring capability also is important to the design, development and evaluation of the side impact protection of child restraint systems. The Q3s test dummy is available today, and has been thoroughly evaluated for suitable reproducibility and repeatability of results.

X. Rulemaking Analyses and Notices

Executive Order (E.O.) 12866 and E.O. 13563, and DOT Regulatory Policies and Procedures

NHTSA has considered the impacts of this regulatory action under E.O. 12866 and E.O. 13563. This rulemaking action was not reviewed by the Office of Management and Budget under E.O. 12866. The rulemaking has also been determined to be non-significant under DOT's regulatory policies and procedures.

This document would amend 49 CFR Part 572 by adding design and performance specifications for a test dummy representative of a 3-year-old child that the agency would possibly use in FMVSS No. 213 side impact compliance tests and possibly for research purposes. This Part 572 proposed rule would not impose any requirements on anyone. Businesses are affected only if they choose to manufacture or test with the dummy. Because the economic impacts of this proposed rule are minimal, no further regulatory evaluation is necessary.

There are benefits associated with this rulemaking but they cannot be quantified. The incorporation of the test dummy into 49 CFR Part 572 would

enable NHTSA to use the ATD in a new dynamic side impact test that we are considering adopting into FMVSS No. 213. Adoption of side impact protection requirements in FMVSS No. 213 enhances child passenger safety and accords with MAP–21. In addition, the availability of this dummy in a regulated format would be beneficial by providing a suitable, stabilized, and objective test tool to the safety community for use in better protecting children in side impacts.

The cost of an uninstrumented Q3s dummy is approximately $48,750. The minimum set of instrumentation needed for qualification and compliance type testing includes three uni-axial accelerometers (part no. SA572–S4), one neck/spine load cell (SA572–S8), one shoulder potentiometer set (SA572–S38 and S39), one single axis IR–TRACC (SA572–S37), and one pubic load cell (SA572–S7). The cost of this instrumentation adds approximately $18,200 for a total cost of about $66,950.

We have not estimated the costs of the equipment needed to perform the qualification tests other than the instrumentation needed (two angular rate sensors, $1,230 apiece; one test probe accelerometer, $500; one rotary potentiometer, $500.) With the exception of the neck torsion fixture, the angular rate sensors, and the 3.8 kg test probe, all fixtures and instruments are common with those used to qualify other Part 572 dummies.

We recognize that dummy refurbishments and part replacements are an inherent part of ATD testing. Various parts will likely have to be refurbished or replaced, but we do not know which parts are likely to be worked on the most. However, since the dummies are designed to be reusable, costs of the dummies and of parts can be amortized over a number of tests.

Regulatory Flexibility Act

Pursuant to the Regulatory Flexibility Act (5 U.S.C. 601 et seq., as amended by the Small Business Regulatory Enforcement Fairness Act (SBREFA) of 1996), whenever an agency is required to publish a proposed or final rule, it must prepare and make available for public comment a regulatory flexibility analysis that describes the effect of the rule on small entities (i.e., small businesses, small organizations, and small governmental jurisdictions), unless the head of the agency certifies the rule will not have a significant economic impact on a substantial number of small entities. The Small Business Administration's regulations at 13 CFR Part 121 define a small business, in part, as a business entity ''which operates primarily within the United States.'' (13 CFR 121.105(a)).

We have considered the effects of this rulemaking under the Regulatory Flexibility Act. I hereby certify that this rulemaking action would not have a significant economic impact on a substantial number of small entities. This action would not have a significant economic impact on a substantial number of small entities because the addition of the test dummy to Part 572 would not impose any requirements on anyone. NHTSA would use the ATD in agency testing but would not require anyone to manufacture the dummy or to test motor vehicles or motor vehicle equipment with it.

National Environmental Policy Act

NHTSA has analyzed this proposed rule for the purposes of the National Environmental Policy Act and determined that it would not have any significant impact on the quality of the human environment.

Executive Order 13045 and 13132 (Federalism)

Executive Order 13045 (62 FR 19885, April 23, 1997) applies to any rule that: (1) Is determined to be ''economically significant'' as defined under E.O. 12866, and (2) concerns an environmental, health, or safety risk that NHTSA has reason to believe may have a disproportionate effect on children. If the regulatory action meets both criteria, we must evaluate the environmental health or safety effects of the planned rule on children, and explain why the planned regulation is preferable to other potentially effective and reasonably feasible alternatives considered by us.

This proposed rule is not subject to the Executive Order because it is not economically significant as defined in E.O. 12866.

NHTSA has examined today's proposed rule pursuant to Executive Order 13132 (64 FR 43255, August 10, 1999) and concluded that no additional consultation with States, local governments or their representatives is mandated beyond the rulemaking process. The agency has concluded that the proposed rule would not have federalism implications because the proposed rule would not have ''substantial direct effects on the States, on the relationship between the national government and the States, or on the distribution of power and responsibilities among the various levels of government.'' This proposed rule would not impose any requirements on anyone. Businesses will be affected only if they choose to manufacture or test with the dummy.

Further, no consultation is needed to discuss the preemptive effect of today's proposed rule. NHTSA's safety standards can have preemptive effect in two ways. This proposed rule would amend 49 CFR Part 572 and is not a safety standard.[30] This Part 572 proposed rule would not impose any requirements on anyone.

Civil Justice Reform

With respect to the review of the promulgation of a new regulation, section 3(b) of Executive Order 12988, ''Civil Justice Reform'' (61 FR 4729, February 7, 1996) requires that Executive agencies make every reasonable effort to ensure that the regulation: (1) Clearly specifies the preemptive effect; (2) clearly specifies the effect on existing Federal law or regulation; (3) provides a clear legal standard for affected conduct, while promoting simplification and burden reduction; (4) clearly specifies the retroactive effect, if any; (5) adequately defines key terms; and (6) addresses other important issues affecting clarity and general draftsmanship under any guidelines issued by the Attorney General. This document is consistent with that requirement.

Pursuant to this Order, NHTSA notes as follows.

The issue of preemption is discussed above in connection with E.O. 13132. NHTSA notes further that there is no requirement that individuals submit a petition for reconsideration or pursue other administrative proceeding before they may file suit in court.

Paperwork Reduction Act

Under the Paperwork Reduction Act of 1995, a person is not required to respond to a collection of information by a Federal agency unless the collection displays a valid control number from the Office of Management and Budget (OMB). This proposed rule would not have any requirements that are considered to be information

[30] With respect to the safety standards, the National Traffic and Motor Vehicle Safety Act contains an express preemptive provision: ''When a motor vehicle safety standard is in effect under this chapter, a State or a political subdivision of a State may prescribe or continue in effect a standard applicable to the same aspect of performance of a motor vehicle or motor vehicle equipment only if the standard is identical to the standard prescribed under this chapter.'' 49 U.S.C. 30103(b)(1). Second, the Supreme Court has recognized the possibility of implied preemption: State requirements imposed on motor vehicle manufacturers, including sanctions imposed by State tort law, can stand as an obstacle to the accomplishment and execution of a NHTSA safety standard. When such a conflict exists, the Supremacy Clause of the Constitution makes the State requirements unenforceable. *See Geier* v. *American Honda Motor Co.,* 529 U.S. 861 (2000).

collection requirements as defined by the OMB in 5 CFR Part 1320.

National Technology Transfer and Advancement Act

Section 12(d) of the National Technology Transfer and Advancement Act of 1995 (NTTAA), Public Law 104–113, section 12(d) (15 U.S.C. 272) directs NHTSA to use voluntary consensus standards in its regulatory activities unless doing so would be inconsistent with applicable law or otherwise impractical. Voluntary consensus standards are technical standards (e.g., materials specifications, test methods, sampling procedures, and business practices) that are developed or adopted by voluntary consensus standards bodies. The NTTAA directs NHTSA to provide Congress, through OMB, explanations when the agency decides not to use available and applicable voluntary consensus standards.

The following voluntary consensus standards have been used in developing the Q3s:

- SAE Recommended Practice J211, Rev. Mar 95, ''Instrumentation for Impact Tests—Part 1—Electronic Instrumentation''; and,
- SAE J1733 of 1994–12 ''Sign Convention for Vehicle Crash Testing.''

Unfunded Mandates Reform Act

Section 202 of the Unfunded Mandates Reform Act of 1995 (UMRA), Public Law 104–4, requires Federal agencies to prepare a written assessment of the costs, benefits, and other effects of proposed or final rules that include a Federal mandate likely to result in the expenditure by State, local, or tribal governments, in the aggregate, or by the private sector, of more than $100 million annually (adjusted for inflation with base year of 1995). Before promulgating a NHTSA rule for which a written statement is needed, section 205 of the UMRA generally requires the agency to identify and consider a reasonable number of regulatory alternatives and adopt the least costly, most cost-effective, or least burdensome alternative that achieves the objectives of the rule.

This proposed rule would not impose any unfunded mandates under the UMRA. This proposed rule does not meet the definition of a Federal mandate because it does not impose requirements on anyone. It amends 49 CFR Part 572 by adding design and performance specifications for a 3-year-old child side impact test dummy that the agency could use in FMVSS No. 213 and for research purposes. This proposed rule would affect only those businesses that choose to manufacture or test with the dummy. It would not result in costs of $100 million or more to either State, local, or tribal governments, in the aggregate, or to the private sector.

Plain Language

Executive Order 12866 requires each agency to write all rules in plain language. Application of the principles of plain language includes consideration of the following questions:

Has the agency organized the material to suit the public's needs?

Are the requirements in the rule clearly stated?

Does the rule contain technical language or jargon that is not clear?

Would a different format (grouping and order of sections, use of headings, paragraphing) make the rule easier to understand?

Would more (but shorter) sections be better?

Could the agency improve clarity by adding tables, lists, or diagrams?

What else could the agency do to make this rulemaking easier to understand?

If you have any responses to these questions, please send them to NHTSA.

Regulation Identifier Number

The Department of Transportation assigns a regulation identifier number (RIN) to each regulatory action listed in the Unified Agenda of Federal Regulations. The Regulatory Information Service Center publishes the Unified Agenda in April and October of each year. You may use the RIN contained in the heading at the beginning of this document to find this action in the Unified Agenda.

XI. Public Participation

How do I prepare and submit comments?

Your comments must be written and in English. To ensure better that your comments are correctly filed in the Docket, please include the docket number of this document in your comments.

Your comments must not be more than 15 pages long. (49 CFR 553.21). We established this limit to encourage you to write your primary comments in a concise fashion. However, you may attach necessary additional documents to your comments. There is no limit on the length of the attachments.

Comments may also be submitted to the docket electronically by logging into *http://www.regulations.gov.* Follow the online instructions for submitting comments.

Please note that pursuant to the Data Quality Act, in order for substantive data to be relied upon and used by the agency, it must meet the information quality standards set forth in the OMB and DOT Data Quality Act guidelines. Accordingly, we encourage you to consult the guidelines in preparing your comments. OMB's guidelines may be accessed at *http://www.whitehouse.gov/omb/fedreg/reproducible.html.*

How can I be sure that my comments were received?

If you wish the Docket Management Facility to notify you upon its receipt of your comments, enclose a self-addressed, stamped postcard in the envelope containing your comments. Upon receiving your comments, the Docket Management Facility will return the postcard by mail.

How do I submit confidential business information?

If you wish to submit any information under a claim of confidentiality, you should submit three copies of your complete submission, including the information you claim to be confidential business information, to the Chief Counsel's office, NHTSA, at the address given above under **FOR FURTHER INFORMATION CONTACT**. In addition, you should submit two copies, from which you have deleted the claimed confidential business information, to the Docket Management Facility at the address given above under **ADDRESSES**. When you send a comment containing information claimed to be confidential business information, you should include a cover letter setting forth the information specified in our confidential business information regulation. (49 CFR Part 512.)

Will the agency consider late comments?

We will consider all comments that the docket receives before the close of business on the comment closing date indicated above under **DATES**. To the extent possible, we will also consider comments received after that date. If the docket receives a comment too late for us to consider in developing a final rule (assuming that one is issued), we will consider that comment as an informal suggestion for a future rulemaking action.

How can I read the comments submitted by other people?

You may read the comments received by the Docket Management Facility at the address given above under **ADDRESSES**. The hours of the Docket are indicated above in the same location. You may also see the comments on the Internet. To read the comments on the

Internet, go to *http://www.regulations.gov.* Follow the online instructions for accessing the dockets.

Please note that even after the comment closing date, we will continue to file relevant information in the docket as it becomes available. Further, some people may submit late comments. Accordingly, we recommend that you periodically check the docket for new material.

Anyone is able to search the electronic form of all comments received into any of our dockets by the name of the individual submitting the comment (or signing the comment, if submitted on behalf of an association, business, labor union, etc.). You may review DOT's complete Privacy Act Statement in the **Federal Register** published on April 11, 2000 (Volume 65, Number 70; Pages 19477–78).

List of Subjects in 49 CFR Part 572

Motor vehicle safety, Incorporation by reference.

In consideration of the foregoing, NHTSA proposes to amend 49 CFR Part 572 as follows:

PART 572—ANTHROPOMORPHIC TEST DEVICES

■ 1. The authority citation for Part 572 would be amended to read as follows:

Authority: 49 U.S.C. 322, 30111, 30115, 30117 and 30166; delegation of authority at 49 CFR 1.95.

■ 2. 49 CFR Part 572 would be amended by adding a new Subpart W consisting of 572.210–572.219 to read as follows:

Subpart W—Q3s Three-Year-Old Child Test Dummy

Secs.

572.210 Incorporation by reference.
572.211 General description.
572.212 Head assembly and test procedure.
572.213 Neck assembly and test procedure.
572.214 Shoulder assembly and test procedure.
572.215 Thorax with arm assembly and test procedure.
572.216 Thorax without arm assembly and test procedure.
572.217 Lumbar spine assembly and test procedure.
572.218 Pelvis assembly and test procedure.
572.219 Test conditions and instrumentation.
Appendix—Figures to Subpart W of Part 572

§ 572.210 Incorporation by reference.

(a) Certain material is incorporated by reference (IBR) into this part with the approval of the Director of the Federal Register under 5 U.S.C. 552(a) and 1 CFR part 51. To enforce any edition other than that specified in this section, NHTSA must publish notice of change in the **Federal Register** and the material must be available to the public. All approved material is available for inspection at the Department of Transportation, Docket Operations, Room W12–140, telephone 202–366–9826, and is available from the sources listed below. The material is available in electronic format through Regulations.gov, call 1–877–378–5457 or go to *www.regulations.gov.* It is also available for inspection at the National Archives and Records Administration (NARA). For information on the availability of this material at NARA, call 202–741–6030 or go to *http://www.archives.gov/federal-register/cfr/ibr-locations.html.*

(b) NHTSA Technical Information Services, 1200 New Jersey Ave. SE., Washington, DC 20590, telephone 202–366–5965.

(1) A parts/drawing list entitled, ''Parts/Drawings List, Part 572 Subpart W, Q3s Three-Year-Old Child Test Dummy, May 2012,'' IBR approved for § 572.211.

(2) A drawings and inspection package entitled, ''Parts List and Drawings, Part 572 Subpart W, Q3s Three-Year-Old Child Test Dummy, May 2012,'' IBR approved for § 572.211, including:

(i) Drawing No. 020–0100, Complete Assembly Q3s, IBR approved for §§ 572.211, 572.212, 572.213, 572.214, 572.215, 572.216, 572.217, 572.218, and 572.219.

(ii) Drawing No. 020–1200, Head Assembly, IBR approved for §§ 572.211, 572.212, 572.214, 572.215, 572.216, 572.218, and 572.219.

(iii) Drawing No. 020–2400, Neck Assembly, IBR approved for §§ 572.211, 572.213, 572.214, 572.215, 572.216, 572.218, and 572.219.

(iv) Drawing No. 020–9050, Headform, IBR approved for §§ 572.211, 572.213, 572.217 and 572.219.

(v) Drawing No. DL210–200, Neck Twist Fixture, IBR approved for §§ 572.211, 572.213, and 572.219.

(vi) Drawing No. 020–4500, Torso Assembly, IBR approved for §§ 572.211, 572.214, 572.215, 572.216, 572.218 and 572.219.

(vii) Drawing No. 020–6000, Lumbar Spine Assembly, IBR approved for §§ 572.211, 572.217 and 572.219.

(viii) Drawing No. 020–7500, Pelvis Assembly, IBR approved for §§ 572.211, 572.214, 572.215, 572.216, 572.218, and 572.219.

(ix) Drawing No. 020–8001, Q3s Suit, IBR approved for §§ 572.211, 572.214, 572.215, 572.216, 572.218, and 572.219.

(x) Drawing No. 020–9500, Complete Leg Assembly—left, IBR approved for §§ 572.211, 572.214, 572.215, 572.216, 572.218, and 572.219 as part of a complete dummy assembly.

(xi) Drawing No. 020–9600, Complete Leg Assembly—right, IBR approved for §§ 572.211, 572.214, 572.215, 572.216, 572.218, and 572.219 as part of a complete dummy assembly.

(xii) Drawing No. 020–9700, Complete Arm Assembly—left, IBR approved for §§ 572.211, 572.214, 572.215, 572.216, 572.218, and 572.219 as part of a complete dummy assembly.

(xiii) Drawing No. 020–9800, Complete Arm Assembly—right, IBR approved for §§ 572.211, 572.214, 572.215, 572.216, 572.218, and 572.219 as part of a complete dummy assembly.

(3) A procedures manual entitled ''Procedures for Assembly, Disassembly and Inspection (PADI) of the Q3s Child Side Impact Crash Test Dummy, September 2013,'' IBR approved for §§ 572.211 and 572.219.

(c) SAE International, 400 Commonwealth Drive, Warrendale, PA 15096, call 1–877–606–7323.

(1) SAE Recommended Practice J211, Rev. Mar 95, ''Instrumentation for Impact Tests—Part 1—Electronic Instrumentation,'' IBR approved for § 572.219;

(2) SAE Information Report J1733 of 1994–12, ''Sign Convention for Vehicle Crash Testing,'' IBR approved for § 572.219.

§ 572.211 General description.

(a) The Q3s Three-Year-Old Child Test Dummy is defined by drawings and specifications containing the following materials:

(1) The parts enlisted in ''Parts List and Drawings, Part 572 Subpart W, Q3s Three-Year-Old Child Test Dummy, September 2013'' (incorporated by reference, see § 572.210).

(2) The engineering drawings and specifications contained in ''Parts List and Drawings, Part 572 Subpart W, Q3s Three-Year-Old Child Test Dummy, September 2013,'' which includes the engineering drawings and specifications described in Drawing 020–0000, the titles of which are listed in Table A, and,

(3) A manual entitled ''Procedures for Assembly, Disassembly and Inspection (PADI) of the Q3s Child Side Impact Crash Test Dummy, September 2013.''

TABLE A TO § 572.211

Component assembly	Drawing number
(i) Head Assembly	020–1200
(ii) Neck Assembly	020–2400
(iii) Torso Assembly	020–4500
(iv) Lumbar Spine Assembly.	020–6000
(v) Pelvis Assembly	020–7500

TABLE A TO § 572.211—Continued

Component assembly	Drawing number
(vi) Complete Leg Assembly—left.	020–9500
(vii) Complete Leg Assembly—right.	020–9600
(viii) Complete Arm Assembly—left.	020–9700
(ix) Complete Arm Assembly—right.	020–9800

(b) The structural properties of the dummy are such that the dummy conforms to this Subpart in every respect before use in any test.

§ 572.212 Head assembly and test procedure.

(a) The head assembly for this test consists of the complete head (drawing 020–1200) with head accelerometer assembly (drawing 020–1013A), and a half mass simulated upper neck load cell (drawing 020–1050) (all incorporated by reference, see § 572.210).

(b) When the head assembly is tested according to the test procedure in paragraph (c) of this section, it shall have the following characteristics:

(1) Frontal head qualification test. When the head assembly is dropped from a height of 376.0 ± 1.0 mm (14.8 ± 0.04 in) in accordance with subsection (c) of this section, the peak resultant acceleration at the location of the accelerometers at the head CG shall have a value between 250 G and 297 G. The resultant acceleration vs. time history curve shall be unimodal; oscillations occurring after the main pulse must be less than 10 percent of the peak resultant acceleration. The lateral acceleration shall not exceed 15 G (zero to peak).

(2) Lateral head qualification test. When the head assembly is dropped from a height of 200.0 ± 1.0 mm (7.87 ± 0.04 in) in accordance with subsection (c) of this section, the peak resultant acceleration at the location of the accelerometers at the head CG shall have a value between 113 G and 140 G. The resultant acceleration vs. time history curve shall be unimodal; oscillations occurring after the main pulse must be less than 10 percent of the peak resultant acceleration. The X-component acceleration shall not exceed 20 G (zero to peak).

(c) *Test procedure:* The test procedure for the head assembly is as follows:

(1) Soak the head assembly in a controlled environment at any temperature between 18.9 and 25.6 °C (66 and 78 °F) and a relative humidity from 10 to 70 percent for at least four hours prior to a test.

(2) Prior to the test, clean the impact surface of the skin and the impact plate surface with isopropyl alcohol, trichloroethane, or an equivalent. The skin of the head and the impact plate surface must be clean and dry for testing.

(3)(i) For the frontal head test, suspend and orient the head assembly with the forehead facing the impact surface as shown in Figure W1. The lowest point on the forehead must be 376.0 ± 1.0 mm (14.8 ± 0.04 in) from the impact surface. Assure that the head is horizontal laterally. Adjust the head angle so that the upper neck load cell simulator is 28 ± 2 degrees forward from the vertical while assuring that the head remains horizontal laterally.

(ii) For the lateral head test, the head is dropped on the aspect that opposes the primary load vector of the ensuing full scale test for which the dummy is being qualified. A left drop set up that is used to qualify the dummy for an ensuing full scale left side impact is depicted in Figure W2. A right drop set-up would be the mirror image of that shown in Figure W2. Suspend and orient the head assembly as shown in Figure W2. The lowest point on the impact side of the head must be 200.0 ± 1.0 mm (7.87 ± 0.04 in) from the impact surface. Assure that the head is horizontal in the fore-aft direction. Adjust the head angle so that the head base plane measured from the base surface of the upper neck load cell simulator is 35 ± 2 degrees forward from the vertical while assuring that the head remains horizontal in the fore-aft direction.

(4) Drop the head assembly from the specified height by means that ensure a smooth, instant release onto a rigidly supported flat horizontal steel plate which is 50.8 mm (2 in) thick and 610 mm (24 in) square. The impact surface shall be clean, dry and have a micro finish of not less than 203.2×10^{-6} mm (8 micro inches) (RMS) and not more than $2{,}032.0 \times 10^{-6}$ mm (80 micro inches) (RMS).

(5) Allow at least 2 hours between successive tests on the same head.

§ 572.213 Neck assembly and test procedure.

(a)(1) The neck and headform assembly (refer to § 572.210(b)(2)(iii) and § 572.210(b)(2)(iv)) for the purposes of the fore-aft neck flexion and lateral neck flexion qualification tests, as shown in Figures W3 and W4, consists of the headform (drawing 020–9050, sheet 1) with angular rate sensor installed (drawing SA572–S58), six-channel neck/lumbar load cell (drawing SA572–S8), neck assembly (drawing 020–2400), neck/torso interface plate (drawing 020–9056) and pendulum interface plate (drawing 020–9051) with angular rate sensor installed (drawing SA572–S58) (all incorporated by reference, see § 572.210).

(2) The neck assembly (refer to § 572.210(b)(2)(iii) and § 572.210(b)(2)(v)) for the purposes of the neck torsion qualification test, as shown in Figure W5, consists of the neck twist fixture (drawing DL210–200) with rotary potentiometer installed (drawing SA572–S51), neck adaptor plate assembly (drawing DL210–220), neck assembly (drawing 020–2400), six-channel neck/lumbar load cell (drawing SA572–S8), and twist fixture end plate (drawing DL210–210) (all incorporated by reference, see § 572.210).

(b) When the neck and headform assembly as defined in § 572.213(a)(1), or the neck assembly as defined in § 572.213(a)(2), is tested according to the test procedure in paragraph (c) of this section, it shall have the following characteristics:

(1) Fore-aft neck flexion qualification test.

(i) Plane D, referenced in Figure W3, shall rotate in the direction of pre-impact flight with respect to the pendulum's longitudinal centerline between 70 degrees and 82 degrees, which shall occur between 55 and 63 ms from time zero. The peak moment, measured by the neck transducer (drawing SA572–S8) (incorporated by reference, see § 572.210) shall have a value between 41 N-m (30.2 ft-lbf) and 51 N-m (37.6 ft-lbf) occurring between 49 and 62 ms from time zero.

(ii) The decaying headform rotation vs. time curve shall cross the zero angle with respect to its initial position at time of impact relative to the pendulum centerline between 50 to 54 ms after the time the peak rotation value is reached.

(iii) All instrumentation data channels are defined to be zero when the longitudinal centerline of the neck and pendulum are parallel.

(iv) The headform rotation shall be calculated by the following formula with the integration beginning at time zero:

$$\text{Headform rotation (deg)} = \int [(\text{Headform Angular Rate})_y - (\text{Pendulum Angular Rate})_y]\, dt$$

(v) $(\text{Headform Angular Rate})_y$ is the angular rate about the y-axis in deg/sec measured on the headform (drawing 020–9050, sheet 1), and $(\text{Pendulum Angular Rate})_y$ is the angular rate about the y-axis in deg/sec measured on the pendulum interface plate (drawing 020–9051) (incorporated by reference, see § 572.210).

(2) Lateral neck flexion qualification test.

(i) Plane D, referenced in Figure W4, shall rotate in the direction of pre-impact flight with respect to the pendulum's longitudinal centerline between 77 degrees and 88 degrees, which shall occur between 65 and 72 ms from time zero. The peak moment, measured by the neck transducer (drawing SA572–S8) (incorporated by reference, see § 572.210) shall have a value between 25 N-m (18.4 ft-lbf) and 32 N-m (23.6 ft-lbf) occurring between 66 and 73 ms from time zero.

(ii) The decaying headform rotation vs. time curve shall cross the zero angle with respect to its initial position at time of impact relative to the pendulum centerline between 63 to 69 ms after the time the peak rotation value is reached.

(iii) All instrumentation data channels are defined to be zero when the longitudinal centerline of the neck and pendulum are parallel.

(iv) The headform rotation shall be calculated by the following formula with the integration beginning at time zero:

$$\text{Headform rotation (deg)} = \int [(\text{Headform Angular Rate})_y - (\text{Pendulum Angular Rate})_y]\, dt$$

(v) $(\text{Headform Angular Rate})_y$ is the angular rate about the y-axis in deg/sec measured on the headform (drawing 020–9050, sheet 1), and $(\text{Pendulum Angular Rate})_y$ is the angular rate about the y-axis in deg/sec measured on the pendulum interface plate (drawing 020–9051) (incorporated by reference, see § 572.210).

(3) Neck torsion qualification test.

(i) The neck twist fixture (drawing DL210–200), referenced in Figure W5, shall rotate in the direction of pre-impact flight with respect to the pendulum's longitudinal centerline between 75 degrees and 93 degrees, as measured by the rotary potentiometer (drawing SA572–S51), and shall occur between 91 and 113 ms from time zero. The peak moment, measured by the neck transducer (drawing SA572–S8) shall have a value between 8 N-m (5.9 ft-lbf) and 10 N-m (7.4 ft-lbf) occurring between 85 and 105 ms from time zero) (all incorporated by reference, see § 572.210).

(ii) The decaying neck twist fixture rotation vs. time curve shall cross the zero angle with respect to its initial position at time of impact relative to the pendulum centerline between 84 to 103 ms after the time the peak rotation value is reached.

(iii) All instrumentation data channels are defined to be zero when the zero pins are installed such that the neck is not in torsion.

(iv) Time zero is defined as the time of initial contact between the pendulum striker plate and the honeycomb material. All data channels shall be at the zero level at this time.

(c) *Test procedure:* The test procedure for the neck assembly is as follows:

(1) Soak the neck assembly in a controlled environment at any temperature between 20.6 and 22.2 °C (69 and 72 °F) and a relative humidity between 10 and 70 percent for at least four hours prior to a test.

(2)(i) For the fore-aft neck flexion test, mount the neck and headform assembly, defined in subsection (a)(1) of this section, on the pendulum described in Figure 22 of 49 CFR 572 so that the midsagittal plane of the headform is vertical and coincides with the plane of motion of the pendulum, and with the neck placement such that the front side of the neck is closest to the honeycomb material.

(ii) For the lateral neck flexion test, the test is carried out in the direction opposing the primary load vector of the ensuing full scale test for which the dummy is being qualified. A right flexion test set-up that is used to qualify the dummy for an ensuing full scale right side impact is depicted in Figure W4. A left flexion test set-up would be a mirror image of that shown in Figure W4. Mount the neck and headform assembly, defined in subsection (a)(1) of this section, on the pendulum described in Figure 22 of 49 CFR 572 so that the midsagittal plane of the headform is vertical and coincides with the plane of motion of the pendulum, and with the neck placement such that the right (or left) side of the neck is closest to the honeycomb material.

(iii) For the neck torsion test, the test is carried out in the direction opposing the primary load vector of the ensuing full scale test for which the dummy is being qualified. A right torsion test set-up that is used to qualify the dummy for an ensuing full scale right side impact is depicted in Figure W5. A left flexion test set-up would be a mirror image of that shown in Figure W5. Mount the neck assembly, defined in subsection (a)(2) of this section, on the pendulum described in Figure 22 of 49 CFR 572, as shown in Figure W5 of this subpart.

(3)(i) Release the pendulum and allow it to fall freely from a height to achieve an impact velocity of 4.7 ± 0.1 m/s (15.6 ± 0.3 ft/s) for fore-aft flexion, 3.8 ± 0.05 m/s (12.5 ± 0.2 ft/s) for lateral flexion, and 3.6 ± 0.1 m/s (11.8 ± 0.3 ft/s) for torsion, measured by an accelerometer mounted on the pendulum as shown in Figure 22 of this Part 572 at time zero.

(ii) Stop the pendulum from the initial velocity with an acceleration vs. time pulse that meets the velocity change as specified in Table B of this section. Integrate the pendulum accelerometer data channel to obtain the velocity vs. time curve beginning at time zero.

TABLE B TO § 572.213

Time (ms)	Fore-aft flexion		Time (ms)	Lateral flexion		Time (ms)	Torsion	
	m/s	ft/s		m/s	ft/s		m/s	ft/s
10	1.1–2.1	3.6–6.9	10	1.7–2.2	5.6–7.2	10	0.9–1.3	3.0–4.3
20	2.8–3.8	9.2–12.5	15	2.5–3.0	8.2–9.8	15	1.4–2.0	4.6–6.6
30	4.1–5.1	13.5–16.7	20	3.4–3.9	11.2–12.8	20	2.0–2.6	6.6–8.5

§ 572.214 Shoulder assembly and test procedure.

(a) The shoulder assembly for this test consists of the torso assembly (drawing 020–4500) with string pot assembly (drawing SA572–S38 or SA572–S39) installed (incorporated by reference, see § 572.210).

(b) When the center of the shoulder of a completely assembled dummy (drawing 020–0100) (incorporated by reference, see § 572.210) is impacted laterally by a test probe conforming to § 572.219, at 3.6 ± 0.1 m/s (11.8 ± 0.3 ft/s) according to the test procedure in paragraph (c) of this section:

(1) Maximum lateral shoulder displacement (compression) relative to the spine, measured with the string pot assembly (drawing SA572–S38 or SA572–S39) (incorporated by reference, see § 572.210), must not be less than 16 mm (0.63 in) and not more than 21 mm (0.83 in). The peak force, measured by the impact probe as defined in § 572.219

and calculated in accordance with paragraph (b)(2) of this section, shall have a value between 1.24 kN (279 lbf) and 1.35 kN (303 lbf).

(2) The force shall be calculated by the product of the impactor mass and its measured deceleration.

(c) *Test procedure:* The test procedure for the shoulder assembly is as follows:

(1) The dummy is clothed in the Q3s suit (drawing 020–8001) (incorporated by reference, see § 572.210). No additional clothing or shoes are placed on the dummy.

(2) Soak the dummy in a controlled environment at any temperature between 20.6 and 22.2 °C (69 and 72 °F) and a relative humidity from 10 to 70 percent for at least four hours prior to a test.

(3) The shoulder test is carried out in the direction opposing the primary load vector of the ensuing full scale test for which the dummy is being qualified. A left shoulder test set-up that is used to qualify the dummy for an ensuing full scale left side impact is depicted in Figure W6. A right shoulder set-up would be a mirror image of that shown in Figure W6. Seat the dummy on the qualification bench described in Figure V3 of 49 CFR 572.194, the seat pan and seat back surfaces of which are covered with thin sheets of PTFE (Teflon) (nominal stock thickness: 2 to 3 mm) (3/32- to 1/8-inch) along the impact side of the bench.

(4) Position the dummy on the bench as shown in Figure W6, with the ribs making contact with the seat back oriented 24.6 degrees relative to vertical, the legs extended forward along the seat pan oriented 21.6 degrees relative to horizontal with the knees spaced 40 mm (1.57 in) apart, and the arms positioned so that the upper arms are parallel to the seat back (± 2 degrees) and the lower arms are perpendicular to the upper arms.

(5) The target point of the impact is a point on the shoulder that is 15 mm above and perpendicular to the midpoint of a line connecting the centers of the bolt heads of the two lower bolts (part #5000010) that connect the upper arm assembly (020–9750) to the shoulder ball retaining ring (020–3533).

(6) Impact the shoulder with the test probe so that at the moment of contact the probe's longitudinal centerline should be horizontal (± 1 degrees), and the centerline of the probe should be within 2 mm (0.08 in) of the target point.

(7) Guide the test probe during impact so that there is no significant lateral, vertical, or rotational movement.

(8) No suspension hardware, suspension cables, or any other attachments to the probe, including the velocity vane, shall make contact with the dummy during the test.

§ 572.215 Thorax with arm assembly and test procedure.

(a) The thorax assembly for this test consists of the torso assembly (drawing 020–4500) with IR–TRACC (drawing SA572–S37) (incorporated by reference, see § 572.210) installed.

(b) When the thorax of a completely assembled dummy (drawing 020–0100) (incorporated by reference, see § 572.210) is impacted laterally by a test probe conforming to § 572.219 at 5.0 ± 0.1 m/s (16.4 ± 0.3 ft/s) according to the test procedure in paragraph (c) of this section:

(1) Maximum lateral thorax displacement (compression) relative to the spine, measured with the IR–TRACC (drawing SA572–S37) and processed as set out in the PADI (all incorporated by reference, see § 572.210), shall have a value between 23 mm (0.91 in) and 28 mm (1.10 in). The peak force occurring after 5 ms, measured by the impact probe as defined in § 572.219 and calculated in accordance with paragraph (b)(2) of this section, shall have a value between 1.38 kN (310 lbf) and 1.69 kN (380 lbf).

(2) The force shall be calculated by the product of the impactor mass and its measured deceleration.

(3) Time zero is defined as the time of contact between the impact probe and the arm. All channels should be at a zero level at this point.

(c) *Test procedure:* The test procedure for the thorax with arm assembly is as follows:

(1) The dummy is clothed in the Q3s suit (drawing 020–8001) (incorporated by reference, see § 572.210). No additional clothing or shoes are placed on the dummy.

(2) Soak the dummy in a controlled environment at any temperature between 20.6 and 22.2 °C (69 and 72 °F) and a relative humidity from 10 to 70 percent for at least four hours prior to a test.

(3) The test is carried out in the direction opposing the primary load vector of the ensuing full scale test for which the dummy is being qualified. A left thorax test set-up that is used to qualify the dummy for an ensuing full scale left side impact is depicted in Figure W7. A right thorax set-up would be a mirror image of that shown in Figure W7. Seat the dummy on the qualification bench described in Figure V3 of 49 CFR 572.194, the seat pan and seat back surfaces of which are covered with thin sheets of PTFE (Teflon) (nominal stock thickness: 2 to 3 mm (3/32- to 1/8-inch)) along the impact side of the bench.

(4) Position the dummy on the bench as shown in Figure W7, with the ribs making contact with the seat back oriented 24.6 degrees relative to vertical, the legs extended forward along the seat pan oriented 21.6 degrees relative to horizontal with the knees spaced 40 mm (1.57 in) apart. On the non-impact side of the dummy, the long axis of the upper arm is positioned parallel to the seat back (± 2 degrees). On the impact side, the upper arm is positioned such that the target point intersects its long axis as described in (5) below. The long axis of the upper arm is defined by section line A–A in drawing 020–9750 (incorporated by reference, see § 572.210). Both of the lower arms are set perpendicular to the upper arms.

(5) The target point of the impact is the point of intersection on the lateral aspect of the upper arm and a line projecting from the thorax of the dummy. The projecting line is horizontal, runs parallel to the coronal plane of the dummy, and passes through the midpoint of a line connecting the centers of the bolt heads of the two IR–TRACC bolts (part #5000646). The projected line should intersect the upper arm within 2 mm (0.80 in) of its long axis.

(6) Impact the arm with the test probe so that at the moment of contact the probe's longitudinal centerline should be horizontal (± 1 degrees), and the centerline of the probe should be within 2 mm (0.80 in) of the target point.

(7) Guide the test probe during impact so that there is no significant lateral, vertical, or rotational movement.

(8) No suspension hardware, suspension cables, or any other attachments to the probe, including the velocity vane, shall make contact with the dummy during the test.

§ 572.216 Thorax without arm assembly and test procedure.

(a) The thorax assembly for this test consists of the torso assembly (drawing 020–4500) with IR–TRACC (drawing SA572–S37) (incorporated by reference, see § 572.210) installed.

(b) When the thorax of a completely assembled dummy (drawing 020–0100) with the arm (drawing 020–9700 or 020–9800) on the impacted side removed is impacted laterally by a test probe conforming to § 572.219 at 3.3 ± 0.1 m/s (10.8 ± 0.3 ft/s) according to the test procedure in paragraph (c) of this section:

(1) Maximum lateral thorax displacement (compression) relative to

the spine, measured with the IR–TRACC (drawing SA572–S37) and processed as set out in the PADI (all incorporated by reference, see § 572.210), shall have a value between 24 mm (0.94 in) and 31 mm (1.22 in). The peak force, measured by the impact probe as defined in § 572.219 and calculated in accordance with paragraph (b)(2) of this section, shall have a value between 620 N (139 lbf) and 770 N (173 lbf).

(2) The force shall be calculated by the product of the impactor mass and its measured deceleration.

(c) *Test procedure:* The test procedure for the thorax without arm assembly is as follows:

(1) The dummy is clothed in the Q3s suit (drawing 020–8001) (incorporated by reference, see § 572.210). No additional clothing or shoes are placed on the dummy.

(2) Soak the dummy in a controlled environment at any temperature between 20.6 and 22.2 °C (69 and 72 °F) and a relative humidity from 10 to 70 percent for at least four hours prior to a test.

(3) The test is carried out in the direction opposing the primary load vector of the ensuing full scale test for which the dummy is being qualified. A left thorax test set-up that is used to qualify the dummy for an ensuing full scale left side impact is depicted in Figure W8. A right thorax set-up would be a mirror image of that shown in Figure W8. Seat the dummy on the qualification bench described in Figure V3 of 49 CFR 572.194, the seat pan and seat back surfaces of which are covered with thin sheets of PTFE (Teflon) (nominal stock thickness: 2 to 3 mm (3/32- to 1/8-inch)) along the impact side of the bench.

(4) Position the dummy on the bench as shown in Figure W8, with the ribs making contact with the seat back oriented 24.6 degrees relative to vertical, the legs extended forward along the seat pan oriented 21.6 degrees relative to horizontal with the knees spaced 40 mm (1.57 in) apart, and the arm on the non-impacted side positioned so that the upper arm is parallel (± 2 degrees) to the seat back and the lower arm perpendicular to the upper arm.

(5) The target point of the impact is the midpoint of a line between the centers of the bolt heads of the two IR–TRACC bolts (part #5000646).

(6) Impact the thorax with the test probe so that at the moment of contact the probe's longitudinal centerline should be horizontal (± 1 degrees), and the centerline of the probe should be within 2 mm (0.08 in) of the target point.

(7) Guide the test probe during impact so that there is no significant lateral, vertical, or rotational movement.

(8) No suspension hardware, suspension cables, or any other attachments to the probe, including the velocity vane, shall make contact with the dummy during the test.

§ 572.217 Lumbar spine assembly and test procedure.

(a) The lumbar spine and headform assembly (refer to § 572.210(b)(2)(iv) and § 572.210(a)(2)(vii)) for the purposes of the fore-aft lumbar flexion and lateral lumbar flexion qualification tests, as shown in Figures W9 and W10, consists of the headform (drawing 020–9050, sheet 2) with angular rate sensor installed (drawing SA572–S58), six-channel neck/lumbar load cell (drawing SA572–S8), lumbar spine assembly (drawing 020–6000), lumbar interface plate (drawing 020–9062) and pendulum interface plate (drawing 020–9051) with angular rate sensor installed (drawing SA572–S58) (all incorporated by reference, see § 572.210).

(b) When the lumbar spine and headform assembly is tested according to the test procedure in paragraph (c) of this section, it shall have the following characteristics:

(1) Fore-aft lumbar flexion qualification test.

(i) Plane D, referenced in Figure W9, shall rotate in the direction of pre-impact flight with respect to the pendulum's longitudinal centerline between 48 degrees and 57 degrees, which shall occur between 52 and 59 ms from time zero. The peak moment, measured by the neck/lumbar transducer (drawing SA572–S8) (incorporated by reference, see § 572.210) shall have a value between 78 N-m (57.5 ft-lbf) and 94 N-m (69.3 ft-lbf) occurring between 46 and 57 ms from time zero.

(ii) The decaying headform rotation vs. time curve shall cross the zero angle with respect to its initial position at time of impact relative to the pendulum centerline between 50 to 56 ms after the time the peak rotation value is reached.

(iii) All instrumentation data channels are defined to be zero when the longitudinal centerline of the lumbar spine and pendulum are parallel.

(iv) The headform rotation shall be calculated by the following formula with the integration beginning at time zero:

$$\text{Headform rotation (deg)} = \int [(\text{Headform Angular Rate})_y - (\text{Pendulum Angular Rate})_y]\, dt$$

(v) $(\text{Headform Angular Rate})_y$ is the angular rate about the y-axis in deg/sec measured on the headform (drawing 020–9050, sheet 2), and $(\text{Pendulum Angular Rate})_y$ is the angular rate about the y-axis in deg/sec measured on the pendulum interface plate (drawing 020–9051) (all incorporated by reference, see § 572.210).

(2) Lateral lumbar flexion qualification test.

(i) Plane D, referenced in Figure W10, shall rotate in the direction of pre-impact flight with respect to the pendulum's longitudinal centerline between 47 degrees and 59 degrees, which shall occur between 50 and 59 ms from time zero. The peak moment, measured by the neck/lumbar transducer (drawing SA572–S8) (incorporated by reference, see § 572.210) shall have a value between 78 N-m (57.5 ft-lbf) and 97 N-m (71.5 ft-lbf) occurring between 46 and 57 ms from time zero.

(ii) The decaying headform rotation vs. time curve shall cross the zero angle with respect to its initial position at time of impact relative to the pendulum centerline between 47 to 59 ms after the time the peak rotation value is reached.

(iii) All instrumentation data channels are defined to be zero when the longitudinal centerline of the lumbar spine and pendulum are parallel.

(iv) The headform rotation shall be calculated by the following formula with the integration beginning at time zero:

$$\text{Headform rotation (deg)} = \int [(\text{Headform Angular Rate})_y - (\text{Pendulum Angular Rate})_y]\, dt$$

(v) $(\text{Headform Angular Rate})_y$ is the angular rate about the y-axis in deg/sec measured on the headform (drawing 020–9050, sheet 2), and $(\text{Pendulum Angular Rate})_y$ is the angular rate about the y-axis in deg/sec measured on the pendulum interface plate (drawing 020–9051) (all incorporated by reference, see § 572.210).

(c) *Test procedure:* The test procedure for the lumbar spine assembly is as follows:

(1) Soak the lumbar spine assembly in a controlled environment at any temperature between 20.6 and 22.2 °C (69 and 72 °F) and a relative humidity between 10 and 70 percent for at least four hours prior to a test.

(2)(i) For the fore-aft lumbar flexion test, mount the lumbar spine and headform assembly, defined in subsection (a) of this section, on the pendulum described in Figure 22 of 49 CFR 572 so that the midsagittal plane of the headform is vertical and coincides with the plane of motion of the pendulum, and with the lumbar spine placement such that the front side of the lumbar spine is closest to the honeycomb material.

(ii) For the lateral lumbar flexion test, the test is carried out in the direction opposing the primary load vector of the ensuing full scale test for which the dummy is being qualified. A right flexion test set-up that is used to qualify the dummy for an ensuing a full scale right side impact is depicted in Figure W10. A left flexion test set-up would be a mirror image of that shown in Figure W10. Mount the lumbar spine and headform assembly, defined in subsection (a)(1) of this section, on the pendulum described in Figure 22 of 49 CFR 572 so that the midsagittal plane of the headform is vertical and coincides with the plane of motion of the pendulum, and with the lumbar spine placement such that the right (or left) side of the lumbar spine is closest to the honeycomb material.

(3)(i) Release the pendulum and allow it to fall freely from a height to achieve an impact velocity of 4.4 ± 0.1 m/s (14.4 ± 0.3 ft/s), measured by an accelerometer mounted on the pendulum as shown in Figure 22 of this Part 572 at time zero.

(ii) Stop the pendulum from the initial velocity with an acceleration vs. time pulse that meets the velocity change as specified in Table C of this section. Integrate the pendulum accelerometer data channel to obtain the velocity vs. time curve beginning at time zero.

TABLE C TO § 572.217

Time (ms)	Fore-aft flexion		Lateral flexion	
	m/s	ft/s	m/s	ft/s
10	1.3–1.7	4.3–5.6	1.3–1.7	4.3–5.6
20	2.7–3.7	8.9–12.1	2.7–3.7	8.9–12.1
30	4.1–4.9	13.5–16.1	4.0–4.8	13.1–15.7

§ 572.218 Pelvis assembly and test procedure.

(a) The pelvis assembly (drawing 020–7500) for this test includes a uniaxial pubic load cell (drawing SA572–S7) installed on the non-impact side of the pelvis (all incorporated by reference, see § 572.210).

(b) When the center of the pelvis of a completely assembled dummy (drawing 020–0100) (incorporated by reference, see § 572.210) is impacted laterally by a test probe conforming to § 572.219 at 4.0 ± 0.1 m/s (13.1 ± 0.3 ft/s) according to the test procedure in paragraph (c) of this section:

(1) Maximum pubic load, measured with the uniaxial pubic load cell (drawing SA572–S7) (incorporated by reference, see § 572.210), shall have a value between 700 N (157 lbf) and 870 N (196 lbf). The peak force, measured by the impact probe as defined in § 572.219 and calculated in accordance with paragraph (b)(2) of this section, shall have a value between 1.57 kN (353 lbf) and 1.81 kN (407 lbf).

(2) The force shall be calculated by the product of the impactor mass and its measured deceleration.

(c) *Test procedure:* The test procedure for the pelvis assembly is as follows:

(1) The dummy is clothed in the Q3s suit (drawing 020–8001) (incorporated by reference, see § 572.210). No additional clothing or shoes are placed on the dummy.

(2) Soak the dummy in a controlled environment at any temperature between 20.6 and 22.2 °C (69 and 72 °F) and a relative humidity from 10 to 70 percent for at least four hours prior to a test.

(3) The pelvis test is carried out in the direction opposing the primary load vector of the ensuing full scale test for which the dummy is being qualified. A left pelvis test set-up that is used to qualify the dummy for an ensuing full scale left side impact is depicted in Figure W11. A right pelvis test set-up would be a mirror image of that shown in Figure W11. Seat the dummy on the qualification bench described in Figure V3 of 49 CFR 572.194, the seat pan and seat back surfaces of which are covered with thin sheets of PTFE (Teflon) (nominal stock thickness: 2 to 3 mm (3/32- to 1/8-inch)) along the impact side of the bench.

(4) Position the dummy on the bench as shown in Figure W11, with the ribs making contact with the seat back oriented 24.6 degrees relative to vertical, the legs extended forward along the seat pan oriented 21.6 degrees relative to horizontal with the knees spaced 40 mm (1.57 in) apart. The arms should be positioned so that the arm on the non-impacted side is parallel to the seat back with the lower arm perpendicular to the upper arm, and the arm on the impacted side is positioned upwards away from the pelvis.

(5) Establish the impact point at the center of the pelvis so that the impact point of the longitudinal centerline of the probe is located 185 mm (7.28 in) from the center of the knee pivot screw (part #020–9008) and centered vertically on the femur.

(6) Impact the pelvis with the test probe so that at the moment of contact the probe's longitudinal centerline should be horizontal (± 1 degrees), and the centerline of the probe should be within 2 mm (0.08 in) of the center of the pelvis.

(7) Guide the test probe during impact so that there is no significant lateral, vertical, or rotational movement.

(8) No suspension hardware, suspension cables, or any other attachments to the probe, including the velocity vane, shall make contact with the dummy during the test.

§ 572.219 Test conditions and instrumentation.

(a) The following test equipment and instrumentation is needed for qualification as set forth in this subpart:

(1) The test probe for shoulder, thorax, and pelvis impacts is of rigid metallic construction, concentric in shape, and symmetric about its longitudinal axis. It has a mass of 3.81 ± 0.02 kg (8.40 ± 0.04 lb) and a minimum mass moment of inertia of 560 kg-cm^2 (0.407 lbf-in-sec^2) in yaw and pitch about the CG. One-third (1/3) of the weight of the suspension cables and their attachments to the impact probe is included in the calculation of mass, and such components may not exceed five percent of the total weight of the test probe. The impacting end of the probe, perpendicular to and concentric with the longitudinal axis, is at least 25.4 mm (1.0 in) long, and has a flat, continuous, and non-deformable 70.0 ± 0.25 mm (2.76 ± 0.01 in) diameter face with an edge radius between 6.4–12.7 mm (0.25 to 0.5 in). The probe's end opposite to the impact face has provisions for mounting of an accelerometer with its sensitive axis collinear with the longitudinal axis of the probe. No concentric portions of the impact probe may exceed the diameter of the impact face. The impact probe shall have a free air resonant frequency of not less than 1000 Hz, which may be determined using the procedure listed in the PADI.

(2) Head accelerometers have dimensions, response characteristics,

and sensitive mass locations specified in drawing SA572–S4 and are mounted in the head as shown in drawing 020–0100, sheet 2 of 5 (incorporated by reference, see § 572.210).

(3) The upper neck force and moment transducer has the dimensions, response characteristics, and sensitive axis locations specified in drawing SA572–S8 and is mounted in the head-neck assembly as shown in drawing 020–0100, sheet 2 of 5 (incorporated by reference, see § 572.210).

(4) The angular rate sensors for the fore-aft neck flexion and lateral neck flexion qualification tests have the dimensions and response characteristics specified in drawing SA572–S58 (incorporated by reference, see § 572.210) and are mounted in the headform and on the pendulum as shown in Figures W3, W4 of this subpart.

(5) The string pot shoulder deflection transducers have the dimensions and response characteristics specified in drawing SA572–S38 or SA572–S39 and are mounted to the torso assembly as shown in drawing 020–0100, sheet 2 of 5 (all incorporated by reference, see § 572.210).

(6) The IR–TRACC thorax deflection transducers have the dimensions and response characteristics specified in drawing SA572–S37 and are mounted to the torso assembly as shown in drawing 020–0100, sheet 2 of 5 (incorporated by reference, see § 572.210).

(7) The lumbar spine force and moment transducer has the dimensions, response characteristics, and sensitive axis locations specified in drawing SA572–S8 and is mounted in the torso assembly as shown in drawing 020–0100, sheet 2 of 5 (incorporated by reference, see § 572.210).

(8) The angular rate sensors for the fore-aft lumbar flexion and lateral lumbar flexion qualification tests have the dimensions and response characteristics specified in drawing SA572–S58 (incorporated by reference, see § 572.210) and are mounted in the headform and on the pendulum as shown in Figures W9, W10 of this subpart.

(9) The pubic force transducers have the dimensions and response characteristics specified in drawing SA572–S7 and are mounted in the torso assembly as shown in drawing 020–0100, sheet 2 of 5 (incorporated by reference, see § 572.210).

(b) The following instrumentation may be required for installation in the dummy for compliance testing. If so, it is installed during qualification procedures as described in this subpart:

(1) The optional angular rate sensors for the head have the dimensions and response characteristics specified in any of drawings SA572–S55, SA572–S56, SA572–S57 or SA572–S58 and are mounted in the head as shown in drawing 020–0100, sheet 2 of 5 (all incorporated by reference, see § 572.210).

(2) The upper spine accelerometers have the dimensions, response characteristics, and sensitive mass locations specified in drawing SA572–S4 and are mounted in the torso assembly as shown in drawing 020–0100, sheet 2 of 5 (all incorporated by reference, see § 572.210).

(3) The pelvis accelerometers have the dimensions, response characteristics, and sensitive mass locations specified in drawing SA572–S4 and are mounted in the torso assembly as shown in drawing 020–0100, sheet 2 of 5 (all incorporated by reference, see § 572.210).

(4) The T1 accelerometer has the dimensions, response characteristics, and sensitive mass location specified in drawing SA572–S4 and is mounted in the torso assembly as shown in drawing 020–0100, sheet 2 of 5 (incorporated by reference, see § 572.210).

(5) The lower neck force and moment transducer has the dimensions, response characteristics, and sensitive axis locations specified in drawing SA572–S8 and is mounted to the neck assembly as shown in drawing 020–0100, sheet 2 of 5 (incorporated by reference, see § 572.210).

(6) The tilt sensor has the dimensions and response characteristics specified in drawing SA572–S44 and is mounted to the torso assembly as shown in drawing 020–0100, sheet 2 of 5 (incorporated by reference, see § 572.210).

(c) The outputs of transducers installed in the dummy and in the test equipment specified by this part are to be recorded in individual data channels that conform to SAE Recommended Practice J211 (incorporated by reference, see § 572.210) except as noted, with channel frequency classes as follows:

(1) Pendulum acceleration, CFC 180,

(2) Pendulum angular rate, CFC 60,

(3) Neck twist fixture rotation, CFC 60,

(4) Test probe acceleration, CFC 180,

(5) Head accelerations, CFC 1000,

(6) Headform angular rate, CFC 60,

(7) Neck moments, upper and lower, CFC 600,

(7) Shoulder deflection, CFC 180,

(8) Thorax deflection, CFC 180,

(9) Upper spine accelerations, CFC 180,

(10) T1 acceleration, CFC 180,

(11) Pubic force, CFC 180,

(12) Pelvis accelerations, CFC 1000.

(d) Coordinate signs for instrumentation polarity are to conform to SAE Information Report J1733 (incorporated by reference, see § 572.210).

(e) The mountings for sensing devices have no resonant frequency less than 3 times the frequency range of the applicable channel class.

(f) Limb joints are set at one G, barely restraining the weight of the limb when it is extended horizontally. The force needed to move a limb segment is not to exceed 2G throughout the range of limb motion.

(g) Performance tests of the same component, segment, assembly, or fully assembled dummy are separated in time by not less than 30 minutes unless otherwise noted.

(h) Surfaces of dummy components may not be painted except as specified in this subpart or in drawings subtended by this subpart.

BILLING CODE 4910–59–P

Appendix—Figures to Subpart W of Part 572

Figure W1

FRONTAL HEAD DROP TEST SET-UP SPECIFICATIONS

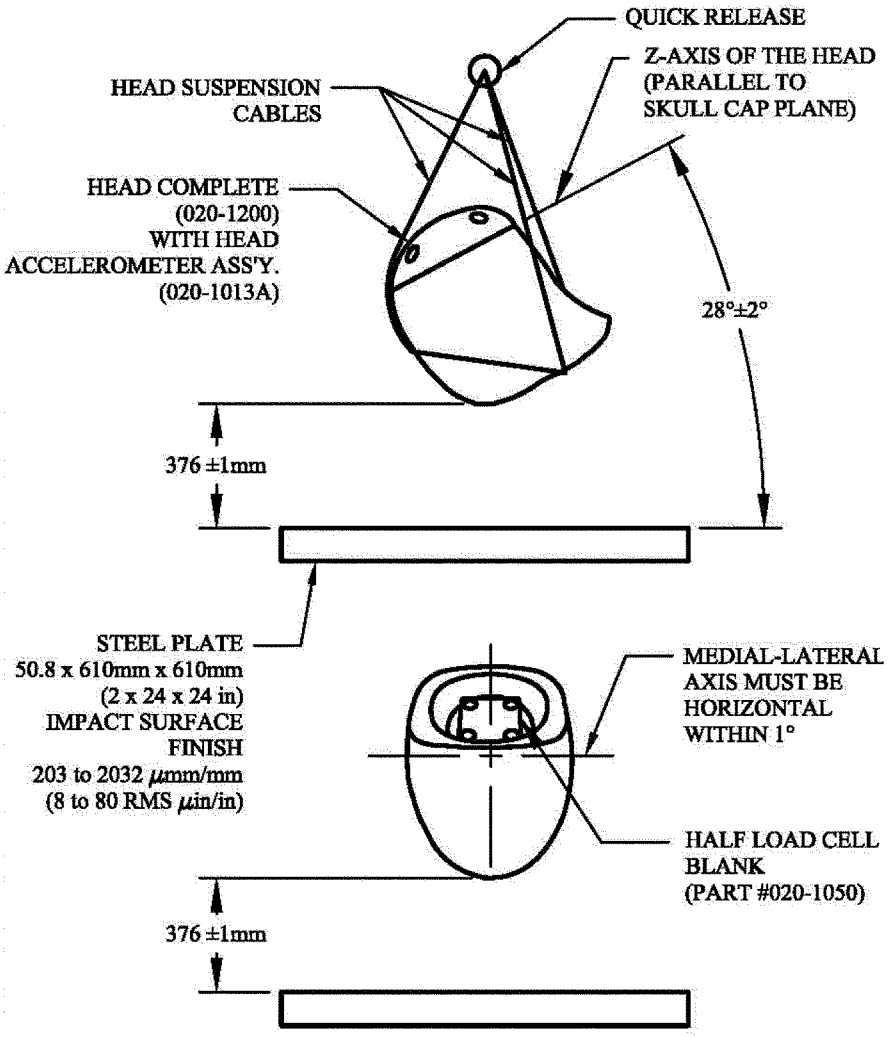

Figure W2

LATERAL HEAD DROP TEST SET-UP SPECIFICATIONS

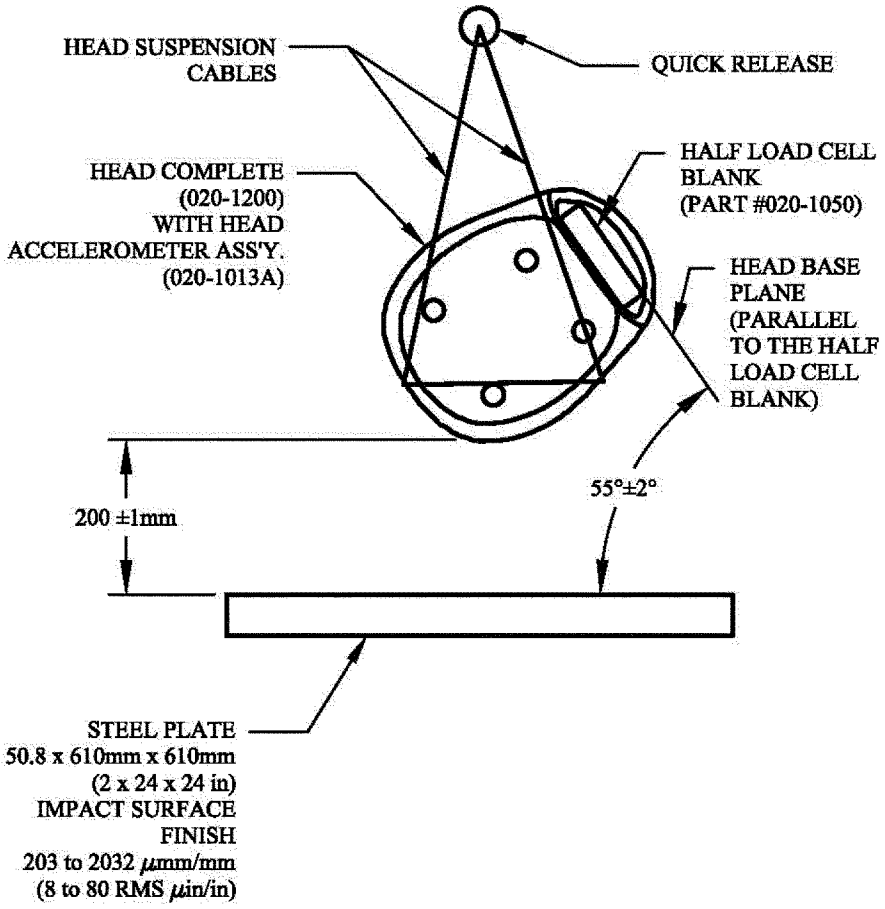

Figure W3

NECK FRONTAL FLEXION TEST SPECIFICATIONS

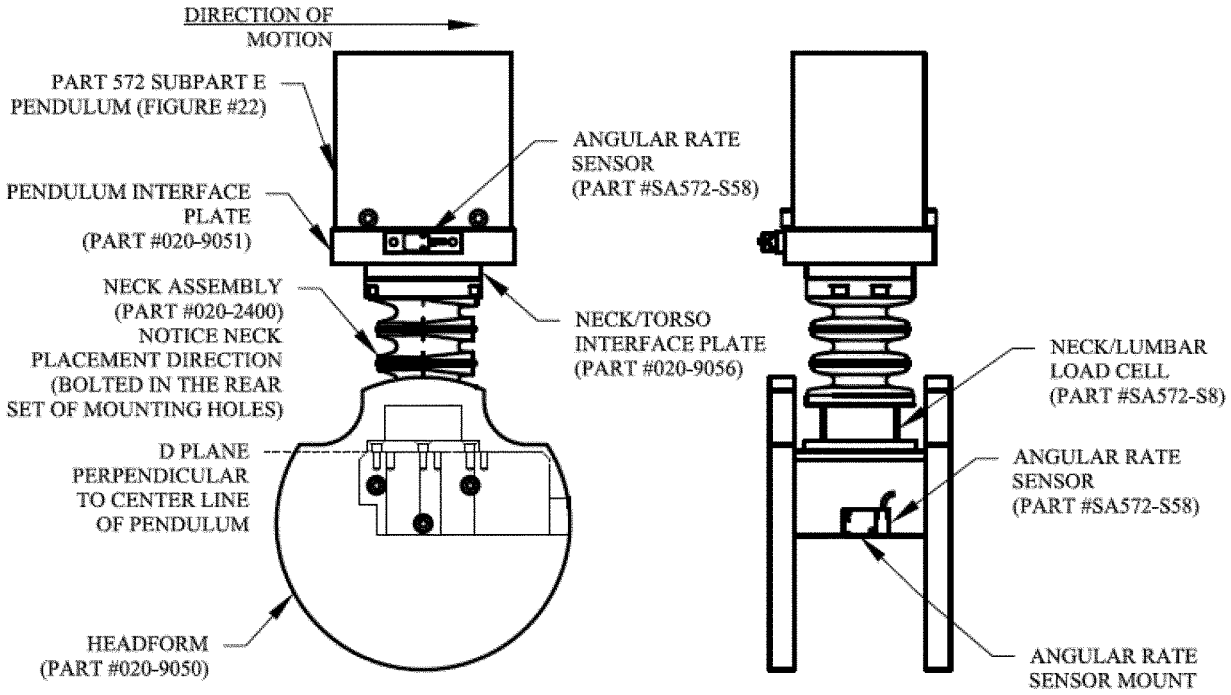

Figure W4

NECK LATERAL FLEXION TEST SPECIFICATIONS

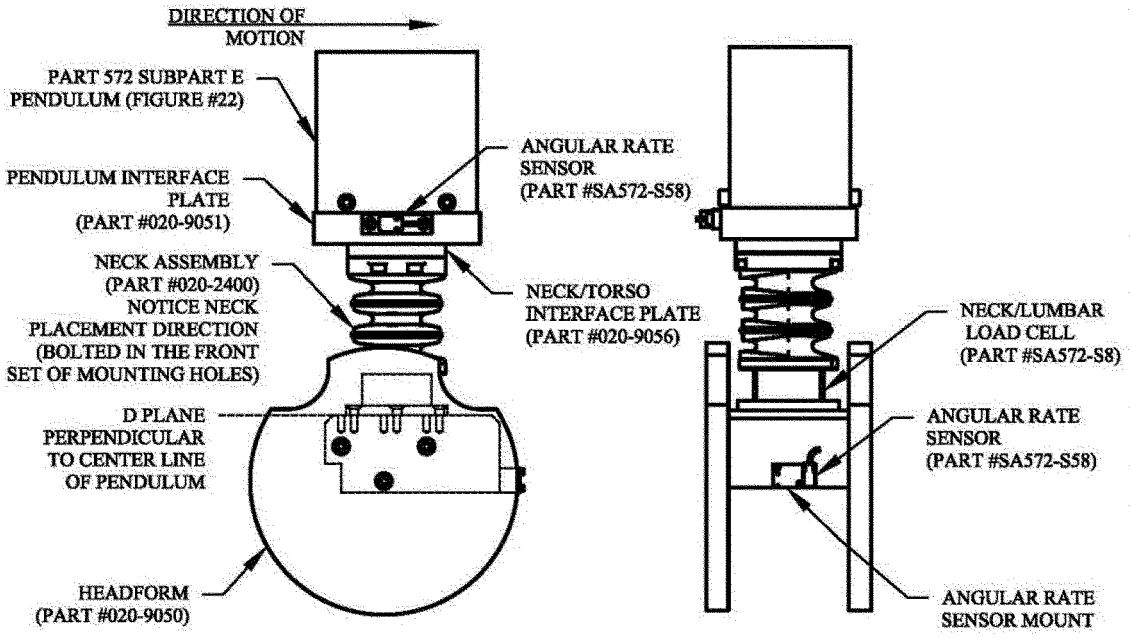

Figure W5

NECK TORSION TEST SPECIFICATIONS

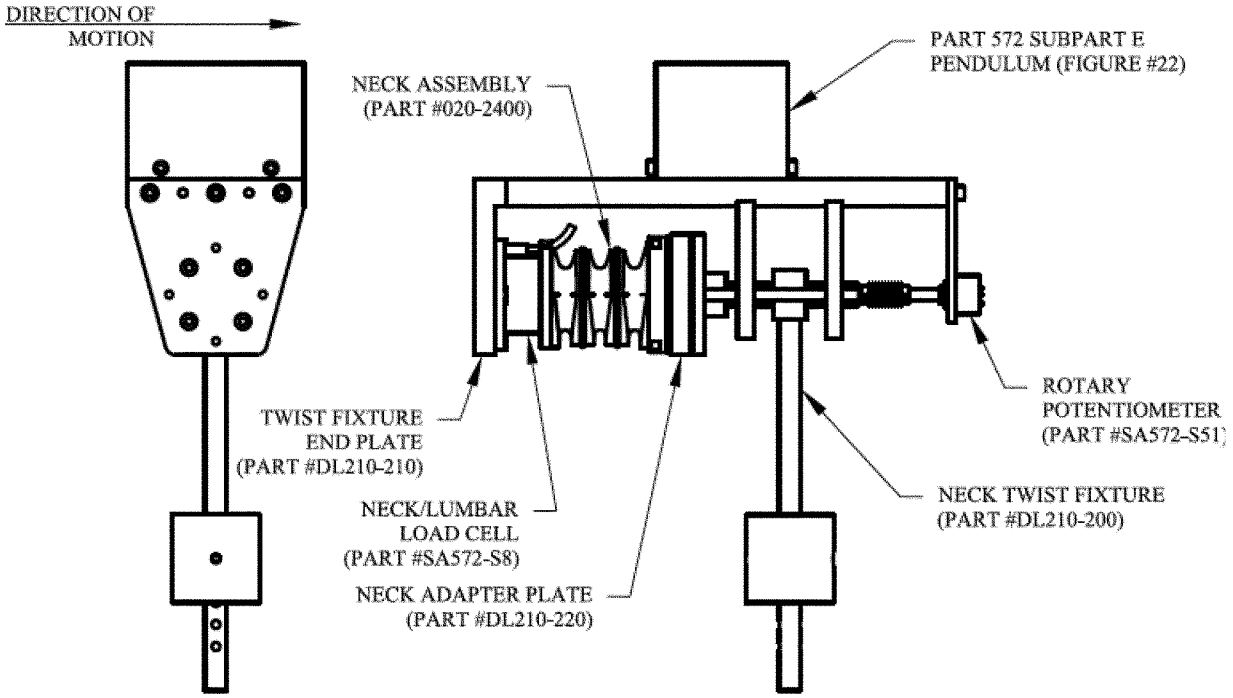

Figure W6

LATERAL SHOULDER IMPACT

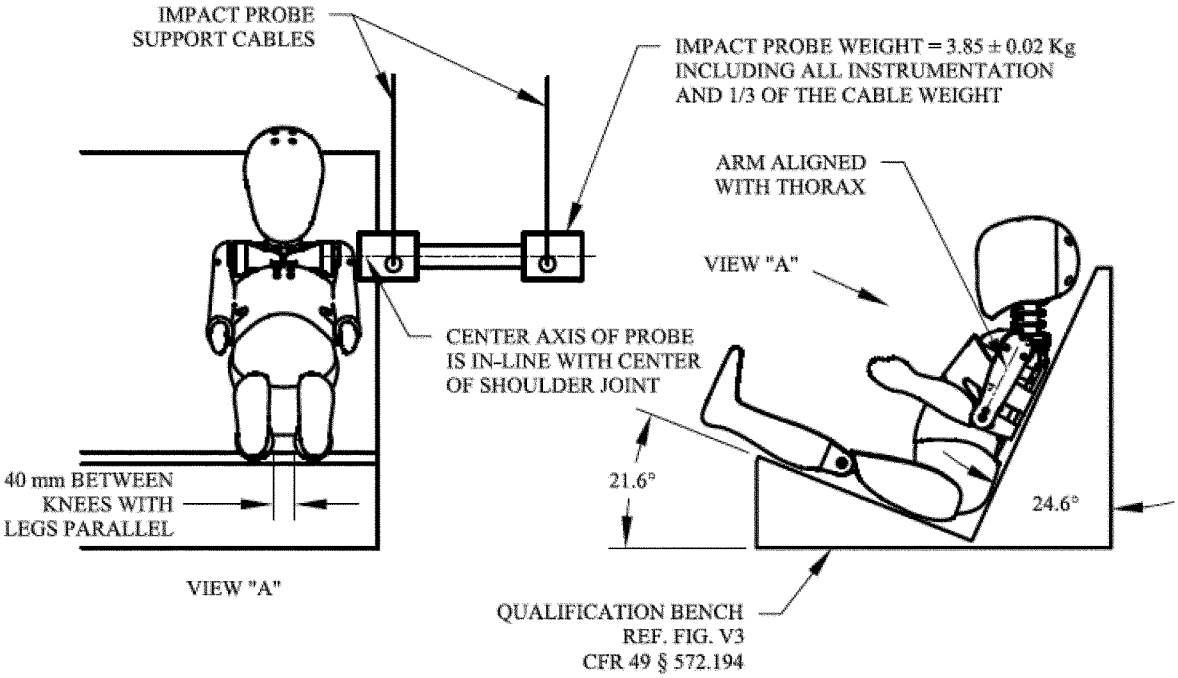

Figure W7

LATERAL THORAX IMPACT - WITH ARM

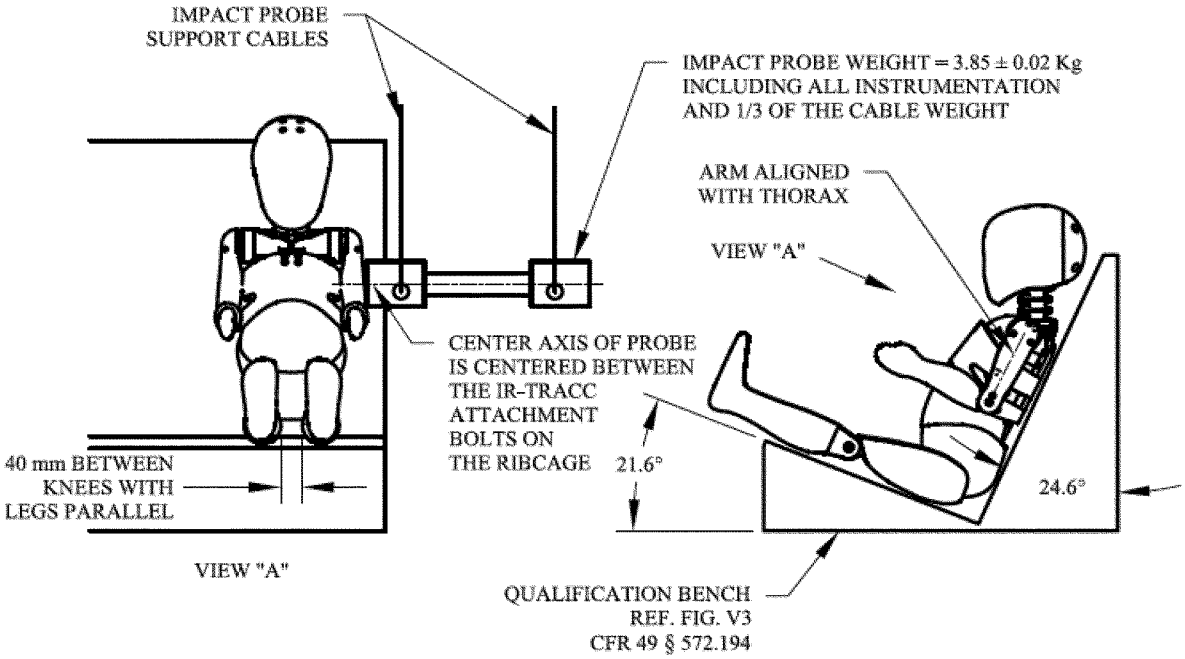

Figure W8

LATERAL THORAX IMPACT - WITHOUT ARM

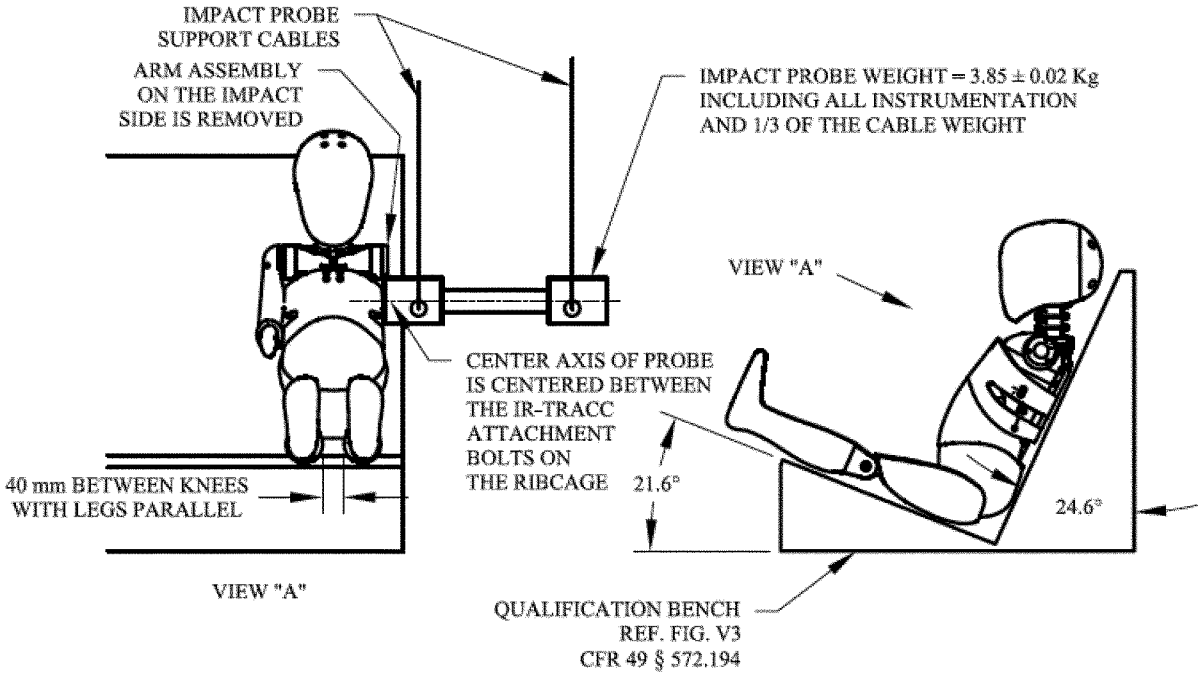

Figure W9

LUMBAR FRONTAL FLEXION TEST SPECIFICATIONS

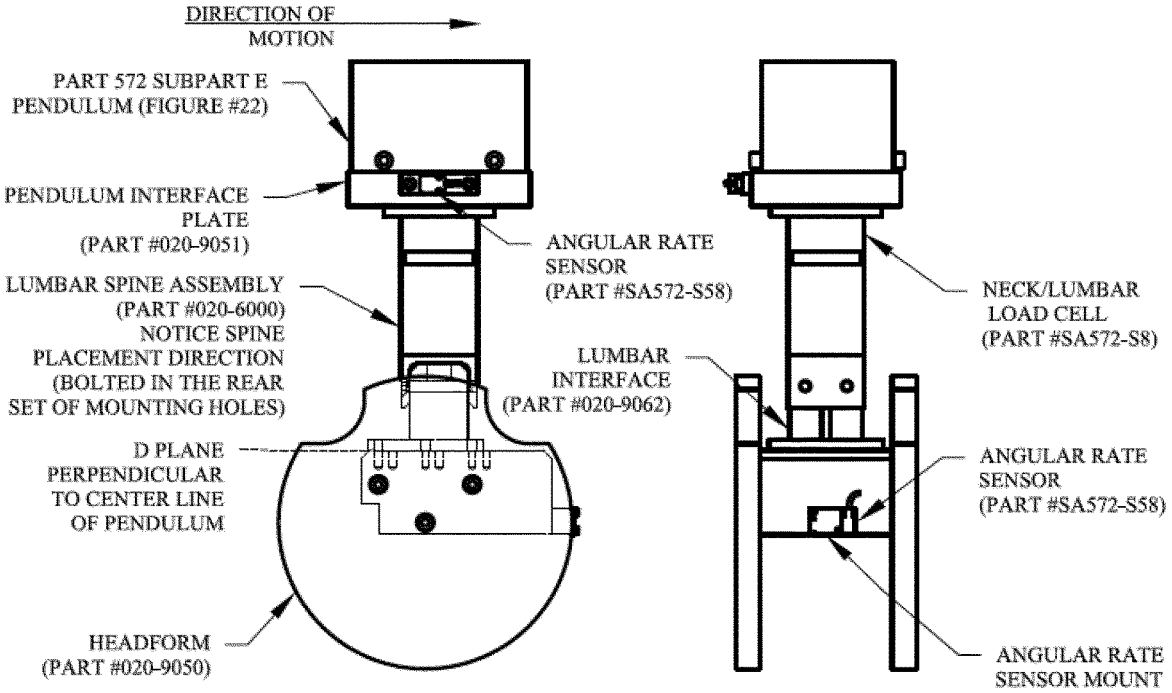

Figure W10

LUMBAR LATERAL FLEXION TEST SPECIFICATIONS

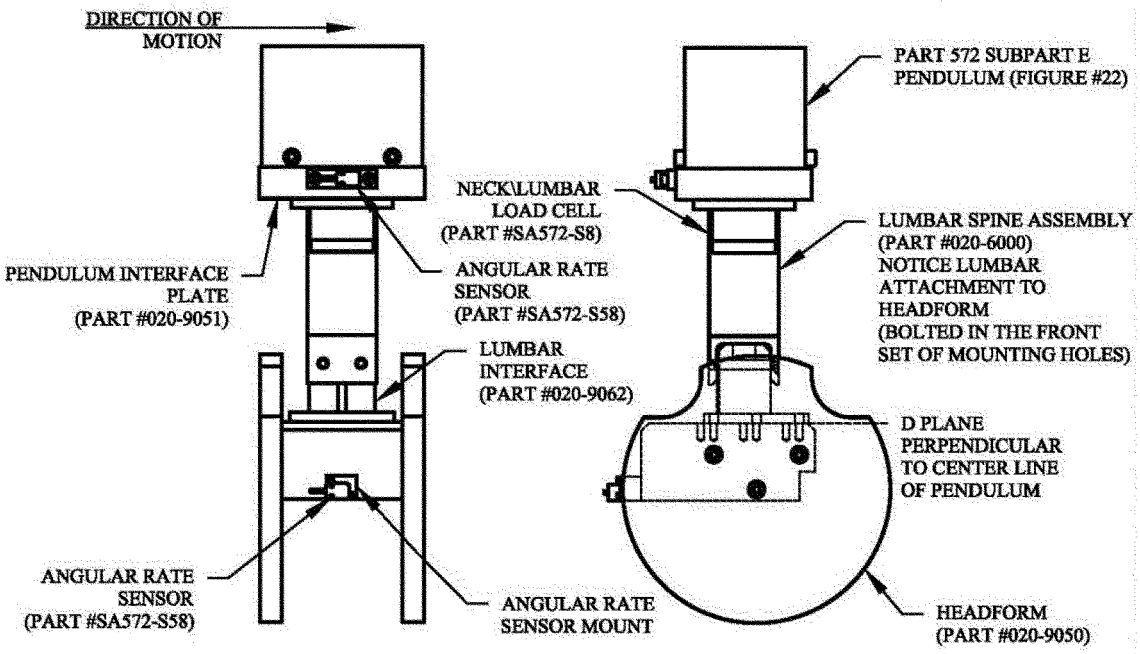

Figure W11
LATERAL PELVIS IMPACT

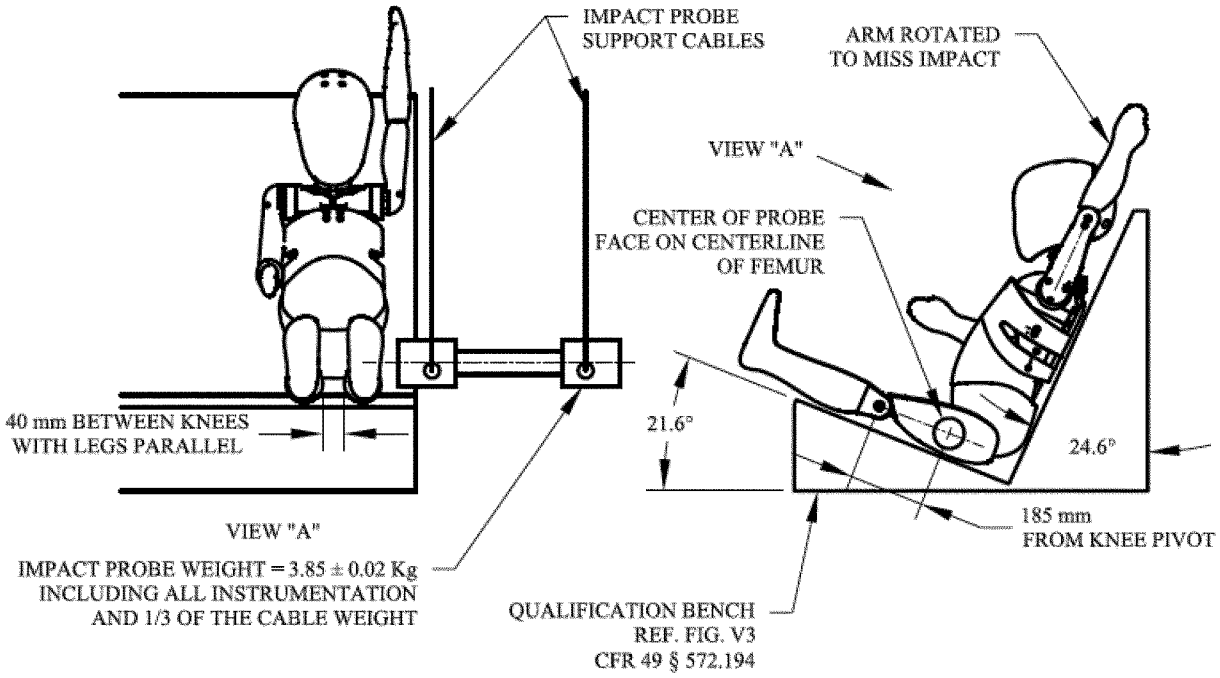

Issued on: November 8, 2013.

Christopher J. Bonanti,

Associate Administrator for Rulemaking.

[FR Doc. 2013–27438 Filed 11–20–13; 8:45 am]

BILLING CODE 4910–59–C